MITSUBISHI ELECTRIC

MELSEC WS series

Safety Controller Setting and Monitoring Tool Operating Manual

-WS0-CPU0
-WS0-CPU1
-WS0-CPU3
-SW1DNN-WS0ADR-B

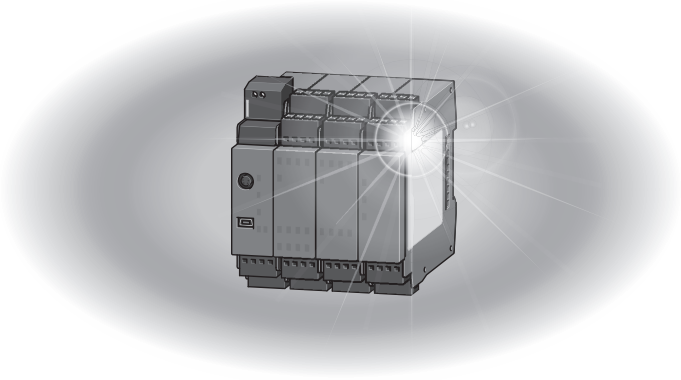

Powered by SICK

MELSEC-WS series products were jointly developed and manufactured by Mitsubishi and SICK AG, Industrial Safety Systems in Germany.

* Note that the warranty on MELSEC-WS series products differs from that on MELSEC-Q or MELSEC-QS series products. (Refer to "WARRANTY" written in this manual.)

This document is protected by the law of copyright, whereby all rights established therein remain with the company Mitsubishi Electric Corporation. Reproduction of this document or parts of this document is only permissible within the limits of the legal determination of Copyright Law. Alteration or abridgement of the document is not permitted without the explicit written approval of the company Mitsubishi Electric Corporation.

Precautions regarding warranty and specifications

MELSEC-WS series products are jointly developed and manufactured by Mitsubishi and SICK AG, Industrial Safety Systems, in Germany.
Note that there are some precautions regarding warranty and specifications of MELSEC-WS series products.

<Warranty>

- The gratis warranty term of the product shall be for one (1) year after the date of delivery or for eighteen (18) months after manufacturing, whichever is less.
- The onerous repair term after discontinuation of production shall be for four (4) years.
- Mitsubishi shall mainly replace the product that needs a repair.
- It may take some time to respond to the problem or repair the product depending on the condition and timing.

<Specifications>

- General specifications of the products differ.

	MELSEC-WS	MELSEC-Q	MELSEC-QS
Operating ambient temperature	-25 to 55°C*1	0 to 55°C	0 to 55°C
Operating ambient humidity	10 to 95%RH	5 to 95%RH	5 to 95%RH
Storage ambient temperature	-25 to 70°C	-25 to 75°C	-40 to 75°C
Storage ambient humidity	10 to 95%RH	5 to 95%RH	5 to 95%RH

*1 When the WS0-GCC100202 is included in the system, operating ambient temperature will be 0 to 55 °C.

- EMC standards that are applicable to the products differ.

	MELSEC-WS	MELSEC-Q, MELSEC-QS
EMC standards	EN61000-6-2, EN55011	EN61131-2

• SAFETY PRECAUTIONS •

(Read these precautions before using this product.)

Before using this product, please read this manual and the relevant manuals carefully and pay full attention to safety to handle the product correctly.
In this manual, the safety precautions are classified into two levels: "⚠WARNING" and "⚠CAUTION".

⚠WARNING	Indicates that incorrect handling may cause hazardous conditions, resulting in death or severe injury.
⚠CAUTION	Indicates that incorrect handling may cause hazardous conditions, resulting in minor or moderate injury or property damage.

Under some circumstances, failure to observe the precautions given under "⚠CAUTION" may lead to serious consequences.
Observe the precautions of both levels because they are important for personal and system safety.
Make sure that the end users read this manual and then keep the manual in a safe place for future reference.

[Design Precautions]

⚠WARNING

- When the MELSEC-WS safety controller detects a fault in the external power supply or itself, it turns off the outputs. Configure an external circuit so that the connected devices are powered off according to the output status (off) of the MELSEC-WS safety controller. Incorrect configuration may result in an accident.
- When a load current exceeding the rated current or an overcurrent caused by a load short-circuit flows for a long time, it may cause smoke and fire. To prevent this, configure an external safety circuit, such as a fuse.
- For safety relays, configure an external circuit using a device such as a fuse or breaker to protect a short-circuit current.
- When changing data and operating status, and modifying program of the running MELSEC-WS safety controller from the PC, configure a safety circuit in the sequence program or external to the MELSEC-WS safety controller to ensure that the entire system operates safely.
  Before operating the MELSEC-WS safety controller, read the relevant manuals carefully and determine the operating procedure so that the safety can be ensured.
  Furthermore, before performing online operations for the MELSEC-WS safety controller from the PC, determine corrective actions to be taken for communication errors caused by failure such as a poor contact.
- Create an interlock program using a reset button to prevent the MELSEC-WS safety controller from restarting automatically after the safety function is activated and the safety controller turns off the outputs.

⚠CAUTION

- Ensure that an entire system using the MELSEC-WS safety controller meets the requirements for the corresponding safety category.
- The life of safety relays in the safety relay output module depends on the switching condition and/or load. Configure a system satisfying the number of switching times of the safety relays in the module.
- Do not install the communication cables together with the main circuit lines or power cables. Keep a distance of 100 mm or more between them.
  Failure to do so may result in malfunction due to noise.
- If a mechanical switch such as a relay is connected to an input terminal of a safety I/O module, consider contact bounce.
- **Observe the protective notes and measures.**
  Observe the following items in order to ensure proper use of the MELSEC-WS safety controller.
  - When mounting, installing and using the MELSEC-WS safety controller, observe the standards and directives applicable in your country.
  - The national/international rules and regulations apply to the installation, use and periodic technical inspection of the MELSEC-WS safety controller, in particular.
    - Machinery Directive 2006/42/EC
    - EMC Directive 2004/108/EC
    - Provision and Use of Work Equipment Directive 89/655/EC
    - Low-Voltage Directive 2006/95/EC
    - The work safety regulations/safety rules
  - Manufacturers and owners of the machine on which a MELSEC-WS safety controller is used are responsible for obtaining and observing all applicable safety regulations and rules.
  - The notices, in particular the test notices of this manual (e.g. on use, mounting, installation or integration into the existing machine controller), must be observed.
  - The test must be carried out by specialised personnel or specially qualified and authorized personnel and must be recorded and documented and retraced at any time by third parties.
  - The external voltage supply of the device must be capable of buffering brief mains voltage failures of 20 ms as specified in EN 60204.
  - The modules of the MELSEC-WS safety controller conform to Class A, Group 1, in accordance with EN 55011. Group 1 encompasses all the ISM devices in which intentionally generated and/or used conductor-bound RF energy that is required for the inner function of the device itself occurs.
- **The MELSEC-WS safety controller fulfils the requirements of Class A (industrial applications) in accordance with the “Interference emission” basic specifications.**
  The MELSEC-WS safety controller is therefore only suitable for use in an industrial environment and not for private use.

[Security Precautions]

⚠WARNING

- To maintain the security (confidentiality, integrity, and availability) of the programmable controller and the system against unauthorized access, denial-of-service (DoS) attacks, computer viruses, and other cyberattacks from external devices via the network, take appropriate measures such as firewalls, virtual private networks (VPNs), and antivirus solutions.

[Installation Precautions]

⚠WARNING

- Do not use the MELSEC-WS safety controller in flammable gas atmosphere or explosive gas atmosphere. Doing so may result in a fire or explosion due to such as an arc caused by switching the relays.

⚠CAUTION

- Use the MELSEC-WS safety controller in an environment that meets the general specifications in this manual. Failure to do so may result in electric shock, fire, malfunction, or damage to or deterioration of the product.
- Latch the module onto the DIN mounting rail. Incorrect mounting may cause malfunction, failure or drop of the module.
- To ensure full electromagnetic compatibility (EMC), the DIN mounting rail has to be connected to functional earth (FE).
  Ensure that the earthling contact is positioned correctly. The earthling spring contact of the module must contact the DIN mounting rail securely to allow electrical conductivity.
- Shut off the external power supply for the system in all phases before mounting or removing the module.
  Failure to do so may result in damage to the product.
- Do not directly touch any conductive part of the module.
  Doing so can cause malfunction or failure of the module.
- The MELSEC-WS safety controller is only suitable for mounting in a control cabinet with at least IP 54 degree of protection.
  Failure to meet the installation method may cause the module to fail or malfunction due to the deposition of dust or the adhesion of water.

[Wiring Precautions]

⚠WARNING

- Shut off the external power supply for the system in all phases before wiring.
  Failure to do so may result in electric shock or damage to the product.
  The system could start up unexpectedly while you are connecting the devices.

⚠CAUTION

- Individually ground the GND wires of the MELSEC-WS safety controller with a ground resistance of 100 Ω or less.
  Failure to do so may result in electric shock or malfunction.
- Check the rated voltage and terminal layout before wiring to the module, and connect the cables correctly.
  Connecting a power supply with a different voltage rating or incorrect wiring may cause a fire or failure.
- Tighten the terminal screw within the specified torque range.
  Undertightening can cause short circuit, fire, or malfunction. Overtightening can damage the screw and/or module, resulting in drop, short circuit, or malfunction.
- Prevent foreign matter such as dust or wire chips from entering the module.
  Such foreign matter can cause a fire, failure, or malfunction.
- Mitsubishi MELSEC-WS safety controllers must be installed in control cabinets. Connect the main power supply to the MELSEC-WS safety controller through a relay terminal block.
  Wiring and replacement of an external power supply must be performed by maintenance personnel who is familiar with protection against electric shock. (For wiring methods, refer to Chapter 7.)
- Place the cables in a duct or clamp them.
  If not, dangling cable may swing or inadvertently be pulled, resulting in damage to the module or cables or malfunction due to poor contact.

[Startup and Maintenance Precautions]

⚠WARNING

- Do not touch any terminal while power is on.
  Doing so will cause electric shock.
- Shut off the external power supply for the system in all phases before cleaning the module or retightening the terminal screws. Failure to do so may result in electric shock.
  Tighten the terminal screw within the specified torque range. Undertightening can cause short circuit, fire, or malfunction.
  Overtightening can damage the screw and/or module, resulting in drop, short circuit, or malfunction.
- **Safety-oriented devices must be suitable for safety related signals.**
  A function interruption of safety outputs results in a loss of the safety functions so that the risk of serious injury exists.
  Do not connect any loads that exceed the rated values of the safety outputs.
  Wire the MELSEC-WS safety controller so that 24 V DC signals cannot unintentionally contact safety outputs.
  Connect the GND wires of the power supply to earth so that the devices do not switch on when the safety output line is applied to frame potential.
  Use suitable components or devices that fulfill all the applicable regulations and standards.
  Actuators at the outputs can be wired single-channeled. In order to maintain the respective Safety Integrity Level the lines have to be routed in such a manner that cross circuits to other live signals can be excluded, for example by routing them within protected areas such as in a control cabinet or in separate sheathed cables.

⚠CAUTION
• Before performing online operations (Force mode) for the running MELSEC-WS safety controller from the PC, read the relevant manuals carefully and ensure the safety. The online operations must be performed by qualified personnel, following the operating procedure determined at designing. Fully understand the precautions described in the Safety Controller Setting and Monitoring Tool Operating Manual before use. • Do not disassemble or modify the modules. Doing so may cause failure, malfunction, injury, or a fire. Mitsubishi does not warrant any products repaired or modified by persons other than Mitsubishi or FA Center authorized by Mitsubishi. • Shut off the external power supply for the MELSEC-WS safety controller in all phases before mounting or removing the module. Failure to do so may cause the module to fail or malfunction. • After the first use of the product, do not mount/remove the module from/to the DIN mounting rail, and the terminal block to/from the module more than 50 times (IEC 61131-2/JIS B 3502 compliant) respectively. Exceeding the limit of 50 times may cause malfunction. • Before handling the module, touch a grounded metal object to discharge the static electricity from the human body. Failure to do so may cause the module to fail or malfunction.

[Disposal Precautions]

⚠CAUTION
• When disposing of this product, treat it as industrial waste. Disposal of the product should always occur in accordance with the applicable country-specific waste-disposal regulations (e.g. European Waste Code 16 02 14).

• CONDITIONS OF USE FOR THE PRODUCT •

(1) Although Mitsubishi Electric has obtained the certification for Product's compliance to the international safety standards IEC61508, ISO13849-1 from TUV Rheinland, this fact does not guarantee that Product will be free from any malfunction or failure. The user of this Product shall comply with any and all applicable safety standard, regulation or law and take appropriate safety measures for the system in which the Product is installed or used and shall take the second or third safety measures other than the Product. Mitsubishi Electric is not liable for damages that could have been prevented by compliance with any applicable safety standard, regulation or law.

(2) Mitsubishi Electric prohibits the use of Products with or in any application involving, and Mitsubishi Electric shall not be liable for a default, a liability for defect warranty, a quality assurance, negligence or other tort and a product liability in these applications.
   (a) power plants,
   (b) trains, railway systems, airplanes, airline operations, other transportation systems,
   (c) hospitals, medical care, dialysis and life support facilities or equipment,
   (d) amusement equipments,
   (e) incineration and fuel devices,
   (f) handling of nuclear or hazardous materials or chemicals,
   (g) mining and drilling,
   (h) and other applications where the level of risk to human life, health or property are elevated.

(3) Mitsubishi Electric shall have no responsibility or liability for any problems involving programmable controller trouble and system trouble caused by DoS attacks, unauthorized access, computer viruses, and other cyberattacks.

REVISIONS

*The manual number is given on the bottom left of the back cover.

Revision date	*Manual number	Description
September, 2009	SH(NA)-080856ENG-A	First edition
March, 2010	SH(NA)-080856ENG-B	A new module, CC-Link interface module, was added.
July, 2011	SH(NA)-080856ENG-C	Description on Flexi Link system was added.
August, 2012	SH(NA)-080856ENG-D	Setting and Monitoring Tool was upgraded.
August, 2014	SH(NA)-080856ENG-E	A new module, WS0-CPU3 module, was added. Description on Flexi Line system was added. Setting and Monitoring Tool was upgraded.
August, 2016	SH(NA)-080856ENG-F	Description on the corporate logo was changed.
November, 2018	SH(NA)-080856ENG-G	Errors in writing are corrected.
September, 2019	SH(NA)-080856ENG-H	Additions to the notes for transferring the system configuration ware made.
January, 2020	SH(NA)-080856ENG-I	Setting and Monitoring Tool was upgraded.
May, 2023	SH(NA)-080856ENG-J	Errors in writing are corrected.
September, 2024	SH(NA)-080856ENG-K	Errors in writing are corrected.
September, 2025	SH(NA)-080856ENG-L	Setting and Monitoring Tool was upgraded.

Japanese manual version SH-080853-M

This manual confers no industrial property rights or any rights of any other kind, nor does it confer any patent licenses. Mitsubishi Electric Corporation cannot be held responsible for any problems involving industrial property rights which may occur as a result of using the contents noted in this manual.

© 2009 MITSUBISHI ELECTRIC CORPORATION

CONTENTS

SAFETY PRECAUTIONS 1
CONDITIONS OF USE FOR THE PRODUCT 7
REVISIONS 8
CONTENTS 9
GENERIC TERMS AND ABBREVIATIONS 15
1. About this document 16
1.1 Function of this document 16
1.2 Target group 17
1.3 Function and structure of this manual 18
1.3.1 Recommendations for familiarising yourself with Setting and Monitoring Tool 18
1.3.2 Recommendations for experienced users 18
1.4 Scope and version 18
1.5 Abbreviations used 19
1.6 Symbols and notations used 19
2. On safety 20
2.1 Qualified safety personnel 20
2.2 Correct use 20
2.3 General protective notes and protective measures 21
3. Version, compatibility and features 22
4. Installation and removal 24
4.1 System requirements 24
4.2 Installation and Update 24
4.3 Removal 25
4.4 Troubleshooting 25
5. The graphical user interface 26
5.1 Start view 26
5.2 Setting the desired language 26
5.3 Standard views 27
5.4 Positioning windows 28
5.5 Hardware configuration view 29
5.5.1 Exercise for configuring the MELSEC-WS modules 31
5.5.2 Module status bits in the Hardware configuration view 33
5.5.3 Exercise for configuring the connected devices 35
5.5.4 Safe and non-safe elements in the hardware configuration 36
5.5.5 Expanding elements 36
5.5.6 Parameterization of connected elements 37
5.5.7 Customized elements 39

5.5.8 Connection of SICK EFI-compatible devices 42
5.5.9 Export and import of a partial application 44
5.5.10 RS-232 routing 47
5.6 Logic editor view 52
5.6.1 Exercise for using the logic editor 53
5.6.2 Logic access levels 54
5.6.3 Validation of the configuration 56
5.6.4 Inputs and diagnostics bits of the main module in the logic editor 57
5.6.5 EFI I/O error status bits in the logic editor 58
5.6.6 Module input and output status bits in the logic editor 59
5.6.7 CPU markers 60
5.6.8 Jump addresses 61
5.6.9 I/O matrix 63
5.6.10 Tag name editor 65
5.6.11 Import and export tag names 66
5.7 Report view 67
5.8 Diagnostics view 68
5.9 Data recorder view 70
6. Connecting to the MELSEC-WS safety controller 72
6.1 First steps for establishing a connection 72
6.1.1 Connecting the PC to the MELSEC-WS safety controller via RS-232 72
6.1.2 Online status and background color 73
6.2 Editing the communication settings 74
6.3 Establishing a connection with the MELSEC-WS safety controller 80
6.4 User levels in the Setting and Monitoring Tool 81
6.5 Identify project 82
7. Flexi Link 83
7.1 Flexi Link overview 83
7.1.1 System requirements and restrictions for Flexi Link 83
7.2 Function principle 84
7.2.1 Flexi Link address 84
7.2.2 Flexi Link ID 84
7.3 Getting started 86
7.3.1 Connecting to an existing Flexi Link system 86
7.3.2 Setting up a Flexi Link project in the Setting and Monitoring Tool 89
7.3.3 Flexi Link configuration 90
7.3.4 Transferring and verifying the Flexi Link configuration 94
7.4 Flexi Link functions 97
7.4.1 Flexi Link system: System overview 98
7.4.2 Flexi Link system: Process image 100
7.4.3 Flexi Link system: Network settings 101

7.4.4 Flexi Link stations: Flexi Link data in the logic editor 102
7.4.5 Flexi Link stations: Station X view and process image 104
7.4.6 Flexi Link stations: Teach function 106
7.4.7 Flexi Link teaching status and diagnostics 108
7.5 Flexi Link troubleshooting 110
7.5.1 Flexi Link ID mismatch 110
8. Flexi Line 111
8.1 Flexi Line overview 111
8.1.1 System requirements and restrictions for Flexi Line 111
8.2 Principle of operation Flexi Line 112
8.2.1 Topology 112
8.2.2 Flexi Line configuration 112
8.2.3 Flexi Line checksum (CRC) 115
8.2.4 Flexi Line data in the logic editor 116
8.2.5 Teach function 117
8.2.6 Status and diagnostics 119
8.3 Getting started 120
8.3.1 Configuration and commissioning of a Flexi Line system 120
8.3.2 Conversion of a Flexi Line system 121
8.3.3 Configuration of the Flexi Line logic 122
9. Logic programming – Function blocks 124
9.1 General description 124
9.2 Safety notes for the logic programming 124
9.3 Function block Overview 126
9.4 Function block properties 127
9.5 Input and output signal connections of function blocks 128
9.5.1 Function block input connections 128
9.5.2 Inversion of input connections 128
9.5.3 Function block output connections 129
9.5.4 Fault present output 130
9.5.5 Execution order specification 130
9.6 Timer values and logic execution time 131
9.7 Logic function blocks 131
9.7.1 NOT 131
9.7.2 AND 132
9.7.3 OR 133
9.7.4 XOR (exclusive OR) 134
9.7.5 XNOR (exclusive NOR) 135
9.7.6 Multiple release 135
9.7.7 RS Flip-Flop 136
9.7.8 JK Flip-Flop 137

9.7.9 Multiple memory 138
9.7.10 Clock generator 139
9.7.11 Event counter (Up, Down and Up and down) 140
9.7.12 Fast shut off and Fast shut off with bypass 143
9.7.13 Edge detection 148
9.7.14 Binary encoder 149
9.7.15 Binary decoder 152
9.7.16 Log generator 155
9.7.17 Routing 1:N 157
9.7.18 Routing N:N 158
9.8 Application-specific function blocks 159
9.8.1 Reset 159
9.8.2 Restart 160
9.8.3 Off-delay timer 162
9.8.4 Adjustable off-delay timer 163
9.8.5 On-delay timer 164
9.8.6 Adjustable on-delay timer 165
9.8.7 EDM (External device monitoring) 166
9.8.8 Valve monitoring 167
9.8.9 User mode switch 171
9.8.10 Switch synchronization 173
9.8.11 Error output combination 176
9.8.12 Ramp down detection 177
9.8.13 Frequency monitor 182
9.8.14 Start warning 186
9.9 Function blocks for dual channel evaluation 191
9.9.1 Single-channel evaluation 191
9.9.2 Dual-channel evaluation (1 pair) and discrepancy time 192
9.9.3 Double dual-channel evaluation (2 pair synchronization evaluation) and synchronization time 194
9.9.4 Emergency stop 196
9.9.5 Magnetic switch 197
9.9.6 Light curtain monitoring 198
9.9.7 Safety gate monitoring 199
9.9.8 Tolerant dual channel monitor 201
9.9.9 Two-hand control type IIIA 206
9.9.10 Two-hand control type IIIC 206
9.9.11 Multi operator (multiple two-hand control) 209
9.10 Function blocks for Parallel muting, Sequential muting and Cross muting 211
9.10.1 Overview and general description 211

9.10.2 Parameters of the function blocks 214
9.10.3 Information on wiring 221
9.10.4 State transition from Stop to Run 222
9.10.5 Error states and information on resetting 222
9.10.6 Parallel muting 223
9.10.7 Sequential muting 225
9.10.8 Cross muting – direction of movement only forwards or backwards 227
9.10.9 Cross muting – material transport in both directions 229
9.11 Function blocks for press contact monitoring 231
9.11.1 Overview and general description 231
9.11.2 Eccentric press contact 231
9.11.3 Universal press contact 237
9.12 Function blocks for press cycle control 245
9.12.1 Press setup 245
9.12.2 Press single stroke 248
9.12.3 Press automatic 252
9.12.4 N-break (press with N-PSDI mode) 255
9.13 User defined function blocks 263
9.13.1 Grouped function block 263
9.13.2 Customized function block 267
9.14 Simulation of the configuration 270
9.15 Force mode 272
10. I/O modules 276
10.1 Dual channel evaluation and discrepancy time monitoring 276
10.2 ON-OFF filter and OFF-ON filter 278
10.3 Disabling the test pulses of WS0-XTIO outputs 278
11. Transferring the system configuration 279
11.1 Transferring project data to the safety controller 279
11.2 Compatibility check 279
11.3 Verification of the configuration 280
11.4 Activating the write protection of the configuration in the safety controller 283
11.5 Configuration checksums 283
11.6 Deletion of the configuration in the safety controller 283
12. Device states of the MELSEC-WS safety controller 284
12.1 Changing the device state 285
12.2 Behaviour on startup 285
12.3 Software reset of the CPU module 285
13. Technical commissioning 286
13.1 Wiring and voltage supply 286
13.2 Transferring the configuration 286

13.3 Technical test and commissioning 287
14. Troubleshooting 288
15. Annex 289
15.1 Example application reports 289
15.1.1 Example application Newspaper palletizer 289
15.1.2 Example application Wood scanner 304
15.1.3 Example application Ramp down detection 315
15.2 List of function block status in simulation mode 325
15.3 Precautions 325
15.4 SICK contact 326

GENERIC TERMS AND ABBREVIATIONS

Generic term/abbreviation	Description
WS0-MPL0	The abbreviation for the WS0-MPL000201 MELSEC-WS safety controller memory plug
WS0-MPL1	The abbreviation for the WS0-MPL100201 MELSEC-WS safety controller memory plug
WS0-CPU0	The abbreviation for the WS0-CPU000200 MELSEC-WS safety controller CPU module
WS0-CPU1	The abbreviation for the WS0-CPU130202 MELSEC-WS safety controller CPU module
WS0-CPU3	The abbreviation for the WS0-CPU 320202 MELSEC-WS safety controller CPU module
WS0-XTIO	The abbreviation for the WS0-XTIO84202 MELSEC-WS safety controller safety I/O combined module
WS0-XTDI	The abbreviation for the WS0-XTDI80202 MELSEC-WS safety controller safety input module
WS0-4RO	The abbreviation for the WS0-4RO4002 MELSEC-WS safety controller safety relay output module
WS0-GETH	The abbreviation for the WS0-GETH00200 MELSEC-WS safety controller Ethernet interface module
WS0-GCC1	The abbreviation for the WS0-GCC100202 MELSEC-WS safety controller CC-Link interface module
CPU module	A generic term for the WS0-CPU0, WS0-CPU1 and WS0-CPU3
Safety I/O module	A generic term for the WS0-XTIO and WS0-XTDI
Network module	A generic term for the WS0-GETH and WS0-GCC1

1 About this document

Please read this chapter carefully before working with this manual and the MELSEC-WS safety controller.

1.1 Function of this document

For the MELSEC-WS safety controller there are sets of manuals with clearly defined applications as well as user’s manuals (hardware) for each module.

- All MELSEC-WS modules and their functions are described in detail in “MELSEC-WS series Safety Controller User's manual”. Use the Safety Controller User's manual in particular for the planning of MELSEC-WS safety controllers.
  The Safety Controller User's manual is designed to address the technical personnel of the machine manufacturer or the machine operator in regards to safe mounting, electrical installation, commissioning, operation and maintenance of the MELSEC-WS safety controller.
  The Safety Controller User's manual does not provide instructions for operating machines on which the safety controller is, or will be, integrated. Information on this is to be found in the operating instructions of the machine.
- The software-based configuration and setting the parameters for the MELSEC-WS safety controller are described in “MELSEC-WS series Safety Controller Setting and Monitoring Tool Operating Manual". The operating manual also contain a description of the diagnostic functions most important for operation and detailed information on the identification and rectification of errors. Use the operating manual in particular for the configuration, commissioning and operation of MELSEC-WS safety controllers.
- MELSEC-WS network interface modules and their functions are described in detail in the user's manuals for each network interface module. The network interface module interface manuals are designed to address the technical personnel of the machine manufacturer or the machine operator in regards to safe mounting, electrical installation, commissioning as well as on maintenance of the MELSEC-WS network interface modules. The network interface module user's manuals also contain important information on the configuration of the network interface module using the software Setting and Monitoring Tool, on the exchange of data with networks as well as information on the status, the planning and the related mapping.
- The user’s manuals (hardware) are included with each MELSEC-WS module. They provide basic technical specifications on the modules and contain simple mounting instructions. Use the user’s manuals (hardware) when mounting the MELSEC-WS safety controller.

The following shows the relevant manuals.

Table 1: Overview of the MELSEC-WS manuals

Title	Number
Safety Controller User’s Manual	WS-CPU-U-E
Safety Controller Ethernet Interface Module User’s Manual	WS-ET-U-E
Safety Controller CC-Link Interface Module User’s Manual	WS-CC-U-E
Safety Controller Setting and Monitoring Tool Operating Manual	SW1DNN-WS0ADR-B-O-E
Safety Controller CPU Module User's Manual (Hardware)	WS-CPU-U-HW-E
Safety Controller Safety I/O Module User's Manual (Hardware)	WS-IO-U-HW-E
Safety Controller Safety Relay Output Module User's Manual (Hardware)	WS-SR-U-HW-E
Safety Controller Ethernet Interface Module User's Manual (Hardware)	WS-ET-U-HW-E
Safety Controller CC-Link Interface Module User's Manual (Hardware)	WS-CC-U-HW

1.2 Target group

These user's manuals are addressed to the planning engineers, designers and operators of systems which are to be protected by a MELSEC-WS safety controller. They also are addressed to people who integrate the MELSEC-WS safety controller into a machine, commission it initially or who are in charge of servicing and maintaining the unit.

These user's manuals do not provide instructions for operating the machine or system in which a MELSEC-WS safety controller is integrated. Information of this kind will be found in the operating instructions for the machine or system.

1.3 Function and structure of this manual

This manual instructs the technical personnel of the machine manufacturer or machine operator in the software configuration, operation and diagnostics of a MELSEC-WS safety controller using the Setting and Monitoring Tool. It only applies in combination with the Safety Controller User's Manual.

Planning and using SICK protective devices also require specific technical skills which are not detailed in this documentation.

Chapter 2 contains fundamental safety instructions. These instructions must be read.

When operating the MELSEC-WS modular safety controller, the national, local and statutory rules and regulations must be observed.

Note For the acquisition of Setting and Monitoring Tool, please contact your local Mitsubishi representative.

The SICK EFI-compatible devices are the products of SICK.

For details of the SICK products, please contact your local SICK representative (see Section 15.4).

www.sick.com

1.3.1 Recommendations for familiarising yourself with Setting and Monitoring Tool

We recommend the following procedure for users who want to familiarize themselves with Setting and Monitoring Tool for the first time:

- Read Chapter 5 to familiarize yourself with the graphical user interface and do the exercises for the configuration of example applications.

1.3.2 Recommendations for experienced users

We recommend the following procedure for experienced users who have already worked with Setting and Monitoring Tool:

- Familiarize yourself with the most recent version of the software by reading Section 1.4.
- The table of contents lists all functions provided by the Setting and Monitoring Tool. Use the table of contents to obtain information about the basic functions.

1.4 Scope and version

These user's manuals are original manuals.

These user's manuals apply for the Setting and Monitoring Tool software version V1.2.0 or higher, CPU0 and CPU1 with firmware version V1.11 or higher, and CPU3 with firmware version V3.02 or higher.

This version of the user's manuals describes version V1.9.8 of the Setting and Monitoring Tool software.

1.5 Abbreviations used

EDM External device monitoring

EFI Enhanced function interface

ESPE Electro-sensitive protective equipment (e.g. C4000)

OSSD Output signal switching device

Rev Revolutions (1 Rev = 360°)

1.6 Symbols and notations used

Recommendation Recommendations are designed to give you some assistance in your decision-making process with respect to a certain function or a technical measure.

Note Note provides special information on a device or a software function.

Action Instructions for taking action are shown by an arrow. Read carefully and follow the instructions for action.



ATTENTION!

An “ATTENTION” indicates concrete or potential dangers. It is intended to protect you from harm and help avoid damage to devices and systems.

Read warnings carefully and follow them!

Otherwise the safety function may be impaired and a dangerous state may occur.

Menus and commands The names of software menus, submenus, options and commands, selection boxes and windows are highlighted in **bold**. Example: Click **Edit** in the **File** menu.

The term “dangerous state”

The dangerous state (standard term) of the machine is always shown in the drawings and diagrams of this document as the movement of a machine part. In practical operation, there may be a number of different dangerous states:

- machine movements
- electrical conductors
- visible or invisible radiation
- a combination of several risks and hazards

Key Keys are shown in uppercase.

Keys to be pressed sequentially are hyphenated with “-”.

Example: “CTRL+ALT+DEL” indicates to press these keys simultaneously. “F12-2” indicates to press these keys sequentially. The key names are based on the standard keyboard. Some users may use a keyboard with a different language layout such as German.

2 On safety

This chapter deals with your own safety and the safety of the equipment operators.

➢ Please read this chapter carefully before working with a MELSEC-WS safety controller.

2.1 Qualified safety personnel

The MELSEC-WS safety controller must be installed, configured, commissioned and serviced only by qualified safety personnel. Qualified safety personnel are defined as persons who

- have undergone the appropriate technical training

and

- have been instructed by the responsible machine operator in the operation of the machine and the current valid safety guidelines

and

- are sufficiently familiar with the applicable official health and work safety regulations, directives and generally recognized engineering practice (e.g. DIN standards, VDE stipulations, engineering regulations from other EC member states) that they can assess the work safety aspects of the power-driven equipment

and

- have access to the MELSEC-WS manuals and have and read and familiarised themselves with them

and

- have access to the operating instructions for the protective devices (e.g. C4000) connected to the safety controller and have read and familiarised themselves with them.

2.2 Correct use

The Setting and Monitoring Tool is used to configure a MELSEC-WS safety controller consisting of modules of the safety controller.

The MELSEC-WS safety controller may only be used by qualified safety personnel and only at the machine at which it was mounted and initially commissioned by qualified safety personnel in accordance with the MELSEC-WS manuals.

ATTENTION

Mitsubishi Electric Corporation accepts no claims for liability if the software or the devices are used in any other way or if modifications are made to the software or the devices - even in the context of mounting and installation.

- Observe the safety instructions and protective measures of the Safety Controller User's Manual and this manual!
- When implementing a safety-relevant functional logic, ensure that the regulations of the national and international rules and standards are observed, in particular the controlling strategies and the measures for risk minimisation that are mandatory for your application.

2.3 General protective notes and protective measures

Observe the protective notes and measures!

Please observe the following items in order to ensure proper use of the MELSEC-WS safety controller.

Note

- When mounting, installing and using the MELSEC-WS safety controller, observe the standards and directives applicable in your country.
- The national and international rules and regulations apply to the installation and use as well as commissioning and periodic technical inspection of the MELSEC-WS safety controller, in particular:
  - Machinery Directive 2006/42/EC,
  - EMC Directive 2004/108/EC,
  - Provision and Use of Work Equipment Directive 2009/104/EC and the supplementary Directive 35/63/EC,
  - Low-Voltage Directive 2006/95/EC,
  - Work safety regulations and safety rules.
- Manufacturers and owners of the machine on which a MELSEC-WS safety controller is used are responsible for obtaining and observing all applicable safety regulations and rules.

3 Version, compatibility and features

For the MELSEC-WS series several firmware versions and function packages exist that allow different functions. This chapter gives an overview which firmware version, which function package and/or which version of the Setting and Monitoring Tool is required to use a certain function or device.

Table 2:
Required firmware and software versions

	Minimum required version		
Feature	**WS0-CPU**	**WS0-XTIO/ WS0-XTDI**	**Setting and Monitoring Tool**
Logic offline simulation	–[*1]	–	V1.2.0
Logic import/export	–	–	V1.3.0
Online edit	–	–	V1.3.0
Automatic wiring diagrams	–	–	V1.3.0
Central tag name editor	–	–	V1.3.0
Flexi Link (only with WS0-CPU1/WS0-CPU3)	V2.01 (Revision 2.xx)	–	V1.3.0
Flexi Line (only with WS0-CPU3)	V3.02 (Revision 3.xx)	–	V1.7.0
Function block documentation within the Setting and Monitoring Tool	–	–	V1.3.0
Input/output relation matrix	–	–	V1.3.0
Invertable inputs for the AND, OR, RS Flip-Flop and Routing N:N function blocks	V2.01 (Revision 2.xx)	–	V1.3.0
Ramp down detection function block	V1.11 (Revision 1.xx)	–	V1.3.0
Adjustable on-delay timer and adjustable off-delay timer function blocks	V2.01 (Revision 2.xx)	–	V1.3.0
Fast Shut Off with Bypass function block (only with WS0-XTI0)	V2.01 (Revision 2.xx)	V2.00 (Revision 2.xx)	V1.7.0
Deactivation of test pulses on Q1–Q4 on the WS0-XTIO possible	–	V2.00 (Revision 2.xx)	V1.3.0
Verification without identical hardware possible	V2.01 (Revision 2.xx)	–	V1.3.0
Status input data and Status output data in logic	V2.01 (Revision 2.xx)	V2.00 (Revision 2.xx)	V1.3.0
Data recorder	V2.01 (Revision 2.xx)[*3]	–	V1.7.0
Extended cross-circuit detection time for switching loads with high capacitance	–	V3.10 (Revision 3.xx)	V1.7.0

Device	WS0-CPU	WS0-XTIO/ WS0-XTDI	Setting and Monitoring Tool
Adjustable filter time for ON-OFF filter and OFF-ON filter on the inputs I1 to I8 of the WS0-XTIO/WS0-XTDI	–	V3.10 (Revision 3.xx)	V1.7.0
Ethernet interface module	V1.11 (Revision 1.xx)	–	V1.2.0
CC-Link interface module	V1.11 (Revision 1.xx)	–	V1.2.1
ROHS conformity WS0-XTIO	–	V1.01*2	–

*1 "–" means "any" or "not applicable".

*2 All other modules from product launch onwards.

*3 The trigger setting for the data recorder is available for the CPU with V3.02 or later.

Note

- You can find the firmware version on the type label of the MELSEC-WS modules in the field Firmware version.
- In order to use modules with a newer firmware version, a new Setting and Monitoring Tool version is required. For CPU0/1 ≥ V2.01 and XTIO/XTDI ≥ V2.00 Setting and Monitoring Tool V1.3.0 or higher is required. This has to be considered when devices are to be replaced in existing systems.
- You will find the firmware version of the MELSEC-WS modules in the hardware configuration view of the Setting and Monitoring Tool when the system is online or in the report if the system has been online before.
- The version of the Setting and Monitoring Tool can be found in **About** in the **Help** menu.
- For the acquisition of the newest version of the Setting and Monitoring Tool, please contact your local Mitsubishi representative.
- The function package (Revision 1.xx or Revision 2.xx) must be selected in the Setting and Monitoring Tool hardware configuration. Function package Revision 2.xx is available with Setting and Monitoring Tool 1.3.0 and higher.
- In order to use function package Revision 2.xx, the respective module must have at least firmware version V2.00.0. Otherwise you will receive an error message when you try to upload a configuration using Revision 2.xx to a module with a lower firmware version.
- Newer modules are downward compatible so that any module can be replaced by a module with a higher firmware version.
- The same firmware version and function package revision as those of the module used must be set to the new project after a project stored in the memory plug is modified.
- You will find the device's date of manufacture at the bottom of the type label in the format yywwnnnn (yy = year, ww = calendar week, nnnn = continuos serial number in the calendar week).

4 Installation and removal

4.1 System requirements

Recommended system configuration:

- Windows® 11
- Microsoft® .NET Framework 3.5 SP1, Microsoft .NET Framework 4.6.2
- 1 GHz processor
- 2 GB RAM
- 1024 × 768 pixel screen resolution
- 400 MB free hard disk memory

Note Setting and Monitoring Tool is a .NET Framework application. It requires .NET Framework.

Information on the current .NET Framework versions, supported operating systems, and Regional and Language Options settings is available on the Internet at

www.microsoft.com

Microsoft .NET Framework and any other components that may be needed can also be downloaded from www.microsoft.com/downloads.

Note Use a standard user account or higher in Windows 11.

To display text of Setting and Monitoring Tool in Chinese, use Chinese version of Windows operating systems.

4.2 Installation and Update

For the acquisition of Setting and Monitoring Tool (including information for installation), please contact your local Mitsubishi representative.

➢ Start the installation by running the setup.exe file and then follow the further instruction.

New software versions may contain new functions and support new MELSEC-WS modules. The version of the Setting and Monitoring Tool can be found in **About** in the **Help** menu.

Remove the old software version before installing a new one. The working directory in which the project data are stored is not overwritten during the new installation and is retained. When an RS232-USB converter (WS0-UC-232A) is used, install a driver from the CD ROM provided with the converter.

When an RS232-USB configuration cable (WS0-C20M8U) is used, please contact your local Mitsubishi representative for a driver of the cable.

4.3 Removal

The Setting and Monitoring Tool can be removed as follows:

- In the Windows Start menu, start **Uninstall Setting and Monitoring Tool** in the Setting and Monitoring Tool program folder.

4.4 Troubleshooting

Table 3:
Errors and error elimination

Error/Error message	Cause	Rectification
When Setting and Monitoring Tool is started, the following or a similar error message is displayed: “DLL not found – the Dynamic Link Library mscoree.dll was not found in the specified path. Specify the registration key HKLM\Software\Microsoft\ NETFramework\InstallRoot so that it refers to the installation location of the .NET Framework.”	Microsoft .NET Framework is not installed on the PC.	Install a suitable version of Microsoft .NET Framework. Ask your system administrator if appropriate. .NET Framework is available for downloading on the internet pages of Microsoft. **Note:** For a suitable version of Microsoft .NET Framework, refer to Section 4.1.

5 The graphical user interface

Note This chapter familiarizes you with the basic elements of the graphical user interface as an introduction. This chapter does not give any information on the configuration of MELSEC-WS modules nor any instructions for logic programming. This chapter is only intended to explain the fundamental functioning of the Setting and Monitoring Tool on the basis of a small section of the functions. Experienced users of Setting and Monitoring Tool can skip this chapter.

5.1 Start view

After the Setting and Monitoring Tool has been started, the start view is displayed. The user can specify here with which of the following actions he wants to start:

- Open existing project file
- Connect to physical device
- Create new project
- Create new Flexi Link project
- Edit com. Interface settings

Figure 1:
Start view with selection of the action

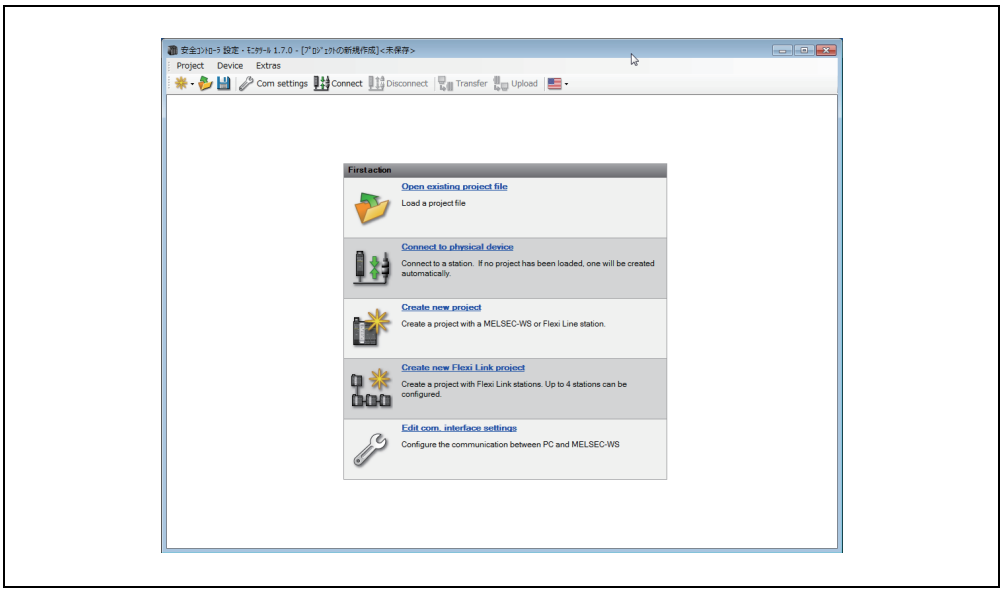

ATTENTION Files created with version V1.9.8 or later of the Setting and Monitoring Tool software cannot be opened with V1.9.1 or earlier.

5.2 Setting the desired language

➢ Click the flag icon in the menu bar at the far right and select the desired language version.

5.3 Standard views

The Setting and Monitoring Tool has the following views that can be accessed via buttons below the menu bar.

Figure 2:
The view can be selected below the menu bar

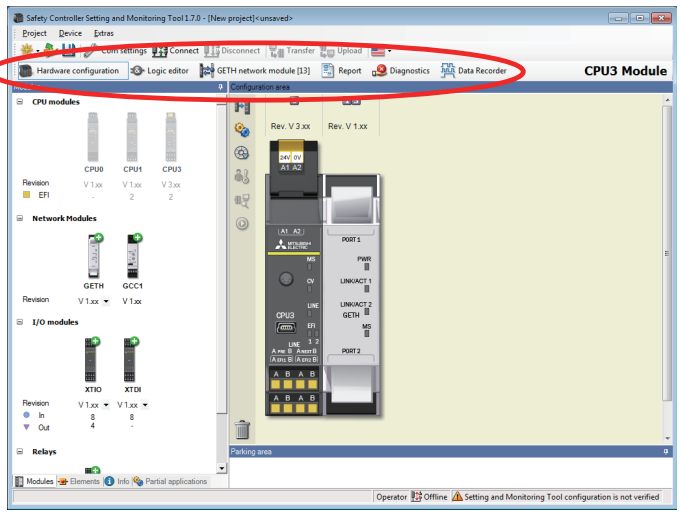

- The structure of a MELSEC-WS safety controller consisting of various hardware modules as well as the configuration of the inputs and outputs and the connected elements are specified in the **Hardware configuration** view.
- The function logic can be configured by means of logic function blocks and application-specific function blocks in the **Logic editor** view. This view is not available unless a CPU module has been selected beforehand in the hardware configuration.
- If the project contains at least one network module or if RS-232 communication is enabled, the **Network module [13]** view is available. Here you can configure the network module and the data that are transferred to and from the network.

Note Do not save the project data while Setting and Monitoring Tool is connected to the MELSEC-WS safety controller.

Before saving the project data, disconnect the PC from the MELSEC-WS safety controller.

- Complete information on the currently loaded project and all settings including the logic programming and wiring diagrams is available in the **Report** view. Furthermore, additional information on the project can be entered here. All information can be saved in standard file formats and printed out. The scope of the report can be compiled individually depending on the selection.
- The stored error messages are displayed as a history of a connected MELSEC-WS safety controller in the **Diagnostics** view.
- Input and output signals from a MELSEC-WS safety controller can be recorded and displayed inthe **Data recorder** view.

5.4 Positioning windows

Every view consists of several sub-windows that can be positioned freely. You can

- change the height, width and position of each sub-window by using the mouse to move the frame or title bar of the sub-window,
- convert a sub-window into a flyout window by clicking the “Hide” button (drawing pin symbol) on the right in the title bar. The flyout is then positioned on the left-hand margin of the Setting and Monitoring Tool window,
- move flyout windows back to their normal position by clicking the drawing pin icon in the flyout window again.

Figure 3:
Sub-windows can be converted to flyout menus

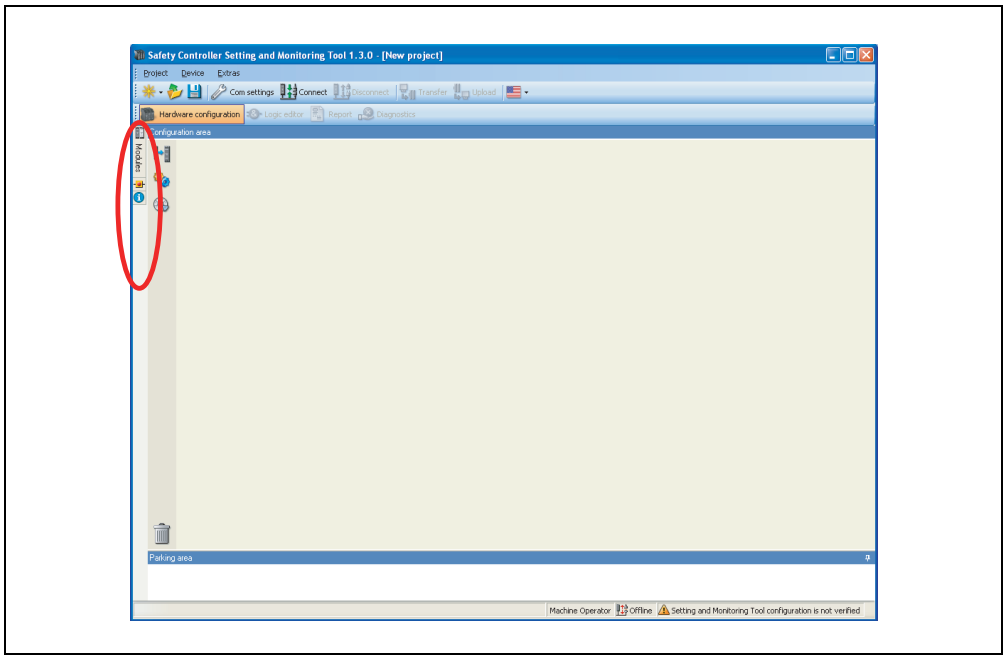

5.5 Hardware configuration view

The **Hardware configuration** window consists of the following sub-windows:

- Tabs for switching between the **Hardware configuration**, **Logic editor**, **Network modules** (if the project contains at least one network interface module), **Report**, **Diagnostics** and **Data Recoder** view.
- Menu bar with the menus **Project, Device, Extras**
- Toolbar with icons for rapid access to menus that are often used
- **Elements** selection window: All devices (e.g. sensors, actuators etc.) that can be connected to a MELSEC-WS safety controller are listed here. The devices can be parameterized and renamed. In addition, user-defined devices can be created and stored. In addition to the elements, EFI elements can also be connected. They are dragged to the two EFI interfaces of the CPU module, provided that the CPU module provides EFI interfaces.
- **Partial applications** selection window (see section 5.5.9).
- **Parking area**: The user can compile a selection of devices for a concrete application and store them temporarily here.
- **Modules** selection window: All MELSEC-WS modules that can be combined into a MELSEC-WS safety controller are listed here. The modules that cannot be selected at the current configuration are grayed out. Modules that can be added to the current configuration are identified by a green “+” symbol. The number of inputs, outputs and EFI connections is displayed for each module.
  From a drop down list under the module, the Revision (or function package) for the respective module can be selected. The function package chosen defines the minimum firmware version that must be used: Revision 2.XX requires at least firmware version 2.00. See also Chapter 3.
- **Configuration area**: The entire hardware configuration of the MELSEC-WS safety controller and of the connected devices is created here and represented graphically. The individual modules and connected devices can be named, have a tag name assigned and can be parameterized using the context menu of the devices. Additionally, it is possible to export or import a configuration (hardware configuration and logic) and – if the Setting and Monitoring Tool is connected to the system – to change the password or to perform a software reset of the system via the context menu of the CPU module.

Icons for the following functions are located on the left next to the positioned modules. From top: **Switch view**, **Settings** and **Edit tag names**. When a connection to a Flexi Link station is established, further functions are also available: **Log in** (change the user group), **Verify** (read in and compare the configuration) and **Run** or **Stop** the CPU module.

Figure 4:
The “Hardware configuration” view

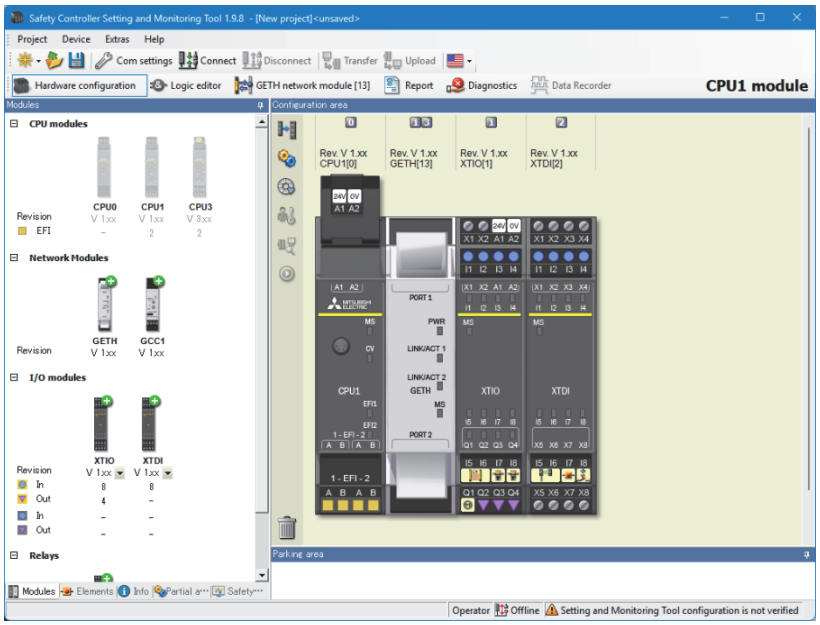

Note

- A double click on the CPU module in the configuration area will open the logic editor.
- A double click on any network module in the configuration area will open the network module configuration view for the respective network module.

Switch view

Figure 5:
Switch view button



The **Switch view** button toggles between an enlarged and a reduced view of the configuration area.

Settings

Figure 6:
Settings button



The **Settings** button opens a dialog where you can adjust the settings for your project. Here you can …

- create your own tag name format,
- enable or disable customized elements (see Section 5.5.7),
- enable or disable the import of customized function blocks,
- enable or disable RS-232 routing for the CPU,
- enable additional XT modules (see Section 5.5.1),
- save the current view and/or activate a saved view.
- change the path for the folders where user defined elements are saved,
- export the module status bits as a CSV file, e.g. for use in a Programmable controller.

Edit tag names

Figure 7:
Edit tag names button

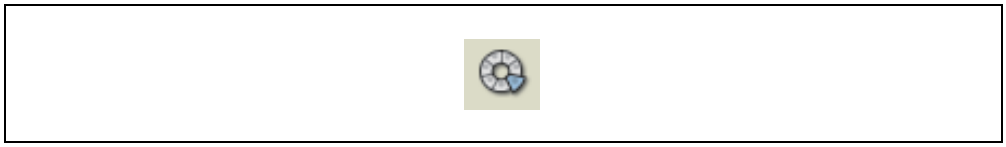

The **Edit tag names** button opens the central Tag name editor (see Section 5.6.10).

Online edit mode button

If you need to change the configuration while the Setting and Monitoring Tool is connected to the system, you can use the **Online edit mode** button in the upper right corner of the screen over the configuration area to switch into the edit mode. This way it is possible to edit the configuration without disconnecting from the system first.

Figure 8:
Online edit mode button in the hardware view

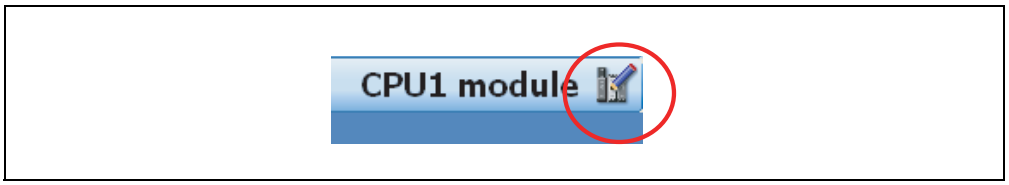

5.5.1 Exercise for configuring the MELSEC-WS modules

Exercise

- Create a new standalone project using the **New Project** button. All available MELSEC-WS modules are displayed in the **Modules** selection window. All modules are grayed out with the exception of the CPU modules.
- Select the function package from the dropdown list under the desired CPU module (WS0-CPU0, WS0-CPU1 or WS0-CPU3). Function package Revision V 2.xx requires CPU firmware version 2.01 or higher (see Chapter 3).
- Use the mouse to drag the CPU module into the **Configuration area**. The CPU module is displayed magnified there. The inputs/outputs and terminals are visible. The CPU modules are now grayed out and the other modules (network modules, I/O modules) can be selected in the **Modules** selection window.
- Move further safety I/O modules in the **Configuration area**. Green arrows indicate where the new module will be positioned. Grey arrows indicate possible other positions. The CPU module is always located at the left. Up to two network modules follow directly to the right of the CPU module. Then the safety I/O modules follow. The safety relay output modules have to be positioned at the far right.
- Right-click the individual modules and select **Edit...** in the context menu. Enter a new tag name (module name) for the respective module and close the window by clicking **OK**.
- Change the positions of the modules subsequently by using the mouse to drag them to a different position.
- Remove modules from the configuration area by right-clicking the module and choosing the **Remove module…** command in the context menu. Alternatively, you can use the mouse to drag the module to the trashcan at the bottom left of the **Configuration area**.

Note

- A MELSEC-WS safety controller can contain maximally two network interface modules.
- A MELSEC-WS safety controller can contain maximally twelve I/O modules.

Enable configurations with more than twelve I/O modules

- Using Setting and Monitoring Tool version V1.7.0 or higher you can enable configurations with up to 22 I/O modules. This feature makes it possible for you to prepare a common maximum configuration for several similar systems and then to adapt this configuration to the related system by simply deleting modules that are not required.
- For configurations containing more than twelve I/O modules, the following restrictions apply:
  - You can not connect to a system and the configuration can not be transferred to the MELSEC-WS safety controller.
  - Simulation is not possible.
- A MELSEC-WS safety controller can only ever contain a maximum of two network interface modules.

How to enable configurations with more than twelve I/O modules:

➢ In the Hardware configuration view, click on the **Settings** icon at the left of the **Configuration area** to open the **Settings** dialog.

➢ On the **General** file card, activate the **Enable additional XT modules** option.

➢ Click **OK**.

5.5.2 Module status bits in the Hardware configuration view

When the MELSEC-WS safety controller is online (i.e. the Setting and Monitoring Tool is connected to the system), you can display the status bits of each module and their current values.

- Right click on any module (CPU module, network module or safety I/O module) and select **Edit...** in the context menu. If the system is online, the dialog window for the selected module opens with the additional Diagnostics file card where all available status bits for the selected module and their values are displayed.
- Click on the **Refresh** button to update the values of the module status bits.

Figure 9:
CPU status bits in the Hardware configuration view

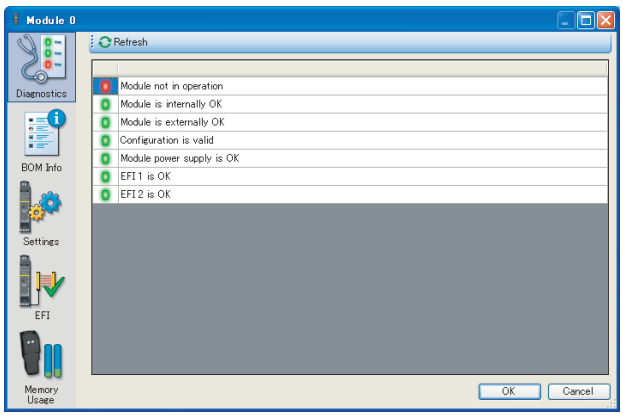

Figure 10:
Network module status bits in the Hardware configuration view

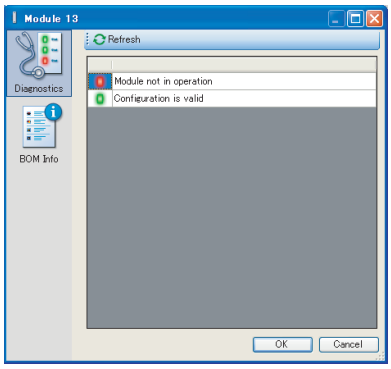

Figure 11:
WS0-XTIO module status bits in the Hardware configuration view

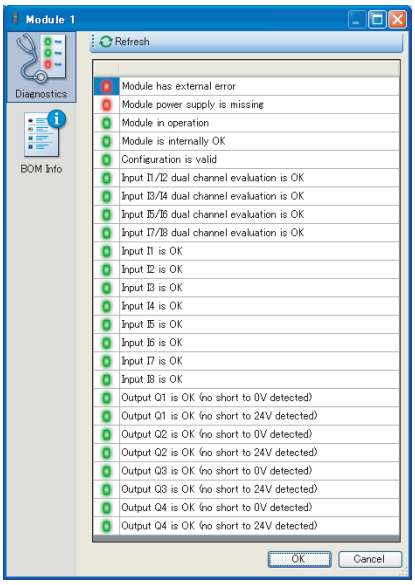

Figure 12:
WS0-XTDI module status bits in the Hardware configuration view

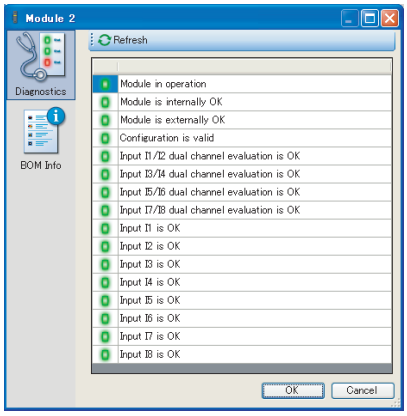

How to export the module status bits:

- In the **Hardware configuration** view, click on the **Settings** icon at the left of the **Configuration area** to open the **Settings** dialog.
- On the **Export module status** file card, click on the **Export** button. A file selection dialog opens.
- Navigate to the folder where you want to save the export file, enter a file name for the export and click on **Save**. The module status bits are saved as a CSV file.

5.5.3 Exercise for configuring the connected devices

Exercise

- The selection tree in the **Elements** selection window can be expanded and collapsed by means of a mouse click. Optional: Right-click a device and select **Edit current element** in the context menu. Assign a user-defined **Internal item number** if you want to. This **Internal item number** is stored for this device.
- Select some devices from the list and drag them into the **Parking area**.

Note The **Parking area** serves to increase clarity. You can compile all required devices here so that you do not forget any of them during the configuration. Alternatively, you can drag the devices directly from the **Elements** selection window into the **Configuration area**.

- Then drag a device from the **Parking area** into the **Configuration area**.
- If the **Configuration area** does not contain a module with suitable free inputs/outputs, the device cannot be placed there. In this case, place at least one hardware module with inputs or outputs, e.g. WS0-XTIO or WS0-XTDI, in the **Configuration area**.
- When the device is moved over suitable free inputs or outputs, they light up green. The Setting and Monitoring Tool automatically considers the required number of inputs or outputs. Drop the device on a suitable position. The device icon is now displayed in the view at this point.

Note Certain elements can not be connected to all modules:

- Dual channel elements can only be connected to safe modules.
- Pure safety elements can only be connected to safe modules.

- Drag the device to other suitable inputs or outputs or back into the **Parking area**.
- Delete the device by right-clicking the device icon and clicking **Remove** in the context menu. Alternatively, you can use the mouse to drag the device to the trashcan at the bottom left of the **Configuration area**.
- A device can be parameterized when it is located in the **Parking area** or in the **Configuration area**. Right-click a device in the **Parking area** or **Configuration area** and select **Edit...** from the context menu or double-click a device. The **Element settings** window is opened. Depending on the type of device you can:
  - assign a tag name (identifying name for the element)
  - set evaluation parameters for the element, for example the discrepancy time, ON-OFF filter or OFF-ON filter, connection to a test output, test pulses enabled/disabled, etc.
    (See also Section 5.5.6).
- Close the **Element settings** window by clicking **OK**.

5.5.4 Safe and non-safe elements in the hardware configuration

Safe and non-safe elements are shown in the hardware configuration using different colors:

- Safe elements are marked yellow.
- Non-safe elements are marked gray.

The majority of elements are only marked as safe or non-safe when they are dragged to a corresponding input or output:

- Safe elements that are dragged to a safe input or output are marked yellow.
- If an element marked gray is dragged to a safe input or output, it remains marked gray but can be marked yellow by editing.

How to mark an element as a safety element:

➢ Double-click a gray or red marked element or click it using the right mouse button and select Edit... on the context menu. The Element settings window opens.

➢ Activate the Safety element checkbox.

➢ Click on OK to close the Element settings window. The element is now marked yellow.

5.5.5 Expanding elements

Some elements consist of a group of two or more sub-elements, such as an interlock that consists of a safety switch as input element and an interlock with locking as output element. Normally these elements must be connected to one module (e.g. WS0-XTIO), but some of these elements can be expanded so that the individual sub-elements can be connected to different modules.

How to expand an element:

➢ Place the element (e.g. an interlock) in the **Parking area**.

➢ Right click the element to open the context menu.

➢ Select the **Expand** command. The element in the **Parking area** is replaced by its sub-elements which can be treated like individual elements.

5.5.6 Parameterization of connected elements

Input and output elements can be parameterized when they are located in the **Parking area** or in the **Configuration area**. Depending on the type of element you can:

- assign a tag name (identifying name for the element)
- set evaluation parameters for the element, for example the discrepancy time, ON-OFF or OFF-ON filter, connection to a test output, test pulses enabled/disabled, etc.

How to parameterize a connected element:

➢ Double click on the element or right click an element in the **Parking area** or in the **Configuration area** and select **Edit...** from the context menu. The **Element settings** window is opened.

Figure 13:
Element settings window for an ES21 emergency stop button

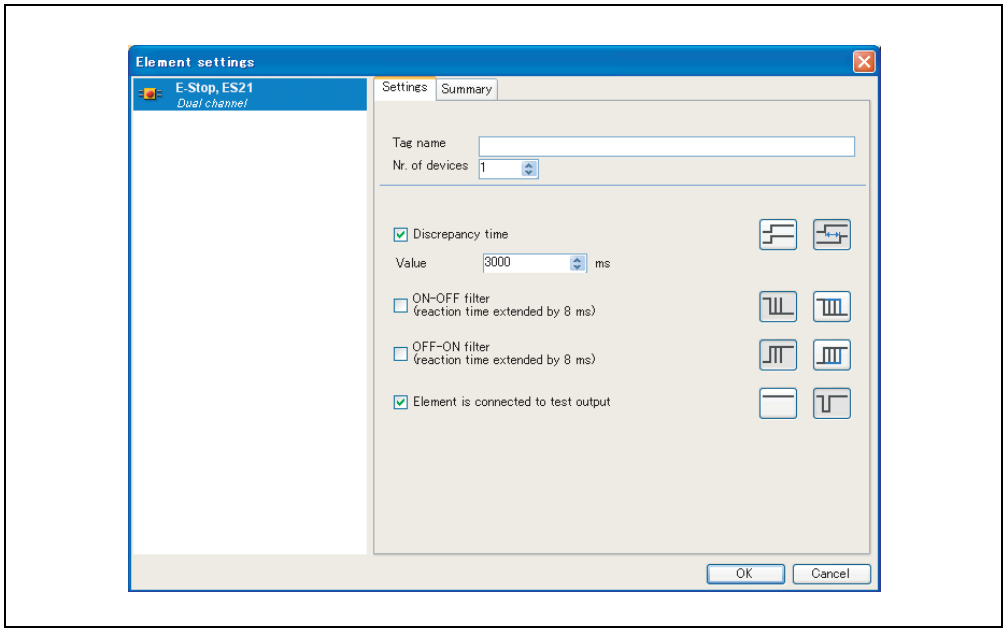

Tag name

➢ Enter a **Tag name** for the element, if desired. Otherwise the default tag name is used.

Nr. of devices

➢ Adjust the **Nr. of devices**, if necessary. E.g. if you have connected a cascade of several SICK L21 testable type 2 sensors to one input, you can use this function to adjust the number of devices that will appear on the bill of material in the project report to match the actual number of devices used.

Element is connected to test outputs

By activating or deactivating the option **Element is connected to test outputs** you can determine whether the respective element shall be tested or not. By connecting an element to the test outputs …

- short circuits to 24 V in the sensor wiring which could inhibit the switch-off condition can be detected,
- electronic sensors with test inputs (e.g. SICK L21) can be tested.

➢ To activate or deactivate the connection to the test outputs either click on the checkbox or on the 3D buttons on the right side.

Note One WS0-XTDI has 2 test sources only, even if it has 8 test output terminals.

ATTENTION

Protect single channel inputs against short circuits and cross circuits!

If a stuck-at-high error occurs on a single channel input with test pulses that was previously Low, the logic may see a pulse for this signal. The stuck-at-high first causes the signal to become High and then after the error detection time back to Low again. Due to the error detection a pulse may be generated. Therefore single channel signals with test pulses need special attention:

- If the stuck-at-high occurs on a single channel signal input with test pulses that was previously High, the logic will see a delayed falling edge (High to Low transition).
- If a single channel input is used and an unexpected pulse or a delayed falling edge (High to Low) at this input may lead to a dangerous situation, the following measures have to be taken:
  - Protected cabling of the related signal (to exclude cross circuits to other signals)
  - No cross circuit detection, i.e. no connection to test output.

  This needs especially to be considered for the following inputs:
  - **Reset** input on the Reset function block
  - **Restart** input on the Restart function block
  - **Restart** input on the Press function blocks (Eccentric Press Contact, Universal Press Contact, N-break, Press Setup, Press Single Stroke, Press Automatic)
  - **Override** input on a Muting function block
  - **Reset** input on a Valve function block
  - **Reset to zero** input and **Reload** input on a Counter function block

5.5.7 Customized elements

In addition to the standard input and output elements that are installed with the Setting and Monitoring Tool, it is possible to create, configure, import and export customized elements. This function allows you to create element templates with preset configuration options (e.g. single-channel or dual-channel evaluation, discrepancy time, on-off filtering, connection to test outputs etc.) that are adapted to your specific equipment needs.

How to enable customized elements:

- In the **Hardware configuration** view, click on the **Settings** icon at the left of the **Configuration area** to open the **Settings** dialog.
- In the **General** tab, activate the **Enable customized elements** option.
- Click on **OK**.

How to create a customized element:

- In the **Hardware configuration** view, right click on any element (in the **Elements** window, in the **Configuration area** or in the **Parking area**). It is recommended to choose an element that is as similar as possible to the customized element you want to create.
- From the context menu select the command **Save as customized element...**. The **Create custom element template** window opens.

Figure 14:
Create custom element template window

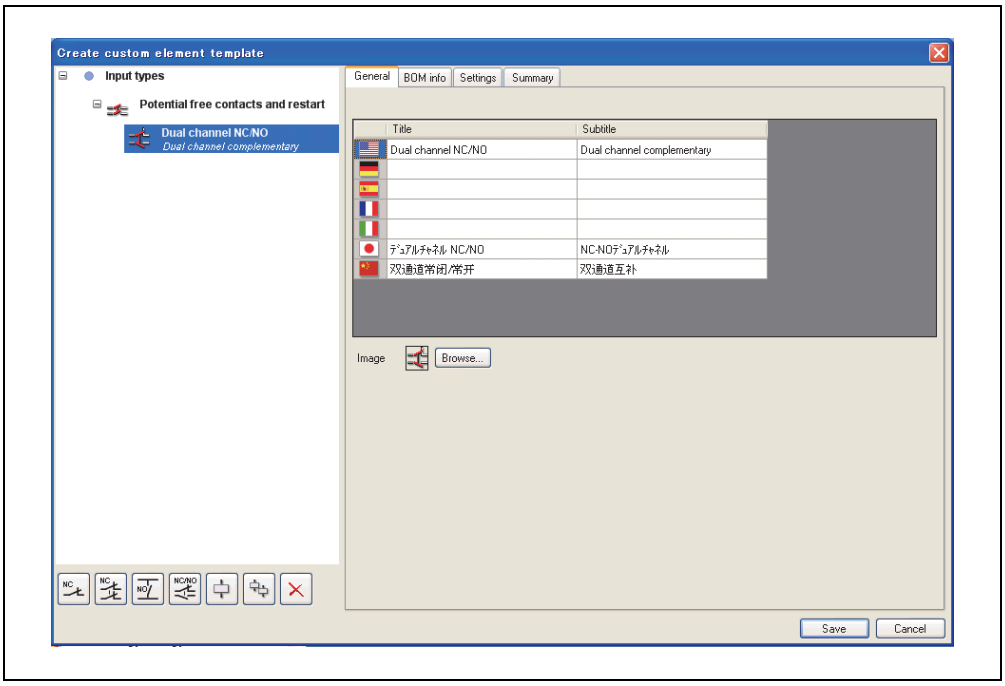

- Rename and configure the element as needed (see below for details).
- Click on **Save** to save the new element and close the window.

Note

- You have to enter a new name for the template in order to save it.
- Make sure that all settings are complete and correct before you save the new template. It is not possible to change an existing element template within the Setting and Monitoring Tool, no matter whether it is a standard or a customized template.

How to configure a customized element:

- Select the new customized element in the element tree and use the sub-element buttons under the element tree to add additional inputs or outputs. You can choose between single-channel and various dual-channel input and output types. If you add sub-elements, these will appear in the element tree one level below the customized element.

Figure 15:
Add or delete sub-elements for a customized element

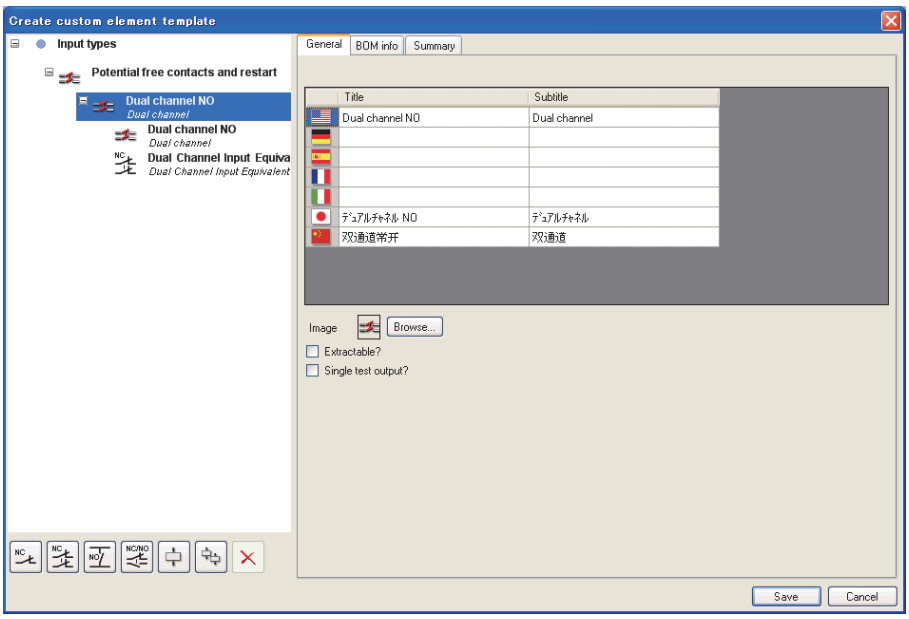

- Select the new element in the element tree and enter a new name for it in the **General** file card. It is not possible to save an element with a name that is already used by another element. However, it is not necessary to enter the new element name in all languages shown. You only have to change the element name in the language that is currently set in the Setting and Monitoring Tool on your PC.
- Use the **Browse...** button at the bottom of the screen to assign a custom image to any element or sub-element.
- If an element contains two or more sub-elements, the **Extractable?** option is available. Elements based on a template that has been configured with this option active can be expanded or “split” into their sub-elements which can then be treated as individual elements (see Section 5.5.5).
- If the option **Single test output** is activated, all sub-elements of the element must be connected to the same test output. Examples for this are the tested user mode switches which must use either inputs I1/I3/I5/I7 if test output X1 is used or inputs I2/I4/I6/I8 with test output X2.
- Enter the desired BOM (“bill of material”) information in the **BOM info** file card for the used elements and sub-elements. This information will be used in the Setting and Monitoring Tool report in the material list.

Figure 16:
Entering the BOM info for a customized element

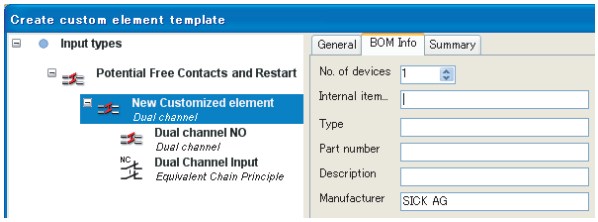

➢ Select the customized element (or the sub-element) that you want to configure and click on the **Settings** file card to edit the configuration settings.

Figure 17:
Editing the configuration settings of a customized element

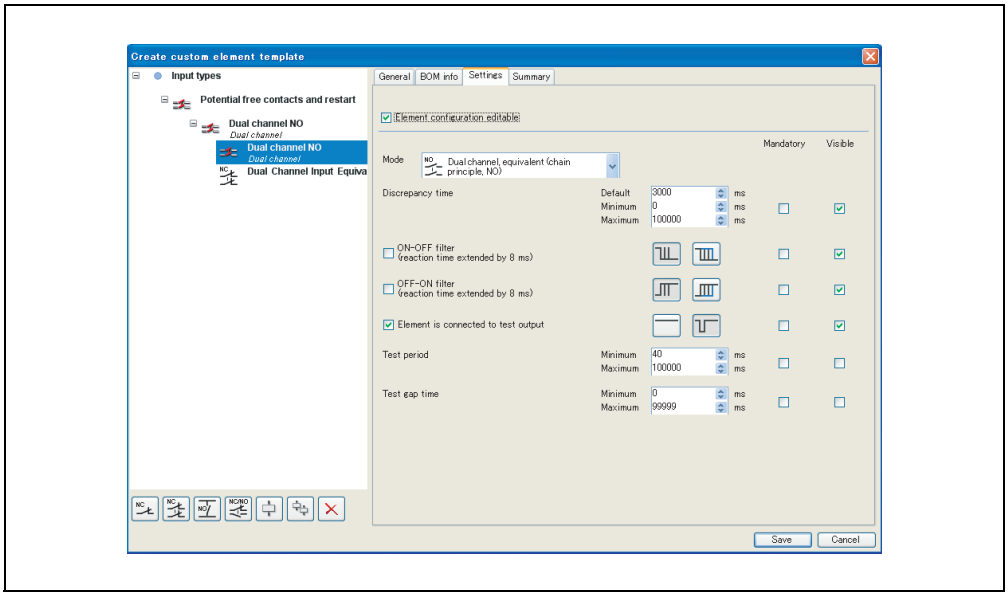

➢ Adjust the settings (e.g. Discrepancy time, ON-OFF filter, OFF-ON filter etc.) as described in Section 5.5.5. In addition to editing the configuration options, you can also activate or deactivate them completely and enter maximum, minimum and preset values.

➢ Check the **Mandatory** checkbox for a function, if elements based on this template must be used on modules supporting this function (e.g. to create an element that requires connection to a module with test outputs).

➢ Check the **Element configuration editable** checkbox, if Elements based on this new template shall be editable within the limits that are preset on the **Settings** file card.

➢ If only selected individual configuration options shall not be editable, uncheck the **Visible** checkbox for these options.

How to transfer a customized element to another PC:

➢ Save the project file and open it on the other PC. Customized elements contained in the project will be imported automatically.

Note Importing customized elements requires Setting and Monitoring Tool version 1.3.0 or higher.

How to delete a customized element:

➢ In the **Elements** window in the **Hardware configuration** view, right click on the customized element you want to delete.

➢ From the context menu select the command **Delete template...**. You will be asked for confirmation.

➢ Click **OK**.

Note It is not possible to delete a standard element template.

How to export customized elements as XML files:

- In the **Elements** window, right click on the customized element you want to export and choose the **Export...** command from the context menu. A folder selection dialog opens.
- Select or create the folder where you want to save the customized element and click on **OK**. The customized element is then saved as an XML file.

How to import customized elements as XML files:

- In the **Elements** window, right click on any element or element group and choose the **Import...** command from the context menu. A file selection dialog opens.
- Select the XML file for the customized element that you want to import and click on **Open**. The customized element will be imported.

5.5.8 Connection of SICK EFI-compatible devices

You can connect SICK EFI-compatible devices to your CPU module if your project contains a WS0-CPU1 or WS0-CPU3.

- Drag and drop the desired SICK EFI-compatible device (e.g. a C4000 safety light curtain) from the **Elements** selection window to the EFI connection of the CPU module. The **Device selection wizard** will open where you can select the exact device variant or enter its type code directly.
- Click **Finish** to confirm your selection and to connect the selected SICK EFI-compatible device. The EFI bits for the connected SICK EFI-compatible device are now available in the logic editor as inputs and outputs for the CPU.
- Double-click an SICK EFI-compatible device to open its configuration dialog.

Note

- The configuration of an SICK EFI-compatible device must be uploaded or transferred separately in the configuration dialog of the SICK EFI-compatible device. To do this, you have to connect the Setting and Monitoring Tool with the MELSEC-WS safety controller first.
- For details of the SICK products, please contact your local SICK representative (see Section 15.4).
  www.sens-control.com
- Depending on the devices already connected there may be restrictions which devices can be connected on the other EFI connection.

Switching of the EFI address

In some combinations of SICK EFI-compatible devices it is mandatory that the MELSEC-WS safety controller has the EFI address 13, because EFI address 14 is already occupied by another SICK EFI-compatible device (e.g. EFI network module, UE403).

- To switch between EFI address 13 and 14, right click on the WS0-CPU1 or WS0-CPU3 and choose **Address 13** or **Address 14** from the context menu.

Note After switching of the EFI address, the MELSEC-WS safety controller carries out a reset, i.e. all outputs are switched off.

EFI system integrity test

The WS0-CPU1 or WS0-CPU3 can test the SICK EFI-compatible devices connected to the EFI interfaces at every voltage reset. The following parameters can be compared with the parameters saved the last time the CPU module was configured:

- Type code: A device with the same type code is expected.
- Serial number: A device with the same serial number is expected.
- Configuration data: A device with the same configuration data is expected.

If the parameters of the connected device do not match, the WS0-CPU1 or WS0-CPU3 will use 0 for the input and output data of this EFI device and the corresponding EFI LED (EFI1 or EFI2) will start flashing ☀ Red (1 Hz).

Note If the configuration data is used for the EFI system integrity test, then it is imperative to transfer the configuration of the connected SICK EFI-compatible devices before the configuration of the CPU module is transferred.

If the configuration does not match the devices actually physically present a question mark is displayed in the hardware configuration in Setting and Monitoring Tool at the related EFI connection.

- An EFI-compatible device is physically present on this EFI connection but not in the configuration of the CPU module. If you now upload the configuration using the Transfer project command, this device will be added to the configuration of the CPU module. Exception: If the configuration in the CPU module is verified, the sensor is not corrected. In this case the configuration in the CPU module remains unchanged.
- An EFI-compatible device is configured on this EFI connection, but is not present physically. In this case the icon for the device is displayed with a question mark. If you now upload the configuration using the Transfer project command, this device will be removed from the configuration of the CPU module. Exception: If the configuration in the CPU module is verified, the sensor is not corrected. In this case the configuration remains unchanged.

How to configure the EFI system integrity test:

➢ If the Setting and Monitoring Tool is connected to the WS0-CPU1 or WS0-CPU3, click on **Disconnect** or change to the **Edit mode**.

➢ Right click on the CPU module and select the **Edit...** command from the context menu. In the following dialog, click on the **EFI** button on the left side.

Figure 18: Configuration of the EFI integrity test

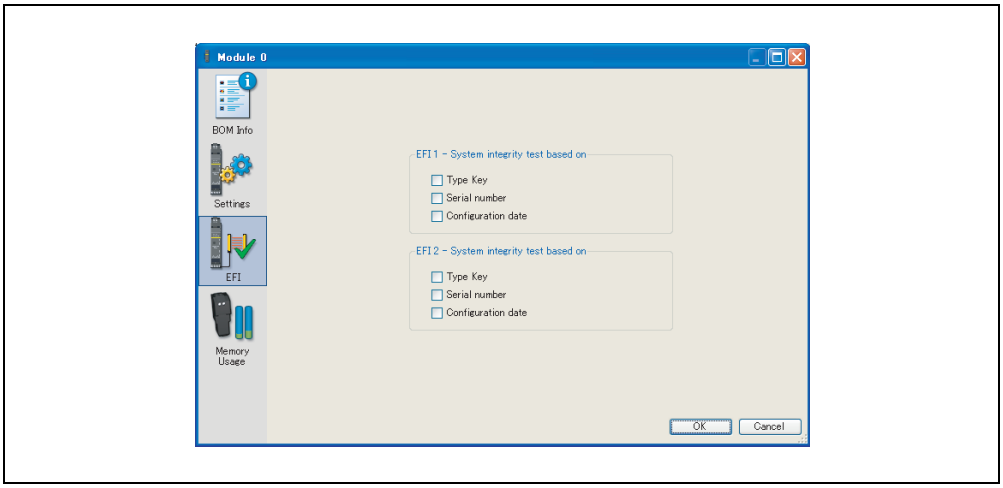

➢ Check all parameters that shall be used for the EFI system integrity test.

➢ Click **OK** to accept the settings and to close the dialog.

5.5.9 Export and import of a partial application

You can export or import a partial application. All modules with their associated inputs and outputs and logic are exported except for the WS0-CPU0/WS0-CPU1/WS0-CPU3. If you are exporting a project containing SICK EFI-compatible devices have to be reconfigured when you import the configuration into another project.

When you import a partial application into an existing project, the stored modules, elements and logic are added to the project while the rest of the project remains unchanged. This is especially useful if you need to replace a CPU in an existing project without re-configuring the entire hardware and logic.

Note Tag names of CPU markers, logic results, EFI1/EFI2, and RS-232 I/O cannot be exported. (For example, when an exported CPU marker with a tag name is imported to another project, the tag name is not reflected. A tag name configured in the import-target project is displayed. If no tag name is configured in the import-target project, no name is displayed.)
Among the outputs in the logic editor, CPU output markers, logic results, and EFI1/EFI2 are imported only when they are not used in the import-target project.

How to export a partial application:

- In the **Partial applications** selection window, click on **Save as new partial application**.

Or:

- Right click on the CPU module and select the **Export configuration...** command from the context menu. The following dialog opens.

Figure 19:
Export configuration dialog

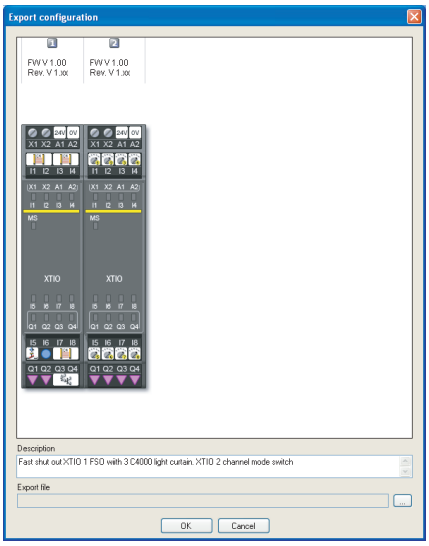

- You can add a description of the partial application in the **Description** field.
- Click on the button on the right of the **Export file** field. A file selection dialog opens. Navigate to the folder where you want to save the export file, enter a file name for the export and click on **Save** to close the file selection dialog again.
- Click **OK** to export the partial application.

How to import a partial application

➢ In the **Partial applications** selection window, click on **Load partial application**.

Or:

➢ Right click on the CPU module and select the **Import configuration...** command from the context menu. The following dialog opens.

Figure 20:
Import configuration dialog

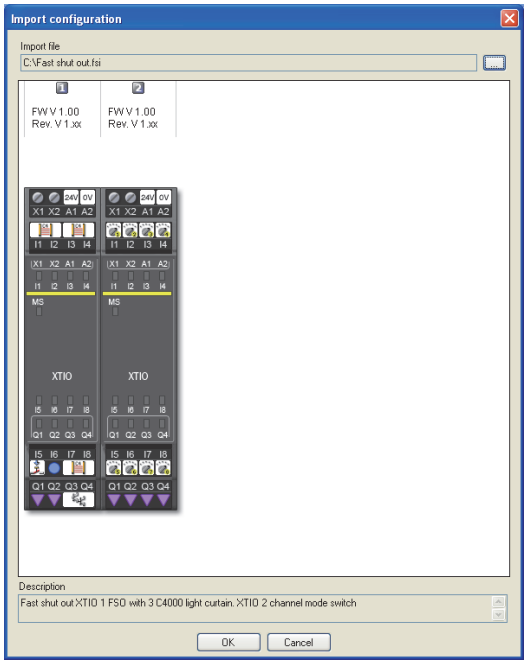

➢ Click on the button on the right of the **Import file** field. A file selection dialog opens.

➢ Select any fsi file and click **OPEN** to display the contained partial application and description in the panel.

➢ Click **OK** to import the selected partial application. The hardware in the import file will be added to your projects hardware configuration while the imported logic will be inserted as one or several new separate pages in the **Logic editor**.

Example: A project contains a WS0-CPU1 and an WS0-XTIO module, a C4000, an emergency stop button, a robot and one page with the necessary logic in the logic editor. The partial application to be imported contains another WS0-XTIO module with a two hand control and a motor plus one logic editor page with the logic for controlling these devices. After the import has been completed, the project will contain both WS0-XTIO modules with the respective devices connected and both logic programs on two separate pages.

How to exchange a CPU module in a project:

Using the export and import function, it is possible to exchange a CPU module (e.g. WS0-CPU0 to WS0-CPU1 or another firmware version (from Ver.1 to Ver.1.xx or later)) in an existing project without having to re-configure the project (hardware configuration, logic).

➢ Load the project with the CPU module you want to exchange.

➢ Export the partial application as described above.

➢ In the **Project** menu, select the command **New**, **Standalone station project**.

➢ In the **Hardware configuration** view, add the desired new CPU module to the new project.

➢ Right click on the new CPU module and reimport the partial application.

Note The configuration of any connected SICK EFI-compatible devices is not included in the exported partial application. Therefore these devices have to be reconfigured.

How to exchange a safety I/O module in a project:

- Load the project with the safety I/O module you want to exchange.
- Add the desired new safety I/O module to the hardware configuration.
- Move the connected elements from the old module to the new module. This way the logic connections will be preserved.
- Delete the old module.

Note

- This method does not work for elements that are used in combination with a Fast shut off function block, because these elements can not be moved to another module anymore.
- This method does not work either for grouped elements like e.g. operating mode selector switches and switches with interlock.

5.5.10 RS-232 routing

You can access the input and output data on the MELSEC-WS safety controller via the RS-232 interface on the CPU. This feature makes possible, e.g., communication between the MELSEC-WS safety controller and a Programmable controller connected without using a network interface module or the connection of an HMI.

ATTENTION

Do not use the RS-232 interface for safety-related applications!

The communication protocol used for the RS-232 interface does not support any safety mechanisms necessary for communication in a safety network.

For this reason the data exchanged via the RS-232 interface are not allowed to be used for safetyrelated functions.

How to activate the RS-232 routing:

- In the hardware configuration, click the **Settings** button in the left of the configuration area.
- On the **General** tab, select the **Enable RS-232 routing for the CPU** option.

Figure 21:
Activating RS-232 routing

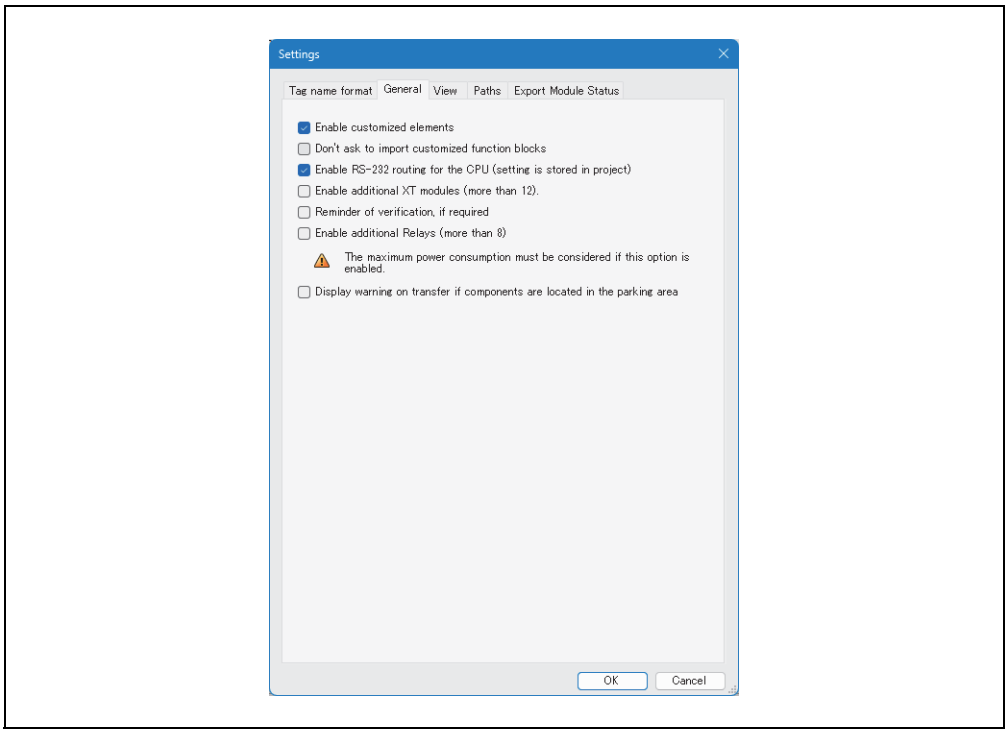

- Click OK. The RS-232 routing is then activated. On the Interfaces menu you can now open the configuration window for the data to be transferred.

You can read up to 100 bytes from the MELSEC-WS safety controller and write up to 4 bytes to the MELSEC-WS safety controller.

Configuration of the input data for the RS-232 routing

- On the **Interfaces** menu, click **RS-232 [0]** to open the dialog box for the RS-232 configuration.
- Click the **MELSEC-WS to RS-232** button on the left to display the routing configuration for the input data.

Figure 22:
Configuration of the operating data transferred via RS-232 to the network

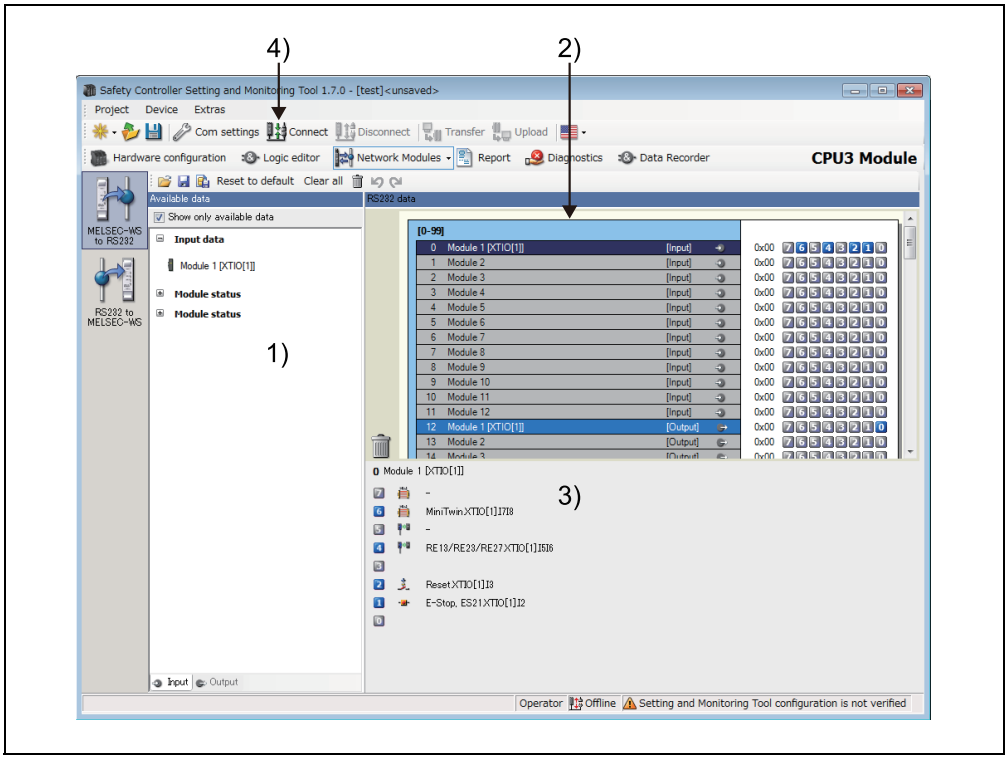

Basically this dialog is divided into three areas: **Available data** 1), **RS-232 data** 2) and **Tag names** 3). The upper left corner of the dialog holds the toolbar 4).

The toolbar

Figure 23:
Toolbar for the routing configuration

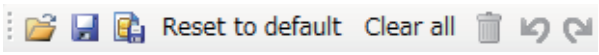

The toolbar contains buttons for the following actions (from left to right):

- The **Load user configuration** and **Save user configuration** buttons allow you to load and/or save a configuration in XML format, including the used tag names. If you load a configuration, all previously made changes that have not been saved will be lost. You can not undo this action.
- Using the **Import** and **Export** buttons you can import and export the tag names used as a CSV file (comma separated values). This allows you to import and use the assigned tag names in a Programmable controller program.

Note The **Import** button is only available for the **RS-232 to MELSEC-WS** routing configuration.

- **Reset to default** restores the default routing configuration. You will be asked for confirmation. If you click **Yes**, all previously made changes that have not been saved will be lost. You can not undo this action.
- **Clear all** clears the configuration, i.e. deletes all assigned bytes in the **RS-232 data** area. You will be asked for confirmation.
- **Delete routing** deletes the currently selected byte in the **RS-232 data** area.
- The **Undo** and **Redo** buttons allow you to undo or redo changes you made to your configuration.

Available data

This area offers all sources from which data may be routed into the network. It is divided in two views holding the available input and output data. You can switch between these views using the file cards at the bottom.

- The **Input** view contains the input values for the connected MELSEC-WS modules and EFI devices as well as the module status data. If your MELSEC-WS safety controller contains network interface modules, the input data on the network interface modules (i.e. the data the network interface modules receive from the network) are also available here.
- The **Output** view offers the output values for the connected MELSEC-WS modules and EFI devices as well as the Logic results from the logic editor.

All sources supported by the current configuration are displayed in black:

- connected MELSEC-WS modules
- connected EFI devices
- configured logic results*1
- gateway input data and gateway output data

Sources currently not configured will be displayed in grey. Activating the **Show only available data** checkbox in the upper left corner hides the unused sources from the view.

Sources that are used in the logic program are marked with a small symbol beside the text.

*1 In the default configuration, only the first logic result byte (Logic Result 0) is active and available. You can activate more output bits for logic results in the logic editor.

How to add a data byte to the routing table:

➢ Drag and drop an element (i.e. byte) from the **Available data** area to a free slot in the **Gateway data set to network** area. If the desired position is not free, you will have to clear it first by deleting or moving the byte currently assigned to it.
It is possible to use the same byte several times in the routing table.

RS-232 data area

This area contains the routing table. It shows the actual contents of the data sent via the RS-232 interface. Bytes and bits highlighted in blue contain “live” system data if the hardware configuration supports the source. Bytes highlighted grey actually do not have data associated with them since the hardware configuration does not support the sources.

How to delete a data byte from the routing table:

➢ Drag and drop the byte you want to delete to the trashcan icon in the bottom left corner of the **RS-232 data** area.

Or:

➢ Select the byte you want to delete by clicking it with the left mouse button. Then, click on the **Delete routing** button in the toolbar.

Or:

➢ Call up the context menu by clicking the respective byte with the right mouse button. In the context menu, select the **Delete routing** command.

How to move a data byte to another place in the routing table:

➢ Drag and drop the byte you want to move to the desired position. If the desired position is not free, you will have to clear it first by deleting or moving the byte currently assigned to it.

Tag names area

This area shows the tag names for all bits in the byte currently selected in the **Available data** area or in the **RS-232 data** area. You can edit the tag names in the tag name editor and also to some extent in the logic editor and in the hardware configuration dialog box (e.g. for expansion modules). In the **Tag names** area of the MELSEC-WS to RS-232 configuration dialog, it is not possible to edit the tag names.

Configuration of the output data (RS-232 to MELSEC-WS)

➢ Click the **RS-232 to MELSEC-WS** button on the left. The following dialog will be displayed.

Figure 24:
RS-232 to MELSEC-WS dialog

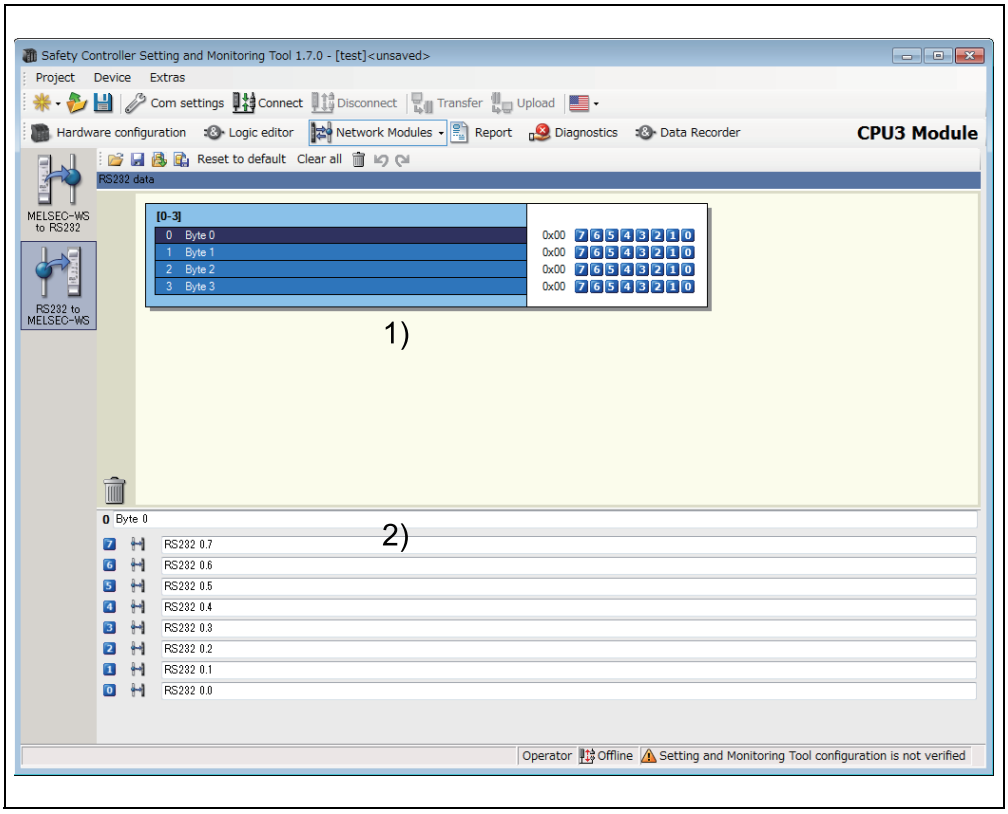

Basically this dialog is divided into two areas: **RS-232 data** 1) and **Tag names** 2):

The **RS-232** data area shows the current configuration of the output data.

The **Tag names** area shows the tag names associated to the byte selected in the **RS-232 data** area.

➢ Choose a byte in the **RS-232** data area.

➢ For each bit of the selected byte that you wish to use, enter a tag name.

Each bit to which you assign a tag name here is then available as an RS-232 input in the logic editor.

Figure 25:
Tag names for the RS-232 output data in the logic editor

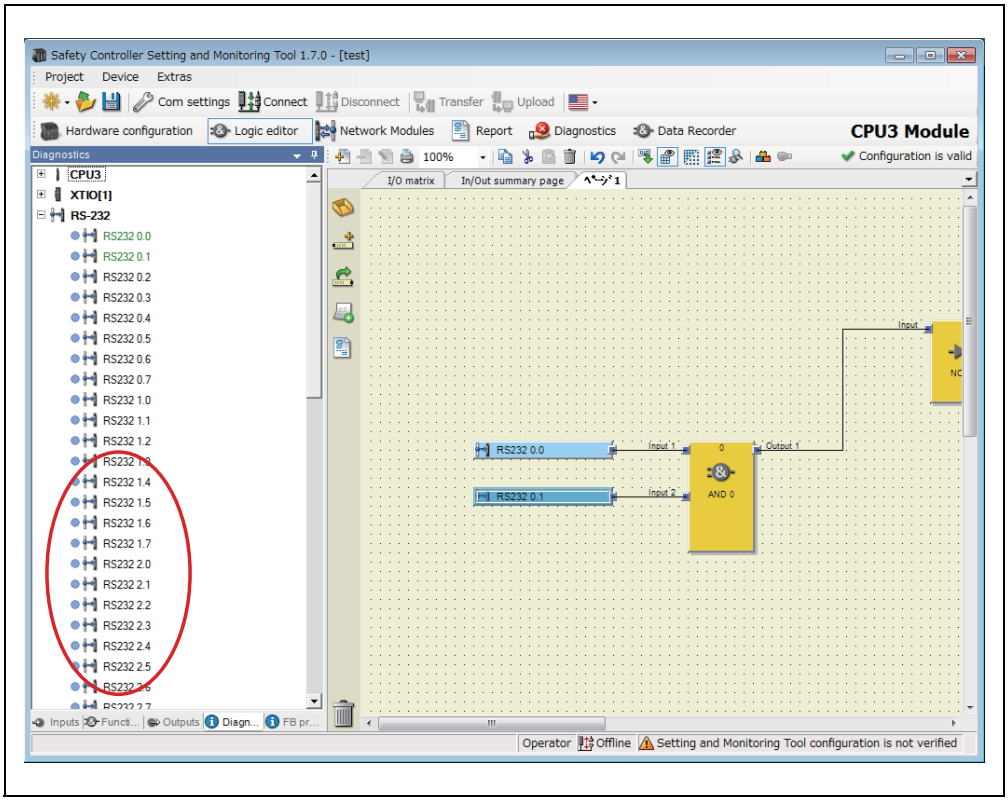

Saving and loading a configuration

Using the buttons **Load user configuration** and **Save user configuration** you can save or load a configuration in XML format. If you load a configuration, all previously made changes that have not been saved will be lost. You can not undo this action.

Importing and exporting a configuration

Using the **Import** and **Export** buttons you can import and export a configuration including the tag names used as a CSV file (comma separated values). This allows you to import and use tag names you have assigned in the MELSEC-WS project in the Programmable controller program and vice versa.

If you import a configuration, all previously made changes that have not been saved will be lost. You can not undo this action.

Note The **Import** button is only available for the **RS-232 to MELSEC-WS** routing configuration.

5.6 Logic editor view

The Setting and Monitoring Tool includes a graphical **Logic editor**. The function logic is program-med by using logic and application-specific function blocks. The inputs, function blocks and outputs are positioned on a worksheet and are connected correspondingly.

As soon as a MELSEC-WS CPU module is located in the **Configuration area**, the **Logic editor** can be accessed via the tab of the same name.

Figure 26:
The logic editor

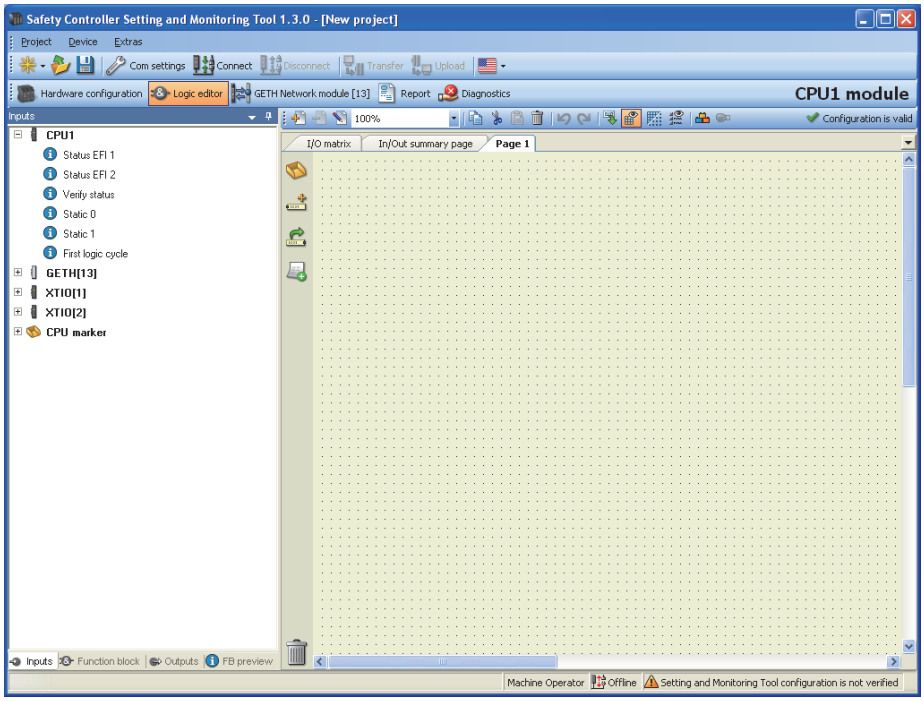

The **Logic editor** window consists of the following sub-windows:

- Menu bar with the menus **Project, Device, Extras**
- Toolbar with icons for rapid access to menus that are often used
- Tabs for switching between the **Hardware configuration, Logic editor, Network module [13]** (if the project contains at least one network module), **Report**, **Diagnostics** and **Data Recorder** view.
- Specific toolbar for the logic editor with the following functions: **Add/Delete/Rename page**, **Print current page**, **Zoom**, **Copy/Cut/Paste/Delete elements**, **Undo/Redo last action**, **Open dialog to edit logic result markers**, **Show/Hide grid**, **Show grid of lines/dots**, **Show function block I/O description**, **Search function block**, **Start simulation mode** and **Start forcing mode**
- Selection windows for **Function block**, **Inputs**, **Outputs** and **Diagnostic inputs**
- **FB preview** window on the bottom left for displaying the important system resources such as the number of used/available function blocks or the current logic execution time (cycle time of the logic). When the cursor is moved over a function block in the worksheet, additional information on this function block is displayed in the **FB preview** window.
- Worksheets (**Pages**) for creating the logic, **I/O summary page** and **I/O matrix** that can be selected alternatively by using tabs

5.6.1 Exercise for using the logic editor

Exercise

- In the **Hardware configuration** view combine a CPU module, at least one WS0-XTIO module and one element.
- Switch to the **Logic editor** by clicking the tab of the same name.
- In the selection window for **Inputs**, **Function block** and **Outputs**, click **Inputs** and drag an input from the list onto the worksheet. You can mark several inputs if you click them while holding down the Ctrl key or if you click the first and last in a series while holding down the Shift key. Then you can drag all marked inputs to the worksheet simultaneously.
- In the selection window for **Inputs**, **Function block** and **Outputs**, click **Function block** and drag an application-specific or logic function block from the list onto the worksheet. The function block will be displayed orange while not all of its inputs have been connected.
- In the selection window for **Inputs**, **Function block** and **Outputs** click **Outputs** and drag an output from the list onto the worksheet.

Note The inputs and outputs are marked in color in the logic editor depending on their function:

  – gray: non-safe
  – yellow: safe
  – blue: diagnostics

- Connect the node of the input with an input field of the function block (node) and an output (node) of the function block with the node of the output. To do so, click one node with the left mouse button, hold the left mouse button pressed and drag the cursor to the node with which the first node is to be connected. Once all inputs of the function block have been connected, the function block is displayed yellow.
- Alternatively it is possible to place and connect inputs or outputs in one step. Drag an input or output while keeping the left mouse button pressed to the desired function block input or output node. If the mouse pointer hovers over the node it will be highlighted. Then drag the input or output to the place on the worksheet where it shall be positioned and release the left mouse button.
- While holding down the Ctrl key you can drag and drop the end of an already existing connection line from one node to another. This is useful to reassign a connection without having to delete it first.
- Mark the input, function block, output and the connections by clicking them or by dragging with the left mouse button pressed and then position as desired.
- In the selection window for **Inputs**, **Function block** and **Outputs**, click **FB preview**. A preview of the respective element or the details of a function block are displayed in the **FB preview** window when you move the cursor over it.
- To replace one function block with another function block, drag the required function block from the selection list over a function block already positioned until the existing function block is highlighted green, and then release the left mouse button. You are prompted as to whether you want to replace the function block positioned previously with the new function block.
- Using the right mouse button, click an input or output element in the logic editor to show the logic pages on which the element clicked is used.
- In order to delete an element from the worksheet, right-click it and select the **Delete** command from the context menu.

5.6.2 Logic access levels

The logic access levels function allows you to protect individual pages in the logic editor using a password. You can prevent changes to the logic page by unauthorized persons.

There are the following logic access levels:

Table 4: Access levels in the logic editor

Access level	Right to
Not logged in	• Edit and view unprotected pages • View pages that are access protected but whose visibility has not been protected
Logic access level 1	• Edit and view unprotected pages • Edit and view pages that have been access protected and/or whose visibility has been protected with access level 1 • View protected pages that have been access protected with access level 2 and whose visibility has been protected up to access level 1 • Set up the access or visibility protection for unprotected pages (access level 1 only) • Remove the access or visibility protection from protected pages (access level 1 only)
Logic access level 2	• Edit and view all protected and unprotected pages • Set up the access or visibility protection at all levels • Remove the access or visibility protection at all levels • Disable page protection

How to activate page protection:

- ➢ In the hardware configuration, right click on the CPU module and select the **Change in access for Logic pages** command from the context menu.
- ➢ Activate the **Enable password protection for Logic pages** option.
- ➢ Enter passwords for the logic access levels 1 and 2.
- ➢ Click **OK**.

How to log in to a logic access level:

- ➢ In the hardware configuration, right click on the CPU module and select the **Change in access for Logic pages** command from the context menu.
- ➢ In the **Current User Level** area, click on **Log in**.
- ➢ In the Log-in dialog box select the logic access level for which you want to log in, type the password and click **Log in**.
- ➢ Click **OK**.

How to log off from a logic access level:

- ➢ In the hardware configuration, right click on the CPU module and select the **Change in access for Logic pages** command from the context menu.
- ➢ In the **Current User Level** area, click on **Log off**.
- ➢ Click **OK**.

How to protect a logic page:

- Open the page to protect in the logic editor.
- Using the right mouse button, click the page and, on the context menu, select the required logic access level on the **Set up access protection for Logic page** submenu.
- If you are not logged in, you will now also be prompted to enter the password for the required logic access level. Enter the password and click on **Log in**.

The logic access level for a protected page is displayed at the top left of the page in a light-gray font.

How to remove the page protection from a logic page:

- In the logic editor open the page on which you want to remove the protection.
- Right-click on the page, and in the context menu of the page, select the **Remove access protection for Logic page** command.

If you are not logged in, you will now also be prompted to enter the password for the required logic access level. Enter the password and click on **Log in**.

How to apply the visibility protection:

- Open the desired page in the logic editor.
- Right-click on the page and select the **Protect page visibility** submenu in the context menu of the page.
- If necessary, enter the password for the required logic access level and click on **Log in**. If the current user is logged into the same logic access level or a higher one, the visibility restriction for a protected page will be displayed on the top left-hand side in light gray font. If not, the contents of the page will remain hidden and the required logic access level will be displayed in red font.



ATTENTION

Unverified projects that contain logic pages with visibility protection cannot be transferred to Setting and Monitoring Tool and cannot be verified. When partial applications are exported, the logic access levels and passwords are not exported at the same time. Therefore, you may have to set up password protection again after importing a partial application. Applications containing protected logic pages can only be exported after logging into the relevant logic access level.

How to remove the visibility protection from a logic page:

- ➢ Open the desired page in the logic editor.
- ➢ Right-click on the page and select the **Remove page visibility** command in the context menu of the page.
- ➢ If necessary, enter the password for the required logic access level and click on **Log in**.

5.6.3 Validation of the configuration

The Setting and Monitoring Tool performs an automatical check of the logic program. If an error is detected, the configuration is marked as invalid and a warning icon appears in the upper right corner of the screen. Additionally, a warning icon marks the erroneous page of the logic program and the function block that is not connected correctly (e.g. one or more inputs are not connected) is displayed orange.

Figure 27:
Invalid configuration warnings

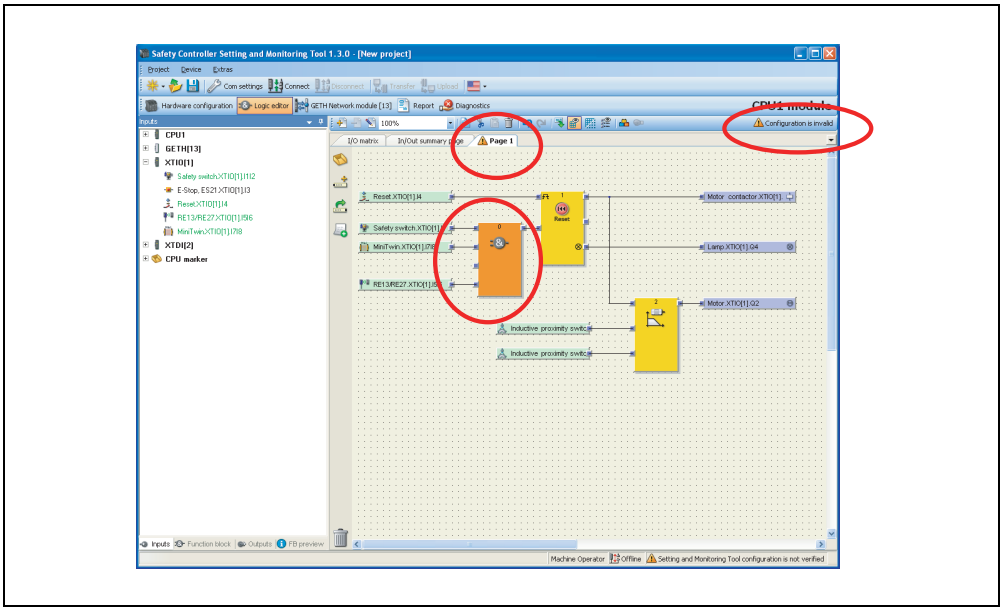

As long as the configuration is invalid, it is not possible to start the simulation mode or to transfer the configuration to the MELSEC-WS safety controller.

How to correct an invalid configuration:

- ➢ Connect all unconnected function block inputs. As soon as all function blocks are connected correctly, they will be displayed yellow and the invalid warnings will disappear.

ATTENTION

Check your application thoroughly for correctness!

The Setting and Monitoring Tool checks only for connection errors in your logic program. You are responsible to check whether your application conforms to your risk analysis and avoidance strategy and also fulfils all applicable standards and regulations. Otherwise the operator of the machine will be in danger.

5.6.4 Inputs and diagnostics bits of the main module in the logic editor

On the Inputs and Diagnostics tabs in the logic editor, the main module provides the following inputs and diagnostic bits:

Logical 0 and Logical 1

The Logical 0 input can be used to set a function block input permanently to 0 (Low). Respectively the Logical 1 input can be used to set a function block input permanently to 1 (High). This may be necessary to achieve a valid logic configuration if there are function block inputs that are not used but can not be disabled.

Configuration is valid

This diagnostics bit is high if the configuration on the main module is valid.

Module power supply is OK

This diagnostic bit is high if there is no error on the supply voltage for the main module.

Flexi Line Teaching required

This diagnostics bit is high if it is necessary to teach a Flexi Line system.

Verify status

This input is High if the configuration is verified (CV LED of the CPU module is static yellow on).

First logic cycle

This input is High for the very first logic cycle after every transition from the Stop state to the Run state. For all following logic cycles it remains Low. This input can be useful to trigger initialization functions in the logic program.

Simulation bit

The following table shows compatible combinations of CPU modules and Setting and Monitoring Tool when the simulation bit is used.

Table 4-1: Compatible CPU module and Setting and Monitoring Tool

Setting and Monitoring Tool software version	Compatible revision number of the CPU module	Compatible firmware version of the CPU module
V1.7.0*1	Revision 3.xx	V3.02 or later
V1.9.1 or later	No restrictions	

*1 The simulation bit cannot be used with Setting and Monitoring Tool with the software version earlier than V1.7.0.

Flexi Link status bits

Note In a Flexi Link system additional CPU status bits are available. For a description of these status bits see Section 7.4.7.

Status EFI1 and Status EFI2

These inputs are available only with CPU modules with an EFI interface, e.g. WS0-CPU1 or WS0-CPU3. You will find Status EFI1 and Status EFI2 as well as the equivalent EFI1 is OK and EFI2 is OK on the Diagnostics tab under the main module.

The inputs are set to Low as default.

The input is set to High if …

- EFI input and output process data exchange to all EFI devices that are expected according to the configuration for the EFI interfaces (EFI1, EFI2) is started and faultless, or
- no EFI devices are expected according to the configuration.

The input is set to Low again if an error is detected at the EFI input/output process data exchange to any of the EFI devices (e.g. communication interruption).

Note With AOPD senders there is no EFI process data exchange. Therefore a communication error will not occur with these devices, i.e. a communication interruption can not be detected.

5.6.5 EFI I/O error status bits in the logic editor

An I/O error status bit for each connected SICK EFI-compatible device or Flexi Link station is available in the **Inputs** tab of the **Logic editor** under the respective SICK EFI-compatible device or Flexi Link station and can be used as input for the logic programming. The I/O error status bit is High if the data or process image of the connected SICK EFI-compatible device or Flexi Link station is set to Low. This may be the case e.g. if an error has been detected or if the Flexi Link station is in the Stop state or being reconfigured.

Table 5: Meaning of the EFI I/O error status bits

Status bit	Value	Meaning
I/O error	Low	The corresponding SICK EFI-compatible device or Flexi Link station is error-free (e.g. in the Run state).
	High	The process image of the corresponding SICK EFI-compatible device or Flexi Link station is set to Low due to one of the following reasons: • Error detected on the SICK EFI-compatible device • The Flexi Link station is not in the Run state. • Suspended Flexi Link station has been found. • Flexi Link station with different Flexi Link ID found

See also Section 7.4.7.

5.6.6 Module input and output status bits in the logic editor

The input and output status of the connected network modules and safety I/O modules is available in the **Diagnostics** tab of the **logic editor** and can be used as input for the logic programming. In some applications an evaluation of this status information can be important in order to specify the behaviour of the logic functions of the safety controller. The input status specifies whether the data transferred from the input device to the CPU module are:

- Low, because this is the output value at the input device or
- Low, because there is a fault at the input device.

Table 6: Meaning of the module status bits

Status bit	Value	Meaning
Status input data	Low	One or more input bits of the corresponding module are set to Low due to an detected error (e.g. cross-circuit detected or communication failure detected), meaning that the input bits may have different values as in error-free operation.
	High	The inputs of the corresponding module are error-free.
Status output data	Low	For one or more outputs of the corresponding module an error has been detected (e.g. overload detected, short circuit detected or communication failure detected), meaning that the outputs may have different values as in error-free operation.
	High	The outputs of the corresponding module are error-free.

Note The input and output status for the WS0-XTIO and WS0-XTDI modules is available only with firmware version V2.00 and higher.

5.6.7 CPU markers

CPU markers are available as inputs and outputs in the Logic editor. They can be used e.g. for the creation of logic loop backs or to connect an output of a function block that is placed on one page of the logic editor to an input of a function block on another page of the logic editor.

A CPU marker consists of an output marker and an input marker. The input marker always takes the same value (High or Low) as the corresponding output marker with a delay of one logic execution time.

ATTENTION

Take the delay caused by CPU markers into account!

CPU markers always cause a delay of one logic execution time, because the input marker always uses the value of the output marker in the previous logic cycle. The resulting delay must be considered for the response time calculation and for the functionality.

How to use a CPU marker:

- Connect a CPU output marker (e.g. Marker 0.0) from the **Outputs** tab of the logic editor to the function block output that you want to use. Each CPU output marker can be used only once in a project.
- Connect the corresponding CPU input marker (e.g. Marker 0.0) from the **Inputs** tab of the logic editor to the function block input where you want to use the signal from the first function block as shown in the following screenshot. CPU input markers can be used several times in a project.

Figure 28:
Example for the usage of a CPU marker

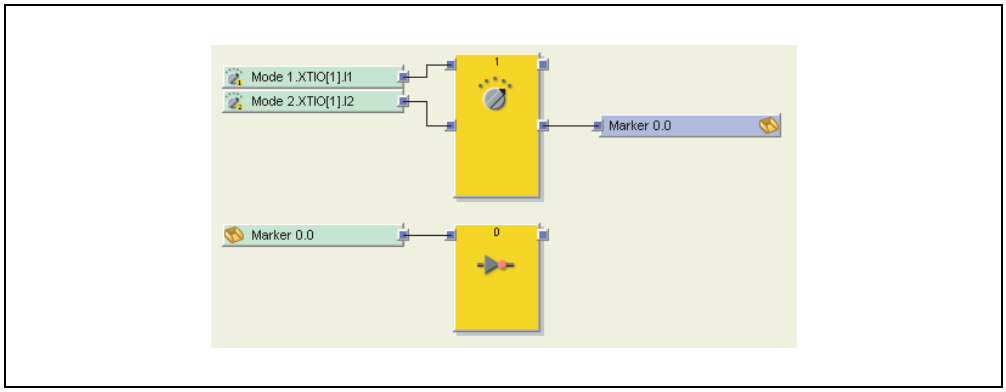

- The usage location of the CPU marker can be checked. Right click the CPU marker and select the page to be checked from **Used on page** in the context menu. Then the CPU markers in the selected page will be highlighted. Clicking in the logic editor and switching the page return to the normal display.

5.6.8 Jump addresses

Jump addresses can be used basically in the same way as CPU markers. They consist of a source jump address and a destination jump address. The destination jump address takes the same value (High or Low) as the corresponding source jump address without delay – provided that it is not a loop back. In this way, jump addresses differ from CPU markers.
A maximum of 256 jump addresses can be used in a project.

ATTENTION

Take logic loop backs into account!

A logic loop back is created if a function block input is connected to a destination jump address and the related source jump address is connected to an output of the same function block or to an output of another function block that has a higher function block index (the function block index is displayed at the top of each function block and shows the function block's position in the logic execution sequence). In this case, the logic result from the current logic cycle is only available at the destination jump address in the following logic cycle, i.e. with a delay of the logic execution time. If a jump address causes a loop back, this is indicated automatically by an additional clock symbol shown on the destination jump address icon. The resulting delay is equal to the execution time and must be considered for the response time calculation and for the functionality.

Figure 29:
Example of jump addresses with and without loop back

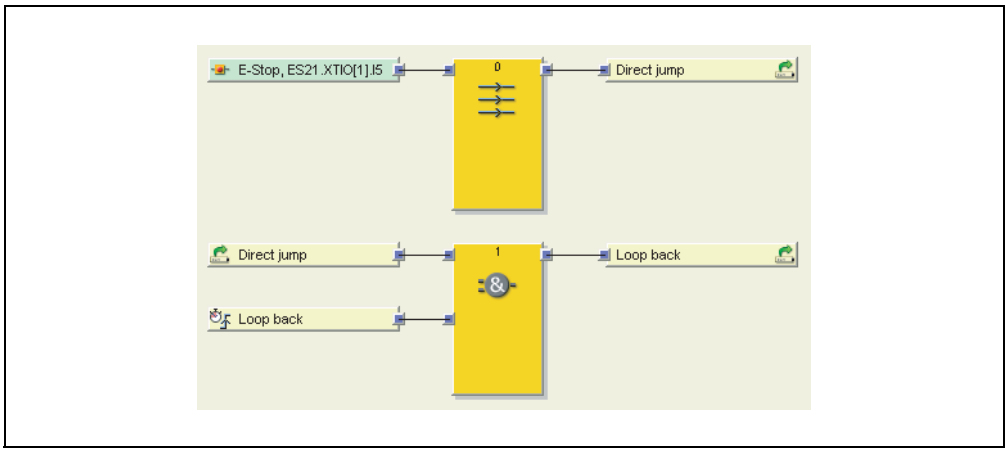

How to use a jump address:

- First add a source jump address per drag & drop to your project. A dialog opens where you must enter a label for the new source jump address. Each source jump address label must be unique and can be used only once in a project. Typically, a source jump address is connected to any function block output.
- Then add one or several destination jump addresses per drag & drop. A dialog opens, where you can select the correspondent source jump address for the new destination jump address from the list of existing source jump address labels. A source jump address can have several destination jump addresses in a project. Typically, a destination jump address is connected to any function block input.
- When jump addresses are used, jump labels are displayed in Jump address on the Inputs/Outputs tab.

Figure 30:
Jump address display on the Inputs/Outputs tab

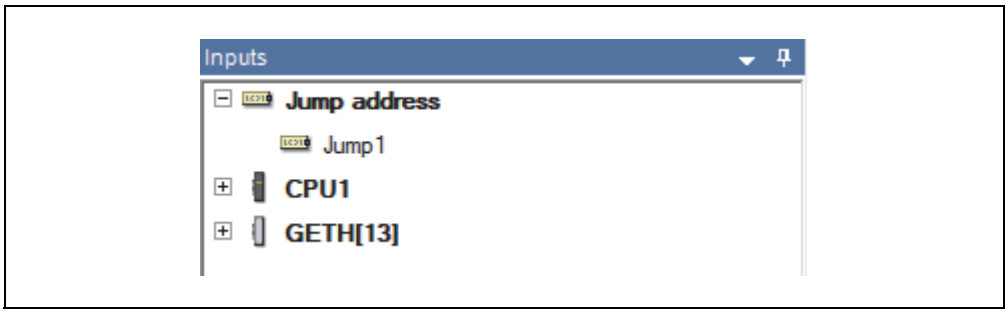

5.6.9 I/O matrix

The logic editor's **I/O matrix** file card displays which inputs have an effect on which outputs. This can be useful to check whether your logic program is complete.

A green field indicates that the respective input has an effect on the respective output; a white field indicates that there is no relation between this input and output.

Figure 31:
I/O matrix in offline mode

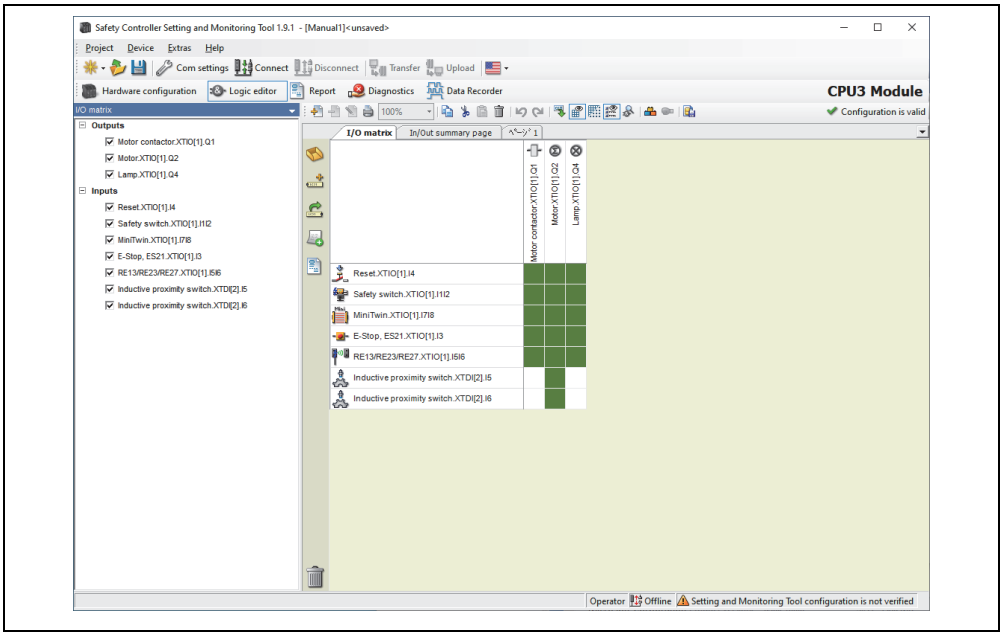

In the **I/O matrix** window, all inputs and outputs are listed. By checking or unchecking the checkboxes you can select which inputs and outputs shall be displayed in the I/O matrix. This can be useful in complex projects with many inputs and outputs to condense the displayed information to the most important aspects.

I/O matrix in simulation mode

In simulation mode (see Section 9.14), the I/O matrix displays the values of the used inputs and outputs. High inputs and outputs are displayed green. By clicking on an input you can toggle its value between High and Low and monitor the effect on the output values.

Figure 32:
I/O matrix in simulation mode

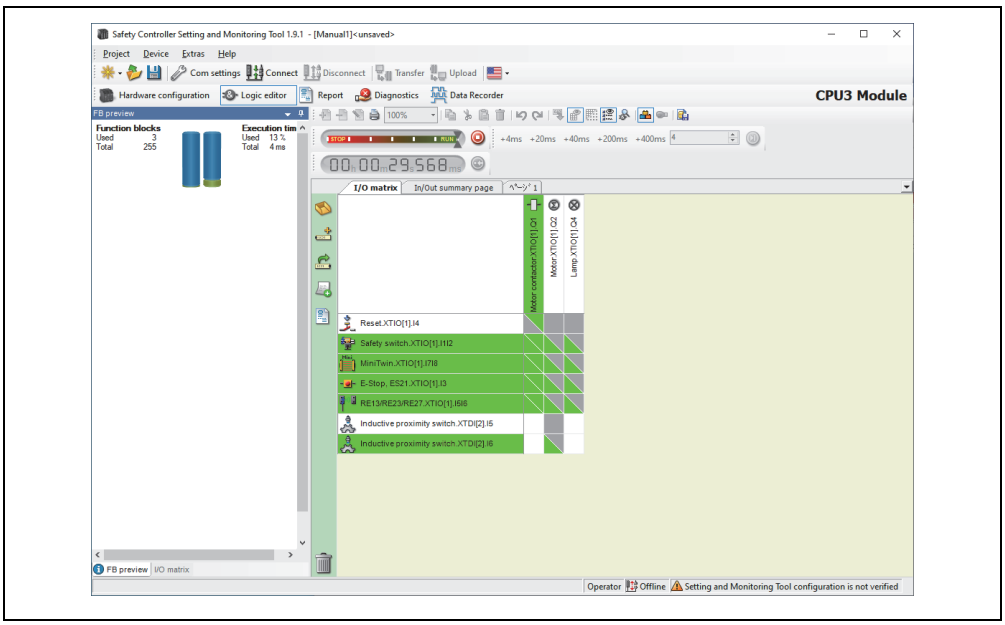

Exporting the I/O matrix to a CSV file

The I/O matrix for all pages set in the logic editor can be exported to a CSV file (UTF-8 encoding).

- Click the **Export I/O matrix as CSV file** icon ( ) to open the save file dialog, and specify a location to save the file.
- A CSV file encoded in UTF-8 is generated.

Figure 32-1
Export I/O matrix in CSV format

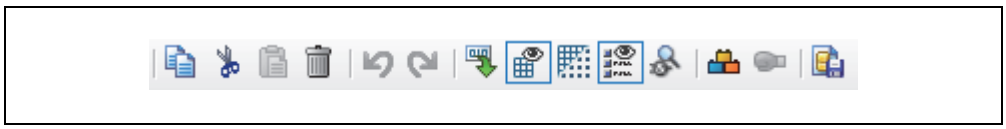

5.6.10 Tag name editor

The Tag name editor is the central place where you can edit all tag names in your project. To open the tag name editor either click on the **Edit tag names** button in the **Hardware configuration** view or click on the **Open dialog to edit logic result markers** button in the Logic editor toolbar.

Figure 33:
Tag name editor

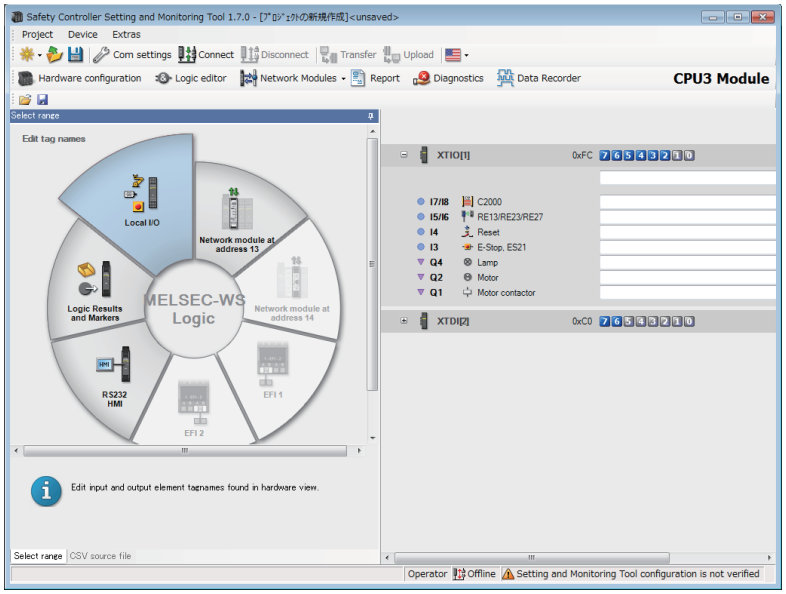

The different types of tag names in the name editor

- **Logic results and markers**: Tag names in the logic editor (CPU module)
- **Local I/O**: Input and output element tag names in the hardware view (safety I/O modules)
- **Network module at address 13/14**: Input and output data set tag names (network modules)
- **EFI1/EFI2**: Input and output tag names for devices on EFI interface 1 and 2
- **RS232 HMI**: RS-232 I/O tag names

The tag names of the selected type are listed in a tree view on the right side of the screen.

If a device type is not available in your project (e.g. no SICK EFI-compatible device connected), then the corresponding section is displayed grey, i.e. inactive.

How to edit the tag names:

➢ Click on one of the active sections on the left side to choose the device type whose tag names you want to edit:

➢ Navigate through the tree view on the right side to select the bit whose tag name you want to edit and enter the desired name in the input field.

5.6.11 Import and export tag names

With the aid of the **Import tag names** and **Export tag names** buttons at the top left of this window you can save the tag names as a text file in the CSV format (comma separated values) or import tag names from a CSV file or Excel® file.

Table 7:
Buttons for exporting and importing tag names

Symbol	Meaning
	Import tag names
	Export tag names

5.7 Report view

In the **Report** view, a comprehensive report on the current project and all configuration settings including the logic program and detailed wiring information is available. You can individually configure the contents of the report.

Figure 34:
Report view

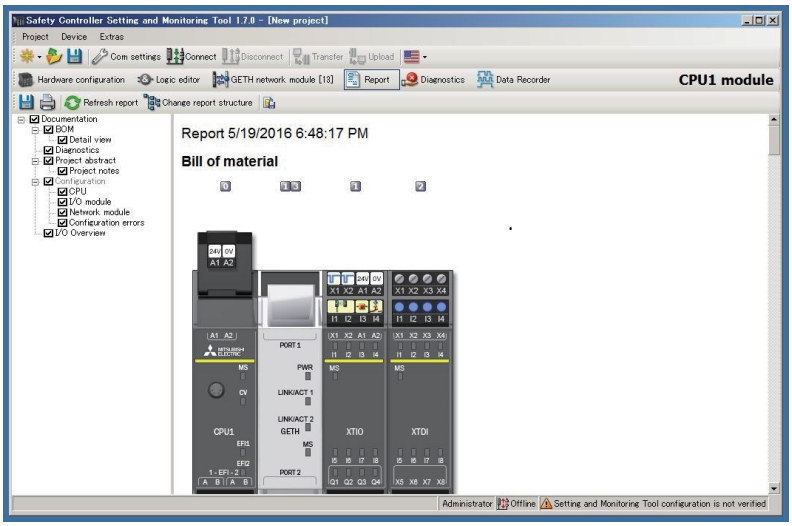

The information to be summarized in the report can be selected individually from an expandable selection list on the left-hand side. The selection is made by activating or deactivating the check boxes.

The toolbar in the **Report** view contains the following commands:

- **Save**: Stores the report in PDF format on a data medium.
- **Print**: Open the report in PDF format. To this purpose, a PDF viewer (e.g. Acrobat Reader Ver.10.0 or later) must be installed on your computer.
- **Refresh report**: Updates the report after changing the report structure.
- **Change report structure**: Switches between a hardware oriented and a function oriented report structure.

Note Detailed information on using the wiring information at the end of the report is available in the Safety Controller User's Manual.

You will find example application reports in the annex of this manual (see Section 15.1).

Exercise for the Report view

- ➢ Open the **Report** view by clicking on the **Report** button.
- ➢ Use the **Change report structure** button to choose one of the two different report structures (hardware- or function-oriented).
- ➢ Activate or deactivate the check boxes for the components that shall be included in the report in the selection list on the left-hand side.
- ➢ After you have completed your selection, click **Refresh report**. The report is now assembled and displayed in the right-hand window section.

How to save or print a report:

The report can be printed or saved as PDF.

- ➢ To save the report as PDF, click on the **Save** button.
- ➢ To print the report, click on the **Print** button. A PDF preview of the report will be created that you can subsequently print.

5.8 Diagnostics view

Once you have completed your project and connected to your MELSEC-WS safety controller, you can perform a diagnostics on your system. In the **Diagnostics** view, a complete history of all messages, information, warnings and error messages of a connected MELSEC-WS safety controller is available in the upper part of the window. If you click on one of the entries in the list, details on the selected message are displayed in the lower part of the window.

Figure 35:
Diagnostics view

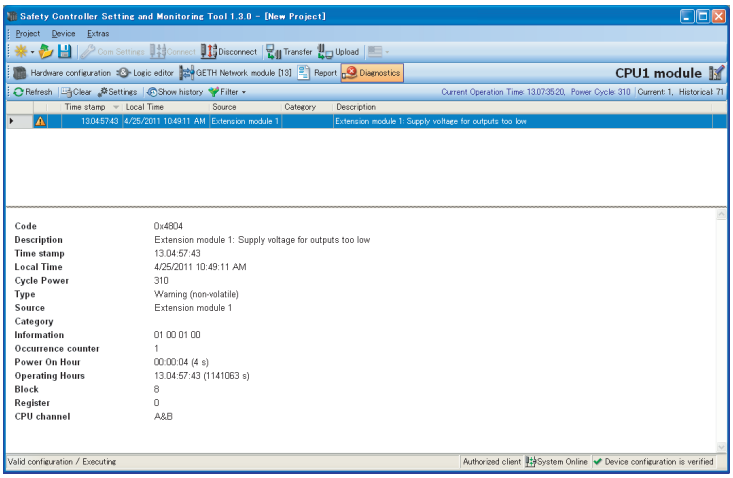

Table 8:
Meaning of the diagnostics information

Keyword	Description
Code	Hexadecimal error code
Description	Error description
Time stamp	Total CPU module operation time at the time of error (days:hours:min:sec)
Local time	Time when error occurred (PC system time). This value is not displayed for historical errors.
Cycle power	Total number of times the CPU module has been switched on
Type	Error type (e.g. information, warning, recoverable error, critical error)
Source	Module that detected the error
Category	Part of the module that detected the error
Information	Internal information about the error
Occurrence counter	Number of times this error has occurred. If an error occurs several times in a row, only the last occurrence will be recorded and the occurrence counter is increased.
Power on hour	Total time since the last power-on of the CPU module. This value is reset at every restart.
Operating hours	Total power-on time of the CPU module
Block	Diagnostics memory area in the CPU module. 8 = RAM (volatile, error occurred within the current power-on cycle) 88 = EEPROM (non-volatile, error occured in a previous power-on cycle)
Register	Index in the diagnostics memory area
CPU channel	Internal hardware channel (A or B) of the module that detected the error

Note For a list of the most important error codes, possible causes and potential rectification measures please see the Safety Controller User's Manual.

How to perform diagnostics:

- Click on the **Diagnostics** button in the menu bar to open the **Diagnostics** view. In the toolbar, the following commands are available:

Figure 36:
Toolbar in the diagnostics view



- Click on **Refresh** to read the current message list from the system.
- Using the **Clear** button you can delete all messages stored in the system. You must be logged in as Administrator.
- Under **Settings** you can configure an automatic refresh of the diagnostics and the time interval. In the **Diagnostic Settings** dialog, activate the **Automatic Refresh** checkbox and enter the desired refresh interval in seconds.
- Using the **Show history** button, you can display or hide older messages still stored in the MELSEC-WS safety controller.
- The **Filter** pull-down menu enables you to display or hide different types of messages. In the menu, click on the different message types to activate or deactivate them.

Figure 37:
Filtering the diagnostics messages

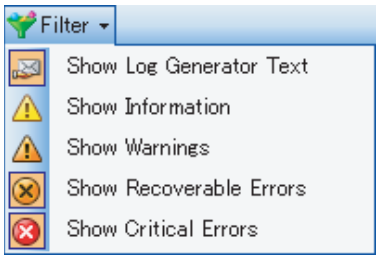

Note To save or print the diagnostic messages you can use the Report function (see Section 5.7).

Note Change the safety controller to the Stop state before clearing the diagnostic results.

5.9 Data recorder view

Once you have completed your project and established a connection to your MELSEC-WS safety controller, you can record input and output signals. Various selection windows area available in the Data recorder view for this purpose.

Figure 38:
Data recorder view

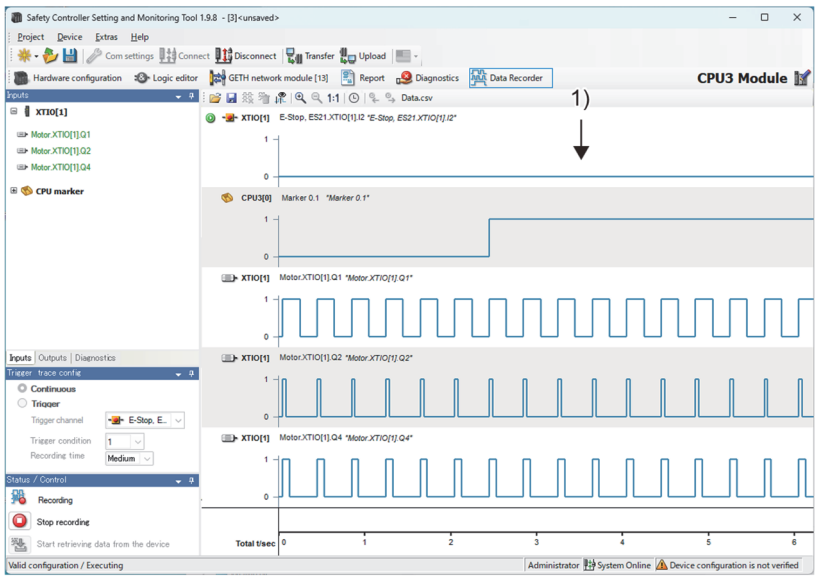

The **Data recorder** view contains the following windows and elements:

- Selection windows for the **Inputs** or **Outputs** on which the signals are to be recorded. For this purpose drag the required inputs and outputs from the selection window to the data display window.
- **Trigger trace config** selection window: You can record data either continuously or only once a specific trigger condition is met.
- **Status/control** selection window: Is used to start and stop the recording. In addition, the data recorder configuration can be read from the device or transferred to the device here.
- Data display window 1) where the signals recorded on the inputs and outputs are displayed. When the icon that displays the time is enabled, the bottom of the graph will display the **Time**. When it is disabled, the **Total t/sec** will be displayed.
- Toolbar: An icon for importing, exporting, and deleting recorded data, an icon for increasing or reducing the size of the view, an icon for resetting it its original size, and an icon for displaying the time are available. In addition, you can show and hide markers using the toolbar. You can use the markers, e.g. to determine the intervals between signal changes.

Recording data

To record data the data recorder configuration in the device and in Setting and Monitoring Tool must match. With the aid of the buttons in the **Status/control** selection window you can transfer the data recorder configuration either from Setting and Monitoring Tool to the device or read it from the device.

If you have loaded the configuration from the device into Setting and Monitoring Tool, you can then start the recording using the **Start recording** button in the **Status/control** selection window.

For this purpose Setting and Monitoring Tool must be connected to the device.

You can also prepare a dedicated data recorder configuration that can then be transferred to the device. For this purpose drag the inputs and outputs with the signals to be recorded from the Inputs/Outputs selection window to the data display window.

You can then define in the **Trigger trace config** selection window when the data recording is to start:

- Continuous: The recording starts immediately after you click the **Start recording** button.
- Trigger: After you have clicked the **Start recording** button the recording only starts once the trigger condition you have defined is met. For this purpose select one of the inputs or outputs used from the list as a **Trigger channel** and define the trigger condition, i.e. whether the recording is to start when the selected trigger channel has the value 0 or the value 1.
  In the **Recording time** setting, specify a duration for recording changes in the signal. (Setting and Monitoring Tool with the version V1.9.1 or later supports this setting.)
  The duration is selectable from **Long**, **Medium**, and **Short**. A specific duration cannot be specified because it varies depending on the following:
  - The number of changes in the signal that occur during the period from the occurrence of a trigger event to the end of recording
  - The duration of time from the start to the end of recording
  - The number of changes in the signal that occur during the period from the start of recording to the occurrence of a trigger event

In Setting and Monitoring Tool with the version V1.7.0 or earlier, the signals are not recorded continuously but only on a change in signal when the **Only record new values** save option is enabled. For this reason, signals can be recorded for a long duration.

In Setting and Monitoring Tool with the version V1.9.1 or later, however, the signals are recorded continuously. When a long-duration recording is necessary, select **Long** in the **Recording time** setting.

6 Connecting to the MELSEC-WS safety controller

6.1 First steps for establishing a connection

This chapter describes how to establish a connection between the MELSEC-WS safety controller and a PC or notebook.

6.1.1 Connecting the PC to the MELSEC-WS safety controller via RS-232

- Connect a PC or notebook to the RS-232 interface of the CPU module.
- Power on the MELSEC-WS safety controller.
- Open the Setting and Monitoring Tool installed on the PC.
- Click on **Com settings** to ensure the correct communication interface has been selected. The following dialog appears:

Figure 39:
Connection settings dialog

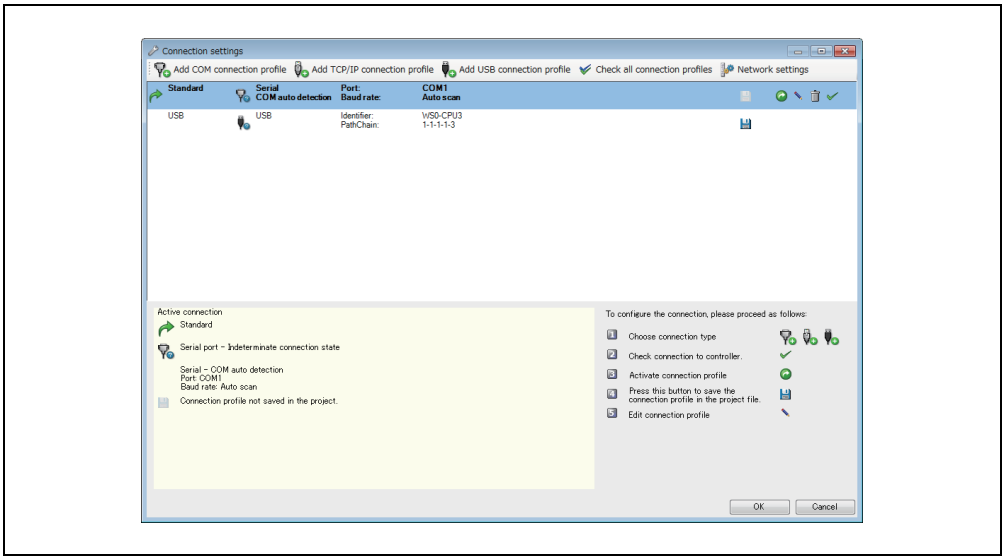

- To edit the settings click on the pencil icon to the right. The following dialog appears:

Figure 40:
Modify profile dialog

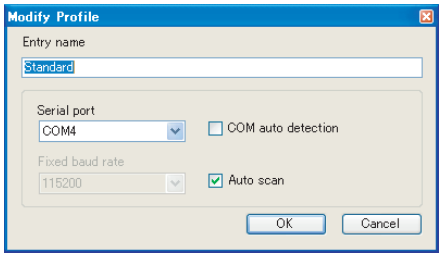

- Modify the settings if required.
- Click **OK**. The **Connection settings** dialog closes.
- Click on **Connect** The Setting and Monitoring Tool will search for connected MELSEC-WS modules and load the hardware configuration into the hardware configuration dialog. Once all modules have been identified, the Setting and Monitoring Tool will ask whether the configuration shall be uploaded.
- Click **Yes** to upload the configuration.

As an example, the following hardware configuration may appear:

Figure 41:
Hardware configuration dialog (example)

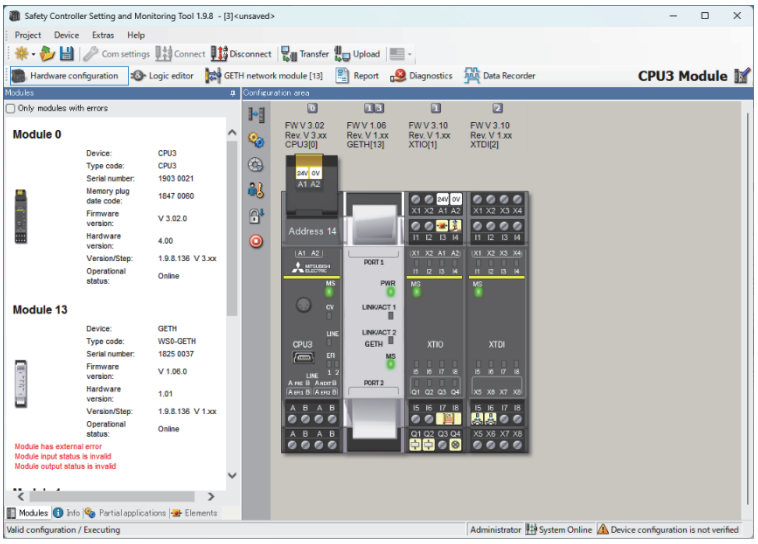

Note In Setting and Monitoring Tool with the version V1.9.8 or later, when logging on as Administrator, Warning dialog which warns default password change will be displayed.

➢ Click **Disconnect** to go into the offline mode if you want to change the configuration of the MELSEC-WS modules. Alternatively, you can click on the **Online edit mode** button to make minor changes without having to disconnect each time.

Note Configuration and verification of devices that are connected to the MELSEC-WS safety controller is generally not carried out using the Setting and Monitoring Tool, even if they can be addressed via the RS-232 interface of the CPU module. These devices have their own mechanisms for configuration and verification.

An exception is SICK EFI-compatible devices connected to the WS0-CPU1 or WS0-CPU3 module (EFI elements from the elements window). These devices can be configured and verified by directly double-clicking the icon in the Setting and Monitoring Tool.

Note Before removing the RS-232 USB converter (WS0-UC-232A), disconnect the PC from the MELSEC-WS safety controller.

6.1.2 Online status and background color

The background color displayed in the Setting and Monitoring Tool indicates the current online or offline status of the MELSEC-WS safety controller as shown in the following table:

Table 9:
Meaning of the background color

Background color	Status	Configuration status in the Setting and Monitoring Tool
Light yellow	Offline	Any
Blue	Online	Invalid and/or different to the device configuration
Grey	Online	Valid and equal to the device configuration

6.2 Editing the communication settings

Using the **COM settings** command, you can create, edit and delete connection profiles.

To edit the connection profiles, the Setting and Monitoring Tool must be in offline mode.

➢ If you are in online mode, click on the **Disconnect** button to change into offline mode.

➢ Click on **COM settings**. The dialog for editing the connection profiles is opened:

Figure 42:
Connection settings dialog

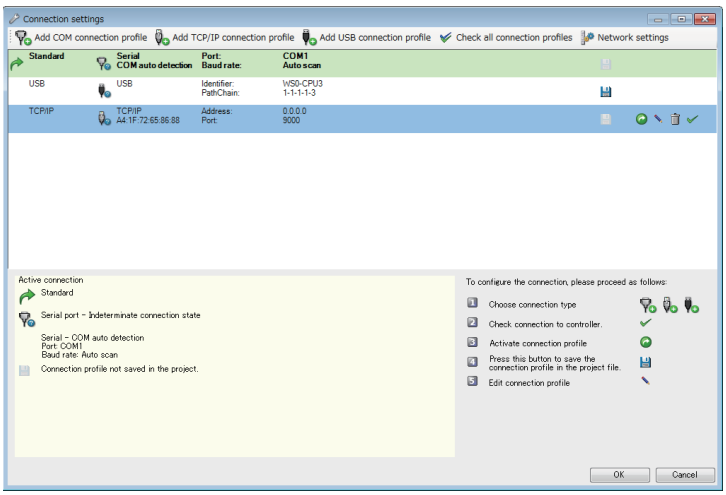

All existing connection profiles are displayed here. The currently activated profile is marked light green and with bold typeface; the profile selected for editing is marked blue.

At the bottom of the dialog an overview of the current settings is displayed.

The symbols for editing the profiles have the following meaning:

Table 10:
Symbols for editing the connection profiles in the Connection settings dialog

Symbol	Meaning
	Save profile with the current project
	Activate profile
	Edit profile
	Remove profile
	Check connection

How to add a COM profile (serial port):

➢ Click on the **Add COM profile** button. The **Create new profile** dialog is opened.

Figure 43:
Create new profile dialog (serial port)

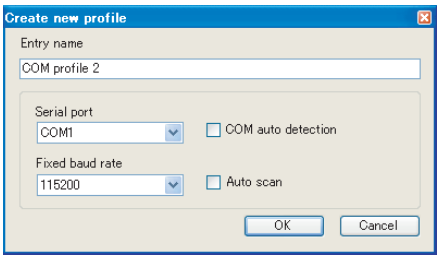

➢ Enter a name for the new profile.

➢ Select the serial port for the new profile or activate the **COM auto detection** checkbox.

➢ Select a fixed baudrate or activate the **Auto scan** checkbox.

➢ Click **OK**. The dialog is closed and the new profile is displayed in the list.

➢ To activate the new profile, select it using the left mouse button and click on the green arrow symbol on the right. From now on, the Setting and Monitoring Tool will use this profile.

How to add a USB profile:

➢ Click on the **Add USB profile** button. The **Create new profile** dialog is opened.

Figure 44:
Create new profile dialog (USB)

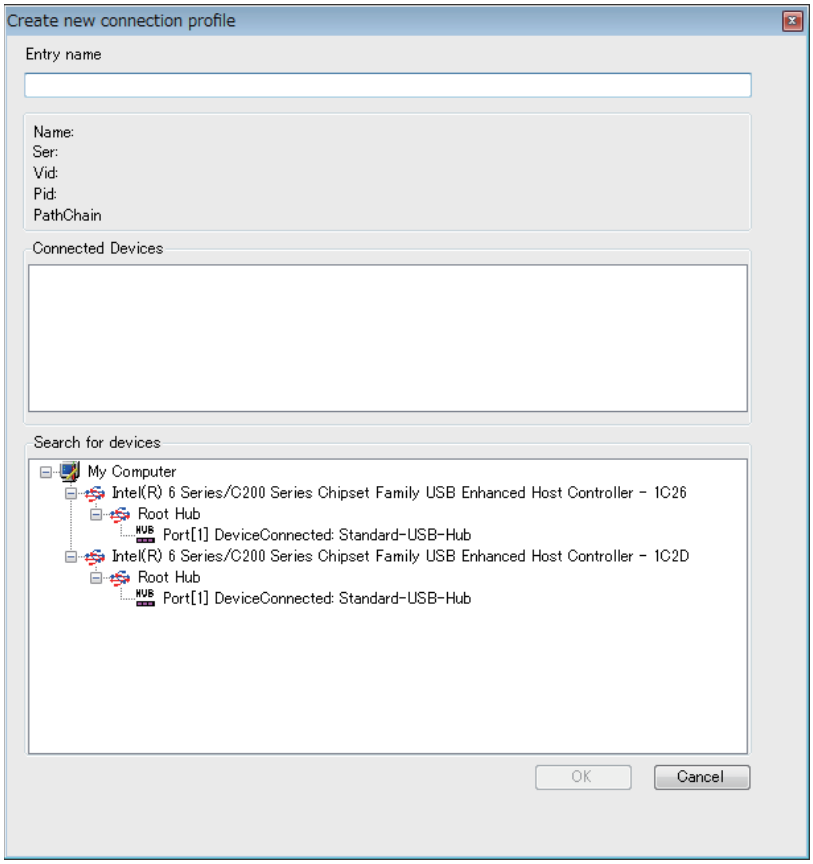

➢ Enter a name for the new profile

➢ Select a CPU module to be conneted in "**Connected Devices**"

➢ Click **OK**. The dialog is closed and the new profile is displayed in the list.

➢ To activate the new profile, select it using the left mouse button and click on the green arrow symbol on the right. From now on, the Setting and Monitoring Tool will use this profile.

How to add a TCP/IP profile:

Note To create a TCP/IP profile it is necessary that your MELSEC-WS safety controller contains an Ethernet interface module (WS0-GETH) which must be configured with a valid IP address for your network. For detailed instructions on the Ethernet interface module configuration please see the Safety Controller Ethernet Interface Module User's Manual.

➢ Click on the **Add TCP/IP profile** button. The **Create new connection profile** dialog is opened.

Figure 45:
Create new profile dialog (TCP/IP)

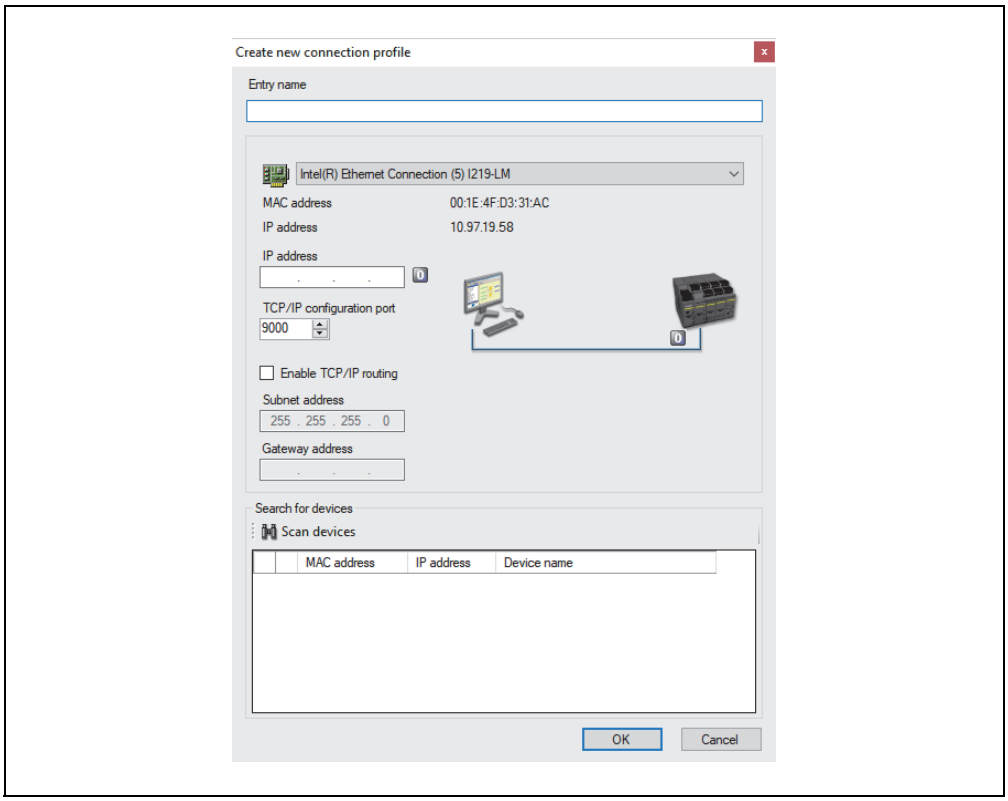

➢ Click on the **Scan** button. Your network is scanned for connected network modules and the network modules found are displayed in the list.

Figure 46:
List of network modules found

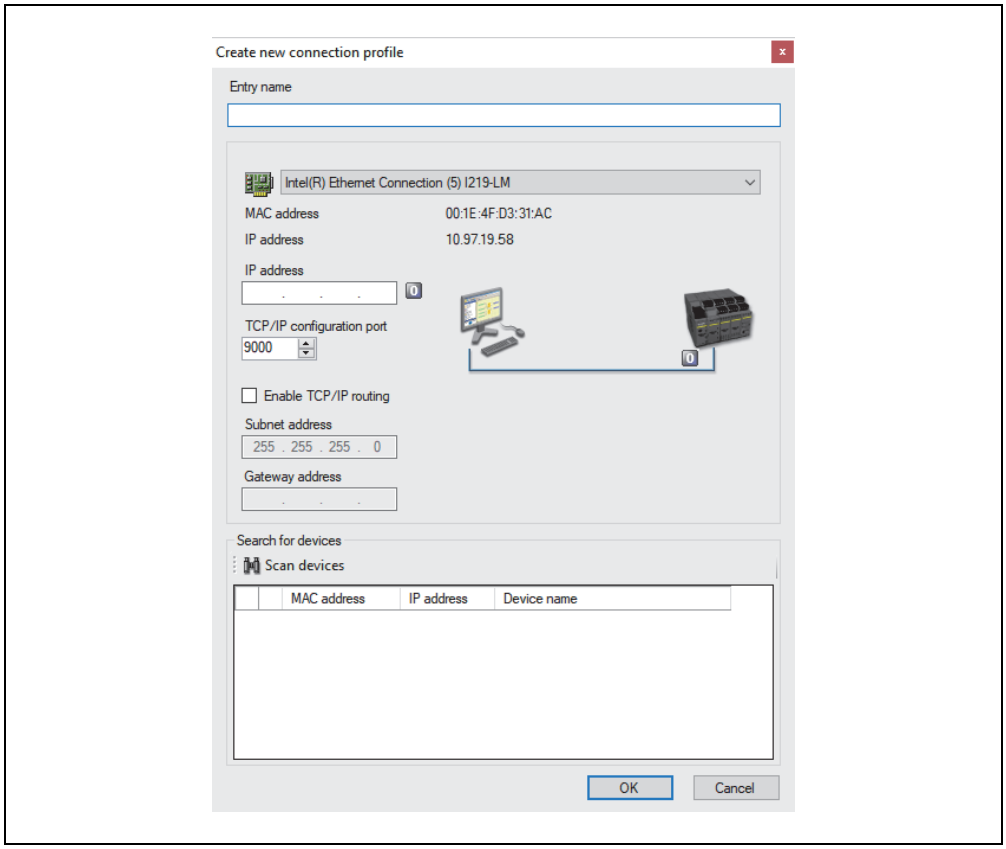

➢ Click on the desired network module. The IP address of the device is displayed in the **IP address** field.

➢ Enter a name for the new profile.

➢ If necessary, set **TCP/IP configuration port.**

➢ Click **OK**. The dialog is closed and the new profile is displayed in the list.

➢ To activate the new profile, select it using the left mouse button and click on the green arrow symbol at the right. From now on, the Setting and Monitoring Tool will use this profile.

How to check a profile:

➢ Click on the green tick on the right side of the profile to be checked.

➢ To check all profiles, click on the **Check all profiles** button.

The Setting and Monitoring Tool checks the connection settings and marks faulty profiles.

Table 11:
Status symbols for connection profiles

Profile type	Profile not checked	Profile OK	Profile faulty
Serial (COM)			
USB			
TCP/IP			

How to change the network settings of a network module:

- Click on the **Network settings** button. The **Network scan** dialog is opened.
- If necessary, select the correct network adapter from the dropdown list at the bottom of the dialog.
- Click on the **Scan** button. Your network is scanned for connected network modules and the network modules found are displayed in the list.

Figure 47:
List of network modules found

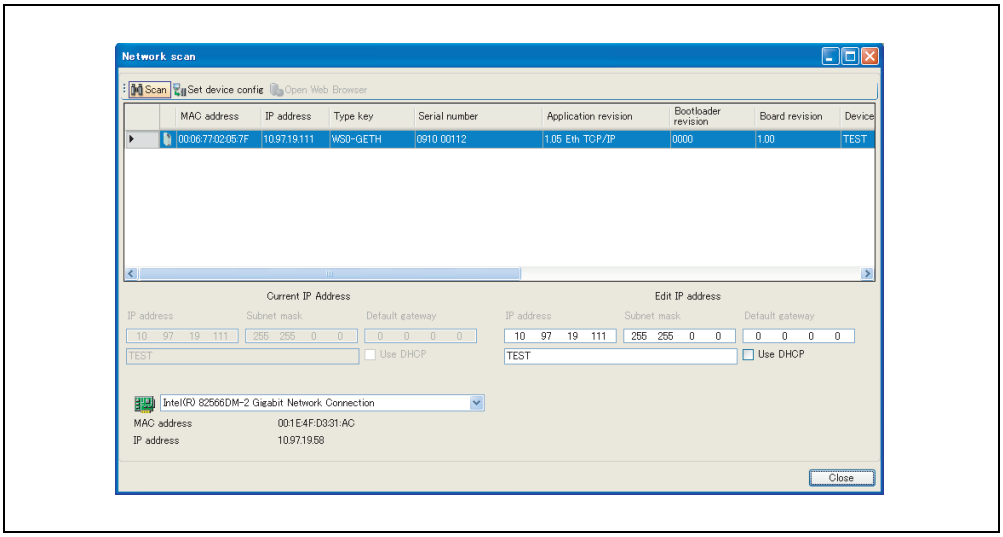

- Click on the network module you want to edit.
- Enter the new settings in the **Edit IP address** area.
- Click on the **Set device config** button to transfer the new settings to the device.

6.3 Establishing a connection with the MELSEC-WS safety controller

ATTENTION

Do not connect to the MELSEC-WS safety controller via the RS-232, the Ethernet interface and the USB at the same time!

The MELSEC-WS safety controller can only communicate with one instance of the Setting and Monitoring Tool at one time. Connecting to the safety controller using multiple instances of the Setting and Monitoring Tool, either on a single PC or multiple PCs, may result in inconsistencies of the configuration and the diagnostics as well as in operational errors.

➢ Click on the **Connect** button. The Setting and Monitoring Tool will try to connect to your MELSEC-WS safety controller using the currently activated connection profile.

If a connection is established successfully, the Setting and Monitoring Tool goes into online mode and you can perform the following activities depending on your user level:

- Log in (see Section 6.4).
- Transfer the configuration to the device, upload it from the device or verify the configuration (see Chapter 11).
- Run or stop the CPU module (see Section 12.1).
- Start the force mode (see Section 9.15).

6.4 User levels in the Setting and Monitoring Tool

If the Setting and Monitoring Tool is connected to the devices in a project (i.e. is in online mode), you can switch to the user levels of the Setting and Monitoring Tool. These user levels have different authorisations for the transfer of configurations to the devices:

Table 12:
User level authorisations

User level	Password	Authorisation
Operator	None	May create and edit configurations offline. Cannot connect to the system.(diagnostics only) Cannot transfer any configuration. Cannot verify a configuration.
Maintenance	Default: None (i.e. no login possible) Can be changed by Administrator.	May create and edit configurations offline. Can transfer verified configuration. Can connect to the system (transfer, diagnostics). Cannot verify a configuration.
Administrator	Default: MELSECWS Can be changed by Administrator.	May create and edit configurations offline. Can transfer verified and non-verified configuration. Can connect to the system (transfer, diagnostics). Can use Force mode. Can verify a configuration.



ATTENTION

Switch to the user group Operator!

If you leave the PC connected to devices without personal attendance or supervision, you must log off from the user levels Maintenance or Administrator and switch to the user level Operator to make sure that no unauthorized person can transfer configurations to the devices!

Note The password protection relates to the configuration of the current devices. The password is saved in the memory plug. This means that the password will remain the same even if the CPU module is replaced.

How to change the user level:

- In the **Hardware configuration** view, click on the **Log in** symbol on the left side of the **Configuration area** while you are online. The **Change user group** dialog will open.
- Select the desired user level, enter the password and click on **Log On**.

How to assign or to change the password for a user level:

- Go into online mode.
- Open the **Hardware configuration** view.
- With the right mouse button, click on the CPU module.
- From the context menu, select the **Change password...** command. If you are not logged in as Administrator, you will be prompted to log in now.
- In the **Change password** dialog, select the user level for which you want to change the password, enter the new password twice and confirm with **OK**.

Note The password may consist of 8 characters maximally.

Figure 48:
Change password dialog

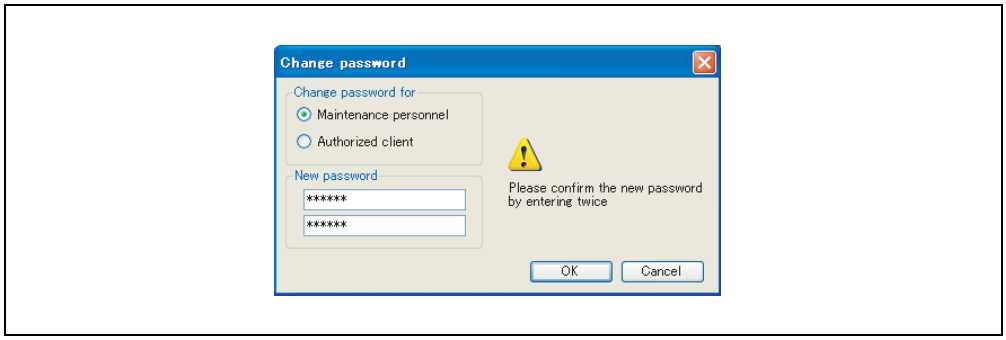

6.5 Identify project

The **Identify project** command is equivalent to the **Connect to physical device** command that can be executed upon program start of the Setting and Monitoring Tool.

- In the **Device** menu, choose the **Identify project** command. The current project will be closed.
- The Setting and Monitoring Tool will search for connected MELSEC-WS modules and load the hardware configuration into the **Hardware configuration** dialog. Once all modules have been identified, the Setting and Monitoring Tool will ask whether the configuration shall be uploaded.
- Click **Yes** if you want to upload the configuration.

7 Flexi Link

7.1 Flexi Link overview

Flexi Link allows you to combine up to four Flexi Link stations via EFI for safe data communication. Only WS0-CPU1 and WS0-CPU3 modules can be used in a Flexi Link system, the connection of WS0-CPU0 modules is not possible.
The process data of each station (inputs and outputs, logic results etc.) can be made available to all other stations in the Flexi Link system. The Teach function allows to temporarily deactivate single stations without impairing the function of the overall system.

Features

- Safe connection of up to four Flexi Link stations via EFI
- Connection via EFI1 or EFI1 and EFI2
- Transfer/receive up to 52 bit of information per station (26 bit per EFI channel)
- Each bit can be assigned a global tag name.
- Teaching simulates the presence of temporarily suspended (switched off) stations.
- Any station can be used as access point to address and configure the entire system with the Setting and Monitoring Tool.
- The configuration of the entire Flexi Link system is stored in a single project file.

7.1.1 System requirements and restrictions for Flexi Link

The minimum system requirements for Flexi Link are as follows:

Table 13: Minimum system requirements for Flexi Link

System component	Minimum version
Hardware	WS0-CPU1 or WS0-CPU3 with firmware version V2.00 or higher
Software	Setting and Monitoring Tool version 1.3.0 or higher

The Flexi Link system can be connected using only EFI1 or using both EFI1 and EFI2. The overall number of status bits per station that can be made available to the other stations in the Flexi Link system depends on the connection method:

Table 14: Available status bits depending on the connection method

Connection method	Available status bits per station
EFI1	26
EFI1+2	52

Note

- You can not use Flexi Link and EFI communication at the same time, i.e. it is not possible to connect other SICK EFI-compatible devices on the EFI2 connection while EFI1 is used for Flexi Link.
- The process data sent by any station are received almost simultaneously by all other stations. The processing (logic) in the individual stations is, however, not necessarily simultaneous, as the stations are not synchronized.
- The data on EFI1 and on EFI2 are consistent. The data on EFI1 and EFI2 can, however, be inconsistent for a short time, as they are transferred separately.

7.2 Function principle

The configuration of a Flexi Link project requires two steps.

- The first step is the configuration of the network settings and the Flexi Link address. Wiring errors or the presence of devices that are not suitable for Flexi Link projects are detected in this step automatically by the system.
- The second step is the configuration of the individual stations in the system: CPU module, safety I/O modules, connected elements, network modules, logic and the process image for the Flexi Link network.

7.2.1 Flexi Link address

The Flexi Link address is required by the Setting and Monitoring Tool to uniquely identify each of the up to 4 stations in a Flexi Link system. This is the first important setting in order to configure a Flexi Link system.

The Flexi Link address ranges from A to D and is freely configurable. For detailed information on how to assign Flexi Link addresses to connected stations please see Section 7.4.3.

7.2.2 Flexi Link ID

The Flexi Link ID is necessary for the stations in a Flexi Link network to communicate with each other. All stations in a Flexi Link system must have an identical Flexi Link ID in order to exchange their process image information. This ensures that only stations that belong to the same Flexi Link system can communicate with each other. If a differing Flexi Link ID is detected in a Flexi Link system, all connected stations will change into “Invalid configuration” mode (MS LED flashing ☀ red at 1 Hz).

The Flexi Link IDs are numeric values that are calculated from the default values for the process image. This means that a change of the default values for the process image of any station will change the Flexi Link ID of all stations. Adding or deleting a station will also change the Flexi Link ID of the system.

Note If a change is made to any station’s process image, you must transfer the new configuration to all stations (e.g. **Transfer all** in the Flexi Link network settings view). This will set all Flexi Link IDs simultaneously to the same value. Not doing so will lead to a Flexi Link ID mismatch in the system and thus interrupt the safety communication between the stations.

The Flexi Link IDs are a part of the configuration and are transferred and saved with the configuration in the memory plug of each connected WS0-CPU1 or WS0-CPU3 module.

The Flexi Link IDs for the current configuration in the Setting and Monitoring Tool are always displayed in the Flexi Link menu bar. The Flexi Link IDs that are currently stored in the individual stations are displayed in the Flexi Link **System overview** and compared to the Flexi Link ID of the project on the PC, while the station is connected. If the Setting and Monitoring Tool detects a Flexi Link ID mismatch, a warning sign is displayed. On the right side of the screen a recommendation is given how to proceed:

Figure 49:
Flexi Link IDs display in the Flexi Link System overview



The Flexi Link IDs are also displayed in the Flexi Link **Network settings** view.

If the configuration of any station in the Flexi Link system is changed in a way that affects the process image of the system (e.g. if a station is added to the system or if the default value for one of the transmitted bits is changed), then the Setting and Monitoring Tool calculates a new Flexi Link ID based on the changed process image. In this case you have to transmit the configuration to all stations in the system, not only to the station whose configuration you have changed. Otherwise the new Flexi Link IDs will be transferred only to this station while the other stations will keep the old Flexi Link IDs. The resulting Flexi Link ID mismatch between the stations will disrupt the process image communication in the system. If a differing Flexi Link ID is detected, no process image transfer between the stations is possible and all CPU modules (WS0-CPU1) in the system will show a recoverable error (MS LED flashing ☀ Red at 1 Hz and EFI1 and EFI2 LEDs will light up Red). Only configuration and diagnostics of the stations is still possible then.

For more information on how to correct a Flexi Link ID mismatch please see Section 7.5.

7.3 Getting started

This section describes how to set up a new Flexi Link system. In order to do this, you need to configure the hardware for your project first. You have two possibilities:

- You can first set up and wire the hardware, then connect your PC to the system and read in the hardware setup using the Setting and Monitoring Tool.
- If the required hardware is not available yet, you can set up the hardware configuration for your Flexi Link project in the Setting and Monitoring Tool and transfer the configuration later when you have assembled the hardware.

Either way, once the hardware configuration for your Flexi Link project is complete, you can proceed with the software configuration. The last step is to transfer the finished configuration to the stations, to verify the configuration of the stations and to run the system.

7.3.1 Connecting to an existing Flexi Link system

Step 1: Assemble and wire the hardware

➢ Set up the hardware for your Flexi Link system (WS0-CPU1 or WS0-CPU3 modules, safety I/O modules and connected devices such as sensors, switches, actuators etc.).

Note For information on wiring please see the Safety Controller User's Manual.

Step 2: Establish a connection to your Flexi Link system

➢ Connect a PC or notebook to the RS-232 interface of any CPU module in the system.

➢ Power on the Flexi Link system.

➢ Open the Setting and Monitoring Tool installed on the PC.

➢ If necessary, edit the communication settings (see Section 6.2).

➢ Click on **Connect** or choose the **Identify project** command from the **Device** menu. The Setting and Monitoring Tool will then scan the network for connected devices.

Note If the error message "No valid Flexi Link network found" appears, check whether each of your WS0-CPU1 or WS0-CPU3 in the system has at least the firmware version V2.00. The firmware version can be found on the type label of the module in the field Firmware version.

➢ Only if the connected CPU modules have been configured for Flexi Link before, they will have valid Flexi Link addresses. Otherwise, the Setting and Monitoring Tool will now open the Flexi Link **Network settings** view and list the stations found:

Figure 50:
Flexi Link Network settings without valid address assignment

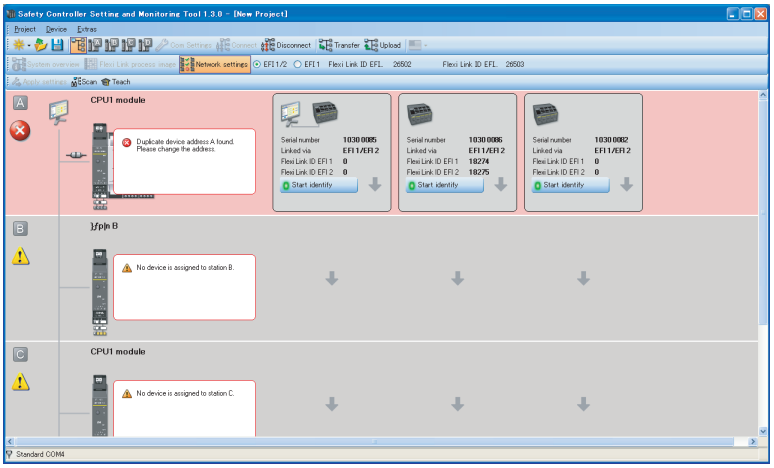

- Use the up and down arrow buttons or drag and drop the stations into the rows for Station A to D so that no two stations occupy the same address.
- There are two possibilities to identify each station:
  - Click on the **Start identify** button of one of the displayed stations. The corresponding station's MS and EFI1 LEDs will start flashing alternating with the EFI2 LED (2 Hz). You will need the password for Administrator. The default password is "MELSECWS". To stop the LED flashing, click the button again (it is now labeled **Stop identify**).
  - Check the serial number on the memory plug and compare it with the serial number shown in the Setting and Monitoring Tool.

Figure 51:
Apply settings button



- Click on the **Apply settings** button in the upper left hand corner of the screen. The Flexi Link addresses of the stations will be changed.

Figure 52:
Flexi Link Network settings with valid address assignment

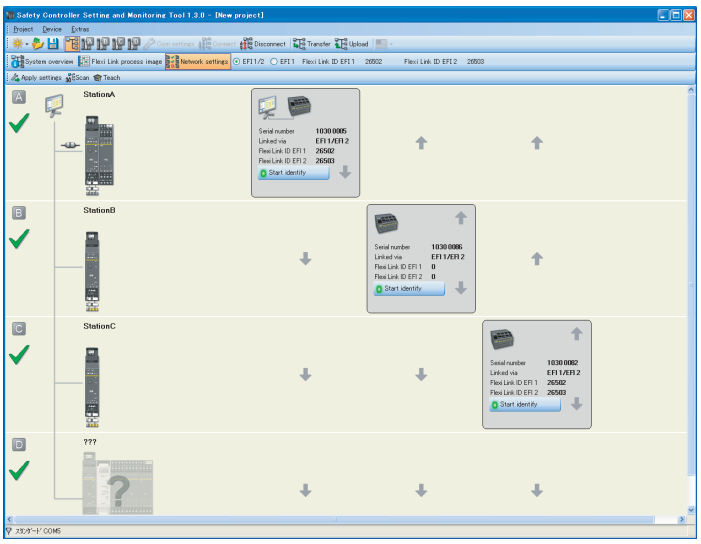

Step 3: Read in the hardware settings

➢ Click on the **System overview** tab. The following view opens:

Figure 53:
Flexi Link System overview

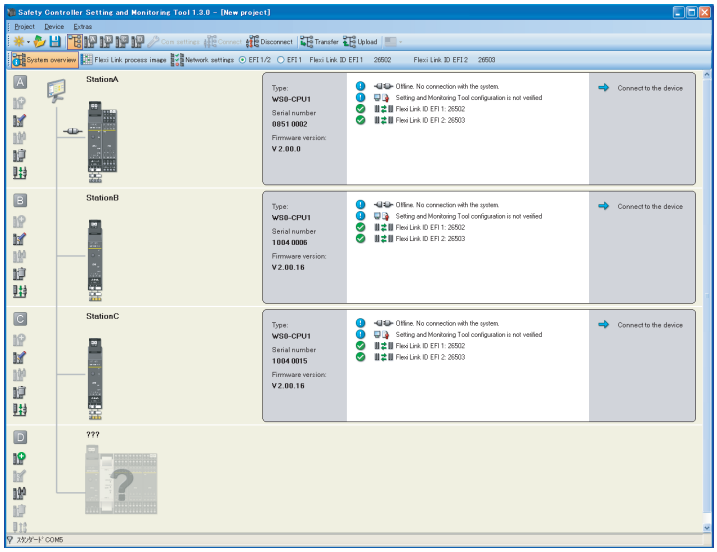

➢ Click on the **Upload** button. The Setting and Monitoring Tool will read in the hardware and configuration settings of all devices on this station.

➢ When the hardware configuration is complete, click **Disconnect**. You can now configure your project as described in Section 7.3.3.

Note The **Disconnect** command in the System overview will disconnect all Flexi Link stations simultaneously. The buttons for **Transfer** and **Upload** react the same way as well. If you switch to the view for an individual station, these buttons will affect only that station.

7.3.2 Setting up a Flexi Link project in the Setting and Monitoring Tool

If the required hardware is not available yet, you can set up the hardware configuration for your Flexi Link project in the Setting and Monitoring Tool.

- Open the Setting and Monitoring Tool on your PC or laptop.
- In the startup dialog, click on **Create new Flexi Link project** or choose from the **Project** menu the command **New** > **Flexi Link system project**. The Flexi Link **System overview** screen opens.

Figure 54:
Flexi Link System overview

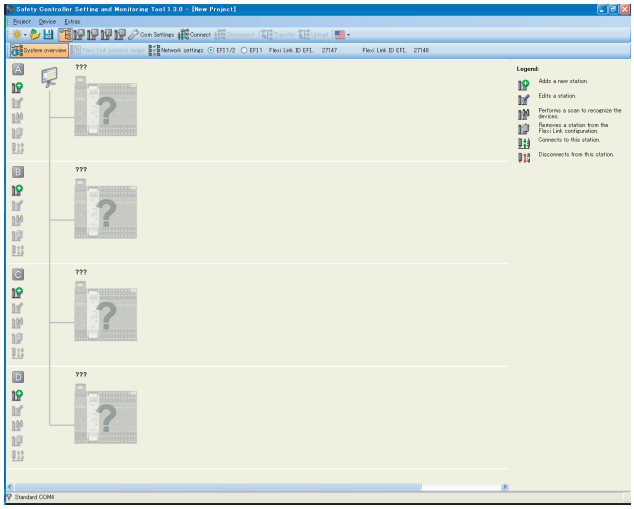

- Choose whether your Flexi Link system will be wired using only EFI1 or both EFI connections. EFI1 allows to exchange up to 26 bits per station, using both EFI1 and EFI2 each station can share up to 52 bits with the other stations.

Note You can change this setting any time later.

- Now add the first station to your project. Click one of the buttons for adding a new station on the left side of the screen. This will open the view for this individual station. Alternatively you can also switch to the view for an individual station using the **Station** buttons in the toolbar at the top of the screen.

Figure 55:
Flexi Link system overview and station buttons



- In the view for the individual station, add the desired hardware for this station as described in Section 5.5.1 and in Section 5.5.3.
- When the hardware configuration for the selected station is complete, use the **Flexi Link system overview** button in the toolbar to switch back to the Flexi Link system view.
- Then add the other required station(s) to your Flexi Link project as described above.
- When the hardware configuration of your Flexi Link system is complete, you can configure your project as described in the following section.

7.3.3 Flexi Link configuration

This section shows in detail how data can be shared between the single stations in a Flexi Link system.

Example: Simple Flexi Link project with two stations. An emergency stop button and a restart button on Station A will control two robots connected to Station A and Station B.

Setting up the hardware

- Create a new Flexi Link project (see Section 7.3.2).
- In the Flexi Link **System overview**, set the connection method to **EFI1+2** (setting it to **EFI1** will make no difference for this example project). Then click on the **Add a new station** button for Station A. The **Hardware configuration** view for Station A opens.
- Add a CPU1 or CPU3 and then an WS0-XTIO module for Station A.
- Connect a single channel emergency stop button to input I1 and a single channel reset button to input I2 of the Station A WS0-XTIO module.
- Connect a single channel robot to output Q1 and a lamp to output Q2 of the Station A WS0-XTIO module.
- Now click on the button for Station B in the toolbar. The **Hardware configuration** view for Station B opens.
- Add a CPU1 or CPU3 and then an WS0-XTIO module for Station B.
- Connect a single channel robot to output Q1 and a lamp to output Q2 of the Station B WS0-XTIO module.

Configuring the logic for Station A

- Click on the button for Station A in the toolbar. Then switch to the **Logic editor** view for Station A.
- Using the connected input and output elements on the WS0-XTIO module and a Restart function block, create the following logic configuration:

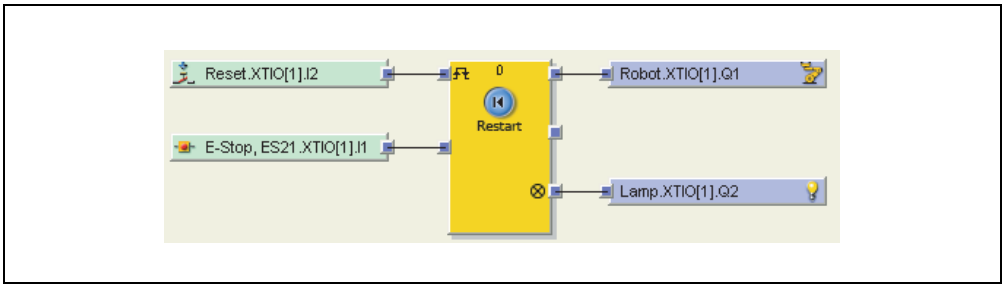

Figure 56:
Logic configuration example (Station A)

Configuring the Flexi Link routing for Station A

➢ In the Logic editor for Station A, add an additional Routing N:N function block, configure it for two inputs and outputs and connect its inputs to the WS0-XTIO inputs for the reset button and the emergency stop button.

➢ Drag two outputs of the Station A CPU module on the logic editor worksheet. You will find the outputs in the output selection window under **CPU1** or **CPU3**.

Figure 57:
CPU outputs in the output selection window

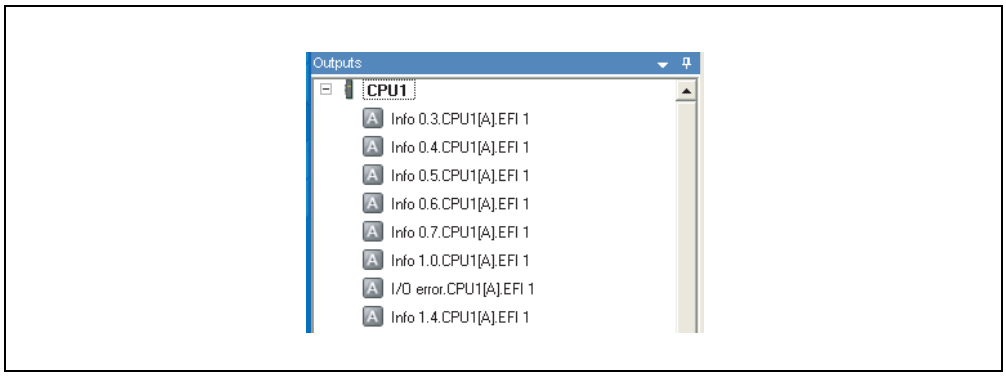

Note

- A square with the letter A-D within it denotes a bit within the Flexi Link process image.
- Each output can be used only once. Used outputs are displayed green.
- Connect the outputs of the Routing N:N function block to the two CPU1[A] outputs (e.g. **Info 0.3.CPU1[A].EFI1** and **Info 0.4.CPU1[A].EFI1**) as shown in Figure 58.

Figure 58:
Flexi Link routing logic example

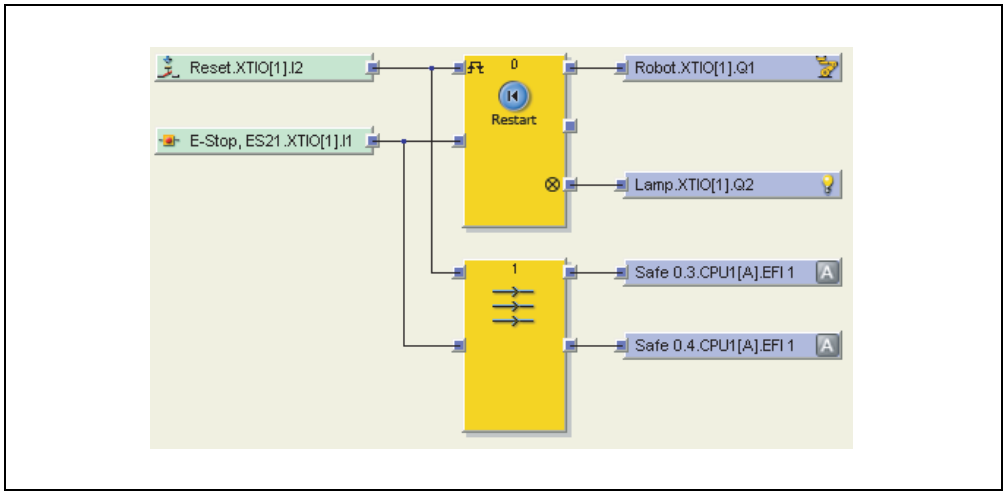

➢ Note which input is being routed to which output.

Recommendation In more complex projects, configure the routing connections on a separate page in the logic editor. Otherwise the logic design could get confusing.

Assigning tag names for the Flexi Link routing

- Still in the Station A view, switch to the Flexi Link routing table using the **Flexi Link station A** button in the toolbar (if your project contains also one or two network modules, you will find this entry in the submenu under **Network modules**).
- Click on **Byte 0** in the **EFI1** area to display the tag names for Byte 0 and its bits in the lower half of the window.

Figure 59:
Flexi Link routing table and tag names

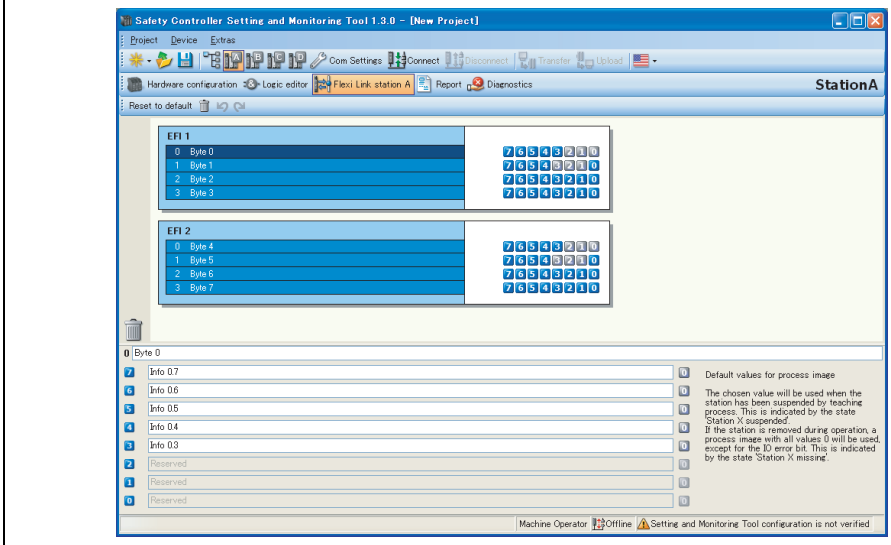

- Now replace the default tag names (e.g. **Safe 0.3** and **Safe 0.4**) with more expressive tag names (e.g. **Global Reset** and **Global E-stop**). The assigned tag names will be displayed in the logic editor from now on.

Figure 60:
Assigned Flexi Link tag names in the routing configuration and in the logic editor



Note It does not make a difference for the routing whether you use the default tag names or change them, but assigning clear tag names will help you to keep track of things in your projects.

Configuring the logic for Station B

- Click on the button for Station B in the toolbar. Then switch to the **Logic editor** view for Station B.
- In the inputs selection window, find the two inputs from the Station A CPU module that are routed via Flexi Link. You can recognize them by their tag names:

Figure 61:
Routed inputs from Station A in the Station B logic editor

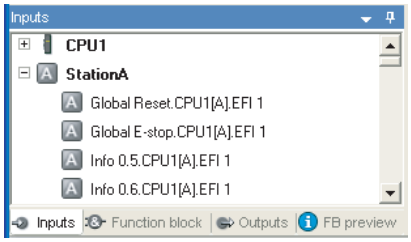

- Using these inputs, the output elements on the Station B WS0-XTIO module and a Restart function block, create the following logic configuration:

Figure 62:
Logic configuration example (Station B)

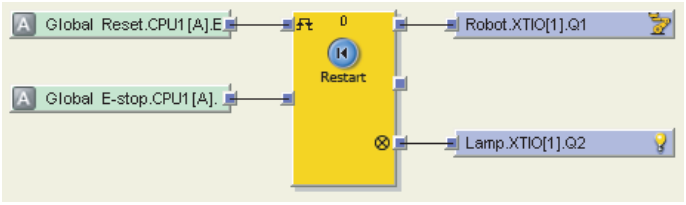

With this step the example project is finished. The input from the emergency stop button and from the reset button connected to Station A is routed to Station B via Flexi Link so that the robots connected to both stations can be controlled simultaneously.

7.3.4 Transferring and verifying the Flexi Link configuration

To start your Flexi Link system, connect the PC with the system, transfer and verify the configurations and switch the stations into the Run state. This requires that you have finished the configuration as described in the previous section and that you have set up and connected the required MELSEC-WS modules and other hardware.

Establish a connection to your Flexi Link system

- Connect a PC or notebook to the RS-232 interface of any CPU module in the system.
- Power on the Flexi Link system.
- Open the Setting and Monitoring Tool installed on the PC and load the project file with your configuration.
- If necessary, adjust the communication settings (see Section 6.2).
- Switch to the Flexi Link system overview. The configured stations in your project will be displayed with a light yellow background.

Figure 63:
Flexi Link system overview, system not connected

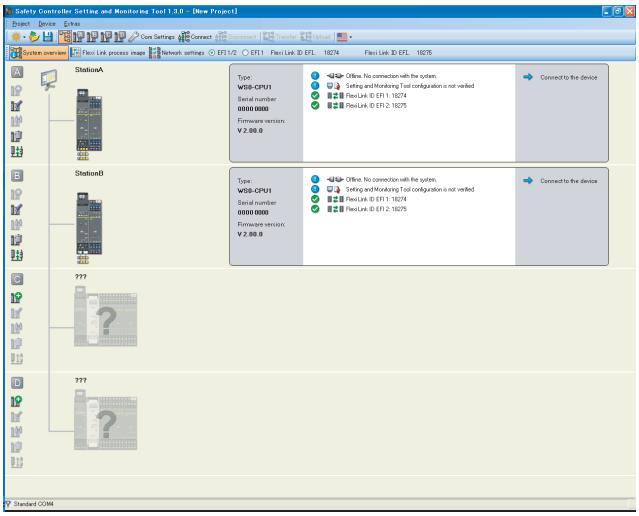

- Click on **Connect**. You will be prompted to select the stations you want to connect to. Activate all stations, then click **OK**.

Figure 64:
Connect dialog

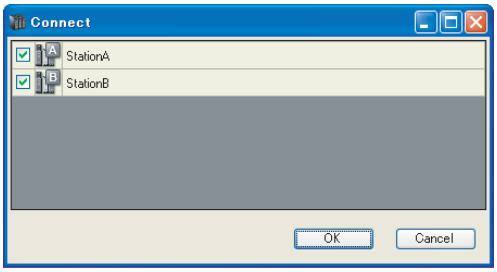

- If the CPU modules of the connected stations have not been configured for Flexi Link before, the Setting and Monitoring Tool will now open the Flexi Link **Network settings** view and list the found stations. In this case you will have to assign a unique Flexi Link address from A to D to the individual stations as described in Section 7.3.1.

The Setting and Monitoring Tool will connect to the Flexi Link system, compare the existing hardware and software configuration with the configuration in the Designer and display the results. If the configuration in the Setting and Monitoring Tool is not identical to the configuration in the connected stations, these will be displayed with a blue background.

Figure 65:
Flexi Link system overview, system connected, differing configurations

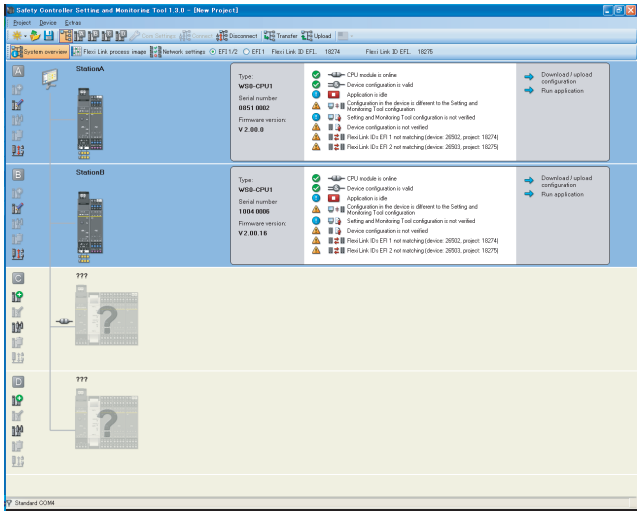

Transfer the configuration

- Now transfer the configuration to the stations by clicking on **Transfer**. Again you will be prompted to select which station(s) you want to transfer the configuration to.
- Select all stations and click on **OK**. The Setting and Monitoring Tool will now transfer the configuration to each station. You will need the password for Administrator; the default password is “MELSECWS”.
- Once a valid configuration has been transferred to a station successfully, the Setting and Monitoring Tool will ask you whether you want to set this station into the Run state. Click either **Yes** or **No**. The station will be displayed in the **Flexi Link system overview** with a grey background.

Figure 66:
Flexi Link system overview, system connected, configuration identical but not verified

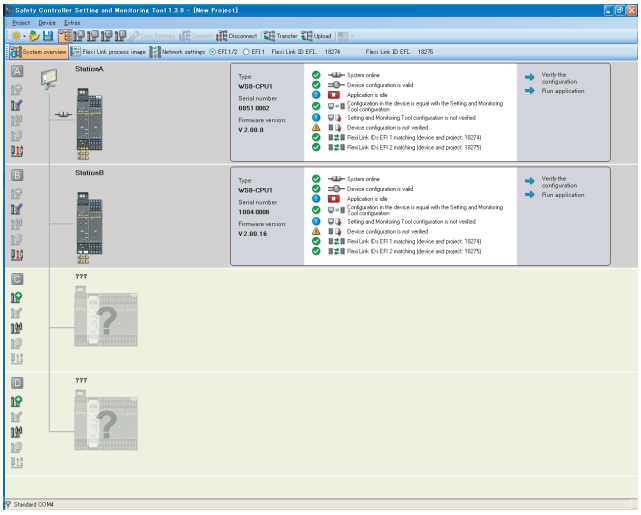

Note You can run or stop each station also in the **Hardware configuration** view for the respective station.

Verify the configuration

- Switch to the **Hardware configuration** view for any station in your project. If the device configuration is valid and equal with the configuration in the Setting and Monitoring Tool, but not yet verified, the CV LED on the CPU module will flash as well as the **Upload and verify configuration** button on the left side of the configuration area.
- Click the **Upload and verify configuration** button. The Setting and Monitoring Tool will upload the configuration from the module and compare it to the configuration in the Setting and Monitoring Tool. If both configurations match, the result will be displayed as a report and you will be asked whether you want to set the device to **Verified**. Read the report carefully.

Note You can print the report or save it in PDF format.

- If you have checked the report and want to set the device to **Verified**, click **Yes**. The device will be set to **Verified**. If it is currently not in the Run state you will now be asked whether you want to start it.
- Repeat this for all stations in your Flexi Link system.

For more detailed information on transferring and verifying a configuration please see Chapter 11.

7.4 Flexi Link functions

This section gives a comprehensive overview over the Flexi Link functions in the Setting and Monitoring Tool. These functions are divided into Flexi Link system functions and functions that are related to the single stations in a Flexi Link system. You can switch between the view for the Flexi Link system and the individual station views using the additional buttons that appear in the toolbar of the Setting and Monitoring Tool if a Flexi Link project is open.

Figure 67:
Flexi Link system and station buttons

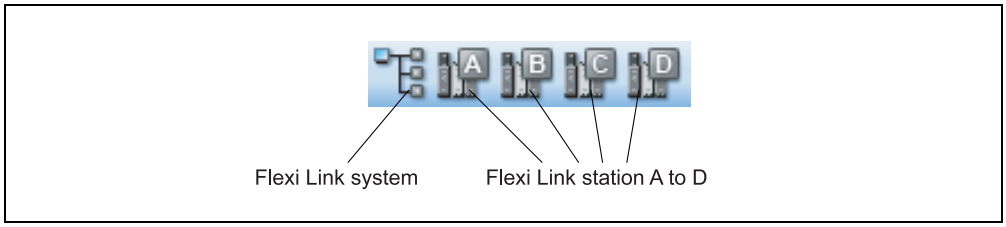

Flexi Link system functions

In the Flexi Link system view, you can switch between the different Flexi Link system functions using the buttons that are displayed under the menu bar:

Figure 68:
Flexi Link system menu bar

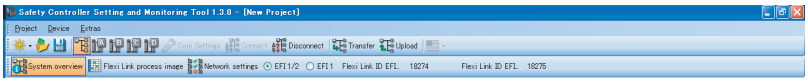

- The Flexi Link **System overview** provides information on the configured/connected stations and their status. See Section 7.4.1.
- The **Flexi Link process image** allows you to monitor the information that is exchanged between the connected Flexi Link stations. See Section 7.4.2.
- In the Flexi Link **Network settings** view you can scan the Flexi Link network for connected stations, view and assign the Flexi Link address to the connected stations and distribute the stations to their individual positions (A to D) in the Flexi Link network. See Section 7.4.3.
- The **EFI1/2** and **EFI1** radio buttons are used to choose the connection method, i.e. whether one or two EFI strings are used.
- On the right side the **Flexi Link IDs** for the current configuration in the Setting and Monitoring Tool are displayed.

Flexi Link station functions

The Flexi Link functions for an individual station can be reached if the view for this station is active:

Figure 69:
Flexi Link station menu bar

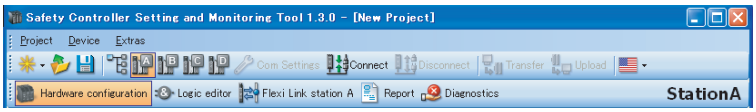

- Most of these functions as the **Hardware configuration**, **Report** or **Diagnostics** are working in the same way as in a standalone project. In this section only the additional functions that are relevant for Flexi Link will be described.

- The **Logic editor** is used to configure which information each station will send to the other stations via the Flexi Link network. This is also where the information provided by the other Flexi Link stations in the network is available and can be used as input for logic applications. See Section 7.4.4.
- The **Flexi Link station X** view is where you can assign tag names to the source information that the station sends to the Flexi Link network and change the process image default values (High or Low). These values will be used in case the **Teach function** is used to simulate the presence of this station. See Section 7.4.5 and Section 7.4.6.

  If a network module is connected to the station, the **Flexi Link Station X** button is integrated in the **Network modules** menu:

Figure 70:
Flexi Link station menu bar with network module

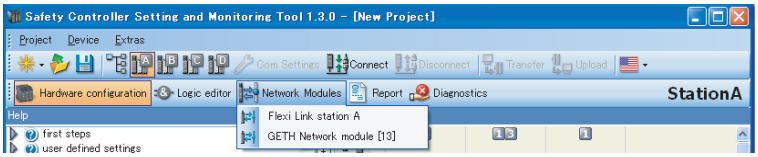

7.4.1 Flexi Link system: System overview

The Flexi Link **System overview** provides information on the configured/connected stations and their status. To open the system overview, first click on the **Flexi Link system** button in the toolbar and then on the **System overview** button.

Figure 71:
Flexi Link system overview

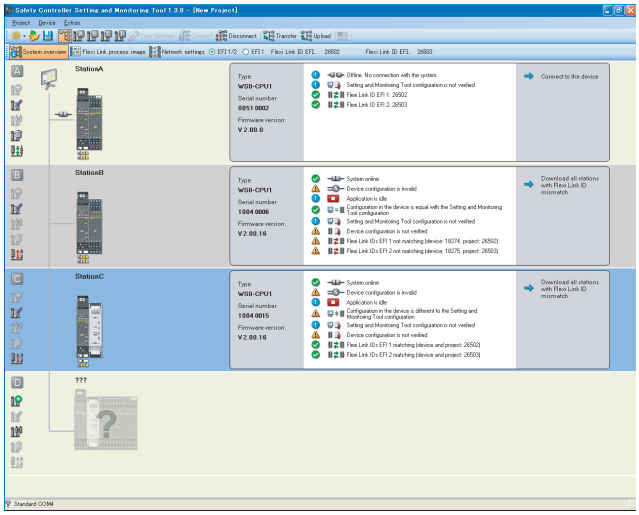

In this view each station is displayed with its current hardware configuration, information on the connected CPU, online status, configuration status and Flexi Link IDs. The background color of each station also indicates its online status and configuration status as shown in Figure 71.

In the example above, Station A is offline (light yellow background), while station B is online with a valid configuration (grey background), station C is online with an invalid configuration (blue background) and no station D has been configured (light yellow background).

To the left of each station you will find the following tool icons:

Table 15: Flexi Link system overview tools

Icon	Function	Description
	Add	Adds a new station in the current slot (A to D) and switches to the view for the new station. This function is only available if no station has been configured for this slot yet.
	Edit	Switches to the view for this station. There you can edit its properties including the station name, configure the connected hardware, program the logic, verify and lock the configuration etc.
	Recognize	Connects to this station, uploads its hardware configuration, then prompts you whether the software configuration shall be uploaded from this station.
	Delete	Deletes this station from the current configuration. Note: You will not be asked to confirm this command and there is no Undo function. Unsaved changes will be lost.
	Connect	Connects to this station so that you can upload, transfer or verify the configuration, run or stop the application etc.
	Disconnect	Disconnects from this station so that you can e.g. edit the configuration.

Note

- If a function is not available, the corresponding icon is displayed grey.
- Instead of clicking the **Add** or **Edit** button, you can also switch to the view for an individual station by clicking the corresponding button for **Station A to D** or by double clicking on that station's graphical representation.
- The **Connect** or **Disconnect** buttons next to each station perform their function only for this station while the **Connect** or **Disconnect** button in the menu bar for the Flexi Link system overview will connect to or disconnect from the entire Flexi Link system (when you click **Connect** there you will be asked which stations you want to connect to).
- It is not possible to set all stations into the Run state or to stop them all simultaneously in the Flexi Link system overview. You need to switch to the station view for each station and to log in individually to each station as Administrator with the password for this station in order to run it or to verify the configuration.

7.4.2 Flexi Link system: Process image

The **Flexi Link process image** allows you to monitor the information that is exchanged between the Flexi Link stations. In the left area of the screen the hardware configuration for each station is displayed, on the right side the bits for EFI1 and EFI2 (if used) are displayed with their tag names. Bits that are currently High in the process image are highlighted green.

Figure 72:
Flexi Link process image

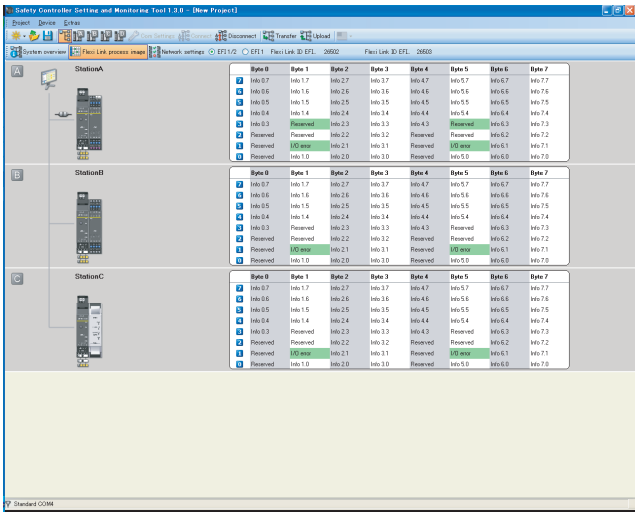

Note

- If a station is not in the Run state, its process image will be set to Low and its I/O error status bits will be set to High (see Section 5.6.5).
- Double clicking on the hardware symbol for a station will open the routing view for this station where you can edit the tag names for the bits and bytes sent from this station (see Section 7.4.4).

7.4.3 Flexi Link system: Network settings

The **Network settings** view is where you can assign the Flexi Link address (A, B, C or D) to the individual stations in the Flexi Link network. This is a prerequisite for the configuration because it enables the Flexi Link Designer to address each station and to identify the bits in the Flexi Link process image, e.g. Station A, EFI1, Byte 0, Bit 0.

The **Network settings** view is opened automatically if you connect to a Flexi Link system and the Setting and Monitoring Tool detects an erroneous address assignment, e.g. if two or more connected stations have the same Flexi Link address. This will be the case if you have created a Flexi Link system with new CPU modules or if you have replaced one or more CPU modules in an existing system.

Figure 73:
Flexi Link Network settings view

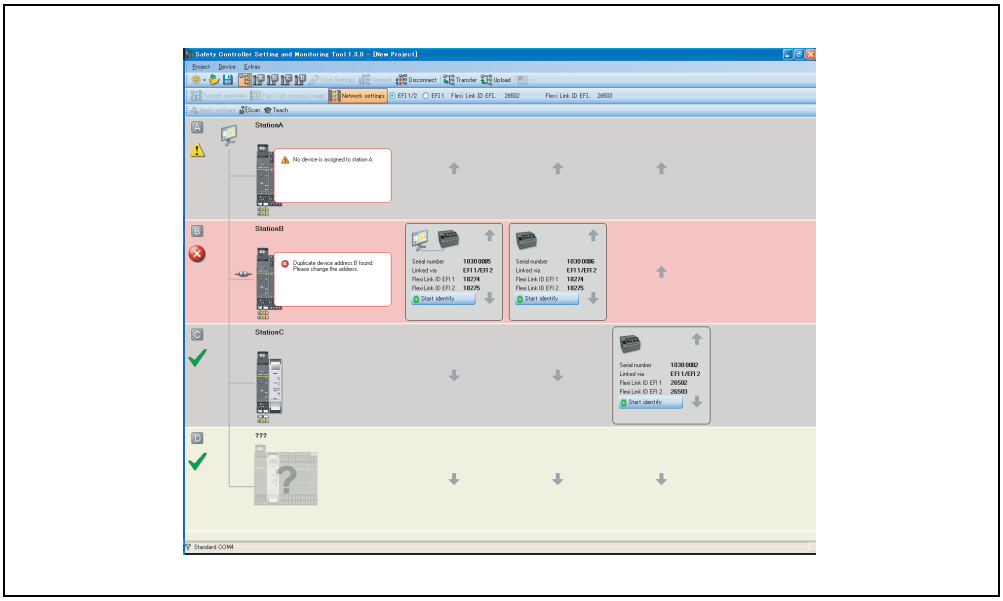

If at least one station of a Flexi Link system is online, all connected stations are shown with their current address assignment (address A to D). Additionally the memory plug serial number and the current Flexi Link IDs for EFI1 and EFI2 of each station are displayed here. You can update this information using the **Scan** button at the top left of the window. Error messages and warnings regarding the current system status are displayed as a pop-up message for each station.

Note

- You have two possibilities to identify a station:
  - Click on the **Start identify** button of one of the displayed stations. The corresponding station's MS and EFI1 LEDs will start flashing alternating with the EFI2 LED (2 Hz). You will need the password for Administrator. The default password is "MELSECWS". To stop the LED blinking, click the button again (it is now labeled **Stop identify**).
  - Check the serial number on the memory plug and compare it with the serial number shown in the Setting and Monitoring Tool. The serial number displayed in the **Network settings** view is the serial number of the memory plug, not the serial number of the CPU module.

How to change the assigned Flexi Link address (A to D):

➢ To change the address of a station, click on the up and down arrow buttons to move it up or down to the desired position in the window. Alternatively, you can drag and drop the station to the desired position.

Figure 74:
Apply settings button



➢ Click on the **Apply settings** button in the upper left hand corner of the screen. The Flexi Link addresses of the stations will be changed.

Note

- The **Apply settings** button has no effect on the Flexi Link IDs in the stations. The Flexi Link IDs are transferred to the stations as a part of the configuration. That means that if you have made changes to the configuration of any station that have resulted in a change of the Flexi Link IDs, then you have to transfer the configuration again to all stations in order to apply the new Flexi Link IDs.
- It does not matter which Flexi Link address is assigned to which station. One recommended possibility is to follow the mounting order in the switching cabinet from left to right for better orientation.
- If you change the address assignment of a Flexi Link system, you may have to reconfigure the process image and the parts of the logic programming that use input bits from the Flexi Link process image because the Flexi Link address is part of the bit assignment in the process image.

7.4.4 Flexi Link stations: Flexi Link data in the logic editor

The logic editor is the central place where the available information in the Flexi Link network is processed. Flexi Link stations are handled like EFI sensors:

- Each station can use the information of the other stations as input data
- Each station can provide its own data as outputs

ATTENTION

Ensure that all signals are present long enough!

Very short signals may not be recognized and transferred to other Flexi Link stations, especially if the logic cycle time of the source is much shorter than the Flexi Link system's logic execution time. Take appropriate measures to ensure that all signals are present long enough to be recognized in the Flexi Link system (e.g. by using a delay function block in the logic).

Routing of data into the Flexi Link network

In order to write data into the Flexi Link network so that it can be used by other stations you need to define which bit in the Flexi Link process image shall be set. You will find the bits that can be defined for each station in the **Outputs** panel in the logic editor under the symbol for the used CPU:

Figure 75:
Flexi Link output bits for Station A in the logic editor

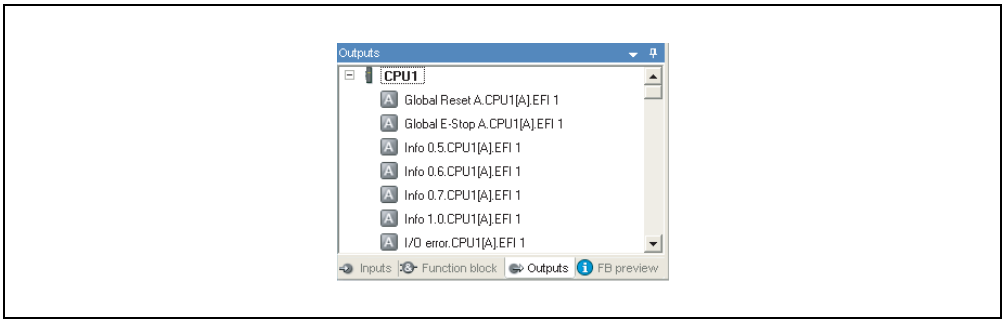

Note

- A square with the letter A-D within it denotes a bit within the Flexi Link process image.
- Each output bit can be used once. Outputs that are already in use are displayed green.
- You can edit the tag names of the output bits in the **Flexi Link station X** view (see Section 7.4.5).

How to send information into the Flexi Link network:

➢ Drag the bit you want to define on the worksheet and connect it to the output of a function block.

➢ To have the value of an input available directly for all stations in the Flexi Link network, use a **Routing 1:N** or a **Routing N:N** function block as shown in Figure 76:

Figure 76:
Routing an input into the Flexi Link network

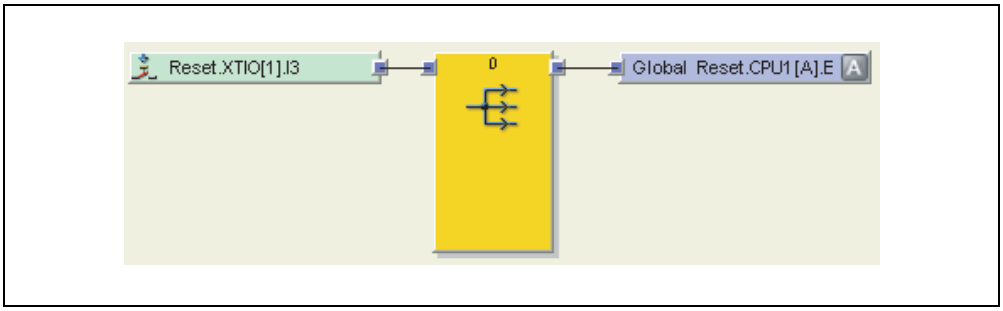

Using data from the Flexi Link network

You will find all available information from the other stations in the Flexi Link network in the **Inputs** tab of the logic editor under the symbol of the respective station's CPU module:

Figure 77:
Flexi Link input bits from Station A in the logic editor of another station

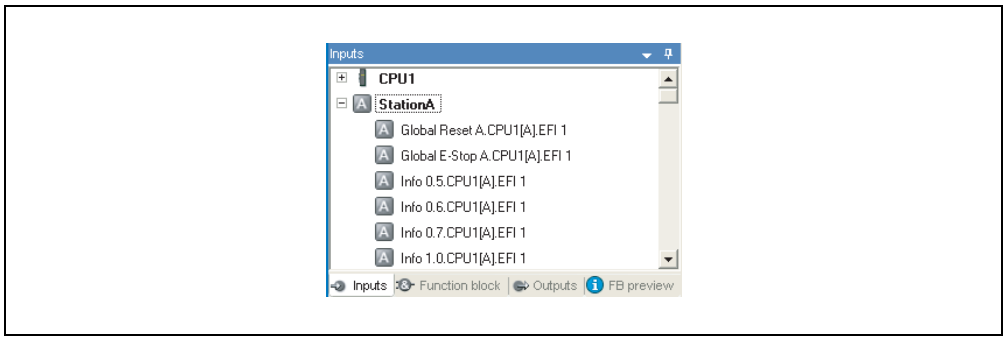

You can use these inputs just as any other input.

Note

- Inputs can be used several times.
- Inputs that are already used at least once in this station's logic are displayed green.
- The Flexi Link inputs are displayed with their respective tag names. You can edit the tag names in the **Flexi Link station X** view of the originating station (see Section 7.4.5).

7.4.5 Flexi Link stations: Station X view and process image

In the **Flexi Link station X** view you can do the following:

- Edit the tag names for the bits and bytes that this station sends to the Flexi Link network.
- Set the default values for this station's process image bits to Low or High (see also Section 7.4.6).

➢ To open the **Flexi Link station X** view press the corresponding button in the toolbar. If the station contains also a network module, this button can be found in the **Network module** menu.

Figure 78:
Flexi Link station A view

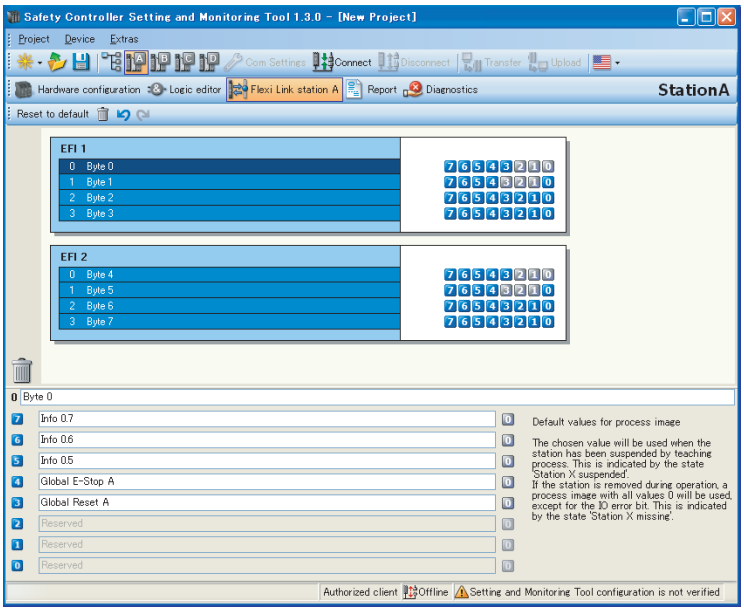

The toolbar

The toolbar contains icons for the following actions (from left to right):

- Reset to default: Sets the tag names and configured default settings for all bits and bytes to the default values.
- Clear selected byte: Deletes all tag names for the selected byte and its bits and sets the default value for all bits of this byte to Low.
- Undo the last action
- Redo the last action

How to edit the tag names:

➢ Click on a byte in the EFI1 or EFI2 area to display its bits in the lower half of the window.

➢ Change the displayed tag names as desired. The bits will appear in the logic editor in the **Outputs** tab with their new tag names.

Note

- Some bits are reserved and can not be used or edited. These bits are displayed grey in the upper half of the window.
- You can also delete tag names. Bits that have no tag name can not be used. They will be displayed grey in the upper half of the window and they are not displayed in the Flexi Link process image (see also Section 7.4.2).

How to set the default values:

➢ Click on a byte in the EFI1 or EFI2 area to display its content in the lower half of the window.

➢ Now click once on the icon to the right of the tag name field of any bit to toggle this bit's default value between 0 (Low) and 1 (High).

The set default value will be used in the Flexi Link system's process image if the corresponding station has been suspended (see Section 7.4.6).

Figure 79:
Default values for Flexi Link input bits



Note Changing the default value of any bit changes the process image of the configuration and in consequence the Flexi Link ID for the EFI string the changed bit belongs to. You will be warned that you have to transfer the changed configuration to all stations in order to apply the new Flexi Link ID. Otherwise the communication in the Flexi Link network will be disrupted due to a Flexi Link ID mismatch (see also Section 7.2.2 and Section 7.5).

7.4.6 Flexi Link stations: Teach function

The Teach function allows you to keep a Flexi Link system operable and running even if one or more stations in the system are missing (i.e. switched off). “Teaching” the missing station or stations will suspend them such that the other stations will simulate their existence. Each suspended station will be treated as if it were online and running. The Flexi Link process image will contain the values that have been configured as default values for this station (see Section 7.4.5). This can be useful e.g. while setting up a system or for maintenance purposes.

If the Teach function is active on any station and this station is connected to the system and in the Run state, it will trigger the complete system to perform a network scan and to treat all missing stations as suspended. I.e. the system will function as if these stations were still online and use their default process images.

ATTENTION

Before you use the Teach function, check whether a dangerous state can occur!

If the Teach function is used, the safety outputs on any of the still active stations may be High.

- Analyze your application and check whether additional safety measures have to be implemented if the Teach function is enabled.
- Consider how to handle the disconnected machine modules. Point out that the control parts and sensors have no effect to the previously connected machine modules (e.g. install “out of order” signs at E-stops).
- The teach function must be considered as a configuration process. Therefore the teach function needs to be secured according to the respective safety requirements, e.g. by using a key operated switch that is wired to the logic teach input and a restart function block in the logic to check the timing condition.
- Only authorized and especially trained personnel are allowed to activate the Teach function.
- Before using the Teach function, make sure that nobody is in the hazardous area or has access to the hazardous area while the Teach function is active.

Note

- A station is considered as “missing” and can be suspended if its power supply is switched off or if its EFI connection to the Flexi Link system has been interrupted completely. It is not possible to suspend a station if it is still connected and e.g. one of the following conditions applies:
  - The station is not in the Run state.
  - The station has generated an EFI error, e.g. due to a Flexi Link ID mismatch.
- Teaching always affects all powered stations in the Flexi Link system, not a single station. Therefore it may be sufficient to activate the Teach function just on one of the connected stations. However, if only one station in the system is equipped with a teach button and configured for teaching, then only the other stations in the system can be suspended since this particular station is needed for activating the Teach function.
- Each CPU in a Flexi Link system signals the current system status via status bits that can be used as inputs in the logic editor (see Section 7.4.7).

How to configure the Teach function:

➢ Connect a Teach button to the inputs of each station in the Flexi Link system that shall be able to activate the Teach function. The Teach button can be e.g. a dual channel key operated switch.

➢ In the logic editor for these stations, use a Restart function block to connect the Teach button input to this station’s Teaching output as shown in Figure 80.

Figure 80: Configuration of the Teach function in the logic editor

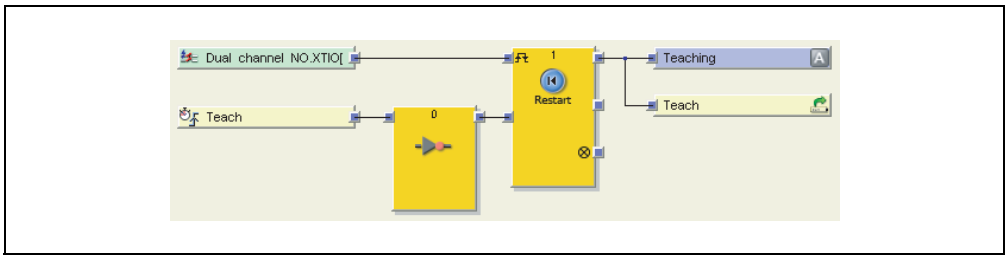

If the Teach button is pressed, the Teaching output will become High for one logic cycle. The rising edge (Low to High) on the Teaching output triggers the Teach function.

ATTENTION

Ensure that the transitions of the signals for Teaching fulfill the requirements!

In case of a short-circuit to High (to 24 V DC) at a physical input, the evaluated signal can have a pulse when the signal is reset due to the short-circuit detection. If such a pulse can result in a dangerous state in the machine, the following points have to be observed:

- Ensure protected cable laying for the signal line (due to cross-circuiting to other signal lines).
- No short-circuit detection, i.e. do not reference to test outputs.

How to use the Teach function:

➢ In a running Flexi Link system, switch off the power supply of one or more stations (e.g. Station C). The system will detect that these stations are missing and set their process image to failsafe values (zeros). The remaining stations will show an EFI error (EFI LEDs flashing ☀ red) and their EFI status bits for the switched off station(s) (e.g. **Station C missing**) will become High and **Station missing** will become High as well.

- Now press the Teach button on any of the remaining stations. The system will now continue to operate as if the missing stations were still present. Their “real” process image will however be replaced with the static default values that you have configured before (see Section 7.4.5). The EFI status bits of the remaining stations will now show which stations have been suspended (e.g. **Station C missing** and **Station missing** will become Low again and **Station C taught** becomes High).
- To bring a missing and consequently suspended station back into operation, reconnect its power supply. As soon as the station has finished powering up, the other stations will detect its presence and show an EFI error. The EFI status bit **Station C taught** remains High while the system status bit **Teach required** becomes High.
- Now press the Teach button again. The system will reintegrate the suspended station and continue operation. The **Teach required** system status bit will become Low as well as the respective EFI status bits (e.g. **Station C missing** remains Low and **Station C taught** also becomes Low).

Note If a station is missing not because its power supply has been switched off but due to an interruption of its EFI connection, it will most likely have gone into an error state. In this case you will have to reset this station by interrupting its power supply for at least 3 s before it can be reintegrated into the system.

7.4.7 Flexi Link teaching status and diagnostics

Each CPU in a Flexi Link system signals via status bits whether Teaching is required and which station is missing or is suspended (= has been taught). These status bits are available as inputs of the respective CPU in the logic editor.

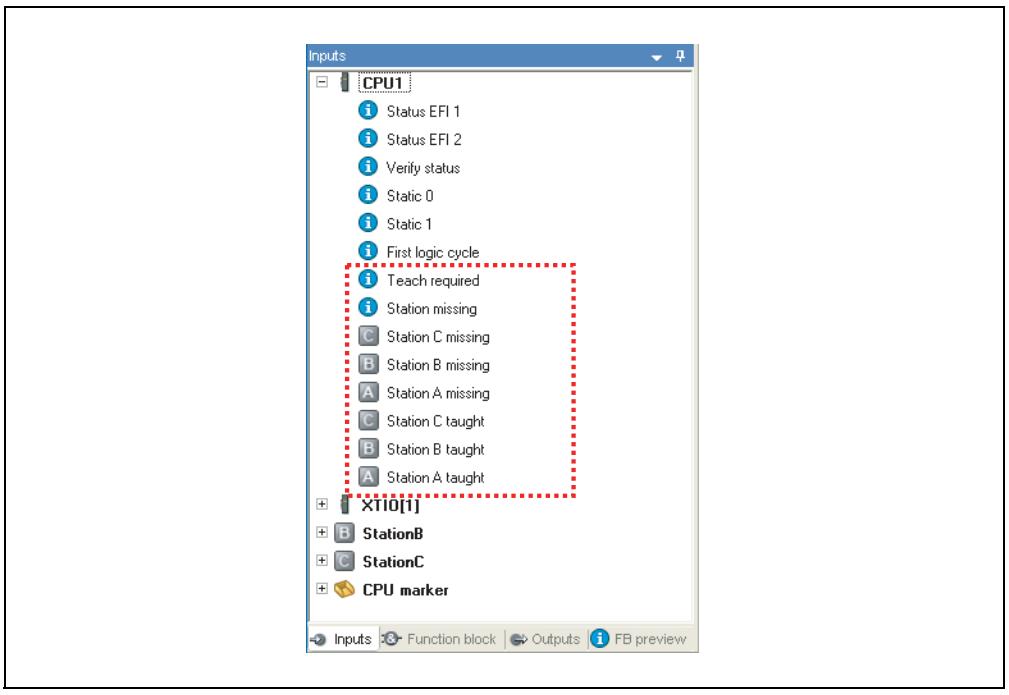

Figure 81:
Flexi Link system status information in the logic editor

Table 16: Meaning of the Teaching status bits

CPU status bit	Meaning
Teach required	A station that has been suspended before, has reappeared in the system. In this case the process image of the all Flexi Link station is set to Low and the EFI I/O error bit is set to High. To continue operation, Teaching is required. Teaching will reset the error bit, even if the found station has been already suspended again.
Station missing	At least one station in the system is missing. To continue operation, Teaching is required. This means that at least one of the **Station X missing** status bits (see below) is High as well.
Station X missing	The station with the Flexi Link address X (= A, B, C or D) is missing. In this case the process image of the corresponding Flexi Link station is set to Low and the EFI I/O error bit is set to High. This means that the **Station missing** status bit (see above) is High as well.
Station X taught	The station with the Flexi Link address X (= A, B, C or D) is suspended. In this case the default process image of the corresponding Flexi Link station is used.

Using these status bits you can set up your own diagnostic system, e.g. by connecting these status bits to a Log generator function block or by switching on a warning lamp if Teaching is required or active.

Note After the transition from the Stop state to the Run state, a station is considered as missing it it has not been found within 3 minutes.

For a description of the other CPU status bits see Section 5.6.4.

7.5 Flexi Link troubleshooting

This section deals with some common causes for malfunctions of the Flexi Link network and how to diagnose and correct them.

For an overview of the LED error displays please refer to the Safety Controller User's Manual.

7.5.1 Flexi Link ID mismatch

Error description

If no process image transfer is possible between the stations in your system and all CPU modules show a recoverable error (MS LED flashing ☀ Red at 1 Hz and EFI1 and EFI2 LEDs light up Red), this could be due to a Flexi Link ID mismatch. This means that at least one of the stations in the system has one or two Flexi Link IDs that differ from the other stations' Flexi Link IDs.

Diagnostics

- Switch to the Flexi Link **System overview**.
- If the Setting and Monitoring Tool is not connected to the system, connect to all stations.
- Check the status messages of the stations for indication of a Flexi Link ID mismatch.

Correction of the error

If different Flexi Link IDs exist in the system, the current configuration must be transferred to all stations again.

- Check whether the configuration in the Setting and Monitoring Tool is correct.
- Connect to all stations.
- Transfer the configuration to all stations.
- Switch to the view for each station and verify the configuration if necessary.

8 Flexi Line

8.1 Flexi Line overview

Flexi Line enables you to reliably network up to 32 MELSEC-WS safety controller. Only WS0-CPU3 modules can be used in a Flexi Line system. It is not possible to connect any other CPU modules (WS0-CPU0, WS0-CPU1).

A uniform process image is defined for the entire Flexi Line system. Each byte of this process image is either global, i.e. in the entire system, or local, i.e. only for the related station and its neighboring stations. Each Flexi Line station communicates with its neighboring stations via this process image. The topology permits communication without addressing.

Features

- Reliable connection of up to 32 MELSEC-WS stations via the Flexi Line interface.
- Topology without addressing: In case of a change in the order of the stations, it is sufficient to confirm the new arrangement using a Teach pushbutton.
- The EFI interface remains available without limitation:
  - It is possible to connect EFI-compatible sensors.
  - It is possible to connect a Flexi Link system.
- A global process image is defined for all stations.
- Within the process image, global or local bytes can be defined.
- The process image can contain up to 12 bytes or 96 bits.

The maximum cable length between 2 stations is 1000 meters. The possible total length of a system with 32 stations is therefore 31 kilometers.

8.1.1 System requirements and restrictions for Flexi Line

For Flexi Line the following system requirements must be met as a minimum:

Table 17: System requirements for Flexi Line

System component	Version
Hardware	WS0-CPU3
Software	Setting and Monitoring Tool version V1.7.0 or higher

Notes

- You can also use Flexi Link or EFI communication at the same time as Flexi Line, i.e. it is possible to connect either EFI-compatible devices or Flexi Link stations.
- The process image is transferred from station to station with a fixed update rate. The processing (logic) on the individual stations is, however, not necessarily simultaneous, as the stations are not synchronized with each other.
- The update rate of the Flexi Line system is dependent on the maximum length of cable between two stations and the size of the process image.

Table 18: Update rate for a Flexi Line system as a function of the maximum length of cable and the size of the process image

Max. cable length	32 bits	64 bits	96 bits
125 m	2 ms	2 ms	4 ms
250 m	2 ms	4 ms	8 ms
500 m	4 ms	8 ms	12 ms
1000 m	8 ms	12 ms	20 ms

8.2 Principle of operation Flexi Line

8.2.1 Topology

The individual stations within a Flexi Line system are not identified using addresses. Instead, each station is connected to its immediate neighbors. Communication is with the previous station and the next station.

The arrangement of the stations in the Flexi Line system must be confirmed during commissioning by means of a teach process and subsequently monitored. If a station is disconnected from the system, replaced or added, then the arrangement of the stations must be confirmed again (see section 8.2.5).

8.2.2 Flexi Line configuration

The heart of the Flexi Line system is the process image. This process image defines how many and which items of data are communicated from station to station, at which update rate, with which range (routing) and with which default value (high or low). The routing and the default value can be defined separately for each byte.

The process image is normally defined during the configuration of the first station in the Flexi Line system and then transferred to the rest of the stations.

You can open the Flexi Line view at any time using the Network modules button on the menu bar. The view is also opened automatically if you add a Flexi Line element to an WS0-CPU3.

The **Flexi Line** view comprises the following elements:

- menu bar with the **Project, Device, Extras** menus
- toolbar with icons for quick access to frequently used menus
- tabs for changing to the **Hardware configuration**, **Logic editor**, **Network modules**, **Report**, **Diagnostics** and **Data recorder** views
- toolbar for Flexi Line configuration with the Import Flexi Line definition, Export **Flexi Line definition**, Teach, Reset and Configuration lock functions
- navigation bar for changing the view between General settings and **Byte configuration**
- configuration areas for the two views mentioned above: **General Flexi Line information** and Specification for the view General settings, Byte configuration and Details and bit configuration for the view **Byte configuration**
- drop-down information area

The configuration view for Flexi Line is split into two.

- You can set the defaults in General settings. These settings are primarily the required combination of the size of the process image, segment length and update rate as well as the name of the process image and its revision number.
- You can define the data for the process image in Byte configuration. Each byte is given a range, a default value and a name. All bits used can also be given a tag name. By deactivating unused bits these bits can be hidden in the logic and the diagnostics.

Flexi Line toolbar

The Flexi Line toolbar contains buttons for the following functions:

- importing a Flexi Line definition saved previously
- exporting a Flexi Line definition
- Teach function: confirmation of the topology of the Flexi Line system during commissioning as well as on changes to the topology
- Reset: restarts the entire Flexi Line system
- Configuration lock: Using the slider you can lock the Flexi Line configuration to prevent unintentional changes.

General settings

Figure 82:
Flexi Line, General settings view

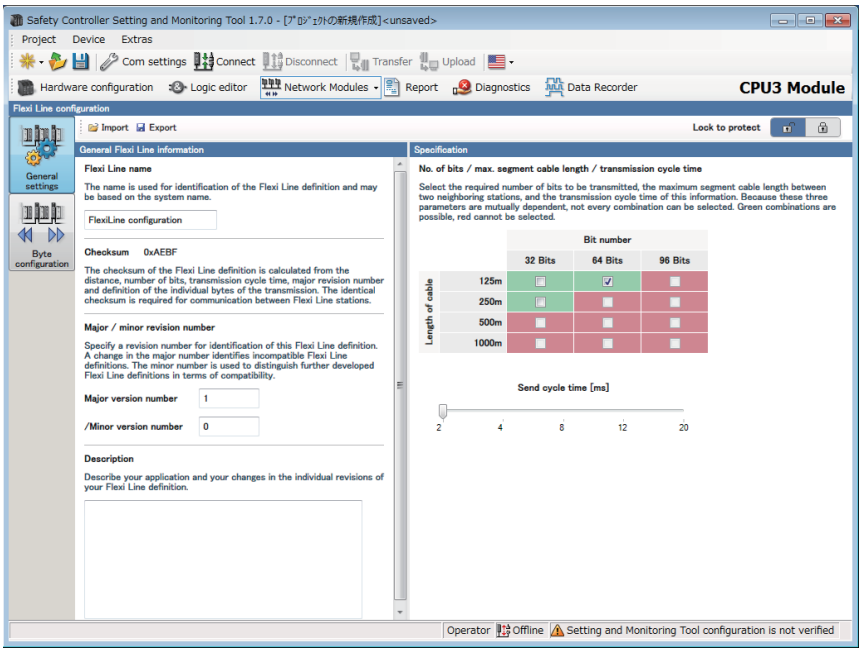

In the left of this view you can enter for your process image a name, a comment as well as a revision number, consisting of a major revision number and a minor revision number. The checksum for the process image (CRC) is also displayed here (see section 8.2.3).

On the right you can define the size of the process image and the update rate. The possible values are dependent on the maximum segment length in the complete Flexi Line system (see Table 18).

If a cell in the table is displayed in red, the related combination of segment length and data size is not possible with the update rate set. To be able to select this combination, you must first set a higher value for the update rate.

Note The update rate is identical for all stations and therefore not synchronous with the logic cycle, which can vary from station to station.

Byte configuration

Figure 83:
Flexi Line, Byte configuration view

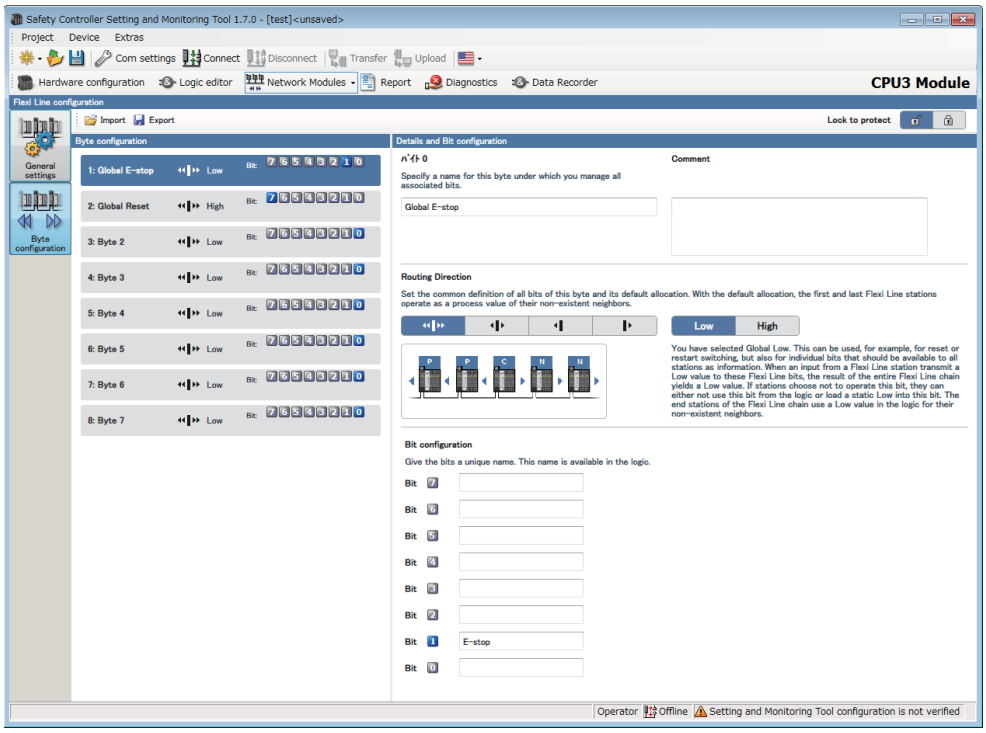

On the left of the view you will find an overview of the bytes in the Flexi Line process image. If you select a byte, you can edit the following settings for this byte on the right:

- name of the byte
- routing: The data for a byte can be either shared globally in the entire system or only locally with one or two neighboring stations.
- default value High or Low
- tag names of the individual bits
- activation or deactivation of the individual bits

Routing

A byte can be either local, i.e. only valid for one or both immediately neighboring stations, or global in the entire Flexi Line system.

A byte that is valid globally is communicated to the entire Flexi Line system. All stations can read and change each bit of this byte. If a station changes a bit, this change will be effective on all other stations.

A byte that is valid locally is shared with either one or both immediately neighboring stations. A station that receives a local byte from a neighboring station evaluates the information from this byte and in turn prepares its own local byte that it sends to one or both its neighboring stations. The data received and the data sent are independent of each other during this process.

Default value

The default value defines how a bit is affected by a station:

- A bit with the default value High is set to 1 (logic status high) if all stations signal a 1 for this bit (logical AND). As soon as only one station sets the bit to the logic status low, the bit is set to 0.
- A bit with the default value Low is set to 0 (logic status low) if all stations signal a 0 for this bit (logical OR). As soon as only one station sets the bit to the logic status high, the bit is set to 1.

Activation and deactivation of individual bits

You can deactivate bits that are not required by not assigning a name to these bits. Deactivated bits are no longer available or shown in the logic editor or in the diagnostics. However, the size of the process image is not affected by this change.

8.2.3 Flexi Line checksum (CRC)

The checksum is required so that the stations in a Flexi Line system can communicate with each other. All stations in a Flexi Line system must have an identical checksum. This ensures that only stations that belong to the same Flexi Line system can communicate with each other. If a different checksum is detected in a Flexi Line system, then all connected stations will change to the “Error on the Flexi Line bus” mode (Line LED flashes ☀ Red/green at 2 Hz).

The checksum is calculated from the following settings:

- size of the process image and maximum cable length
- update rate
- range of each byte
- default value of each byte
- first part of the revision number

The minor revision number as well as the names you have assigned to bits, bytes and the process image itself do not affect the checksum.

Note If the process image is changed on any station such that the checksum changes, then you must transfer this new image to all other stations. In this way you will set the checksum in all stations to the same value.

Otherwise there will be different checksums in the Flexi Line system such that the safety communication between the stations cannot be established.

The checksum is part of the configuration that is saved in the memory plug for each CPU3 module connected.

8.2.4 Flexi Line data in the logic editor

Each Flexi Line station automatically prepares a local instance of the process image from the data received from its neighboring stations. If local information on the related station affects global bits, these values are also immediately taken into account in the local instance of the process image.

The output process image is prepared with the aid of **Routing** function blocks. Here the signals on the local inputs must each be routed to a Flexi Line output.

Figure 84:
Routing of local signals to the Flexi Line process image

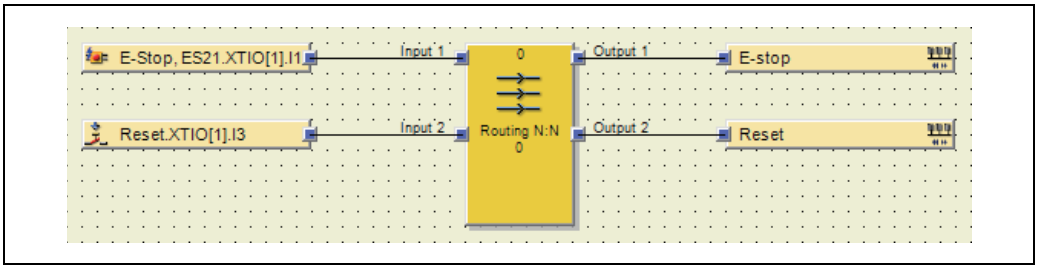

Then the values on these local inputs are available in the entire Flexi Line system as Flexi Line inputs via the Flexi Line process image.

In the context of the logic programming, the Flexi Line inputs do not differ from other types of safety inputs.

Figure 85:
Usage of signals from the Flexi Line process image in the logic

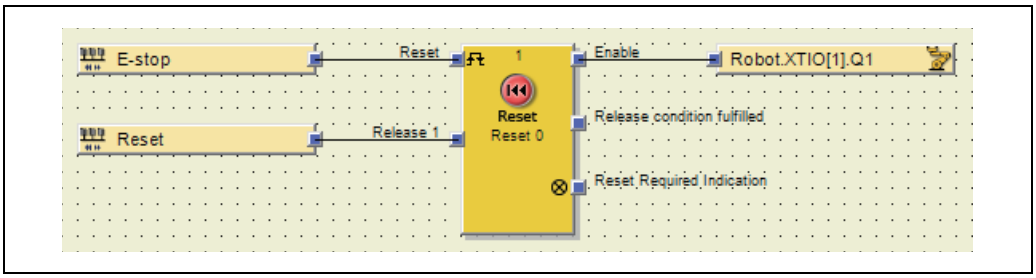

8.2.5 Teach function

The topology of the Flexi Line system must be confirmed to activate the function. It can be executed using the Setting and Monitoring Tool. If it is to be possible to change the topology of the system later, an integrated Teach function is also available in the logic.

Note Any change in the topology of a Flexi Line system immediately stops the Flexi Line communication. Communication is only re-initialized and restarted after the Teach function is run.



ATTENTION

Before you use the Teach function, check whether a dangerous state can occur!

If the Teach function is used, the safety outputs on any of the still active stations may be High.

- Analyze your application and check whether additional safety measures have to be implemented if the Teach function is enabled.
- Consider how to handle the disconnected machine modules. Point out that the control parts and sensors have no effect to the previously connected machine modules (e.g. install “out of order” signs at E-stops).
- The teach function must be considered as a configuration process. Therefore the Teach function needs to be secured according to the respective safety requirements, e.g. by using a key operated switch that is wired to the logic teach input and a restart function block in the logic to check the timing condition.
- Only authorized and especially trained personnel are allowed to activate the Teach function.
- Before using the Teach function, make sure that nobody is in the hazardous area or has access to the hazardous area while the Teach function is active.
- After using the Teach function, check the safety function of the entire Flexi Line system.

Teaching using Setting and Monitoring Tool

In the **Flexi Line** view in Setting and Monitoring Tool there is a **Teach** button on the toolbar.

- Click the **Teach** button during commissioning when all stations are switched on and in the **Teach required** state. The topology of the system is then checked and confirmed and the Flexi Line system is started.

Teaching using a pushbutton

If it is necessary to be able to remove, add or replace individual stations during operation, then you can also run the Teach function using a pushbutton.

How to configure the Teach function using a pushbutton:

- Connect a Teach button to the inputs of the station in the Flexi Line system that shall be able to activate the Teach function. The Teach button can be e.g. a dual channel key operated switch.
- In the logic editor for this station, use a **Restart** function block to connect the Teach button input to this station's Teaching output as shown in Figure 86.

Figure 86:
Configuration of the Teach function in the logic editor

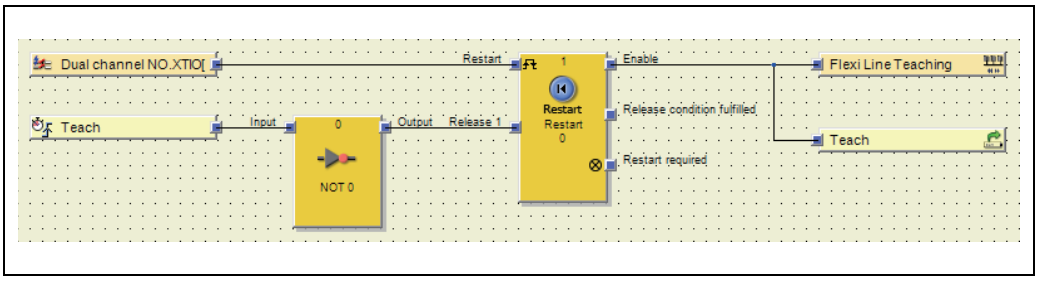

If the Teach button is pressed, the Teaching output will become High for one logic cycle. The rising edge (Low to High) on the Teaching output triggers the Teach function.

8.2.6 Status and diagnostics

The **Diagnostics** view shows which data have been received, used and forwarded.

Figure 87:
Flexi Line diagnostics

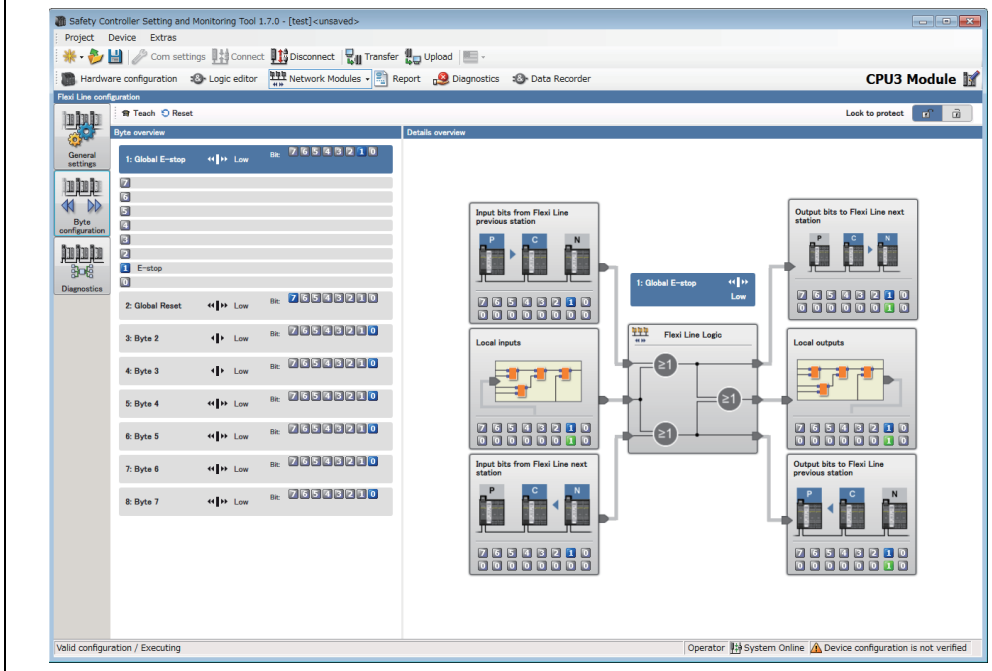

The bytes in the process image for the actual station are shown in the Byte overview area on the left. If you select one of the bytes, the related bits are shown underneath together with their tag names.

The processing of the selected bits is shown in the Detail overview area on the right:

- On the left you can see the input bits that are received from the two neighboring stations as well as the status of the local inputs.
- On the right you can see the output bits that are sent to the two neighboring stations, as well as the status of the local outputs.

If the Flexi Line system is online, active bits are shown in color and inactive bits in gray.

In the area on the left you can select the individual bits in the byte currently shown. The processing of these bits is shown in detail on the right:

Figure 88:
Flexi Line diagnostics

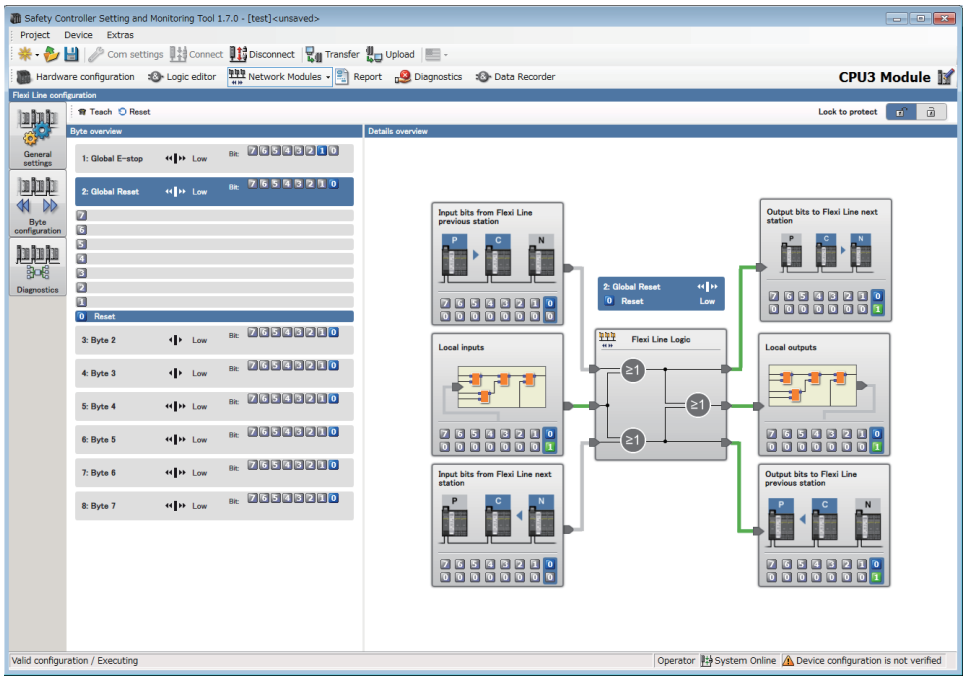

In the example in Figure 88 bit 0 from byte 2 with the tag name Reset has been selected. This bit is low in the process images that are received from the neighboring stations, but high at the local input (marked in green). For this reason this bit is also high in all process images sent by this station.

8.3 Getting started

8.3.1 Configuration and commissioning of a Flexi Line system

This section describes how you can setup a new Flexi Line system and place it in operation.

A Flexi Line system is configured in 2 steps:

- In the first step the first station is configured and the process image defined.
- The second step comprises the configuration of the other stations. During this step the process image must be transferred to these stations.

Note Each station in a Flexi Line system must be configured in Setting and Monitoring Tool as an individual station and placed in operation.

Configuration of the first station in the Setting and Monitoring Tool

➢ Open the Setting and Monitoring Tool software on your personal computer.

➢ In the startup dialog, click on **Create new Flexi Link project** or choose from the **Project** menu the command **New**, **Standalone station project**. The **Hardware configuration** window is opened.

➢ First add a new WS0-CPU3.

➢ Then add the required hardware, as described in section 5.5.1 and in section 5.5.3.

➢ Once the hardware configuration for the selected station is complete, drag the **Flexi Line** element from the list box for the elements to the CPU module. A pop-up window opens.

➢ In the pop-up window click **New Flexi Line definition**. The **Flexi Line** view opens.

➢ Configure the Flexi Line process image as described in section 8.2.2.

Recommendation Plan the Flexi Line process image carefully. If you change the process image subsequently, then you must transfer it again to each of the individual stations in the Flexi Line system.

➢ On the Flexi Line toolbar click the **Export Flexi Line definition** button and export the Flexi Line definition.

➢ Configure the logic for the station as described in section 5.6 and in section 8.3.2.

Setting-up the other stations in Setting and Monitoring Tool

➢ Configure the hardware for the remaining Flexi Line stations in the same way as for the first station.

➢ Once the hardware configuration for a station is complete, drag the **Flexi Line** element from the list box for the elements to the CPU module. A pop-up window opens.

➢ In this window click the name of the file with the Flexi Line definition saved previously to import it.

Or:

➢ Click on **Use existing Flexi Line definition**. A file selection dialog opens. Select the desired file and click on **Open**.

➢ Then configure the logic for the station.

Commissioning of the Flexi Line system

➢ Connect the individual Flexi Line stations as described in the user's manuals (hardware).

➢ Place in operation each individual station as a standalone system. The stations change to the **Teach required** status and the LINE LED flashes ☀ **Green** at 2 Hz.

➢ Once all stations are in the **Teach required** status, change to the **Flexi Line** view while Setting and Monitoring Tool is connected to any station.

➢ Click the **Teach** button on the toolbar to place Flexi Line in operation. The topology of the system is then checked and confirmed and the Flexi Line system is started.

8.3.2 Conversion of a Flexi Line system

New stations can be added to an existing Flexi Line system if these systems have a Flexi Line definition that matches the existing system. This action is also possible while the existing system is in operation. As soon as the stations in the system detect the addition, they change to the Teaching required status and the LINE LED flashes ☀ **Green** at 2 Hz.

If one or more stations are removed from a correctly configure Flexi Line system while it is switched off, after it is switched on again this system changes to the Teaching required status and the LINE LED flashes ☀ **Green** at 2 Hz.

If one or more stations are removed from a Flexi Line system while it is in operation, then the neighboring stations signal a Flexi Line error state, i.e. the LINE LED flashes ☀ **Red** at 1 Hz. The error state can be reset in this case with a teaching process.

If a station that is no longer required is bypassed while the system is in operation, this action will result in a Flexi Line error. In this case the system cannot be reset by teaching, instead it must be switched off and on again. After switching on the system changes to the Teaching required status and the LINE LED flashes ☀ **Green** at 2 Hz.

8.3.3 Configuration of the Flexi Line logic

The logic for a Flexi Line station is programmed in 2 steps:

- Integration of the local data for the station into the Flexi Line process image: All local information of relevance for the Flexi Line process image must be integrated into the process image with the aid of a Routing function block.
- Creation of the local logic with the aid of the process image data.

Example of simple Flexi Line logic

The following example shows a station with an emergency stop pushbutton and a reset pushbutton. This station switches a machine via a single-channel safety output. The following figure shows the hardware configuration:

Figure 89:
Example hardware configuration for a Flexi Line system

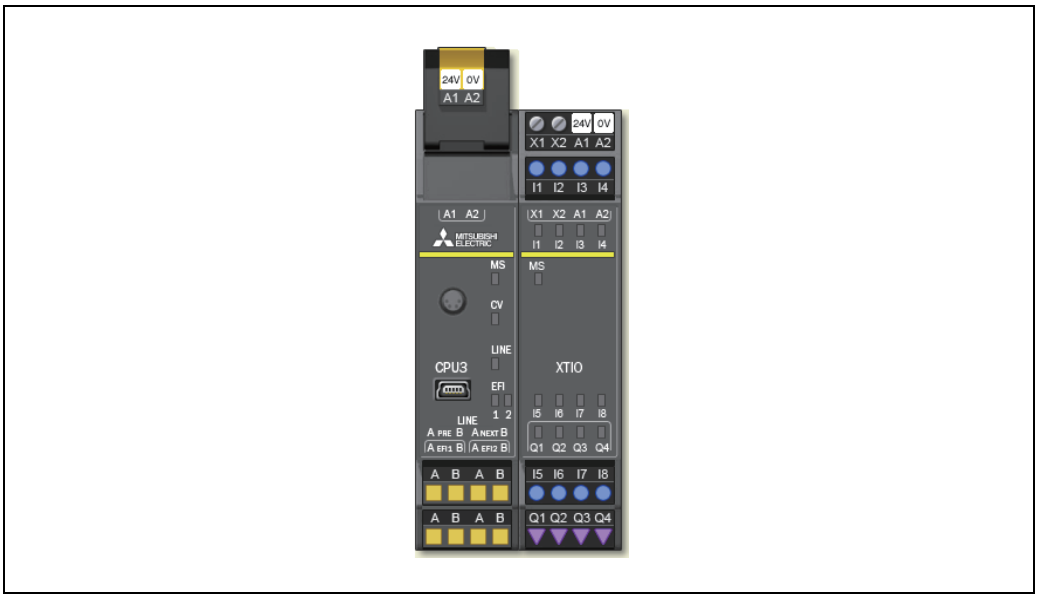

The station is connected via Flexi Line to identical or similarly configured stations on which the states of the two buttons should also be available. For this purpose two bits are used in the process image:

- Bit 1: global byte, default value: high, name: E-stop
  This bit collects all emergency stop commands from all stations: If an emergency stop pushbutton is actuated on any station, this bit is set to low (logical AND).
- Bit 9: global bit, default value: low, name: Reset
  This bit collects all the reset commands from all stations: If a reset pushbutton is actuated on any station, this bit is set to high (logical OR).

The signals from the two pushbuttons connected are now routed to the Flexi Line process image:

Figure 90:
Routing of local signals to the Flexi Line process image

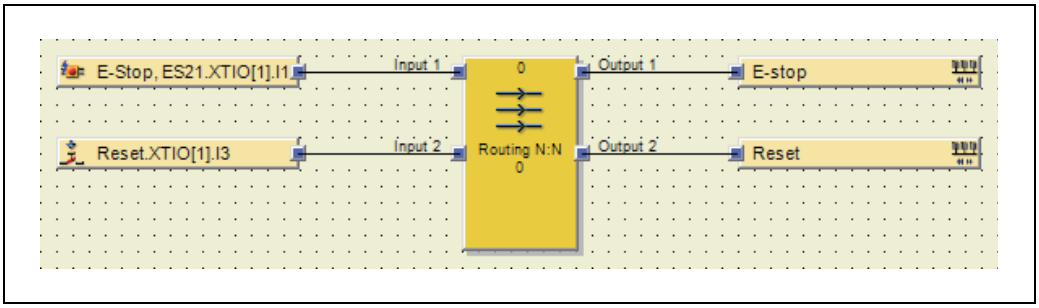

Then these signals can be evaluated in the logic on any station in this Flexi Line system in the following manner:

Figure 91:
Usage of signals from the Flexi Line process image in the logic

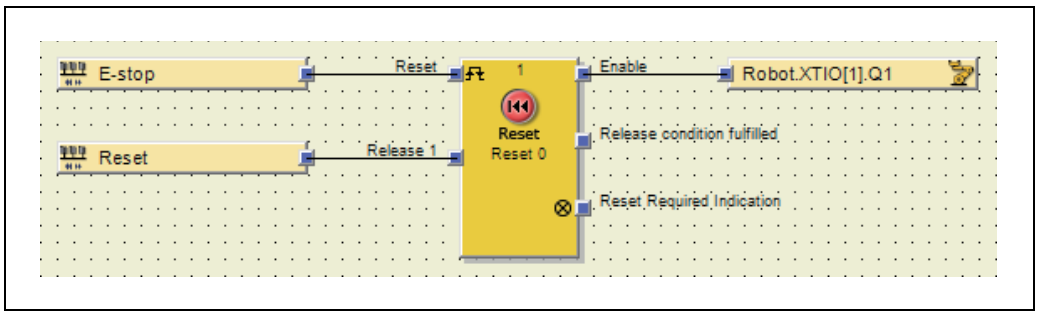

9 Logic programming – Function blocks

9.1 General description

The function logic of the MELSEC-WS safety controller is programmed by using function blocks. These function blocks are certified for use in safety-relevant functions if all safety standards are observed during implementation. The following sections provide information on important aspects of using function blocks in the MELSEC-WS safety controller.

9.2 Safety notes for the logic programming



ATTENTION

Observe the relevant safety standards and regulations!

All safety related parts of the installation (cabling, connected sensors and actuators, configuration settings) must be according to the relevant safety standards (e.g. IEC 62061 or EN/ISO 13849-1) and regulations. Only safety-relevant signals may be used in safety-relevant logic. Ensure that the application fulfills all applicable standards and regulations!

You are responsible for checking that the right signal sources are used for these function blocks and that the entire implementation of the safety logic fulfills the applicable standards and regulations. Always check the mode of operation of the MELSEC-WS module and of the logic program in order to ensure that these behave in accordance with your risk avoidance strategy.

Take additional safety measures if the safe value may lead to a dangerous condition!

The safe value of process data and outputs is Low, which is applied if an error is detected. If the safe value (signal = Low) may lead to a dangerous condition in the application, additional measures must be taken, e.g. evaluation of the status of the process data and switching off the related output signals if the status evaluation detects an error. This needs especially to be considered for inputs with edge detections.

Take unexpected rising or falling edges into account!

Special attention is required for applications where an unexpected rising or falling edge at an input with edge detection may lead to a dangerous situation. An error on an input can generate such edges (e.g. network or EFI communication interruption, cable interruption at digital input, short circuit at digital input connected to test output). The safe value is applied until the error reset condition is fulfilled. Due to this the related signal can behave as follows:

- It changes temporarily to High, instead of remaining Low (rising edge and falling edge, i.e. transition from Low to High to Low),
  or
- it changes temporarily to Low, instead of remaining High as under faultless condition (falling edge and rising edge, i.e. transition from High to Low to High),
  or
- it remains Low, instead of changing to High as under faultless condition.

Take delays into account that are caused by CPU markers and jump addresses with logic loop backs!

A loop back signal is an input signal that is connected to an output of a function block with the same or higher function block index (the function block index is displayed at the top of each function block). Therefore the input uses the output value of the previous logic cycle. This must be considered for the functionality and especially for the response time calculation.

To connect a loop back signal a jump address or a CPU marker must be used. A CPU marker generally causes a delay of one logic cycle.

Figure 92:
CPU marker

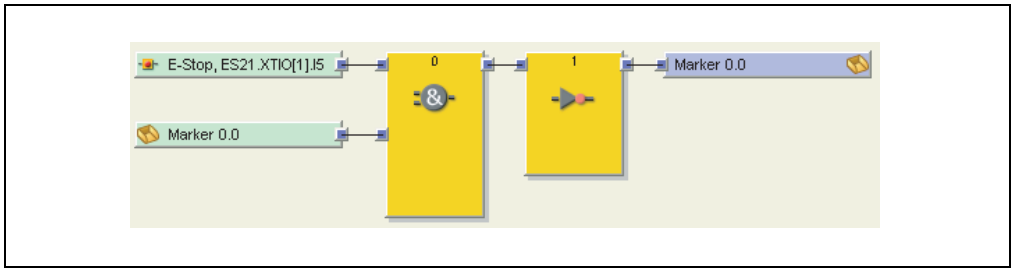

A jump address causes a delay of one logic cycle if it constitutes a loop back. If this is the case, the input of the jump address is displayed with a clock symbol (with Setting and Monitoring Tool V1.3.0 or higher).

Figure 93:
Jump address with loop back

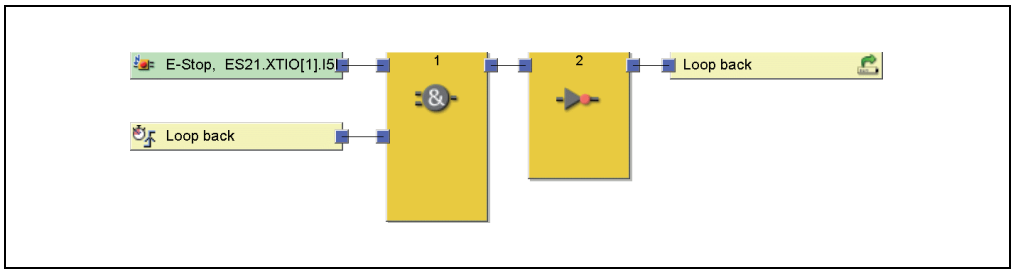

9.3 Function block overview

The MELSEC-WS safety controller uses function blocks to define the safety-oriented logic. There are logic function blocks and application-specific function blocks. The following table lists all function blocks available in the CPU modules:

Table 19: Overview of the CPU module function blocks

Logic	
• NOT • AND • OR • XOR (exclusive OR) • XNOR (exclusive NOR) • Multiple release • RS Flip-Flop	• JK Flip-Flop • Multiple memory • Binary decoder • Binary encoder • Routing 1:N (signal duplication) • Routing N:N (N inputs to N outputs parallel)
Start/Edge	
• Reset • Restart	• Start warning • Edge detection
Delays	
• On-delay timer • Off-delay timer	• Adjustable on-delay timer • Adjustable off-delay timer
Counter and cycle	
• Event counter (up, down, up and down) • Clock generator	• Ramp down detection • Frequency monitor • Log generator
EDM/Output blocks	
• EDM • Valve monitoring	• Fast shut off with bypass • Fast shut off
Muting/Press	
• Sequential muting • Parallel muting • Cross muting • Universal press contact • Press single stroke	• Press setup • Press automatic • N-break (PSDI - Press with N-PSDI mode) • Eccentric press contact
Other	
• User mode switch • Emergency stop • Safety gate monitoring • Magnetic switch • Light curtain monitoring • Tolerant dual channel monitor	• Two hand control type IIIA • Two hand control type IIIC • Multi operator • Switch synchronization • Error output combination
User defined function blocks	
• Grouped function block	• Customized function block

A configuration can encompass a maximum of 255 function blocks. The logic execution time is a multiple of 4 ms and depends on the number and type of function blocks used. Therefore, the number and type of function blocks in your application should be kept as low as possible.

9.4 Function block properties

Function blocks offer a number of different properties that you can use. The configurable parameters differ depending on the function block. You can double-click the function block to access the configurable parameters and select the tab with the desired properties. The following example shows the Safety gate monitoring function block:

Figure 94:
Configurable parameters of function blocks

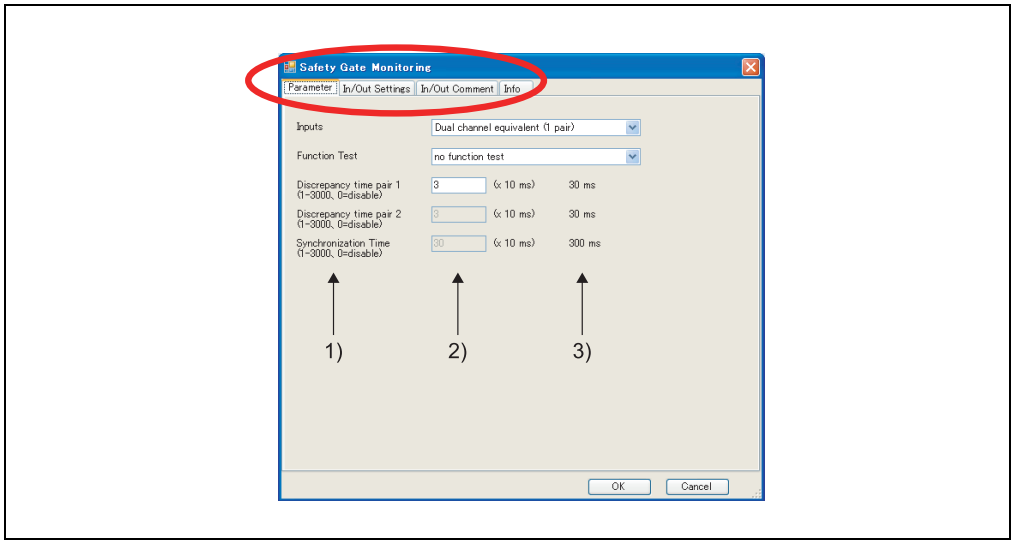

In addition to the type of input (e.g. single-channel, dual-channel equivalent, etc.), function blocks can have further parameters that are defined on the properties page of the function block shown above.

On the **Parameter** tab and on the **I/O settings** tab you will find the configurable parameters depending on the function block. The **I/O comment** tab allows you to replace the standard I/O descriptions of the function block with your own names and to add a name or a descriptive text to the function block that will be displayed under the function block in the logic editor. Under **Info** you will find a description of the function block and its parameters.

The number 1) to 3) for the time configuration parameters (of function block such as Safety Gate Monitoring and Valve Monitoring) indicate:

1) input range: an allowable range of an input value

2) input field: a field where a value is input within the input range

3) set parameter: a configured value. The value calculated as follows is displayed:
(Configured value) = (Value input to the input field) × (10 ms)

9.5 Input and output signal connections of function blocks

9.5.1 Function block input connections

Possible sources for function block inputs are all input elements listed in the input selection tree of the logic editor as well as the outputs of function blocks.

9.5.2 Inversion of input connections

The input connections of some function blocks can be configured as inverted. This means that the function block evaluates a High signal at an inverted input as Low and vice versa.

In order to invert an input, double click on the function block icon and check the desired input on the parameter page of the function block properties dialog:

Figure 95:
Inversion of function block input connections

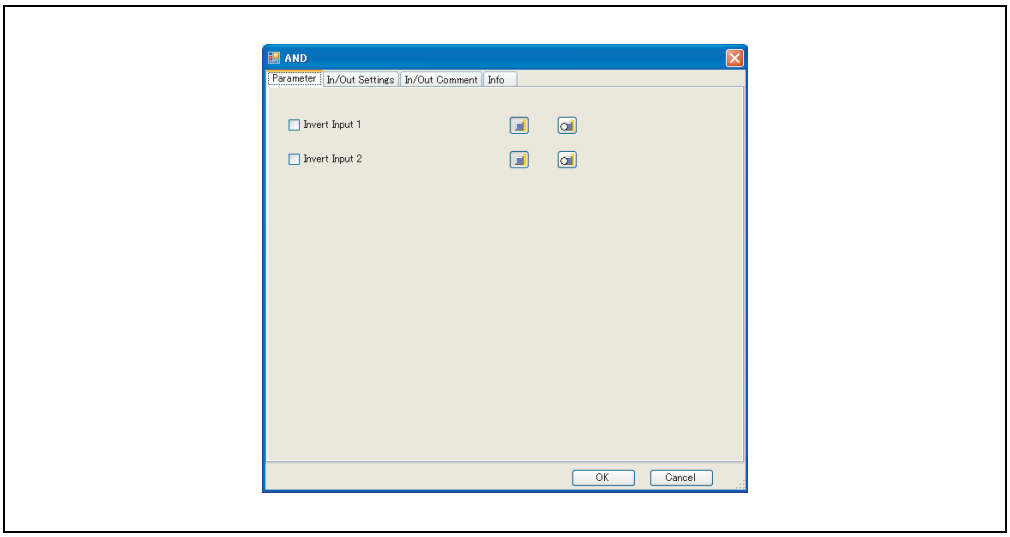

Inverted inputs are displayed with a small white circle:

Figure 96:
Example of an AND function block with one inverted input

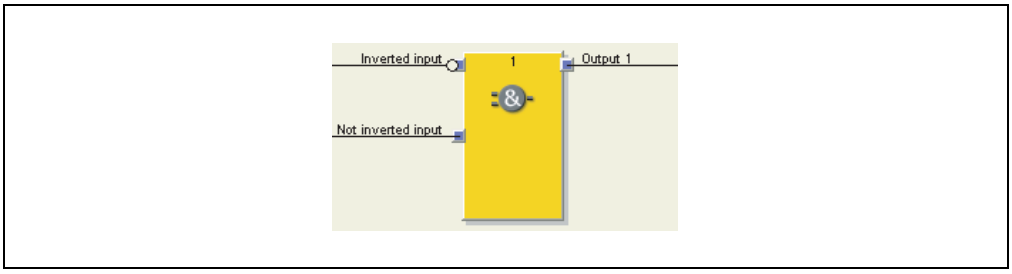

Examples of function blocks with invertable inputs include the following function blocks:

- AND
- OR
- Routing N:N
- RS Flip-Flop
- JK Flip-Flop
- Switch synchronization

9.5.3 Function block output connections

Function blocks provide various output signal connections for connecting to physical outputs or to other function blocks.

The output of a function block can be connected to several subordinate function blocks, but not to several output elements (physical outputs or EFI outputs). If you want to control several physical outputs with a single function block, use the Routing 1:N function block. The behaviour of the outputs is explained at the description of the individual function blocks.

You can choose whether error and diagnostics outputs are displayed. In the configuration basic setting of the function blocks only the Enable output and some further outputs are selected (e.g. Reset required). In order to display error and diagnostics outputs increase the number of outputs on the I/O settings tab of the function block properties.

Figure 97:
In/Out configuration of the Safety gate monitoring function block

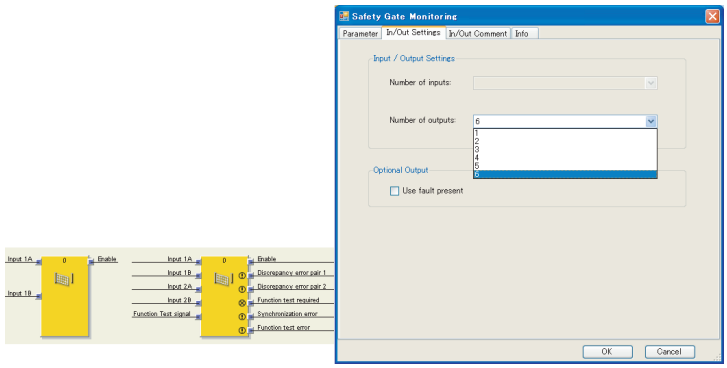

Safety gate monitoring function block with configuration basic setting

Safety gate monitoring function block with all available inputs and outputs

In/Out settings tab of the properties dialog for the Safety gate monitoring function block

9.5.4 Fault present output

Various function blocks dispose of the Fault present diagnostics output. In order to use it, activate the **Use fault present** checkbox on the I/O settings tab of the function block properties. The additional output “Fault present” is now displayed in the function block.

Figure 98:
Activating the Fault present output

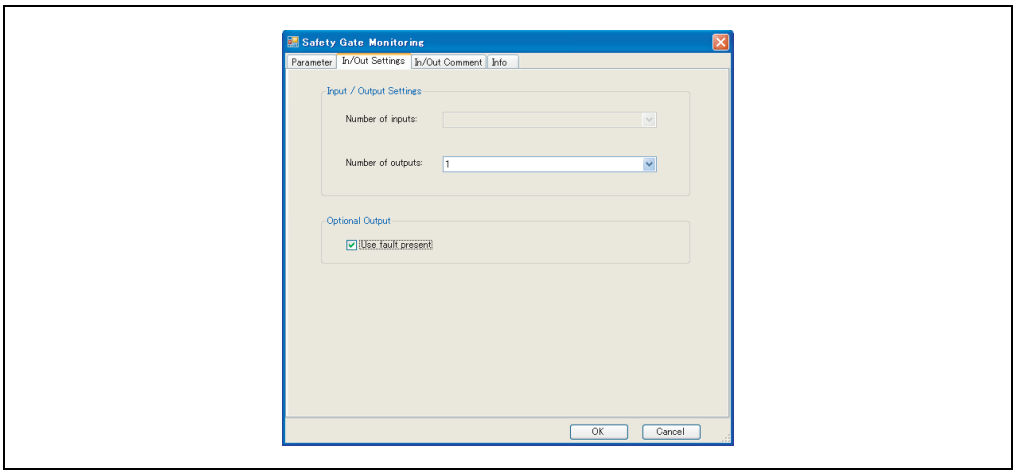

Figure 99:
Fault present output

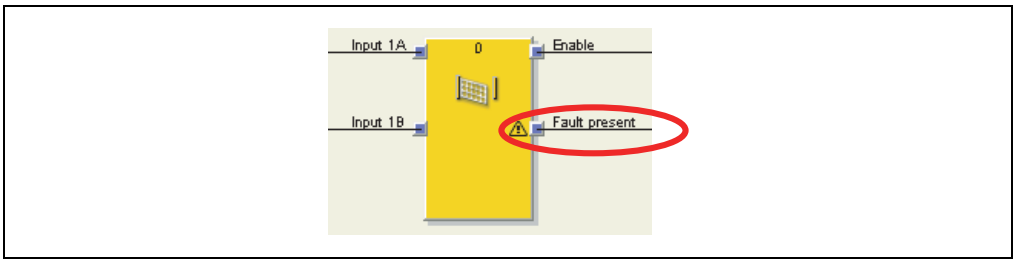

The Fault present output changes to High when an error has been detected on the basis of the configured function block parameters (e.g. discrepancy time error, function test error, synchronization error, etc.). When the Fault present output is High, the main output (e.g. the Enable output) changes to Low.

The Fault present output is set to Low if all errors are reset. The conditions to reset an error are described in the section of the respective function block.

9.5.5 Execution order specification

The execution order of the function blocks can be specified.

Right click on a function block and select **Change execution sequence**... from the context menu to open the **Change execution sequence** dialog. Enter numeric value into **New execution sequence** or use the **Backwards** or **Forwards** button to change the value.

Figure 100:
Change execution sequence

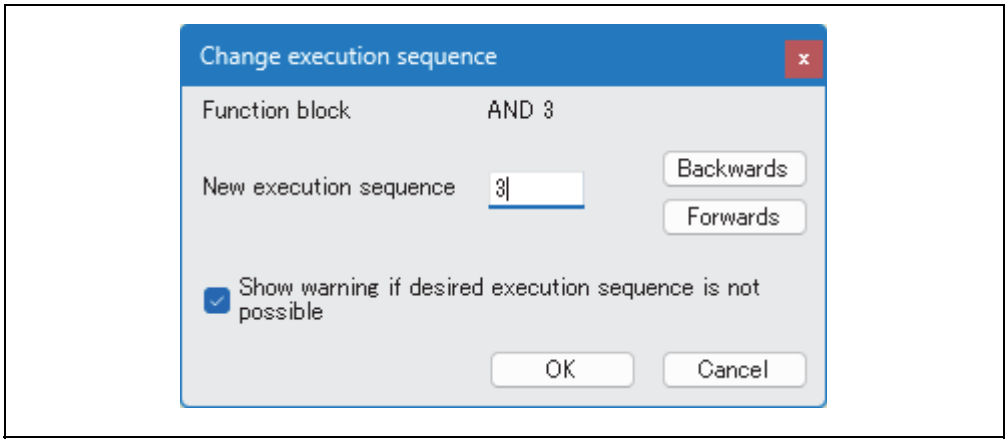

9.6 Timer values and logic execution time

Note The following has to be observed when selecting time monitoring functions for the discrepancy time, synchronization time, pulse duration, muting time, etc.: The times

- have to be greater than the logic execution time,
- have a precision of +/– 10 ms in the evaluation in addition to the logic execution time.

The logic execution time depends on the number and type of the function blocks used. It is a multiple of 4 ms. If the used logic execution time exceeds 100 %, then the logic execution time is increased by 4 ms. The logic execution time is displayed in the logic editor in the **FB preview** window. It has a precision of +/– 100 ppm (parts per million).

Effect of tested sensors

During a test signal the signal (bit) is “frozen”, i.e. the value that was present prior to the test gap is retained for the duration of the test signal (and possibly also the max. off-on delay). As a result a signal change can be delayed by this time, i.e. a pulse can be longer or shorter.

9.7 Logic function blocks

9.7.1 NOT

Function block diagram

Figure 101:
Function block diagram for the NOT function block

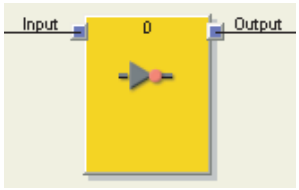

General description

The inverted input value applies at the output. If, for example, the input is High, the output is Low.

Truth table

The following applies for the truth table in this section:

“0” means logic Low.

“1” means logic High.

Truth table for NOT

Table 20:
Truth table for the NOT function block

Input	Output
0	1
1	0

9.7.2 AND

Function block diagram

Figure 102:
Function block diagram for the AND function block

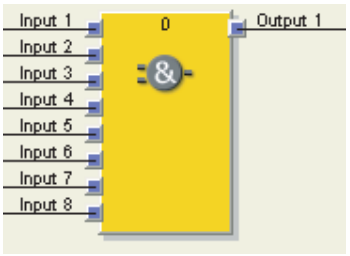

General description

The output is High if all evaluated inputs are High. Up to eight inputs are evaluated.

Example: If eight emergency stop buttons are attached to the inputs of the function block, the output would become Low as soon as one of the emergency stop buttons is pressed.

Parameters of the function block

Table 21:
Parameters of the AND function block

Parameter	Possible values
Number of inputs	2 to 8
Invert input x	Each input of this function block can be inverted (see Section 9.5.2).

Truth table

The following applies for the truth tables in this section:

“0” means logic Low.

“1” means logic High.

“x” means “any” = “0” or “1”.

Truth table for AND evaluation with one input

Table 22:
Truth table for AND evaluation with one input

Input 1	Output 1
0	0
1	1

Truth table for AND evaluation with two inputs

Table 23:
Truth table for AND evaluation with two inputs

Input 1	Input 2	Output 1
0	x	0
x	0	0
1	1	1

Truth table for AND evaluation with eight inputs

Table 24: Truth table for AND evaluation with eight inputs

Input 1	Input 2	Input 3	Input 4	Input 5	Input 6	Input 7	Input 8	Output 1
0	x	x	x	x	x	x	x	0
x	0	x	x	x	x	x	x	0
x	x	0	x	x	x	x	x	0
x	x	x	0	x	x	x	x	0
x	x	x	x	0	x	x	x	0
x	x	x	x	x	0	x	x	0
x	x	x	x	x	x	0	x	0
x	x	x	x	x	x	x	0	0
1	1	1	1	1	1	1	1	1

9.7.3 OR

Function block diagram

Figure 103: Function block diagram for the OR function block

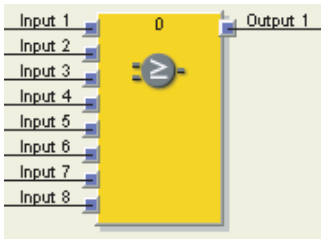

General description

The output is High if any one of the evaluated inputs is High. Up to eight inputs are evaluated.

Example: If eight light curtains are attached to the inputs of the function block, the output would become High as soon as at least one of the light curtains is free.

Parameters of the function block

Table 25: Parameters of the OR function block

Parameter	Possible values
Number of inputs	2 to 8
Invert input x	Each input of this function block can be inverted (see Section 9.5.2).

Truth table

The following applies for the truth tables in this section:

“0” means logic Low.

“1” means logic High.

“x” means “any” = “0” or “1”.

Truth table for OR evaluation with one input

Table 26: Truth table for OR evaluation with one input

Input 1	Output 1
0	0
1	1

Truth table for OR evaluation with two inputs

Table 27: Truth table for OR evaluation with two inputs

Input 1	Input 2	Output 1
0	0	0
1	x	1
x	1	1

Truth table for OR evaluation with eight inputs

Table 28: Truth table for OR evaluation with eight inputs

Input 1	Input 2	Input 3	Input 4	Input 5	Input 6	Input 7	Input 8	Output 1
0	0	0	0	0	0	0	0	0
1	x	x	x	x	x	x	x	1
x	1	x	x	x	x	x	x	1
x	x	1	x	x	x	x	x	1
x	x	x	1	x	x	x	x	1
x	x	x	x	1	x	x	x	1
x	x	x	x	x	1	x	x	1
x	x	x	x	x	x	1	x	1
x	x	x	x	x	x	x	1	1

9.7.4 XOR (exclusive OR)

Function block diagram

Figure 104: Function block diagram for the Exclusive OR (XOR) function block

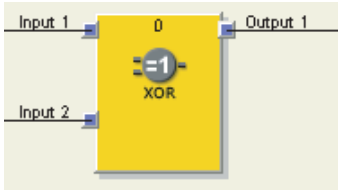

General description

The output is High only if both inputs are complementary (i.e. with contrary values: one input High and one input Low).

Truth table

The following applies for the truth table in this section:

“0” means logic Low.

“1” means logic High.

Truth table for XOR evaluation

Table 29: Truth table for XOR evaluation

Input 1	Input 2	Output 1
0	0	0
0	1	1
1	0	1
1	1	0

9.7.5 XNOR (exclusive NOR)

Function block diagram

Figure 105: Function block diagram for the Exclusive NOR (XNOR) function block

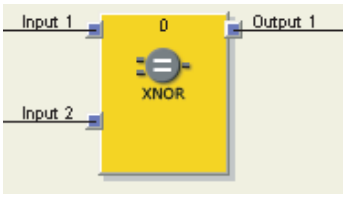

General description

The output is High only if both inputs are equivalent (have the same value: both inputs High or both inputs Low).

Truth table

The following applies for the truth table in this section:

“0” means logic Low.

“1” means logic High.

Truth table for XNOR evaluation

Table 30: Truth table for XNOR evaluation

Input 1	Input 2	Output 1
0	0	1
0	1	0
1	0	0
1	1	1

9.7.6 Multiple release

Function block diagram

Figure 106: Logic connections for the multiple release function block

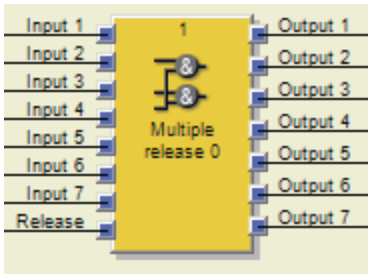

General description

Using the multiple release function block an AND operator can be applied to up to 7 inputs along with the Release input (7-times AND).

Function block parameters

Table 31: Parameters for the multiple release function block

Parameter	Possible values
Number of inputs (without Release input)	1 to 7
Invert input x	Each input of this function block can be inverted (see section 9.5.2)
Invert Release	

Truth table

For the truth table identified in this section, the following applies:

- “0” means logic low.
- “1” means logic high.

Table 32: Truth table for the multiple release function block

Release	Output X
0	0
1	Input x

9.7.7 RS Flip-Flop

Function block diagram

Figure 107: Function block diagram for the RS Flip-Flop function block

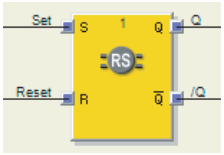

General description

The RS Flip-Flop function block stores the last value of the inputs **Set** or **Reset**. It is used as a simple storage cell. The **Reset** signal has a higher priority than the **Set** signal. If **Set** was High last, output **Q** is High and output **/Q** (Q inverted) is Low. If the **Reset** input was High last, output **Q** is Low and output **/Q** is High.

Parameters of the function block

Table 33: Parameters of the RS Flip-Flop function block

Parameter	Possible values
Invert Set	Each input of this function block can be inverted (see Section 9.5.2).
Invert Reset	

Truth table for the RS Flip-Flop function block

The following applies for the truth table in this section:

- “0” means logic Low.
- “1” means logic High.
- “n–1” references the preceding value.
- “n” references the current value.
- “x” means “any” = “0” or “1”.

Table 34: Truth table for the RS Flip-Flop function block

Set	Reset	Output Q_{n-1}	Output Q_n	Output $/Q_n$
0	0	0	0	1
0	0	1	1	0
0	1	x	0	1
1	0	x	1	0
1	1	x	0	1

9.7.8 JK Flip-Flop

Function block diagram

Figure 108: Function block diagram for the JK Flip-Flop function block

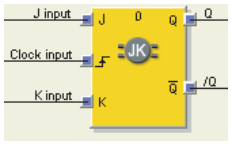

General description

The JK Flip-Flop function block has three inputs. The **J input** and **K input** have only an effect on the outputs when a rising edge is detected at the **Clock input**. In this case …

- If **J input** is High and **K input** is Low, the **Q** output will be High and the **/Q** (= Q inverted) output will be Low.
- If **J input** is Low and **K input** is High, the **Q** output will be Low and the **/Q** output will be High.
- If both inputs are Low, the last values of outputs **Q** and **/Q** will be held.
- If both inputs are High, the outputs will toggle, i.e. their last values will be inverted.

Parameters of the function block

Table 35: Parameters of the JK Flip-Flop function block

Parameter	Possible values
Number of outputs	• 1 (Q) • 2 (Q and /Q)
Invert J input	Each input of this function block can be inverted (see Section 9.5.2).
Invert Clock input	
Invert K input	

Truth table for the JK Flip-Flop function block

The following applies for the truth table in this section:

- “0” means logic Low.
- “1” means logic High.
- “↑” means that a rising edge has been detected at the input.
- “↓” means that a falling edge has been detected at the input.
- “n–1” references the preceding value.
- “n” references the current value.
- “x” means “any” = “0” or “1”.

Note The following truth table is valid for a configuration of the JK Flip-Flop function block with no input inverted.

Table 36: Truth table for the JK Flip-Flop function block

J input	K input	Clock input	Output Q_{n-1}	Output Q_n	Output $/Q_n$
x	x	0, 1 or ↓	0	0	1
x	x	0, 1 or ↓	1	1	0
0	0	↑	0	0	1
0	0	↑	1	1	0
0	1	↑	0	0	1
0	1	↑	1	0	1
1	0	↑	0	1	0
1	0	↑	1	1	0
1	1	↑	0	1	0
1	1	↑	1	0	1

9.7.9 Multiple memory

Function block diagram

Figure 109: Logic connections for the multiple memory function block

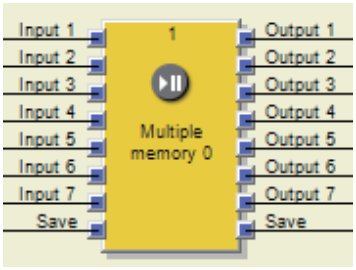

General description

Using the multiple memory function block the state of up to 7 inputs can either be forwarded unchanged or saved depending on the **Latch** input.

If the **Latch** input is low, the state of inputs 1 to 7 is forwarded unchanged to the outputs 1 to 7.

If the **Latch** input changes from low to high, then the current state of inputs 1 to 7 is saved and output on outputs 1 to 7 as long as the **Latch** input is high.

The **Latch** output corresponds to the **Latch** input.

Function block parameters

Table 37: Parameters for the multiple memory function block

Parameter	Possible values
Number of inputs (without Latch input)	1 to 7
Invert input x	Each input of this function block can be inverted (see section9.5.2).
Invert Save	

Truth table

For the truth table identified in this section, the following applies:

- “0” means logic low.
- “1” means logic high.
- "↑" means that a rising edge has been detected on the input.
- "n-1" refers to the previous value.
- "n" refers to the current value.

Table 38: Truth table for the multiple memory function block

Latch input	Latch output	Output X_n
0	0	Input x
↑	↑	Input x
1	1	Output x_{n-1}

9.7.10 Clock generator

Function block diagram

Figure 110: Function block diagram for the Clock generator function block

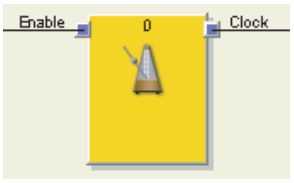

General description

The Clock generator function block is used to generate a pulsed signal. When the **Enable** input is High, the **Clock** output pulses from Low to High and back to Low in accordance with the parameter settings of the function block. When the **Enable** input is Low the **Clock** output becomes Low.

Figure 111: Parameter diagram for the Clock generator function block

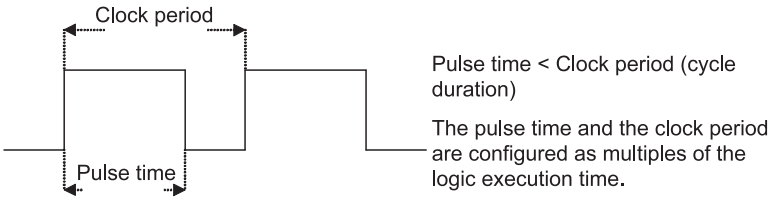

Parameters of the function block

Table 39: Parameters of the Clock generator function block

Parameter	Possible values
Stopping mode	• Immediately • After last clock
Clock period (cycle duration)	2 to 65535 Duration = Parameter value × Logic execution time
Pulse time	1 to 65534 Duration = Parameter value × Logic execution time The pulse time has to be lower than the clock period.

Note If the logic execution time of the configuration changes (e.g. through addition or subtraction of function blocks), the clock period and the pulse time will change.

Sequence/timing diagram

Figure 112: Timing diagram for the Clock generator function block

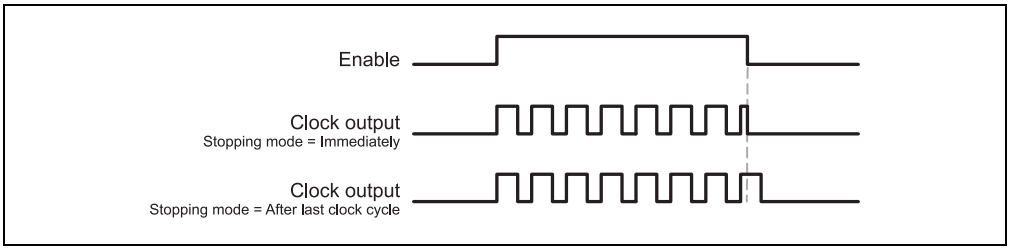

9.7.11 Event counter (Up, Down and Up and down)

Function block diagram

Figure 113: Function block diagram for the Event counter (Up and down) function block

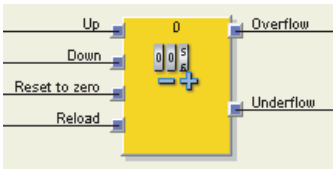

General description

The Event counter function blocks allow to count events, either upward and/or downward. When a pre-defined overflow value is reached, this will be indicated on the **Overflow** output or, when zero is reached, this will be indicated on the **Underflow** output. Depending on the required counting direction there are the function blocks Event counter (Up), Event counter (Down) and Event counter (Up and down).

Parameters of the function block

Table 40: Parameter for the Event counter function blocks

Parameter	Possible values
Counter reset	• Manual • Automatic
Counter reload	• Manual • Automatic
Overflow limit	Integer between 1 and 65,535. The overflow value limit has to be higher than or equal to the reload value.
Reload value	Integer between 1 and 65,535
Min. restart pulse time	• 100 ms • 350 ms
Min. reload pulse time	• 100 ms • 350 ms

Inputs Up and Down

A rising edge (Low to High) at the **Up** input increases the value of the internal counter by “1”.

A rising edge (Low to High) at the **Down** input decreases the value of the internal counter by “1”.

If a rising edge (Low to High) occurs at the **Up** input as well as at the **Down** input (applies only to the Up and down event counter function block), the value of the internal counter remains unchanged.

Reset to zero

A valid pulse sequence with a Low-High-Low transition at the **Reset to zero** input sets the internal counter to “0”. This happens irrespective of whether the **Overflow value** has been reached or not and also irrespective of whether **Reset to zero after overflow** has been configured to **Manual** or **Automatic**.

The **Min. restart pulse time** defines the minimum required duration of the pulse at the **Reset to zero** input. Valid values are 100 ms and 350 ms. If the pulse duration is shorter than the configured minimum pulse time or longer than 30 s, the pulse is ignored.

Reload

A valid pulse sequence with a Low-High-Low transition at the **Reload** input sets the internal counter to the configured value of the **Reload value** parameter. This happens irrespective of whether **Counter reload** has been configured to **Manual** or **Automatic**.

The **Min. reload pulse time** defines the minimum required duration of the pulse at the **Reload** input. Valid values are 100 ms and 350 ms. If the pulse duration is shorter than the configured minimum pulse time or longer than 30 s, the pulse is ignored.



ATTENTION

Ensure that the transitions of the signals for resetting or reloading value fulfill the requirements!

In case of a short-circuit to High (to 24 V DC) at a physical input, the evaluated signal can have a pulse when the signal is reset due to the short-circuit detection. If such a pulse can result in a dangerous state in the machine, the following points have to be observed:

- Ensure protected cable laying for the signal line (due to cross-circuiting to other signal lines).
- No short-circuit detection, i.e. do not reference to test outputs.

Overflow limit and Counter reset

The **Counter reset** parameter determines what happens when the counter value reaches the **Overflow limit**. If this parameter is configured to **Automatic**, and the internal counter equals the **Overflow limit**, the **Overflow** output becomes High for the duration of the logic execution time. The value of the internal counter is subsequently reset to zero.

If the **Counter reset** parameter is configured to **Manual** and the **Overflow limit** has been reached, the **Overflow** output is set to High and remains High until the counter value changes again, either by counting downward, by a valid **Reset to zero** pulse sequence or by a valid pulse sequence at the **Reload** input, if the start value is smaller than the overflow value. Until then, all further “Up” counting pulses are ignored.

Reload value and Counter reload

The **Counter reload** parameter determines what happens when the counter value reaches “0”. If this parameter is configured to **Automatic** and the internal counter equals “0”, the **Underflow** output becomes High for the duration of the logic execution time. The value of the internal counter is subsequently set to the configured **Reload value**.

If the **Counter reload** parameter is configured to **Manual** and the lower limit, i.e. “0”, has been reached, the **Underflow** output is set to High and remains High until the counter value changes again, either by counting upward or by a valid pulse sequence at the **Reload** input. Until then, all further “Down” counting pulses are ignored.

Truth table for the Event counter function blocks (Up, Down and Up and down)

The following applies for the truth table in this section:

- “0” means logic Low
- “1” means logic High
- “↑” means that a rising edge has been detected at the input
- “↓” means that a falling edge has been detected at the input
- “n–1” references the preceding value
- “n” references the current value
- “Y” references the value of the internal counter
- “X” means “any”. E.g. the **Reset to zero** input and the **Reload** input have priority over the **Up** input and the **Down** input.

Table 41: Truth table for the Event counter function blocks (Up, Down and Up/Down)

Up	Down	Reset to zero	Reload	Counter value$_{n-1}$	Counter value$_n$	Overflow $_n$	Underflow $_n$
↑	0, 1 or ↓	0	0	Y	Y+1	0	0
↑	0, 1 or ↓	0	0	Y	Y+1 = Overflow value	1	0
↑	0, 1 or ↓	0	0	Y = Overflow value	Y = Overflow value	1	0
0, 1 or ↓	↑	0	0	Y	Y–1	0	0
0, 1 or ↓	↑	0	0	Y	Y–1 = 0	0	1
0, 1 or ↓	↑	0	0	Y = 0	Y = 0	0	1
↑	↑	0	0	Y	Y	0	0
X	X	1	0	Y	Reset to zero	0	0
X	X	0	1	Y	Reload	0	0
X	X	1	1	Y	Reset to zero	0	0

9.7.12 Fast shut off and Fast shut off with bypass

Function block diagram

Figure 114:
Function block diagram for the Fast shut off and Fast shut off with bypass function blocks

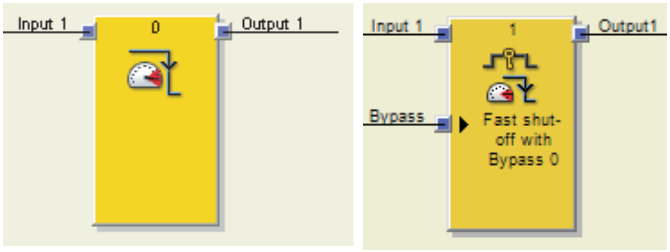

General description

The Fast shut off and Fast shut off with bypass function block is used to minimize the response time of a safety switching path within the MELSEC-WS safety controller. To use this block, both the input and output for the switching path must be connected to the same safety I/O module (i.e. WS0-XTIO). This is necessary because the Fast shut off function block generates a direct switch off at the safety I/O module resulting in a shorter switch off time which is independent of the logic execution time.

For the Fast shut off function block, the consequence of this is that logic between the Fast shut off input and the Fast shut off output cannot hinder a switch off when the Fast shut off is activated.

The Fast shut off with bypass function block however allows to temporarily bypass the Fast shut off function using the bypass input.

Note The Fast shut off with bypass function block is only available with WS0-XTIO with firmware version V2.00 or higher.

Example: In the following logic example, the C4000 will switch off the Q2 motor.

Figure 115:
Fast shut off example

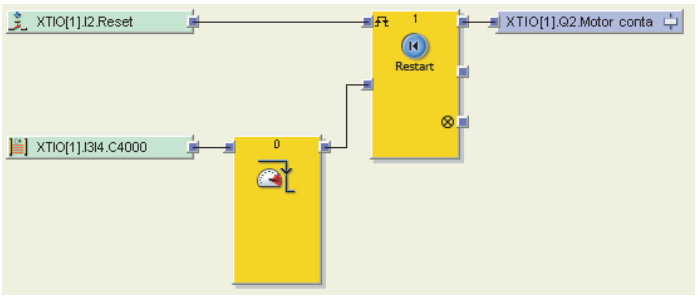

Simple logic such as this can be accomplished within the Fast shut off function block itself (see how to configure below).

Note The signal path from the output of the Fast shut off function block to the physical output that is selected in the Fast shut off function block must be configured in such a way that switching off of the output of the Fast shut off function block always results in a direct switching off of the physical output as well. Typically the AND, Restart or EDM function blocks can be used in the signal chain for this. An OR function block however does not comply to this rule.

ATTENTION

Always consider the total response time of the entire safety function!

The response time of the Fast shut off function block is not the same as the total response time of the entire safety function. The total response time includes multiple parameters outside of this function block. For a description of how to calculate the total response time of the MELSEC-WS safety controller please see the Safety Controller User's Manual.

Parameters of the function block

Table 42: Parameters of the Fast shut off function block

Parameter	Possible values
Number of inputs	Fast shut off: 1 to 8 Fast shut off with bypass: 1 to 7
Select output for fast shut off	All outputs of the safety I/O module whose inputs are connected to the function block, if the output is not already used for Fast shut off.

How to configure the Fast shut off function block:

The following example shows the function with three light curtains attached to a Fast shut off function block.

Figure 116: Configuration example for Fast shut off with three light curtains

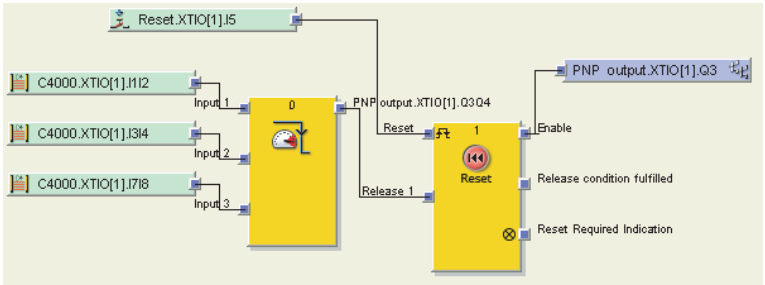

To configure the Fast shut off function block perform the following steps:

➢ Connect input elements to the function block. Double click the function block to open the configuration dialog and click the **I/O Settings** tab.

Figure 117: I/O settings dialog for the Fast shut off function block

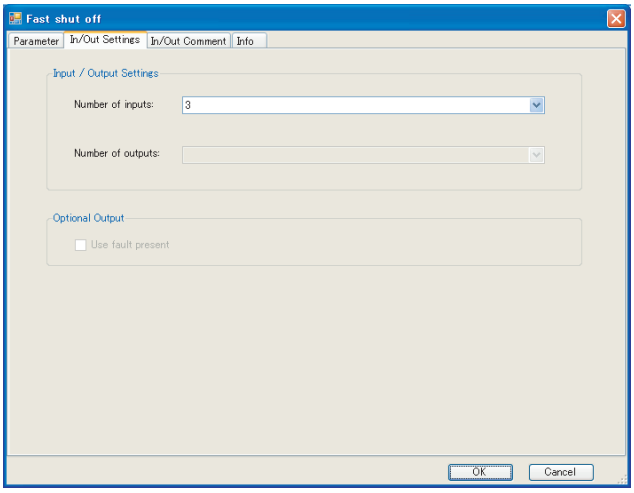

➢ Choose the number of inputs which you would like to attach to the function block.

➢ Then click the **Parameter** tab and choose the zone by checking the boxes.

Figure 118:
Parameter settings dialog for the Fast shut off function block

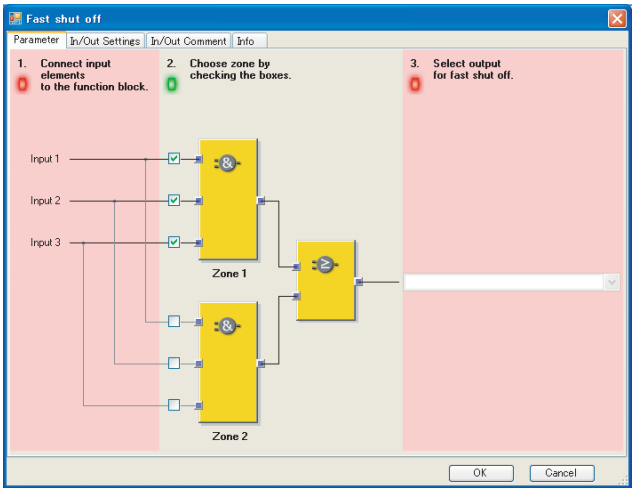

Note If only AND logic is needed, leave the Zone 2 AND function block inputs unchecked. If additional OR logic is required in the application, the inputs can be combined using the Zone 1 and Zone 2 AND function blocks and subsequently connecting to the internal OR function block.

➢ Finally select the output for Fast shut off.

Figure 119:
Output selection for Fast shut off

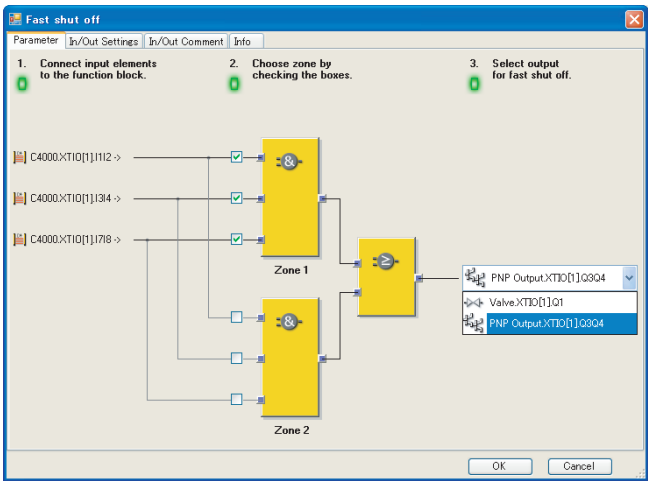

At this point, the selected inputs and outputs are linked to each other such that the output cannot be moved to another position and the inputs must stay on the WS0-XTIO module in the hardware configuration. The elements which are linked are shown in the hardware configuration in orange.

Figure 120:
Hardware configuration view of inputs and outputs linked to Fast shut off

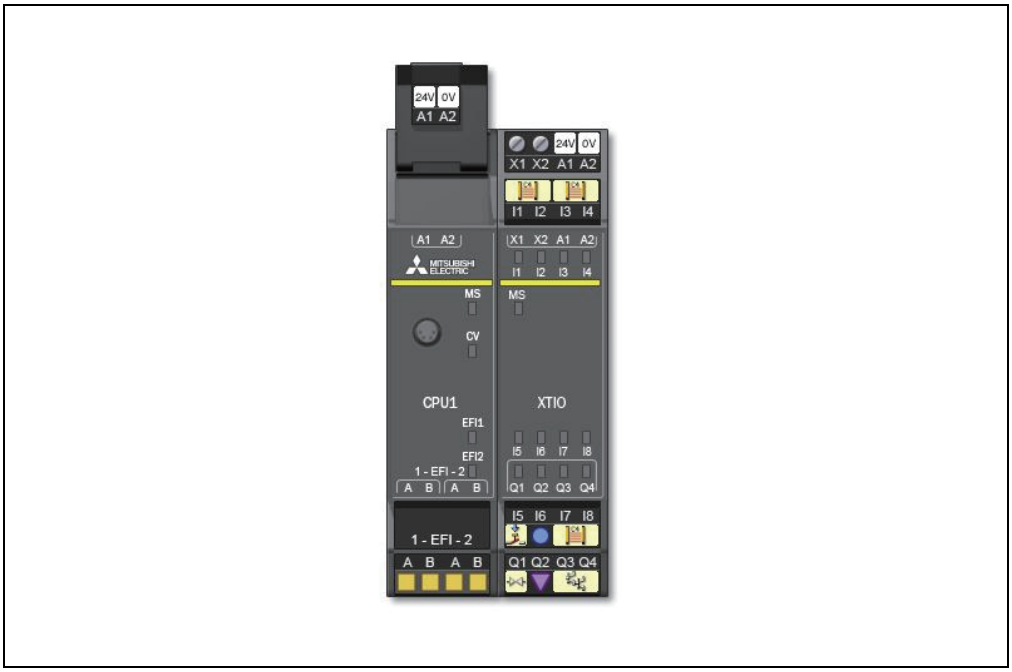

These links are broken when the Fast shut off function block is edited or deleted.

Fast shut off with bypass

In some applications it may be necessary to bypass the Fast shut off. This could be, e.g. in a safe machine setup mode, in which the machine can be operated only in jog mode. To this purpose, the Fast shut off with bypass function block is available. It is used and configured in the same way as the Fast shut off function block. The only difference is that one of the inputs of the Fast shut off with bypass function block is used for the Bypass function. If the **Bypass** input is High, the Fast shut off with bypass function block is bypassed.

ATTENTION

Ensure the system or machine is in a safe condition when using the bypass function!

As long as the bypass function is active, any stopping condition, e.g. the infringement of a protective field will **not** lead to a shut-off of the machine. You must ensure that other protective measures are forcibly activated during the bypass, e.g. the safe machine setup mode, so that the machine cannot endanger persons or parts of the system during the bypass function.

Take the prolonged response time into account when the Bypass is deactivated!

If the **Bypass** input is being deactivated while a switching-off condition exists, the outputs will switch off only with the normal response time of the application. The minimized response time for Fast shut off does not apply for the **Bypass** input. Consider this for your risk analysis and avoidance strategy. Otherwise the operator of the machine will be in danger.

Notes

- Unlike the other inputs and outputs of this function block, the **Bypass** input can be connected to an output of another function block as well as to any other input element which may also be moved to another module in the hardware configuration.
- The **Bypass** input has an on-delay of 3 logic cycles to compensate delays due to logic processing time and transmission time of the FLEXBUS+. The delay ensures that the I/O module has received the bypass signal before it is used for the further logic processing in the Fast shut off function block. As a result of the delay, the **Bypass** input must be High 3 logic cycles in advance to successfully inhibit the fast shut off. If this condition is fulfilled, then the Fast shut off output of the function block and the physical output at the I/O module will both remain High.
- The Fast shut off directly switches off the connected output of the WS0-XTIO while subsequent logic will be ignored. Therefore it is not possible to implement further bypass conditions in the logic editor between the output of the Fast shut off function block and the connected WS0-XTIO.
- Be aware that in the logic online monitor the value of the connected WS0-XTIO output may differ from the effective value at the physical output of the WS0-XTIO. For example the connected output can be Low as a result of the subsequent logic while the output of the Fast shut off function block and the physical output of the WS0-XTIO High because the **Bypass** input is High.
- If your application requires that the output of the WS0-XTIO module can be switched off independently of an existing bypass condition (e.g. emergency stop), then the underlying logic must be realised in a way that the respective shut-down signal (e.g. emergency stop) switches off the bypass signal for the function block as well, as shown in the following example:

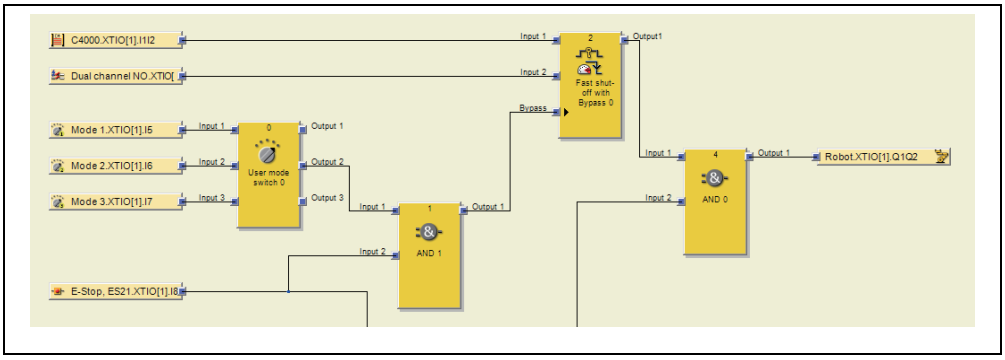

Figure 121:
Example for Fast shut off with bypass with more than one bypass conditions

9.7.13 Edge detection

one bypass conditions**Function block diagram**

Figure 122:
Function block diagram for the Edge detection function block

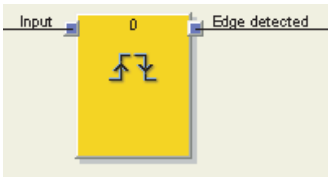

General description

The Edge detection function block is used to detect a positive (rising) or negative (falling) edge of the input signal. The function block can be configured to detect a positive edge, a negative edge or both. If an edge corresponding to the parameter settings is detected, the **Edge Detected** output changes to High for the duration of the logic execution time.

Parameters of the function block

Table 43:
Parameters of the Edge detection function block

Parameter	Possible values
Edge detection	• Positive • Negative • Positive and negative

Sequence/timing diagram

Figure 123:
Timing diagram for the Edge detection function block

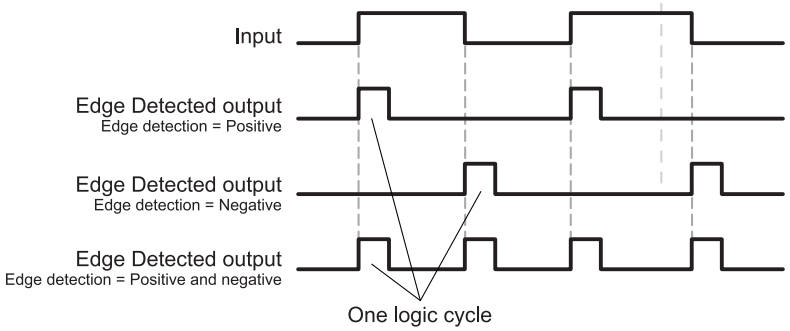

9.7.14 Binary encoder

Function block diagram

Figure 124:
Function block diagram for the Binary encoder function block

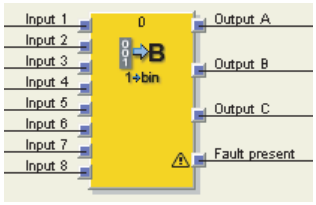

General description

The Binary encoder function block encodes depending on the current configuration a one-out-of-N (one-hot) or a priority code to a binary code (Output A = 2^0, Output B = 2^1, Output C = 2^2). 2 to 8 inputs can be configured. The number of outputs depends on the number of inputs. An optional **Fault present** output is available.

Parameters of the function block

Table 44:
Parameters of the Binary encoder function block

Parameter	Possible values
Number of inputs	2 to 8
Encoder mode	• One out of N • Priority • Priority-to-binary (Input 1 dominant)
Use fault present	• With • Without

One out of N

In **One out of N** mode, only one input may be High at the same time. The outputs are set dependent on the index (input 1 = 1, input 2 = 2, …) of the High input. If all inputs are Low or if more than one input is High at the same time, all outputs are set to Low and **Fault present** becomes High.

Priority

In **Priority** mode, more than one input may be High at a time. The outputs are set dependent on the High input with the highest index (input 1 = 1, input 2 = 2, …). If all inputs are Low at the same time, all outputs are set to Low and **Fault present** becomes High.

Priority-to-binary (input 1 dominant)

In this mode, all outputs are set to Low, if input 1 is High, regardless of the other inputs. If input 1 is Low, the function block behaves as in **Priority** mode. If all inputs are Low at the same time, all outputs are set to Low and **Fault present** becomes High.

Truth tables for the Binary encoder function block

The following applies for the truth tables in this section:

- “0” means logic Low.
- “1” means logic High.
- “x” means “any” = “0” or “1”.

Table 45:
Truth table for the Binary encoder function block with 2 inputs in One out of N mode

Input 2	Input 1	Output A	Fault present
0	0	0	1
0	1	0	0
1	0	1	0
1	1	0	1

Input 8	Input 7	Input 6	Input 5	Input 4	Input 3	Input 2	Input 1	Output C	Output B	Output A	Fault present
0	0	0	0	0	0	0	0	0	0	0	1
0	0	0	0	0	0	0	1	0	0	0	0
0	0	0	0	0	0	1	0	0	0	1	0
0	0	0	0	0	1	0	0	0	1	0	0
0	0	0	0	1	0	0	0	0	1	1	0
0	0	0	1	0	0	0	0	1	0	0	0
0	0	1	0	0	0	0	0	1	0	1	0
0	1	0	0	0	0	0	0	1	1	0	0
1	0	0	0	0	0	0	0	1	1	1	0
More than one input = 1								0	0	0	1

Table 46:
Truth table for the Binary encoder function block with 8 inputs in One out of N mode

Table 47:
Truth table for the Binary encoder function block with 2 inputs in Priority mode

Input 2	Input 1	Output A	Fault present
0	0	0	1
0	1	0	0
1	x	1	0

Input 8	Input 7	Input 6	Input 5	Input 4	Input 3	Input 2	Input 1	Output C	Output B	Output A	Fault present
0	0	0	0	0	0	0	0	0	0	0	1
0	0	0	0	0	0	0	1	0	0	0	0
0	0	0	0	0	0	1	x	0	0	1	0
0	0	0	0	0	1	x	x	0	1	0	0
0	0	0	0	1	x	x	x	0	1	1	0
0	0	0	1	x	x	x	x	1	0	0	0
0	0	1	x	x	x	x	x	1	0	1	0
0	1	x	x	x	x	x	x	1	1	0	0
1	x	x	x	x	x	x	x	1	1	1	0

Table 48:
Truth table for the Binary encoder function block with 8 inputs in Priority mode

Table 49:
Truth table for the Binary encoder function block with 2 inputs in Priority mode with dominant input 1

Input 2	Input 1	Output A	Fault present
0	0	0	1
x	1	0	0
1	0	1	0

Input 8	Input 7	Input 6	Input 5	Input 4	Input 3	Input 2	Input 1	Output C	Output B	Output A	Fault present
0	0	0	0	0	0	0	0	0	0	0	1
x	x	x	x	x	x	x	1	0	0	0	0
0	0	0	0	0	0	1	0	0	0	1	0
0	0	0	0	0	1	x	0	0	1	0	0
0	0	0	0	1	x	x	0	0	1	1	0
0	0	0	1	x	x	x	0	1	0	0	0
0	0	1	x	x	x	x	0	1	0	1	0
0	1	x	x	x	x	x	0	1	1	0	0
1	x	x	x	x	x	x	0	1	1	1	0

Table 50:
Truth table for the Binary encoder function block with 8 inputs in Priority mode with dominant input 1



ATTENTION

Evaluate Fault present if the Binary encoder function block is used for safety purposes!

If you use the Binary encoder function block for safety relevant logic, you may have to evaluate the **Fault present** output depending on your application. This is the only way to distinguish whether only input 1 is High or if an invalid input state exists. In both cases, all outputs will be Low.

9.7.15 Binary decoder

Function block diagram

Figure 125:
Function block diagram for the Binary decoder function block

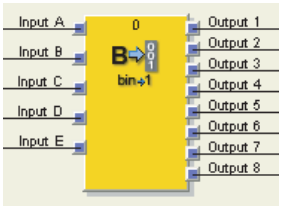

General description

The Binary decoder function block decodes dependent on the current configuration a binary code to a one-out-of-N (one-hot) or to a priority code. Up to 5 inputs can be configured. The number of outputs depends on the number of inputs. Evaluating inputs A, B and C allows to encode binary codes with decimal values from 0 to 7 with a single Binary decoder function block (input A = 2^0, input B = 2^1, input C = 2^2). By using the optional inputs D and E it is possible to combine up to four Binary decoder function blocks in order to encode binary codes with decimal values from 0 to 31.

Parameters of the function block

Table 51:
Parameters of the Binary decoder function block

Parameter	Possible values
Encoder mode	• One out of N • Priority
Inputs	• Not inverted • Inverted
Number of inputs	1 to 5
Value range	• 0-7 • 8-15 (only available if more than 4 inputs are used) • 16-23 (only available if 5 inputs are used) • 24-31 (only available if 5 inputs are used)

One out of N

In **One out of N** mode, only the output with the number that corresponds to the current input values will be High.

Priority

In **Priority** mode, the output with the number that corresponds to the current input values and all outputs with lower numbers will be High.

Inputs inverted/not inverted

Using this parameter it is possible to invert all input values.

Truth tables for the Binary decoder function block

The following applies for the truth table in this section:

- “0” means logic Low.
- “1” means logic High.

Table 52:
Truth table for the Binary decoder with 1 input in One out of N mode

Input A	Output 2	Output 1
0	0	1
1	1	0

Table 53:
Truth table for the Binary decoder with 2 inputs in One out of N mode

Input B	Input A	Output 4	Output 3	Output 2	Output 1
0	0	0	0	0	1
0	1	0	0	1	0
1	0	0	1	0	0
1	1	1	0	0	0

Input C	Input B	Input A	Output 8	Output 7	Output 6	Output 5	Output 4	Output 3	Output 2	Output 1
0	0	0	0	0	0	0	0	0	0	1
0	0	1	0	0	0	0	0	0	1	0
0	1	0	0	0	0	0	0	1	0	0
0	1	1	0	0	0	0	1	0	0	0
1	0	0	0	0	0	1	0	0	0	0
1	0	1	0	0	1	0	0	0	0	0
1	1	0	0	1	0	0	0	0	0	0
1	1	1	1	0	0	0	0	0	0	0

Table 54:
Truth table for the Binary decoder with 3 inputs in One out of N mode

Table 55:
Truth table for the Binary decoder with 1 input in Priority mode

Input A	Output 2	Output 1
0	0	1
1	1	1

Table 56:
Truth table for the Binary decoder with 2 inputs in Priority mode

Input B	Input A	Output 4	Output 3	Output 2	Output 1
0	0	0	0	0	1
0	1	0	0	1	1
1	0	0	1	1	1
1	1	1	1	1	1

Input C	Input B	Input A	Output 8	Output 7	Output 6	Output 5	Output 4	Output 3	Output 2	Output 1
0	0	0	0	0	0	0	0	0	0	1
0	0	1	0	0	0	0	0	0	1	1
0	1	0	0	0	0	0	0	1	1	1
0	1	1	0	0	0	0	1	1	1	1
1	0	0	0	0	0	1	1	1	1	1
1	0	1	0	0	1	1	1	1	1	1
1	1	0	0	1	1	1	1	1	1	1
1	1	1	1	1	1	1	1	1	1	1

Table 57:
Truth table for the Binary decoder with 3 inputs in Priority mode

Evaluation of more than three inputs

If 4 or 5 inputs are used, up to four Binary decoder function blocks can be combined in order to encode binary codes with values from 0 to 31.

Figure 126:
Combination of four Binary decoder function blocks

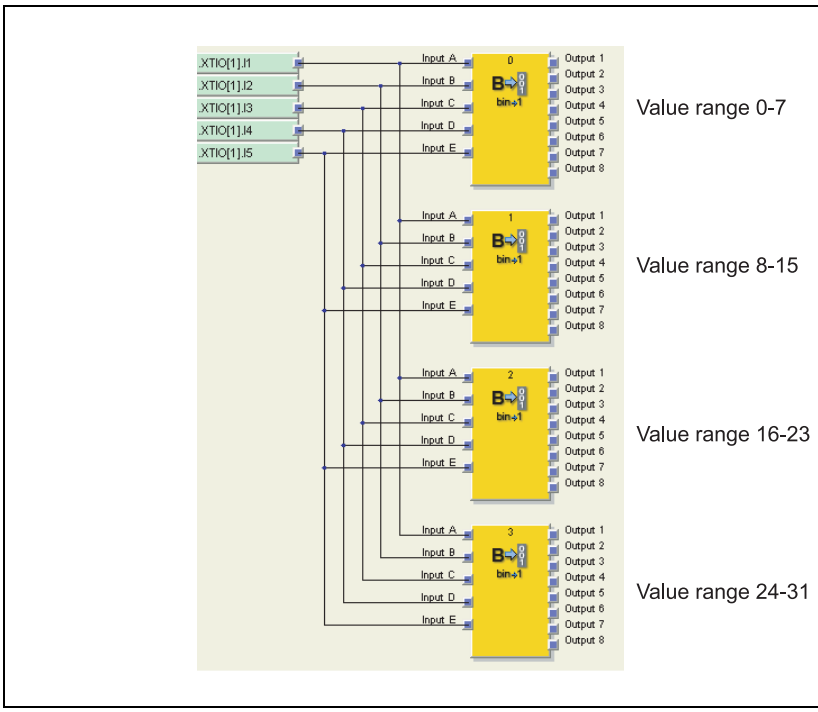

When using multiple Binary decoder function blocks in combination you have to configure the **Value range** option of each function block for the value range it shall cover. This range depends on the values of inputs D and E.

Table 58:
Value range of the Binary decoder function block depending on input D

Input D	Outputs
0	0-7
1	8-15

Table 59:
Value range of the Binary decoder function block depending on inputs D and E

Input E	Input D	Outputs
0	0	1-7
0	1	8-15
1	0	16-23
1	1	24-31

- If **Input D** and **Input E** are set to the same value as the **Value range** parameter (e.g. if **Input E** = 1, **Input D** = 0 and **Value range** is set to 16-23), the function block will behave as shown in the truth tables above, depending on the values of inputs A, B and C and the configured Encoder mode (**One out of N** or **Priority**).
- If **Input D** and **Input E** are set to a lower value than the **Value range** parameter (e.g. **Input E** = 0, **Input D** = 1 and **Value range** = 16-23) all outputs are Low independent of the configured Encoder mode (**One out of N** or **Priority**).
- If **Input D** and **Input E** are set to a higher value than the **Value range** parameter (e.g. **Input E** = 1, **Input D** = 1 and **Value range** = 16-23) …
  - in **One out of N** mode, all outputs are set to Low,
  - in **Priority** mode, all outputs are set to High.

9.7.16 Log generator

Function block diagram

Figure 127: Function block diagram for the Log generator function block

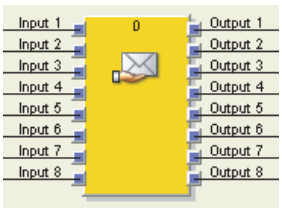

General description

The Log generator function block monitors up to eight inputs. If at one of these inputs an edge is detected according to the configuration, the function block sets the corresponding output to High for the duration of the logic execution time and adds a user defined text message to the diagnostics history. This can be read out in online mode using the Setting and Monitoring Tool diagnostic function (see Section 5.8).

Note These messages will be deleted when the voltage supply for the MELSEC-WS safety controller is interrupted.

Parameters of the function block

Table 60: Parameters of the Log generator function block

Parameter	Possible values
Number of inputs	1 to 8
Messages	Up to 64 user defined messages per project.
Message assignment	• Rising edge • Falling edge • Rising or falling edge

How to configure the Log generator function block:

The following example shows the Log generator function block with two emergency stop buttons and a safety switch attached.

Figure 128: Configuration example for Log generator with two emergency stop buttons and a safety switch

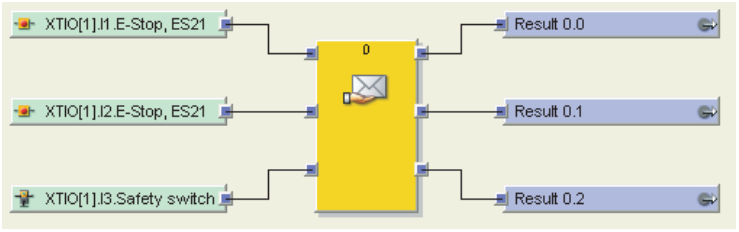

To configure the Log generator function block, proceed as follows:

➢ Connect input elements to the function block. Double click on the function block to open the configuration dialog and click then on the **I/O settings** tab.

Figure 129:
I/O settings for the Log generator function block

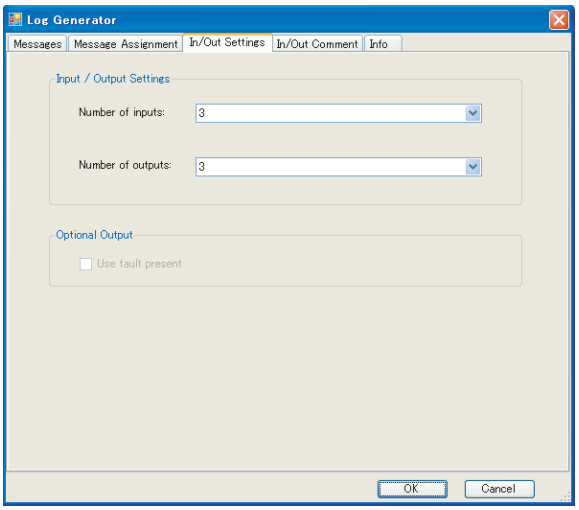

➢ Choose the number of inputs that you wish to attach to the function block.

➢ Then click the **Messages** tab and enter the messages that shall be output in the diagnostics.

Figure 130:
Messages of the Log generator function block

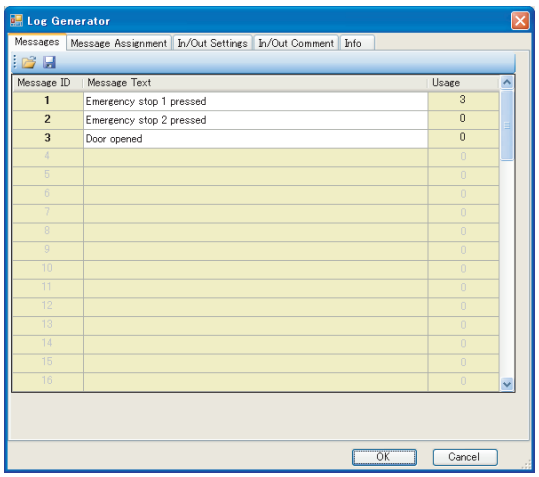

Note

– The messages entered are valid globally for all Log generator function blocks used in a project.

– In a single project, you can enter up to 64 different messages with a length of up to 32767 characters each.

– Using the **Import from CSV** and **Export to CSV** buttons at the top left of the window, you can save the messages to a text file in CSV (comma separated values) format or import messages from a CSV file.

➢ Then click the **Message assignment** tab. Assign the desired message to each used input and choose the input condition that must be fulfilled for the related message to be sent (rising edge, falling edge or rising and falling edge).

Note

The message assignment can not be exported or imported.

Figure 131: Message assignment for the Log generator function block

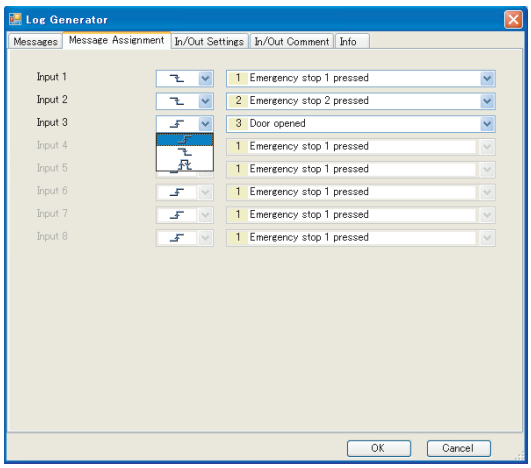

Message priority

If more than one conditions are fulfilled at the same time, the following priorities apply:

- On a single Log generator function block, the input with the lower number is prioritized, i.e. the message triggered by this input will be logged first.
- If several Log generator function blocks are used, the function block with the lower function block index is prioritized, i.e. the messages generated by this function block will be logged first.

9.7.17 Routing 1:N

Function block diagram

Figure 132: Function block diagram for the Routing 1:N function block

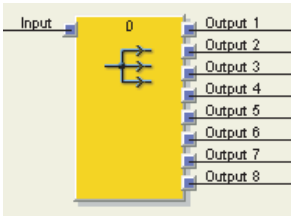

General description

The Routing 1:N function block passes an input signal from a preceding function block to up to eight output signals. This function block makes it possible to connect an output of a function block or an input element with several output elements (e.g. outputs of a WS0-XTIO module, CPU marker). It is not needed, however, for the connection to several function block inputs, because this can be done directly.

Parameters of the function block

Table 61: Parameters of the Routing 1:N function block

Parameter	Possible values
Number of outputs	1 to 8

9.7.18 Routing N:N

Function block diagram

Figure 133:
Function block diagram for the Routing N:N function block

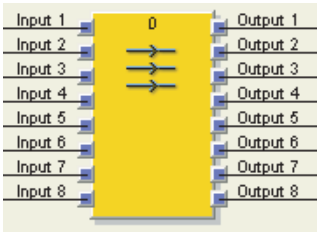

General description

The Routing N:N function block passes up to eight input signals parallel to up to eight outputs. The input signal can originate from a preceding function block or directly from a physical input.

Parameters of the function block

Table 62:
Parameters of the Routing N: N function block

Parameter	Possible values
Number of inputs	1 to 8
Invert input x	Each input of this function block can be inverted (see Section 9.5.2).

9.8 Application-specific function blocks

9.8.1 Reset

Function block diagram

Figure 134:
Function block diagram for the Reset function block

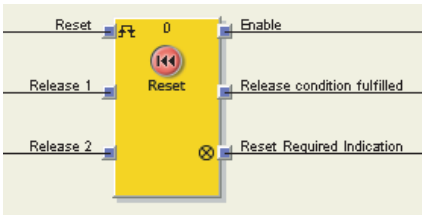

General description

The Reset function block can be used to fulfill the normative requirements for safety applications on acknowledging a manual safety stop and the subsequent request to restart the application. Typically, each safety logic system of a MELSEC-WS safety controller contains a Reset function block.

Parameters of the function block

Table 63:
Parameters of the Reset function block

Parameter	Possible values
Min. reset pulse time	• 100 ms • 350 ms
Number of inputs	2 to 8 (= 1 to 7 Release inputs activated)

Release condition fulfilled output

The **Release condition fulfilled** output displays the result of an AND combination of all activated **Release** inputs. It is High if all activated **Release** inputs are High.

Reset required output

The **Reset required** output shows by pulsing at 1 Hz that the function block expects a valid reset pulse at the **Reset** input so that the **Enable** output can become High. This is the case if the **Release condition fulfilled** output is High, i.e. all activated **Release** inputs are High, but the **Enable** output is still Low. Typically this output is used to control a signal lamp.

Enable output

The **Enable** output becomes High, if the **Release condition fulfilled** output is High and a valid reset pulse has been detected at the **Reset** input, provided that all activated **Release** inputs remain High.

The **Min. reset pulse time** defines the minimum required duration of the pulse at the **Reset** input. Valid values are 100 ms and 350 ms. If the pulse duration is shorter than the configured minimum pulse time or longer than 30 s, the pulse is ignored.

The **Enable** output becomes Low, if one or more **Release** inputs become Low.

ATTENTION

Ensure that the transitions of the signals for resetting fulfill the requirements!

In case of a short-circuit to High (to 24 V DC) at a physical input, the evaluated signal can have a pulse when the signal is reset due to the short-circuit detection. If such a pulse can result in a dangerous state in the machine, the following points have to be observed:

- Ensure protected cable laying for the signal line (due to cross-circuiting to other signal lines).
- No short-circuit detection, i.e. do not reference to test outputs.

Sequence/timing diagram

Figure 135: Sequence/timing diagram for the Reset function block

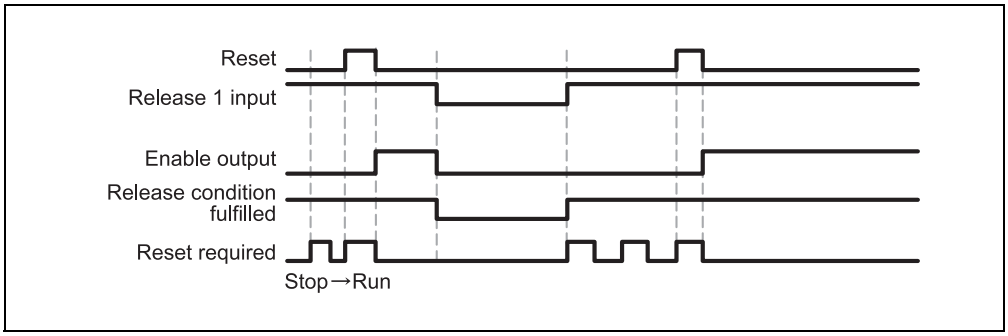

9.8.2 Restart

Function block diagram

Figure 136: Function block diagram for the Restart function block

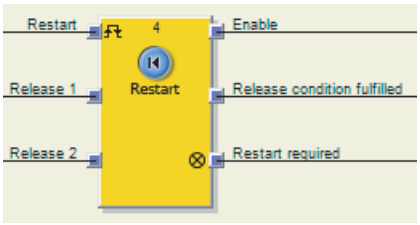

General description

The internal logic of the Restart function block has the same functionality as the Reset function block. The Restart function block allows graphic differentiation between the function blocks with regard to the observation of application standards for acknowledging a manual restart request.

Parameters of the function block

Table 64: Parameters of the Restart function block

Parameter	Possible values
Min. restart pulse time	• 100 ms • 350 ms
Number of inputs	2 to 8 (= 1 to 7 Release inputs activated)

Release condition fulfilled output

The **Release condition fulfilled** output displays the result of an AND combination of all activated **Release** inputs. It is High if all activated **Release** inputs are High.

Restart required output

The **Restart required** output shows by pulsing at 1 Hz that the function block expects a valid restart pulse at the **Restart** input so that the **Enable** output can become High. This is the case if the **Release condition fulfilled** output is High, i.e. all activated **Release** inputs are High, but the **Enable** output is still Low. Typically this output is used to control a signal lamp.

Enable output

The **Enable** output becomes High, if the **Release condition fulfilled** output is High and a valid restart pulse has been detected at the **Restart** input, provided that all activated **Release** inputs remain High.

The **Min. restart pulse time** defines the minimum required duration of the pulse at the **Restart** input. Valid values are 100 ms and 350 ms. If the pulse duration is shorter than the configured minimum pulse time or longer than 30 s, the pulse is ignored.

The **Enable** output becomes Low, if one or more **Release** inputs become Low.

ATTENTION

Ensure that the transitions of the signals for restarting fulfill the requirements!

In case of a short-circuit to High (to 24 V DC) at a physical input, the evaluated signal can have a pulse when the signal is reset due to the short-circuit detection. If such a pulse can result in a dangerous state in the machine, the following points have to be observed:

- Ensure protected cable laying for the signal line (due to cross-circuiting to other signal lines).
- No short-circuit detection, i.e. do not reference to test outputs.

Sequence/timing diagram

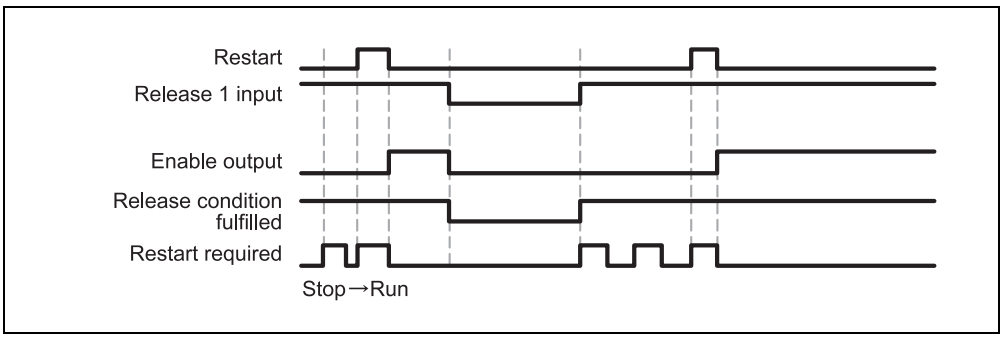

Figure 137: Sequence/timing diagram for the Restart function block

9.8.3 Off-delay timer

Function block diagram

Figure 138:
Function block diagram for the Off-delay timer function block

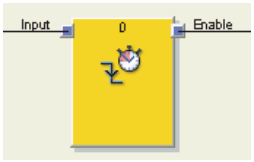

General description

The Off-delay timer function block delays the switching-off of the output signal by a configurable duration.

Parameters of the function block

Table 65:
Parameters of the Off-delay timer function block

Parameter	Possible values
Delay time	0 = disabled. 0 to 300 seconds in steps of 10 ms. If the value is not 0, it has to be greater than the logic execution time.

The timer begins with the delay sequence when a falling edge (High to Low) on the input occurs. If the timer has expired after the configured delay period, the **Enable** output changes also to Low, provided the input remains Low. If the input changes to High, the **Enable** output is set to High immediately and the delay timer is reset.

Sequence/timing diagram

Figure 139:
Sequence/timing diagram for the Off-delay timer function block

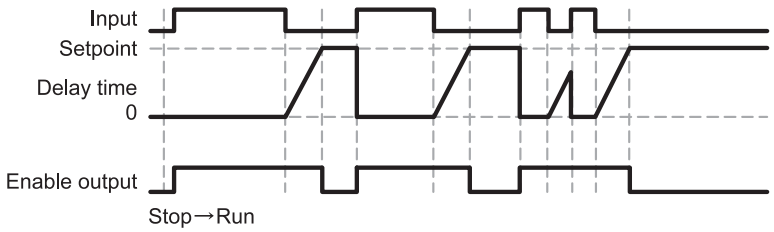

9.8.4 Adjustable off-delay timer

Function block diagram

Figure 140: Function block diagram for the Adjustable off-delay timer function block

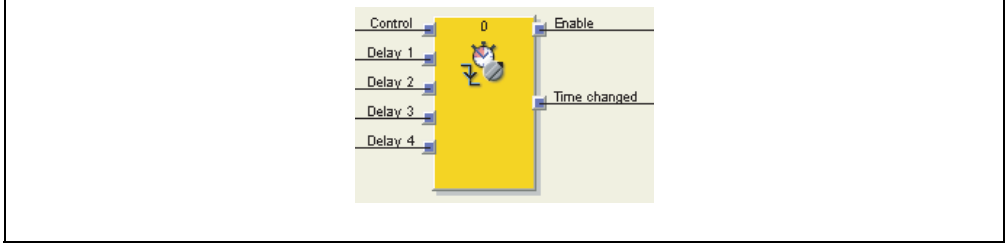

General description

The Adjustable off-delay timer function block delays the switching-off of the **Enable** output by an adjustable duration. Four individual delay times can be configured, each of which can be activated via a related **Delay** input. The overall delay is the sum of all activated delay times.

Parameters of the function block

Table 66: Parameters of the Adjustable off-delay timer function block

Parameter	Possible values
Off delay time 1	0 = disabled. 0 to 600 seconds in steps of 10 ms. If the value is not 0, the related input is activated. In this case, the value has to be greater than the logic execution time. The overall delay (sum of all delay times) is limited to 600 seconds.
Off delay time 2	
Off delay time 3	
Off delay time 4	

The timer begins with the delay sequence when a falling edge (High to Low) occurs at the **Control** input. If the timer has expired after the selected overall delay period, the **Enable** output changes also to Low, provided the **Control** input remains Low. If the **Control** input changes to High, the **Enable** output is set to High immediately and the delay timer is reset.

If during a running delay sequence any **Delay** input changes its value, the **Time changed** output changes to High and remains High until the **Control** input becomes High again.

The effective overall delay time depends on the **Delay** inputs that were High at the moment when the falling edge at the **Control** input has occurred. This means that a change on the **Delay** inputs during a delay sequence has no effect on the current delay sequence.

If the **Control** input is Low in the first logic cycle after transition from the Stop state to the Run state, the **Enable** output remains Low as well.

Sequence/timing diagram

Figure 141: Sequence/timing diagram for the Adjustable off-delay timer function block with Off delay time 1 and Off delay time 2

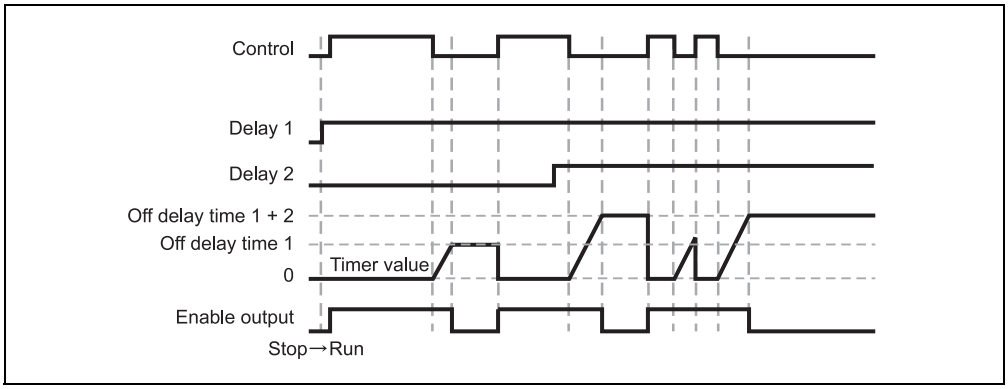

9.8.5 On-delay timer

Function block diagram

Figure 142:
Function block diagram for the On-delay timer function block

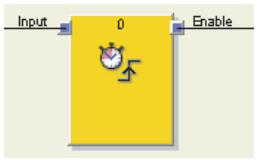

General description

The On-delay timer function block delays the switching-on of the output signal by a specified duration.

Parameters of the function block

Table 67:
Parameters of the On-delay timer function block

Parameter	Possible values
Delay time	0 = disabled. 0 to 300 seconds in steps of 10 ms. If the value is not 0, it has to be greater than the logic execution time.

The timer begins with the delay sequence when a rising edge (Low to High) on the input occurs. If the timer has expired after the configured delay period, the **Enable** output changes also to High, provided the input remains High. If the input changes to Low, the **Enable** output is set to Low immediately and the delay timer is reset.

Sequence/timing diagram

Figure 143:
Sequence/timing diagram for the On-delay timer function block

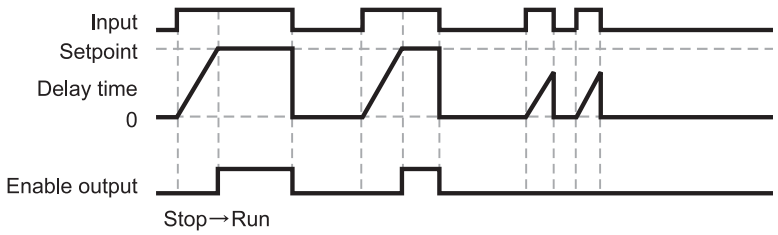

9.8.6 Adjustable on-delay timer

Function block diagram

Figure 144:
Function block diagram for the Adjustable on-delay timer function block

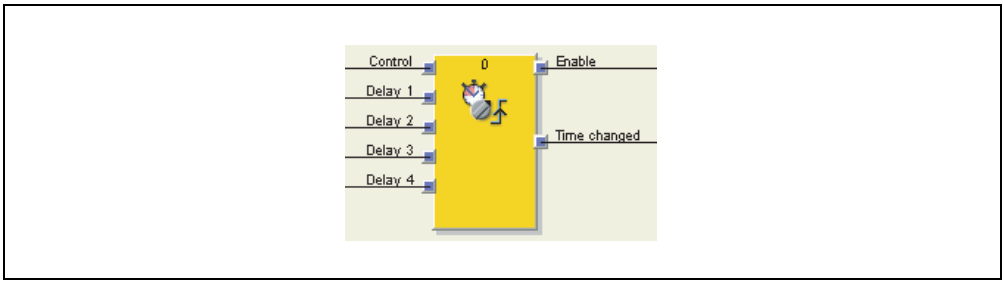

General description

The Adjustable on-delay timer function block delays the switching-on of the **Enable** output by an adjustable duration. Four individual delay times can be configured, each of which can be activated via a related **Delay** input. The overall delay is the sum of all activated delay times.

Parameters of the function block

Table 68:
Parameters of the Adjustable on-delay timer function block

Parameter	Possible values
On delay time 1	0 = disabled. 0 to 600 seconds in steps of 10 ms. If the value is not 0, the related input is activated. In this case, the value has to be greater than the logic execution time. The overall delay (sum of all delay times) is limited to 600 seconds.
On delay time 2	
On delay time 3	
On delay time 4	

The timer begins with the delay sequence when a rising edge (Low to High) occurs at the **Control** input. If the timer has expired after the selected overall delay period, the **Enable** output changes also to High, provided the **Control** input remains High. If the **Control** input changes to Low, the **Enable** output is set to Low immediately and the delay timer is reset.

If during a running delay sequence any **Delay** input changes its value, the **Time changed** output changes to High and remains High until the **Control** input becomes Low again.

The effective overall delay time depends on the **Delay** inputs that were High at the moment when the rising edge at the **Control** input has occurred. This means that a change on the **Delay** inputs during a delay sequence has no effect on the current delay sequence.

If the **Control** input is High in the first logic cycle after transition from the Stop state to the Run state, the **Enable** output becomes High immediately without delay.

Sequence/timing diagram

Figure 145:
Sequence/timing diagram for the Adjustable on-delay timer function block with On delay time 1 and On delay time 2

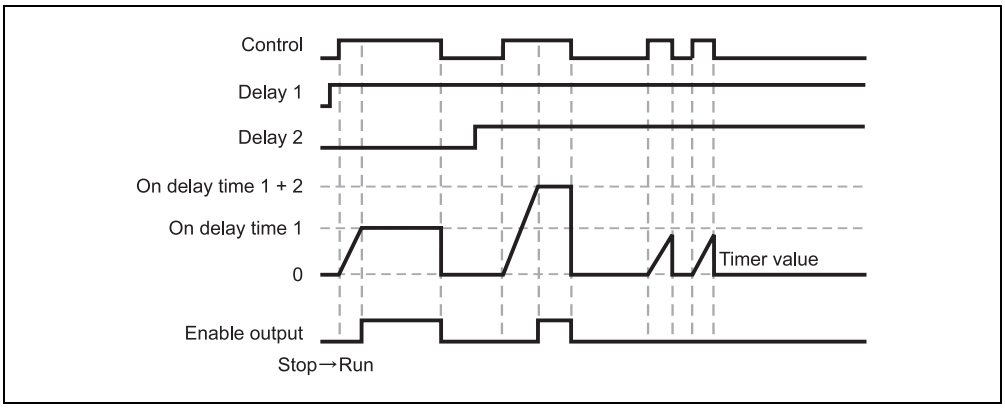

9.8.7 EDM (External device monitoring)

Function block diagram

Figure 146:
Function block diagram for the EDM function block

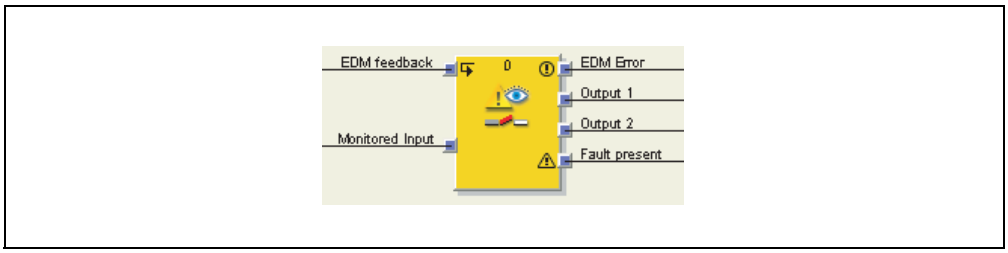

General description

The EDM (External device monitoring) function block allows to control an external device (e.g. a contactor) and to check on the basis of its feedback signal whether it has switched as expected. To this purpose the external device is connected to **Output 1** and/or **Output 2**. The feedback signal is connected to the **EDM feedback** input. The **Monitored input** is connected to the logic signal that represents the desired state for the external device, e.g. the **Enable** output of a Reset function block.

Parameters of the function block

Table 69:
Parameters of the EDM function block

Parameter	Possible values
Max. feedback delay	10 to 1,000 ms in 10 ms steps. The value has to be greater than the logic execution time.
Use fault present	• With • Without
Use Error reset	

Output 1 and Output 2

Both outputs have always the same value. This way, two outputs are available to connect two output elements directly.

Output 1 and **Output 2** become High, if the **EDM feedback** is High and the **Monitored input** changes from Low to High subsequently.

Output 1 and **Output 2** become Low, if the **Monitored input** is Low or if an EDM error is present (**EDM error** output is High).

EDM error and Fault present

Generally it is expected that the **EDM feedback** input always takes the inverted value of the **Monitored input** before the configured **Max. feedback delay** (T_{EDM}) has expired.

The **EDM error** and **Fault present** outputs become High, if …

- the **Monitored input** changes from Low to High and the **EDM feedback** input is Low (irrespective of T_{EDM}), or
- the **Monitored input** changes from Low to High and the **EDM feedback** input does not change from High to Low before T_{EDM} has expired, or
- the **Monitored input** changes from High to Low and the **EDM feedback** input does not change from Low to High before T_{EDM} has expired, or
- the **Monitored input** is Low and the **EDM feedback** input changes to Low for longer than T_{EDM}, or
- the **Monitored input** is High and the **EDM feedback** input changes to High for longer than T_{EDM}.

The **EDM error** and **Fault present** outputs become Low, if a signal sequence is detected that sets **Output 1** and **Output 2** to High.

Alternatively an error can also be reset with the aid of the Error reset input (from firmware V3.02). The EDM error and Fault present outputs change to low if the Error reset input changes from low to high and one of the two following conditions is met:

- The Control input is low and the EDM feedback is high.

Or:

- The Control input is high and the EDM feedback is low.

Only if the second of these two possible conditions is met are the outputs Output 1 and Output 2 also high.

Note If you require a delay of the **Output 1** and **Output 2** signals, then you have to realize the output delay with another function block before the EDM function block and not after it. Otherwise this can result in an EDM error.

Sequence/timing diagram

Figure 147: Sequence/timing diagram for the External device monitoring (EDM) function block

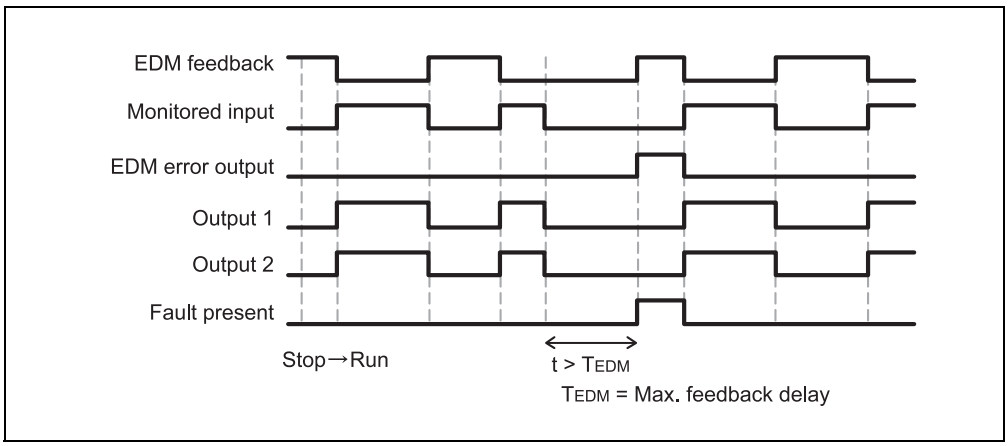

9.8.8 Valve monitoring

Function block diagram

Figure 148: Function block diagram for the Valve monitoring function block, configured for a directional valve

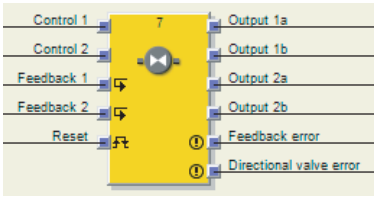

General description

The Valve monitoring function block allows to control valves and to check on the basis of their feedback signals whether they have switched as expected.

To this purpose the valves are connected with **Output 1a** to **Output 2b**. The feedback signals are connected to the **Feedback 1** and **Feedback 2** inputs. The **Control 1** and **Control 2** inputs are connected to the logic signal that represents the desired state for the valve, e.g. the **Enable** output of a Reset function block. Depending on the valve type, some of the signals are not used.

Three different valve types are available: Single valves, double valves and directional valves.

Parameters of the function block

Table 70: Parameters of the Valve monitoring function block

Parameter	Possible values
Reset condition	• Manual reset • Auto reset
Continuous monitoring when valve is active	• No • Yes
Valve mode	• Single (Control 1, Output 1a, Output 1b, Feedback 1 activated) • Double (Control 1, Output 1a, Output 1b, Feedback 1, Output 2a, Output 2b, Feedback 2 activated) • Directional (Control 1, Output 1a, Output 1b, Feedback 1, Control 2, Output 2a, Output 2b, Feedback 2, Directional error activated)
Max. switch-on feedback delay time	50 ms to 10 s in steps of 10 ms (0 = disabled, only with CPU firmware V2.00.0 or higher). If this parameter is disabled, then the option Continuous monitoring when valve is active has to be deactivated as well. If this parameter is enabled, the value has to be greater than the logic execution time.
Max. switch-off feedback delay time	50 ms to 10 s in steps of 10 ms (0 = disabled, only with CPU firmware V2.00.0 or higher). If enabled, the value has to be greater than the logic execution time.
Min. reset pulse time	• 100 ms • 350 ms
Use fault present	• With • Without

ATTENTION

Connect the feedback signals correctly!

The signals for **Feedback 1** and **Feedback 2** have to be protected against short-circuits to the signals for outputs (e.g. **Output 1a**, **1b**, **2a** and **2b**) as well as against each other (e.g. by means of protected wiring or wiring of these signals solely within the control cabinet).

Output 1a to Output 2b

Both outputs of a pair (**Output 1a** and **Output 1b** or **Output 2a** and **Output 2b**) have always the same value. This way, two outputs per valve are available to connect two output elements directly.

Output 1a/1b or **Output 2a/2b** become High, if the related **Feedback 1** or **Feedback 2** input is High and the related **Control** input changes from Low to High subsequently.

Output 1a/1b or **Output 2a/2b** become Low, if the related **Control** input is Low or if a fault is present (**Feedback error** output is High or **Directional error** output is High).

The related control input for **Output 1a/1b** is always **Control 1**.

The related control input for **Output 2a/2b** depends on the configured valve type:

- For Double valve: **Control 1**
- For Directional valve: **Control 2**

Feedback error, Directional error and Fault present

Generally it is expected that the **Feedback 1/2** input always takes the inverted value of the related **Control** input before the configured Max. switch-on feedback delay (T_{ON}) or Max. switch-off feedback delay (T_{OFF}) has expired.

The **Feedback error** output becomes High, if …

- the **Control** input changes from Low to High and the related **Feedback** input is Low (irrespective of T_{ON} and T_{OFF}),

  Or

- T_{ON} is greater than zero and the **Control** input changes from Low to High and the related **Feedback** input does not change from High to Low before T_{ON} has expired,

  Or

- T_{OFF} is greater than zero and the **Control** input changes from High to Low and the related **Feedback** input does not change from Low to High before T_{OFF} has expired,

  Or

- Continuous monitoring when valve is active is active and the **Control** input is High and the related **Feedback** input changes to High.

The **Directional error** output becomes High, if the Valve type parameter is = Directional and the **Control 1** and **Control 2** inputs are High at the same time.

The **Fault present** output becomes High, if **Feedback error** and/or **Directional error** is High.

The **Feedback error**, **Directional error** and **Fault present** outputs become Low, if all activated Control inputs are Low and all activated Feedback inputs are High. If the Reset condition is configured as Manual reset, a valid reset pulse must be applied at the **Reset** input additionally.

The **Min. reset pulse time** defines the minimum required duration of the pulse at the **Reset** input. Valid values are 100 ms and 350 ms. If the pulse duration is shorter than the configured minimum pulse time or longer than 30 s, the pulse is ignored.



ATTENTION

Ensure that the transitions of the signals for resetting fulfill the requirements of the safety standards and regulations!

In case of a short-circuit to High (to 24 V DC) at a physical input, the evaluated signal can have a pulse when the signal is reset due to the short-circuit detection. If such a pulse can result in a dangerous state in the machine, the following points have to be observed:

- Ensure protected cable laying for the signal line (due to cross-circuiting to other signal lines).
- No short-circuit detection, i.e. do not reference to test outputs.

Sequence/timing diagrams

Figure 149:
Sequence/timing diagram for single valve in manual reset mode

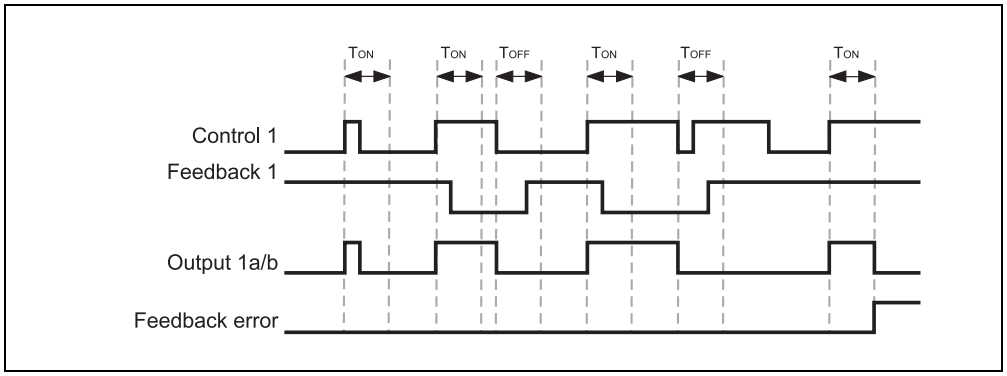

Figure 150:
Sequence/timing diagram for double valve in manual reset mode

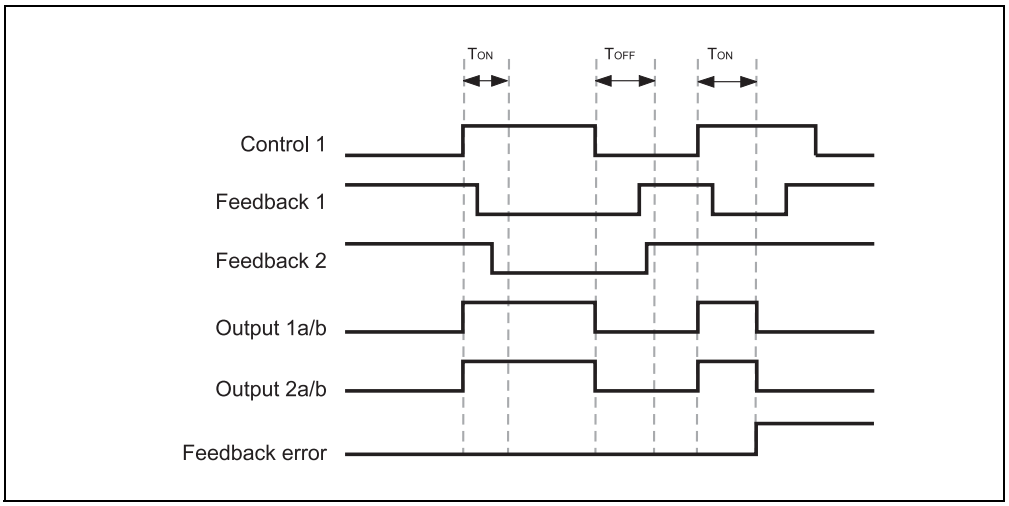

Figure 151:
Sequence/timing diagram for directional valve

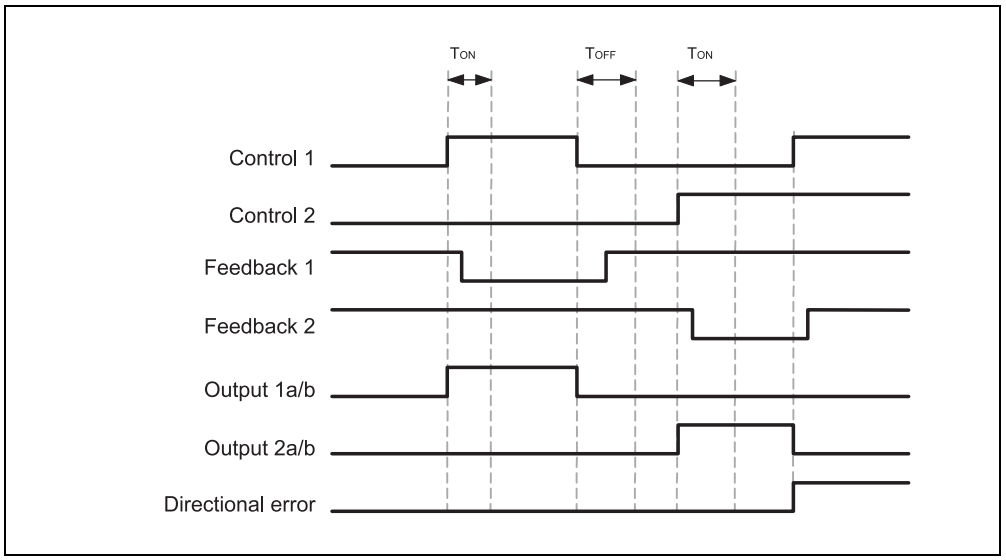

9.8.9 User mode switch

Function block diagram

Figure 152:
Function block diagram for the User mode switch function block

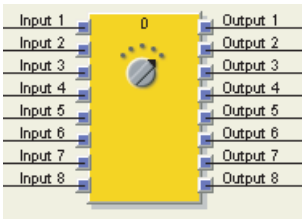

General description

The User mode switch function block selects an output depending on an input value. Output x is High if Input x is High.

The function block supports 2 to 8 inputs and the corresponding outputs.

Only one input may be High at any time (1 out of n). If no input or more than one input is High, the output that was High last is kept High for the configured discrepancy time. After expiration of the discrepancy time, the **Fault present** output changes to High and all outputs change to the value defined in the error output combination.

If in the first logic cycle after the transition from the Stop state to the Run state there is no valid input combination, the configured error output combination is applied to the outputs and the **Fault present** output changes to High immediately.

Parameters of the function block

Table 71:
Parameters of the User mode switch function block

Parameter	Possible values
Discrepancy time	0 to 10 seconds in steps of 10 ms
Error output combination	Checked outputs will be High and not checked outputs will be Low when Fault present is High.
Number of inputs or Number of outputs	2 to 8
Use fault present	• With • Without

Truth table for the User mode switch function block

The truth table uses the following designations:

“0” means logic Low.

“1” means logic High.

Table 72: Truth table for the User mode switch function block

Inputs								Outputs							
1	**2**	**3**	**4**	**5**	**6**	**7**	**8**	**Fault present**	**1**	**2**	**3**	**4**	**5**	**6**	**7**	**8**
1	0	0	0	0	0	0	0	0	1	0	0	0	0	0	0	0
0	1	0	0	0	0	0	0	0	0	1	0	0	0	0	0	0
0	0	1	0	0	0	0	0	0	0	0	1	0	0	0	0	0
0	0	0	1	0	0	0	0	0	0	0	0	1	0	0	0	0
0	0	0	0	1	0	0	0	0	0	0	0	0	1	0	0	0
0	0	0	0	0	1	0	0	0	0	0	0	0	0	1	0	0
0	0	0	0	0	0	1	0	0	0	0	0	0	0	0	1	0
0	0	0	0	0	0	0	1	0	0	0	0	0	0	0	0	1
More than one input High or no input High for shorter than the set discrepancy time								0	= Last output combination							
More than one input High or no input High for equal or longer than the set discrepancy time								1	= Error output combination							

Sequence/timing diagram

Figure 153: Sequence/timing diagram for the User mode switch function block

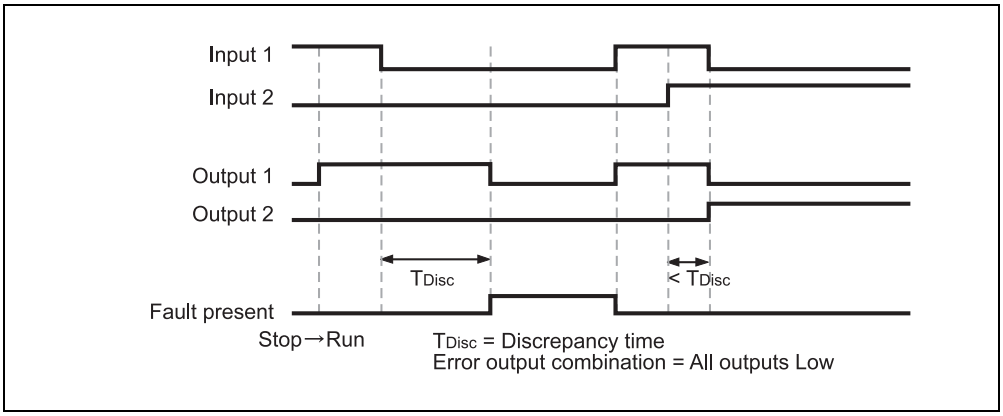

Note

- If the inputs of the function block are connected to inputs of an safety I/O module which are connected to test outputs, and the faulty input combination is the result of a test pulse error (stuck-at-high) which leads to a Low input value, the test pulse error needs to be reset first, e.g. by briefly interrupting the corresponding input line or test output line.
- If the inputs of the function block are connected to inputs of an safety I/O module which are connected to test outputs, then a cross circuit between the used inputs is detected only if a user mode is selected that activates one of these inputs.

9.8.10 Switch synchronization

Function block diagram

Figure 154: Function block diagram for the Switch synchronization function block

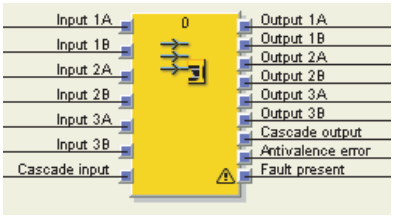

General description

The Switch synchronization function block was designed to improve the integration of SICK safety scanners (e.g. S3000). It monitors the input signals for changes. If a change of any input signal has been detected, the function block “freezes” the values of its outputs until the configurable **Hold time for outputs** has expired.

Parameters of the function block

Table 73: Parameters of the Switch synchronization function block

Parameter	Possible values
Cascade input	• With • Without
Antivalence check	• With • Without If this function is active, the optional Antivalence error output can be used.
Hold time for outputs	10 ms to 10 s in steps of 10 ms. The value has to be greater than the logic execution time.
Invert input 1A … Invert input 3B	Each input of this function block can be inverted (see Section 9.5.2).
Number of inputs or Number of outputs	1 to 6
Use fault present	• With • Without

Note An inverted input will invert the corresponding output signal as well. E.g. if input 1A is High, but configured as inverted, it will be evaluated as Low and output 1A will be set to Low.

Hold time for outputs

The **Hold time for outputs** defines the time delay between the first change of any input signal and the latching of the input signals, i.e. the reaction of the outputs. This can be used to compensate delays e.g. between the different contacts of mechanical switches.

Non cascading mode – without cascade input

If the Switch synchronization function block is configured without the **Cascade** input, it supports the evaluation of up to three input pairs. A change of any input signal starts the timer. The outputs 1A to 3B keep their values during the configured **Hold time for outputs**. When the timer has elapsed, the values of the inputs 1A to 3B at this point of time are applied to output 1A to 3B, irrespective of the result of the antivalence check. The outputs keep these values until the next synchronization process occurs.

Cascading mode – with cascade input

Several Switch synchronization function blocks can be combined to a cascade so that all outputs will be switched at precisely the same time.

By cascading multiple Switch synchronization function blocks it is possible to synchronize more than six inputs. If the function block is configured with **Cascade** input, the **Cascade** output is present additionally.

Note All cascaded function blocks must be configured with the same **Hold time for outputs**.

Figure 155:
Logic example for two cascaded Switch synchronization function blocks

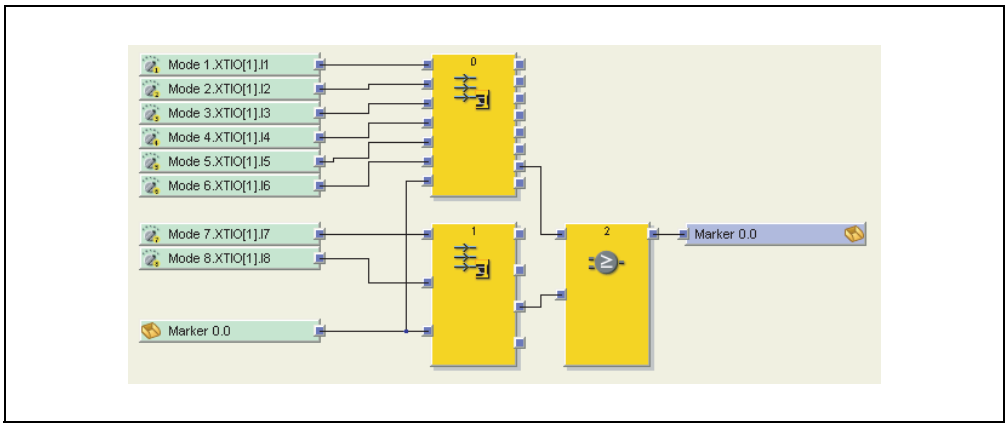

All **Cascade output** signals must be connected back to the **Cascade inputs** of all used Switch synchronization function blocks via an OR function block and a CPU marker (see also Figure 155).

Notes

- Do not use a jump address for the back routing of the cascade signal but a CPU marker. This ensures that all related Switch synchronization function blocks will process the signal at the same logic cycle.
- The timer is increased by the necessary value to compensate the delay resulting from the connection of the **Cascade input** via the CPU marker.

A rising edge on the **Cascade input** starts the timer (timer start value is the system time from the last logic execution cycle). When the timer has elapsed, the values of the inputs 1A to 3B at this point of time are applied to output 1A to 3B, irrespective of the result of the antivalence check. The outputs keep these values until the next synchronization process occurs.

Antivalence check

If this function is enabled, an antivalence check is performed every time when the **Hold time for outputs** has elapsed (i.e. every time when the outputs take the current input values). If any of the used input pairs **Input 1A/Input 1B** to **Input 3A/Input 3B** does not have antivalent values (i.e. one input of each pair must be Low and the other input must be High), then the **Antivalence error** output changes to High. It becomes Low again when another synchronization process has been finished without an antivalence error. The behaviour of the outputs 1A to 3B however is independent of the result of the antivalence check.

Note In order to obtain a defined output value combination in case of an antivalence error, the Error output combination function block can be used (see Chapter 9.8.11).

Behaviour on startup

On transition from the Stop state to the Run state, the outputs will be set immediately according to the input values and the antivalence check will be executed, if configured. In this case the function block does not wait for the **Hold time for outputs** to expire.

Sequence/timing diagrams

Figure 156: Sequence/timing diagram for the Switch synchronization function block without cascading

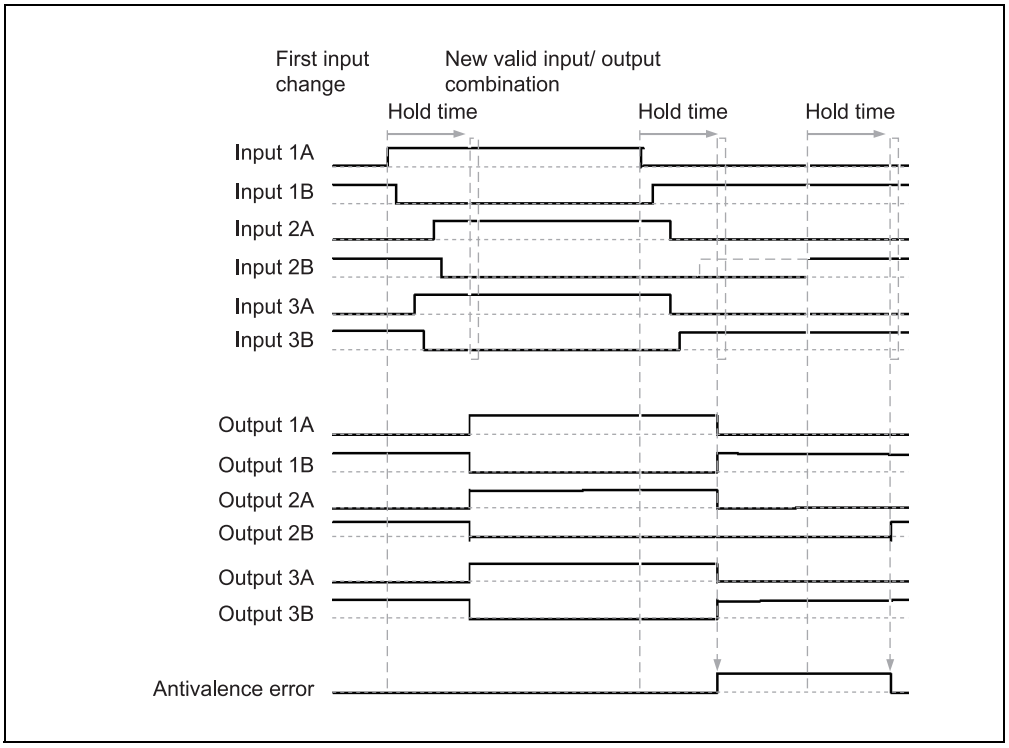

Figure 157: Sequence/timing diagram for the Switch synchronization function block with cascading

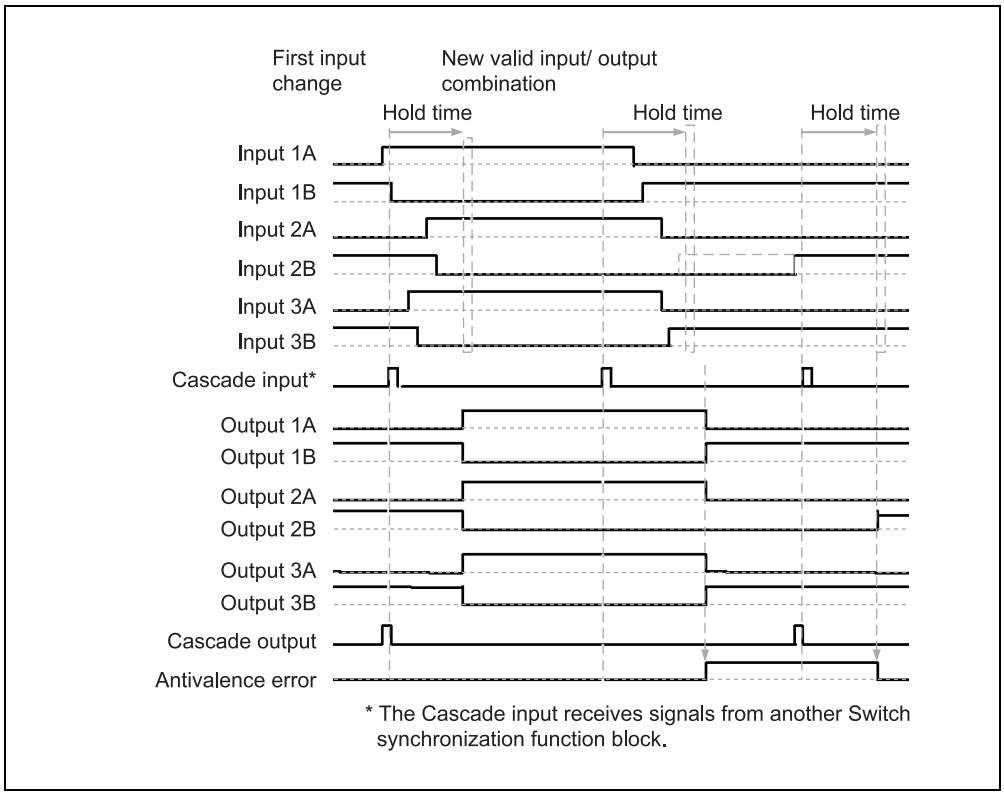

9.8.11 Error output combination

Function block diagram

Figure 158:
Function block diagram for the Error output combination function block

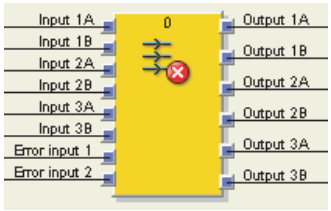

General description

The Error output combination function block was designed to improve the integration of SICK safety scanners (e.g. S3000). It can be used to set the outputs to predefined values under certain conditions, e.g. in order to output a dedicated error output combination in case of an antivalence error of the Switch synchronization function block.

Parameters of the function block

Table 74:
Parameters of the Error output combination function block

Parameter	Possible values
Number of error inputs	• 1 error input • 2 error inputs
Number of inputs or Number of outputs	1 to 6
Error output combination	For each output individually: • High • Low

Figure 159:
Logic example for the Error output combination function block

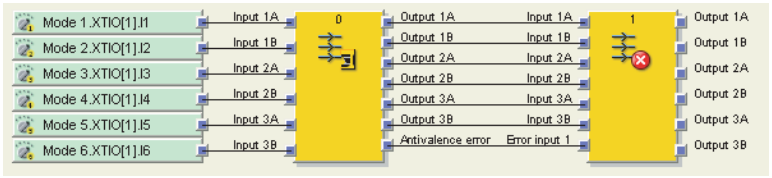

Truth table

The following applies for the truth table in this section:

“0” means logic Low.

“1” means logic High.

“x” means “any” = “0” or “1”.

Table 75:
Truth table for Error output combination

Error input 1	Error input 2	Output 1A	Output 1B	Output 2A	Output 2B	Output 3A	Output 3B
1	x	Error output combination					
x	1	Error output combination					
0	0	Input 1A	Input 1B	Input 2A	Input 2B	Input 3A	Input 3B

9.8.12 Ramp down detection

Function block diagram

Figure 160:
Function block diagram for the Ramp down detection function block

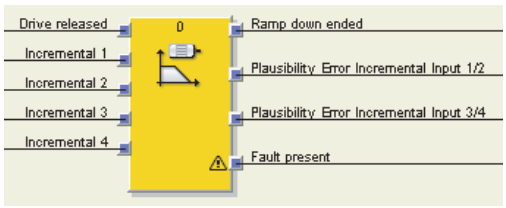

General description

The Ramp down detection function block checks whether a connected drive has been stopped, meaning that for a configurable time no pulses have been detected from the encoder system (e.g. from a HTL encoder or proximity switches). Depending on the result of this check e.g. a safety door lock can be unlatched.

The ramp down detection is started by a falling edge of the **Drive released** input signal. A stop of the drive is detected when no signal change (falling or rising edge) at any **Incremental** input has occurred for at least the configured **Min. time between signal changes**. In this case the **Ramp down ended** output will change to High. If the **Drive released** input signal becomes High, this will immediately set the **Ramp down ended** output to Low and will also cancel a currently running ramp down detection.

During the running state (i.e. while the **Drive released** input is High) and during the stop detected state (**Ramp down ended** output is High) the **Incremental** inputs are not monitored for signal changes (see Figure 165).

The function block allows an optional plausibility check of the **Incremental** inputs to detect cable interruptions, provided that the encoder provides appropriate signals, e.g. complementary outputs or proximity switches and a tooth-wheel with 270° tooth width and 180° phase shift. If the plausibility check is enabled, at least one signal within a signal pair must be High at any time. The **Plausibility error incremental** output is set to High, if this condition is not fulfilled for two consecutive logic cycles. This means that both inputs of a pair may be Low for the duration of the logic execution time without causing an error (see also Figure 166).

The **Plausibility error incremental** output is reset to Low if at least one signal within a signal pair is High and the **Drive released** input is Low.

The **Fault present** output is set to High if any **Plausibility error incremental** output is High. The **Fault present** output is set to Low, if all error outputs are Low.

Parameters of the function block

Table 76: Parameters of the Ramp down detection function block

Parameter	Possible values
Number of incremental inputs	• 1 single encoder input • 1 pair of encoder inputs • 2 pairs of encoder inputs
Input plausibility checks	• Disabled • Enabled If enabled, then the number of **incremental** inputs must be either 1 pair or 2 pairs.
Min. time between signal changes	100 ms to 10 s in steps of 10 ms. The value has to be greater than the logic execution time.
Use fault present	• With • Without

ATTENTION

Ensure that your application fulfils the following requirements!

- Encoder pulses must have a minimum duration of the logic execution time (see step 1 below).
- Connect the signal that controls the physical output for the drive to the **Drive released** input. It must be ensured that if this input is Low, the torque of the drive is switched off in any case.
- Encoders must be connected locally to a WS0-XTIO or WS0-XTDI module on the same Flexi Link station (not via network or Flexi Link etc.)

Configuration steps

- Check the minimum duration of the encoder pulses (see step 1 below).
- Determine the time between signal changes for the speed limit (see step 2 below).

Step 1: Check the maximum signal frequency for incremental signals

The encoder pulses t_{high} and t_{low} must both have a minimum duration of the logic execution time. This limits the allowed signal frequency and encoder speed depending on the encoder type. The following figures show typical signal patterns for different encoder types:

Figure 161: Signal pattern for A/B 90° phase shift encoders

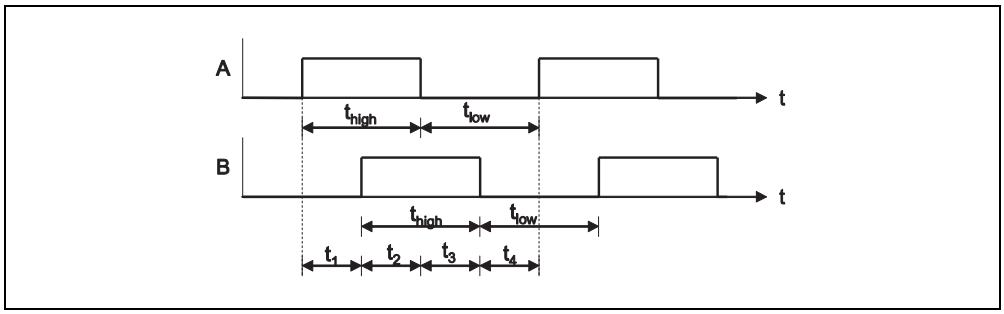

Figure 162: Signal pattern for 1/3 gap 180° phase shift encoders

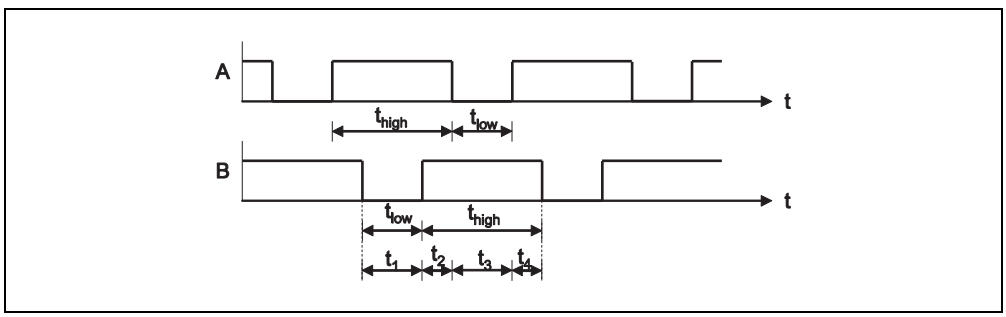

Figure 163:
Signal pattern for zero pulse encoders

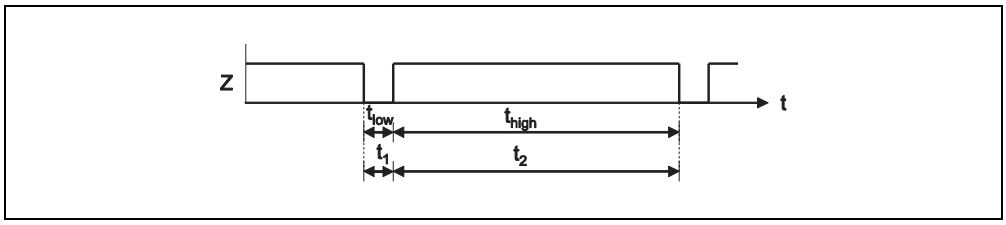

It must be ensured by the design of your system that the minimum duration of the encoder pulses t_{high} and t_{low} must both be always higher than the logic execution time. Take all possible tolerances into account, e.g. switching tolerances, tooth wheel tolerances etc. The following table shows typical values for different encoder types.

Encoder type	Max. allowed encoder signal frequency (Hz) for logic execution time									
	4 ms	8 ms	12 ms	16 ms	20 ms	24 ms	28 ms	32 ms	36 ms	40 ms
A/B, 90° phase shift	125.0	62.5	41.7	31.3	25.0	20.8	17.9	15.6	13.9	12.5
1/3 gap*1	83.3	41.7	27.8	20.8	16.7	13.9	11.9	10.4	9.3	8.3
1/4 gap*1	62.5	31.3	20.8	15.6	12.5	10.4	8.9	7.8	6.9	6.3
Pulse 180°	125.0	62.5	41.7	31.3	25.0	20.8	17.9	15.6	13.9	12.5

Table 77:
Maximum allowed encoder signal frequency and speed (rpm) depending on the encoder type and the logic execution time

*1 180° phase shift, 1 signal min. always High.

Step 2: Determine the time between signal changes for the speed limit

- Define the speed at which the **Ramp down ended** output shall be activated, e.g. to unlock a safety door.
- Define the maximum time that can pass between two signal changes at this speed (highest values of t_1 to t_4). Take all possible tolerances into account, e.g. switching tolerances, tooth wheel tolerances etc.

  Min. time between signal changes = highest values of t1 to t4 + 10 ms

In any case the **Min. time between signal changes** must be greater than the logic execution time and must be rounded up to a multiple of 10 ms.

ATTENTION

Take increased logic execution times into account!

Every time the logic program is changed, the logic execution time may increase. In this case it may be necessary to check the maximum signal frequency for incremental signals again. Otherwise the operator of the machine will be in danger.

Example 1: A/B 90° phase shift

- 4 teeth per revolution
- Switching tolerances +/–5° → teeth 175° to 185° (corresponds to t_{low}, t_{high}); signal change 85° to 95° (corresponds to t_1 to t_4)
- Maximum shaft speed = 750 rpm = 12.5 Hz
- Shaft speed for release = 15 rpm = 0.25 Hz
- Logic execution time = 8 ms
- Check the maximum signal frequency for incremental signals:

  Max. signal frequency = 12.5 Hz × 4 teeth/revolution = 50 Hz

  Smallest t_{low} = 1/50 Hz × 175°/360° = 9.7 ms

  → greater than the logic execution time ✓

  Smallest t_{high} = 1/50 Hz × 175°/360° = 9.7 ms

  → greater than the logic execution time ✓

➢ Determine the time between signal changes for the speed limit:

Signal frequency for release = 0.25 Hz × 4 teeth/revolution = 1 Hz

Max. input pattern period = 1/1 Hz × 185°/360° = 514 ms

Time between signal changes = 514 ms + 10 ms = 524 ms

➔ Min. time between signal changes = 530 ms (rounded up to multiples of 10 ms)

Example 2: 1/3 gap 180° phase shift

- 8 teeth per revolution
- Switching tolerances +/–2° ➔ teeth 118° to 122° (corresponds to t_{low}, t_{high}); signal change 118° to 122° (corresponds to $t_1$to t_4)
- Maximum shaft speed = 120 rpm = 2 Hz
- Shaft speed for release = 12 rpm = 0.2 Hz
- Logic execution time = 16 ms

➢ Check the maximum signal frequency for incremental signals:

Max. signal frequency = 2 Hz × 8 teeth/revolution = 16 Hz

Smallest t_{low} = 1/16 Hz × 118°/360° = 20.5 ms

➔ greater than the logic execution time ✓

Smallest t_{high} = 1/16 Hz × 238°/360° = 41.3 ms

➔ greater than the logic execution time ✓

➢ Determine the time between signal changes for the speed limit:

Signal frequency for release = 0.2 Hz × 8 teeth/revolution = 1.6 Hz

Max. input pattern period = 1/1.6 Hz × 122°/360° = 212 ms

Time between signal changes = 212 ms + 10 ms = 222 ms

➔ Min. time between signal changes = 230 ms (rounded up to multiples of 10 ms)

Example 3: Zero pulse 10°

- 1 tooth per revolution
- Switching tolerances +/–1° ➔ teeth 9° to 11° (corresponds to t_{low}, t_{high}); signal change 349° to 351° (corresponds to t_1 to t_4)
- Maximum shaft speed = 300 rpm = 5 Hz
- Shaft speed for release = 3 rpm = 0.05 Hz
- Logic execution time = 4 ms

➢ Check the maximum signal frequency for incremental signals:

Max. signal frequency = 5 Hz × 1 tooth/revolution = 5 Hz

Smallest t_{low} = 1/5 Hz × 9°/360° = 5 ms

➔ greater than the logic execution time ✓

Smallest t_{high} = 1/5 Hz × 351°/360° = 195 ms

➔ greater than the logic execution time ✓

➢ Determine the time between signal changes for the speed limit:

Signal frequency for release = 0.05 Hz × 1 tooth/revolution = 0.05 Hz

Max. input pattern period = 1/0.05 Hz × 11°/360° = 611 ms

Time between signal changes = 611 ms + 10 ms = 621 ms

➔ Min. time between signal changes = 630 ms (rounded up to multiples of 10 ms)

Logic example

Figure 164:
Logic example for the Ramp down detection function block

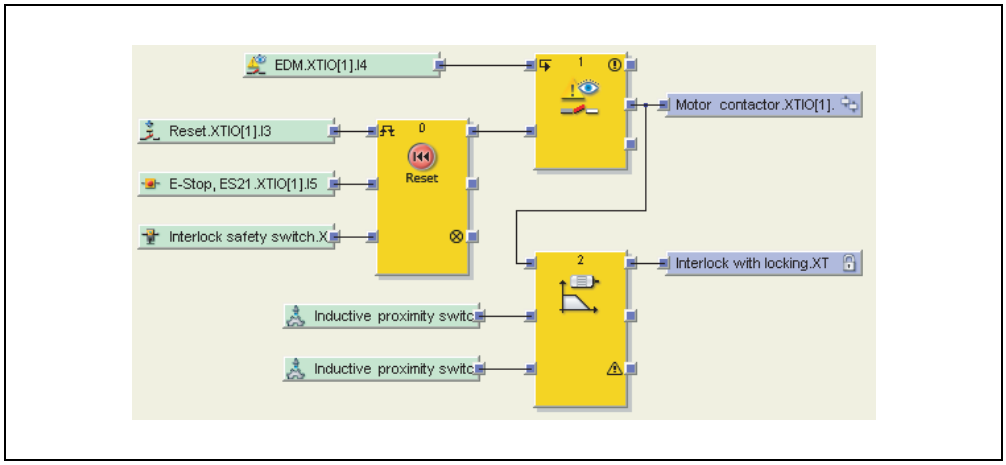

Sequence/timing diagrams

Figure 165:
Sequence/timing diagram for the Ramp down detection function block

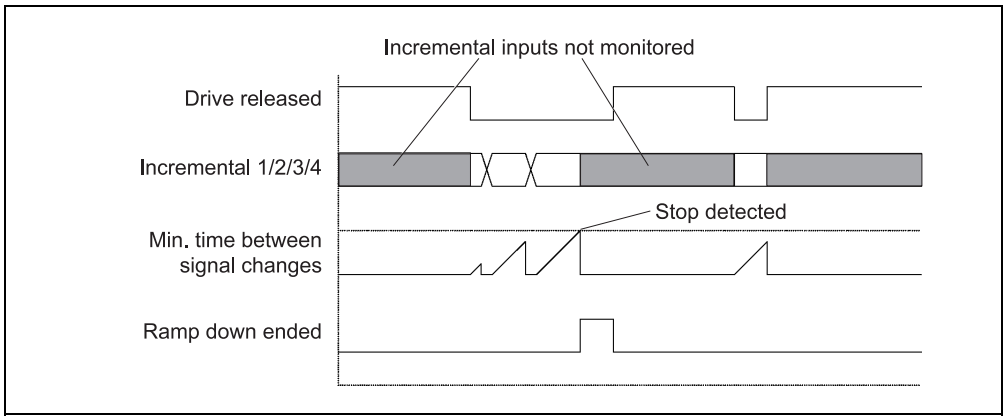

Figure 166:
Sequence/timing diagram for the Ramp down detection function block with plausibility check

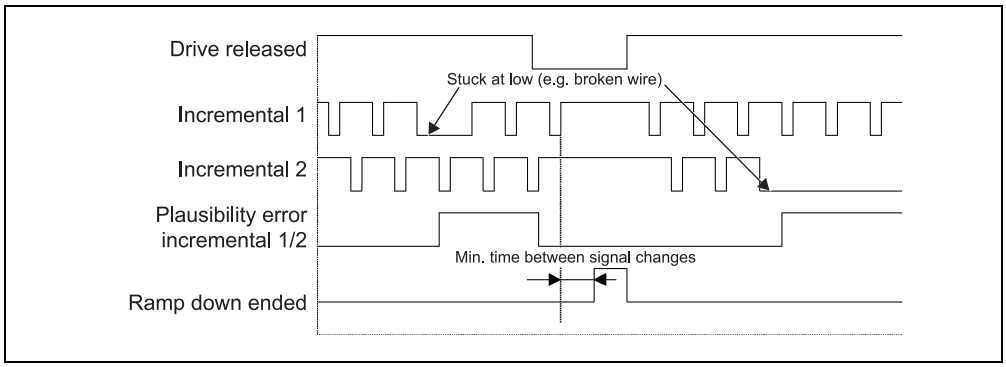

9.8.13 Frequency monitor

Function block diagram

Figure 167:
Logic connections for the frequency monitor function block

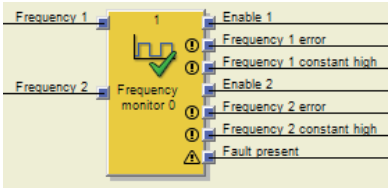

General description

Using the frequency monitor function block the frequency or the period duration of up to two signals can be monitored separately. Optionally it is also possible to monitor the pulse duration (thigh). This feature can be used, for instance, to evaluate signal sources that output a pulsed signal at a specific frequency as an enable signal.

Function block parameters

Table 78:
Parameters for the frequency monitor function block

Parameters	Possible values, each for frequency 1 and frequency 2
Min. period duration	20 ms to 2.54 s in 10 ms increments. The value must be greater than the logic execution time.
Max. period duration	30 ms to 2.55 s in 10 ms increments. The value must be greater than the min. period duration + the logic execution time.
Average value of the pulse duration (t_{high})	0 = inactive, 10 ms to 2.53 s in 10 ms increments. With 0 = inactive the pulse duration is not evaluated. The pulse duration is then always valid for the evaluation. If the value is not 0, it must meet the following conditions: • > 2 x Logic execution time **and** • < (Min. period duration – Tolerance of the pulse duration)
Tolerance of the pulse duration (t_{high})	10 ms to 310 ms in 10 ms increments. The value must be greater than the logic execution time.
Error message if period duration too short	• With • Without
Use Fault present	• With • Without This parameter applies to the function block and therefore to both Frequency 1 and Frequency 2.

ATTENTION

Pay attention to the accuracy of the monitoring!

The minimum duration for the pulse duration t_{high} and the minimum duration of the space between pulses t_{low} on the pulse generator signals must be greater than the logic execution time. Otherwise there is a risk that an increased frequency (shorter period duration) will not be detected, because all signal changes are not measured.

Limits for reliably valid signal

The limits for the average period duration that a signal must meet to be evaluated as a valid signal are tighter than the limits selected with the parameters. The effective tighter limits are always the next multiple of the logic execution time. The average period duration means here that although the individual periods of the signal may have outliers (jitter), these outliers must be compensated over several periods.

Limits for reliably invalid signal

The limit for the average period duration that a signal must exceed to be evaluated as an invalid signal corresponds to the tolerance for the related parameters. On this subject see chapter 9.6.

Essentially, this means that a static low or high is detected as an invalid signal at the latest after max. period duration + logic execution time + 10 ms. The response time of the signal path used is increased by this amount.

If the average period duration of the signal is greater than the limit for a reliably valid signal, but lower than the limit for an reliably invalid signal, then it can take several periods until the deviation has accumulated adequately such that an invalid signal is then evaluated:

Number of periods = (logic execution time + 10 ms) / (real averaged period duration– effective limit for reliably valid signal).

Table 79: Examples for effective limits for the period duration

Logic execution time	Set parameters		Effective limit	
	Min. period duration	Max. period duration	Min. period duration	Max. period duration
4 ms	120 ms	160 ms	120 ms	160 ms
12 ms	120 ms	160 ms	120 ms	156 ms
32 ms	120 ms	160 ms	128 ms	160 ms

Note In the following description the “x” in the signal names signifies either 1 or 2, i.e. the index for one of the two separate monitoring functions in the function block. The function block can detect the following invalid signals:

- (1) The period duration measured is too short: The time between the rising edges or between the falling edges on the **Frequency** x input is less than **Min. period duration**. This monitoring starts with the first rising edge after the transition from the Stop state to the Run state.
- (2) The period duration measured is too long: The time between the rising edges or between the falling edges on the **Frequency** x input is greater than **Max. period duration**. This monitoring starts with the first rising edge after the transition from the Stop state to the Run state.

- (3) The pulse duration measured is too short: The pulse duration monitoring is activated (**Average value of the pulse duration** is not 0) and the time between the last rising edge and the last falling edge on the **Frequency x** input is less than **Average value of the pulse duration — Tolerance of the pulse duration**. This monitoring starts with the first rising edge after the transition from the Stop state to the Run state.
- (4) The pulse duration measured is too long: The pulse duration monitoring is activated (**Average value of the pulse duration** is not 0) and the time since the last rising edge on the **Frequency x** input is greater than **Average value of the pulse duration + Tolerance of the pulse duration**. A falling edge has therefore not been detected in the expected time. This monitoring starts with the first rising edge after the transition from the Stop state to the Run state.
- (5) Input **Frequency x** is constantly high: The **Frequency x** input has been high for longer than **Max. period duration**. This monitoring starts immediately after the transition from the Stop state to the Run state.

The **Enable x** output changes to high if two periods with a valid period duration and a valid pulse duration are detected on the **Frequency x** input. If the pulse duration monitoring is inactive, the pulse duration is always valid for the evaluation.

The **Enable x** output changes to low if an invalid signal has been measured on the **Freqency x** input, i.e. if…

- (1) the period duration measured is too short or
- (2) the period duration measured is too long or
- (3) the pulse duration measured is too short and the pulse duration monitoring is activated or
- (4) the pulse duration measured is too long and the pulse duration monitoring is activated.

Figure 168: Sequence/timing diagram for the frequency monitor function block, release activation

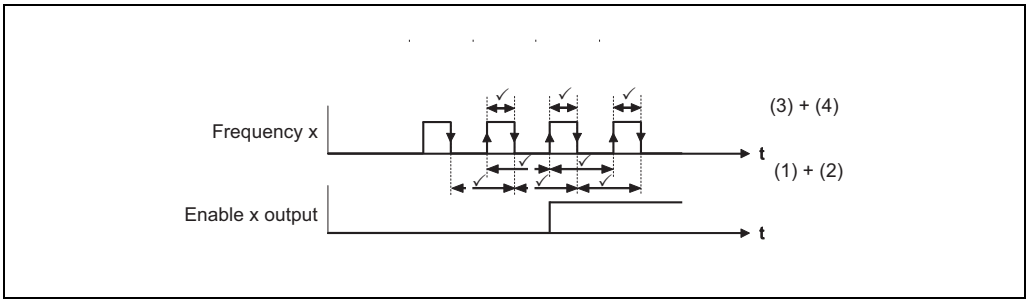

The **Frequency x error** output becomes high, if…

- (1) the period duration measured is too short and the error signal is activated (**Error signal if period duration too short = With**) or
- (2) the period duration measured is too long or
- (3) the pulse duration measured is too short and the pulse duration monitoring is activated or
- (4) the pulse duration measured is too long and the pulse duration monitoring is activated or
- (5) the **Frequency x** input is constantly high.

The **Frequency x constant high** output becomes high, if…

- (5) **the Frequency x** input is constantly high.

The **Fault** present output becomes high, if…

- the **Frequency 1** error output is high or
- the **Frequency 2** error output is high or
- the **Frequency 1** constant high output is high or
- the **Frequency 2** constant high output is high.

The **Frequency x error**, **Frequency x constant high** and **Fault present** outputs change to low again if the **Enable x** output changes to high, i.e. two periods with a valid period duration and a valid pulse duration have been detected on the **Frequency x** input.

After the transition from the Stop state to the Run state all outputs are low.

Sequence/timing diagrams

Figure 169: Sequence/timing diagram for the frequency monitor function block, period duration too long

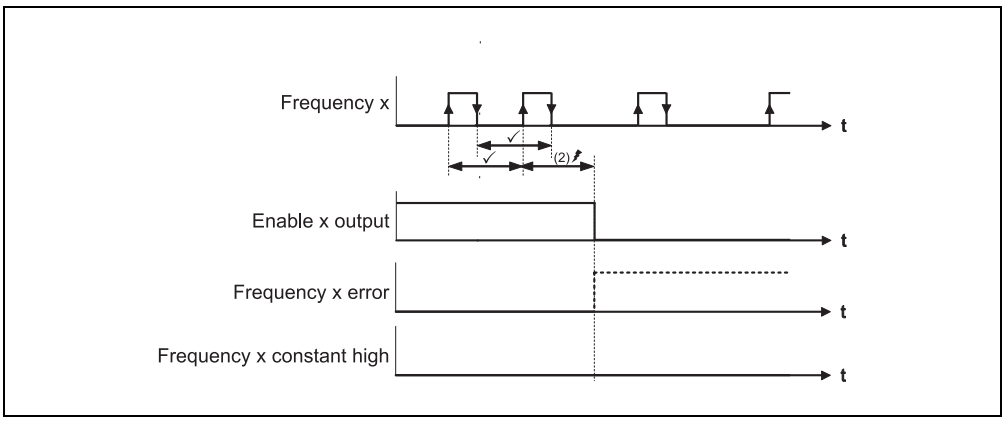

Figure 170: Sequence/timing diagram for the frequency monitor function block, period duration too short

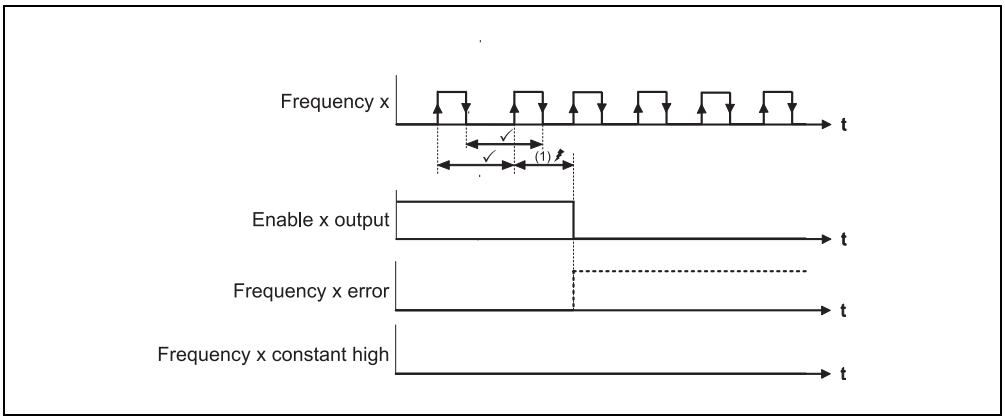

Figure 171: Sequence/timing diagram for the frequency monitor function block, frequencyx constant high

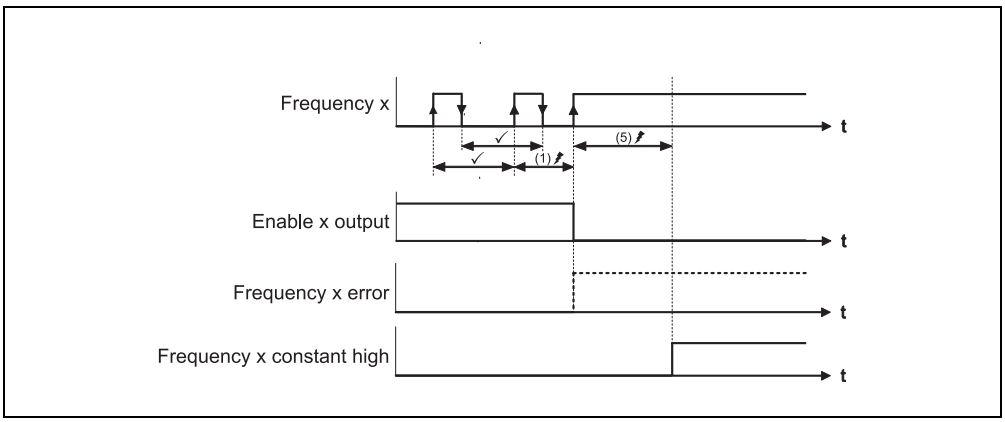

9.8.14 Start warning

Function block diagram

Figure 172:
Function block diagram for the Start warning function block

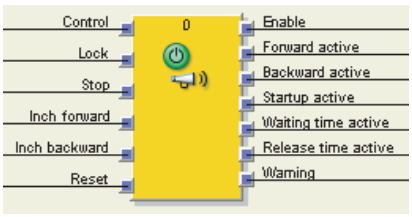

General description

Many machines must be equipped with a start warning mechanism, e.g. if the machine operator can not see all dangerous areas from one location because of the size of the machine.

After a start button has been pressed, the waiting time starts and a warning signal is initiated. After expiration of the waiting time the release time starts and a second warning signal is initiated. During the release time it is possible to start the machine by pressing the start button a second time.

Note The start warning is required for automatic run mode as well as for the safe inch mode of the machine.

Start sequence

1. On startup the function block is in Inactive mode. The **Startup active** output is High while all other outputs are Low.
2. If the **Control** input becomes Low and the **Lock** and **Stop** inputs are High, the start sequence is enabled and the function block goes into Waiting for start mode.
3. A rising edge on the **Inch forward** or on the **Inch backward** input will trigger the start sequence:
   - The **Startup active** output changes to Low, the waiting time and the signal time start and the **Waiting time active** output as well as the **Warning** output change to High for the duration of the signal time.
   - After expiration of the **Waiting time** the **Release time** and the **Impulse time** start. The **Waiting time active** output changes back to Low, the **Release time active** output changes to High and the **Warning** output changes to High again for the duration of the impulse time.
4. If during the release time a second rising edge of **Inch forward** occurs, the function block will transit to inch mode (Forward) and the **Enable** and **Forward active** outputs will change to High. Respectively, if during the release time an additional rising edge of **Inch backward** occurs, the function block will transit to inch mode (Backward), and the **Enable** and the **Backward active** outputs will change to High.

Note For restrictions to this rule that apply in forward/backward locked mode see below.

5. If the release time has expired and no transition to inch mode has occurred, the function block will transit back to Waiting for start mode and a complete start sequence is required again.
6. The duration of the inch mode is not limited. It will be stopped if the High input (**Inch forward** or **Inch backward**) becomes Low again. In this case the **Enable** output and the **Forward active** or the **Backward active** output will become Low again. The inch mode will also be stopped if both inputs (**Inch forward** and **Inch backward**) become High at the same time. After the inch mode has been stopped, the release time starts again. This means that another rising edge on the **Inch forward** or on the **Inch backward** input will restart the inch mode immediately without a new start sequence. If the release time has expired and no transition to inch mode has occurred, the function block will transit back to Waiting for start mode and a complete start sequence is required again.
7. The inch mode will also be stopped by a falling edge on the **Reset** input or on the **Stop** input. In this case, the function block will transit back to Waiting for start mode and a complete start sequence is necessary again.

Parameters of the function block

Table 80: Parameters of the Start warning function block

Parameter	Possible values
Direction switching	• Locked • Not locked
Waiting time	1000 to 60000 ms in steps of 10 ms. The value has to be greater than the logic execution time.
Release time	1000 to 600000 ms in steps of 10 ms. The value has to be greater than the logic execution time.
Signal time	0 to 60000 ms in steps of 10 ms. If the value is not 0, it has to be greater than the logic execution time, but smaller than the Waiting time.
Impulse time	0 to 600000 ms in steps of 10 ms. If the value is not 0, it has to be greater than the logic execution time, but smaller than the Release time.

Direction switching

This parameter determines if it is possible to switch between the forward and backward direction with or without execution of the complete start sequence. If the setting **Not locked** is configured it is possible to initiate the start sequence with one of the inputs (e.g. **Inch forward**) and confirm the start sequence with the other input (e.g. **Inch backward**). In **Not locked** mode, it is also possible to switch the direction of the inch mode without the execution of the complete start sequence.

The setting **Locked** means that the start sequence must be confirmed (during the release time) with the same input (**Inch forward** or **Inch backward**) that has triggered the start sequence. A rising edge on the other input will restart the **Waiting time** instead. It is also not possible to switch between directions in inch mode. If the direction shall be changed a complete start sequence must be executed (see also Figure 175).

Waiting time

The **Waiting time** parameter defines the time between the first rising edge of the **Inch forward** or **Inch backward** input and the start of the **Release time**.

Release time

After the **Waiting time** has expired, the **Release time** begins. During the **Release time** a rising edge on one of the **Inch forward**/**Inch backward** inputs will start the machine (depending on the setting of the **Direction switching** parameter).

Signal time

The **Signal time** starts at the same time as the **Waiting time**. During the **Signal time** the **Warning** output becomes High, indicating that a start sequence has been initiated.

Impulse time

The **Impulse time** starts at the same time as the **Release time**. During the impulse time the **Warning** output becomes High again, indicating that the inch mode can now be started. If during the **Impulse time** the inch mode is started this has no effect on the **Impulse time**, i.e. the **Warning** output will remain High until the configured **Impulse time** has expired.

Note The second warning signal is not mandatory and may be disabled by setting the impulse time to 0 s.

Control input

A start sequence can only be initiated if the **Control** input is Low. If the **Control** input changes to High during a start sequence, the start sequence is aborted and another start sequence can only be initiated after the **Control** input has changed to Low again.

Lock input

A start sequence can only be initiated if the **Lock** input is High. If the **Lock** input changes to Low during a start sequence, the start sequence is aborted and another start sequence can only be initiated after the **Lock** input has changed to High again. This input can be used for safety stops.

If inch mode is active, a falling edge at the **Lock** input will stop inch mode and set the function block back into Waiting for start mode.

Stop input

A start sequence can only be initiated if the **Stop** input is High. If the **Stop** input changes to Low during a start sequence, the start sequence is aborted and another start sequence can only be initiated after the **Stop** input has changed to High again. This input can be used for safety stops.

If inch mode is active, a falling edge at the **Stop** input will stop inch mode and set the function block back into Waiting for start mode.

Inch forward/Inch backward

If a rising edge (transition from Low to High) is detected on the **Inch forward** or on the **Inch backward** input while the other input remains Low, the start sequence will begin.

Note A rising edge on both inputs or a rising edge on one of these inputs while the other input is High is considered an invalid input state. If this occurs during a start sequence (waiting time or release time running), these rising edges have no effect. If this occurs during inch mode, the inch mode will be stopped and the release time starts again.

Reset

A falling edge on the **Reset** input restarts the start sequence. An active inch mode is stopped and the function block back goes into Waiting for start mode. The **Enable** output as well as the **Forward active** and the **Backward active** output will become Low while the **Startup active** output will become High.

Startup active output

The **Startup active** output is Low during the start sequence (waiting or release time is running) or if inch mode is active (the **Enable** output is High). The **Startup active** output can be used to lock other parallel Start warning function block instances. To this purpose, connect the **Startup active** output via a CPU marker to the **Lock** input of the other function block instance (see Figure 173).

Figure 173:
Logic example for a combination of two Start warning function blocks

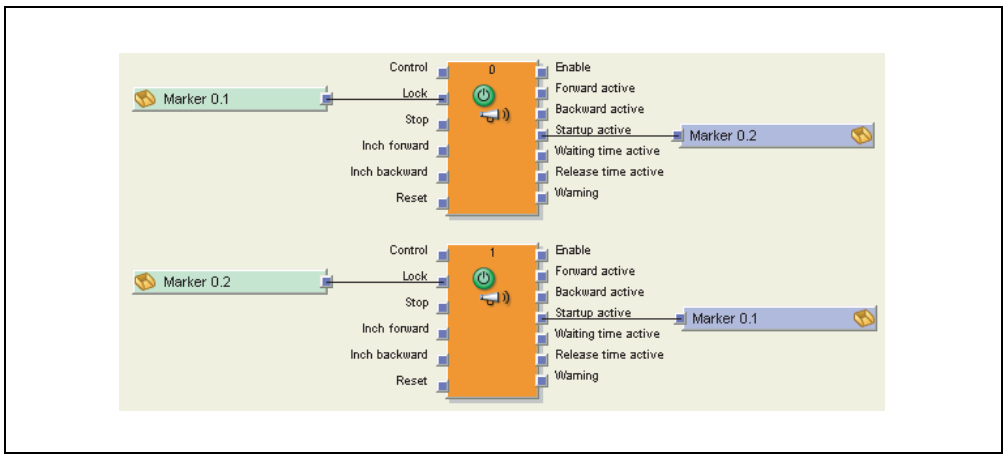

Waiting time active output and Release time active output

These outputs indicate whether the waiting time or the release time is active.

Sequence/timing diagrams

Figure 174: Sequence/timing diagram for the Start warning function block in Not locked mode

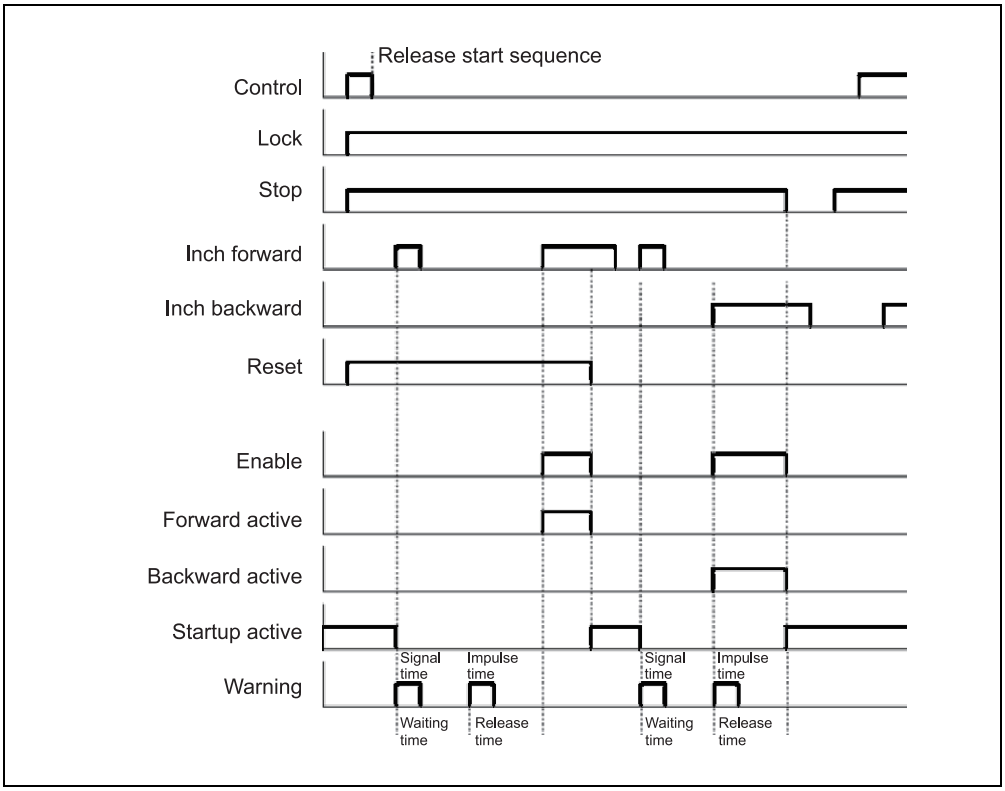

Figure 175: Sequence/timing diagram for the Start warning function block in Locked mode

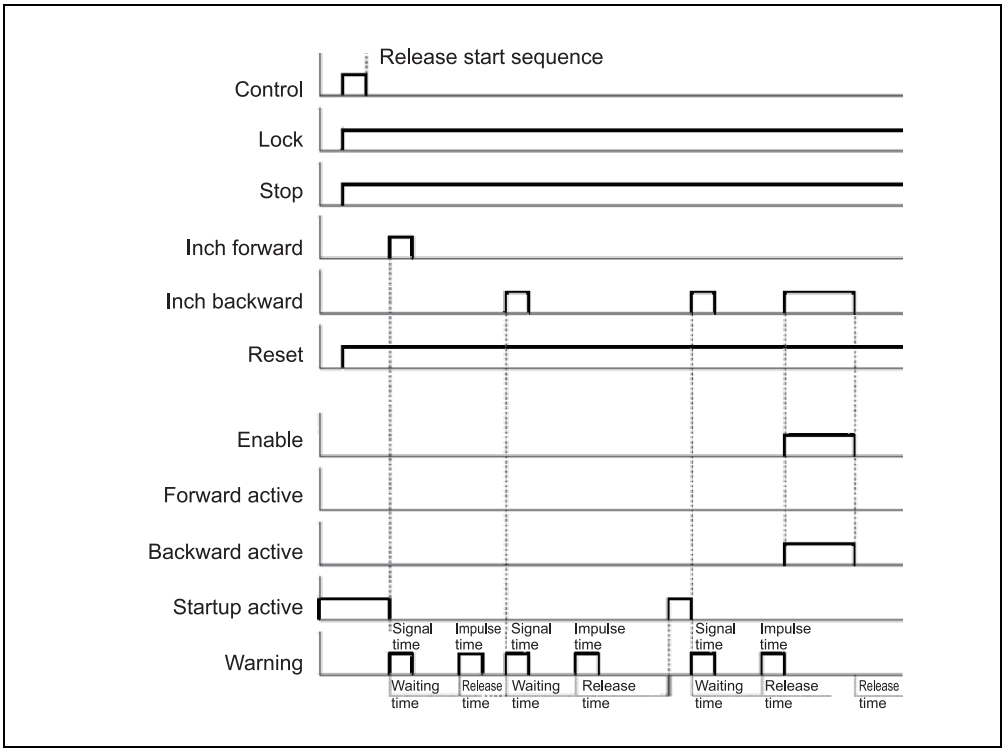

Note

- The start sequence is started by a rising edge of the **Inch forward** input.
- A rising edge at the **Inch backward** input causes a restart of the waiting time during the start sequence.
- A rising edge at the **Inch backward** input causes a stop of the inch mode if the **Inch forward** input is High.

9.9 Function blocks for dual channel evaluation

The MELSEC-WS safety controller supports applications up to SIL3 (in accordance with IEC 62061) and Performance Level (PL) e (in accordance with EN/ISO 13849-1). Possible sources for function block inputs are one or two safety signals connected locally to the MELSEC-WS safety controller. You can choose between the following input evaluations (depending on the function block):

- Single-channel
- Dual-channel:
  - Dual-channel equivalent (1 pair)
  - Dual-channel complementary (1 pair)
  - Dual-channel equivalent (2 pairs)
  - Dual-channel complementary (2 pairs)

The following truth tables summarize the internal evaluation for the individual types of input signal evaluations of the MELSEC-WS safety controller.

Truth tables

The following applies for the truth tables in this section:

“0” means logic Low.

“1” means logic High.

“x” means “any” = “0” or “1”.

Note The Fault present output is High when the logic processing of the MELSEC-WS safety controller detects an error in the combination or in the sequence of the input signals.

9.9.1 Single-channel evaluation

Figure 176:
Example for single-channel evaluation

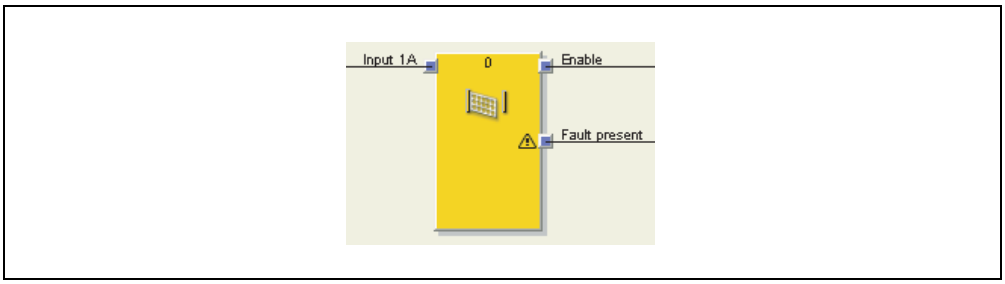

Note The following relates to the Safety gate monitoring and Emergency stop function blocks.

This evaluation type has no functional use since the **Enable** output always has the same value as **Input 1A** and the **Fault present** output is always Low. Therefore this option may be useful only for the graphic arrangement of the logic program. Regardless of that, the related input element can be used directly in the logic instead of connecting it to **Input 1A**.

9.9.2 Dual-channel evaluation (1 pair) and discrepancy time

Note This section relates to the Safety gate monitoring, Emergency stop, Light curtain monitoring, Magnetic switch, Two hand control type IIIA and Two hand control type IIIC function blocks.

It does not relate to the Tolerant dual channel monitor function block.

Note that the safety I/O modules, e.g. WS0-XTIO or WS0-XTDI, can carry out a dual-channel evaluation when predefined input elements from the Elements window (e.g. RE27, C4000, …) are connected to them. If such an input element is selected, you do not need a separate function block for dual-channel evaluation (e.g. light curtain monitoring, safety gate monitoring or magnetic switch). For detailed information on discrepancy monitoring on the safety I/O modules see Section 10.1.

Alternatively, you can connect non pre-evaluated input signals to both input channels of a function block with a dual-channel input configuration. In this case the dual-channel evaluation takes place in the function block.

The disadvantage of this alternative is that it requires one function block more in the logic which can lead to a higher logic execution time. The advantage is that a discrepancy time error is made available via the output of the function block and can be evaluated in the logic.

The following function blocks generate the same output value for a dual-channel input signal that was pre-evaluated by the I/O device.

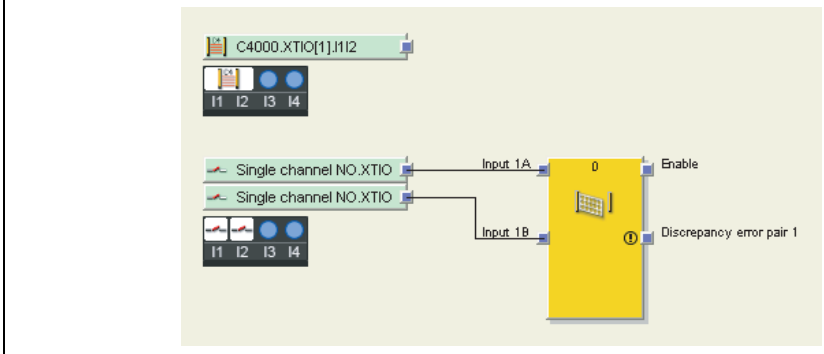

Figure 177: Dual-channel evaluation with safety I/O module or with function block

The dual-channel evaluation evaluates the correct sequence of the two input signals. It is expected that if one of the two signals has caused a switching off, the other signal will follow accordingly. Which values the two signals must have depends on the type of the dual-channel evaluation. There are two possibilities:

- equivalent evaluation
- complementary evaluation

An optional discrepancy time can be configured. The discrepancy time defines for how long the two inputs may have discrepant values after one of the both input signals has changed without this being considered as an error.

The following truth table describes the discrepancy conditions for the dual-channel equivalent and the dual-channel complementary input evaluation:

Table 81:
Dual-channel evaluation

Evaluation type	Input 1A	Input 1B	Discrepancy timer*1	Evaluation status	Enable output	Discrepancy error output
Equivalent	0	0	0	Inactive	0	Unchanged*2
	0	1	< Discrepancy time	Discrepant	0	Unchanged*2
	1	0	< Discrepancy time	Discrepant	0	Unchanged*2
	1	1	0	Active*3	1	0
	x	x	≥ Discrepancy time (timeout)	Error	0	1
Complementary	0	1	0	Inactive	0	Unchanged*2
	0	0	< Discrepancy time	Discrepant	0	Unchanged*2
	1	1	< Discrepancy time	Discrepant	0	Unchanged*2
	1	0	0	Active*3	1	0
	x	x	≥ Discrepancy time (timeout)	Error	0	1

*1 If the discrepancy time is active (> 0), the discrepancy timer is restarted on the first signal change resulting in a discrepant status. If the discrepancy time is inactive (= 0), the discrepancy timer does not start, i.e. a timeout will never occur.

*2 Unchanged = Last status is preserved.

*3 If the correct sequence has been observed.

For the change between the different states of the dual-channel evaluation the following rules apply:

A dual-channel evaluation can only change to Active (**Enable** output changes from Low to High), if …

- since the last Active status at least once the status was Inactive, i.e. it is not possible to switch from Active to Discrepant and back to Active, and
- the discrepancy time has not elapsed or the discrepancy time is deactivated, and

A discrepancy error (timeout) is reset, if the Active status has been reached, i.e. the **Enable** output changes to High.

Note When defining values for the discrepancy time the following must be observed: The discrepancy time …

- must be greater than the logic execution time,
- has a tolerance of +/- 10 ms in addition to the logic execution time. The logic execution time depends on the number and type of function blocks used and is shown in the Setting and Monitoring Tool in the logic editor on the **FB info** tab and also in the report.

- If signals from tested sensors are connected to WS0-XTDI or WS0-XTIO modules, the discrepancy time should be at least the set Test gap (ms) plus the Max. off-on delay (ms), because a signal change at the module input can be delayed for this time. Both values are displayed in the Setting and Monitoring Tool report for the used test output.
- If both inputs of a pair are connected to the same input signal, the evaluation corresponds to the single-channel evaluation, i.e. no equivalence check or antivalence check and no discrepancy time monitoring is carried out.

Sequence/timing diagram

Figure 178: Sequence/timing diagram for the Emergency stop function block

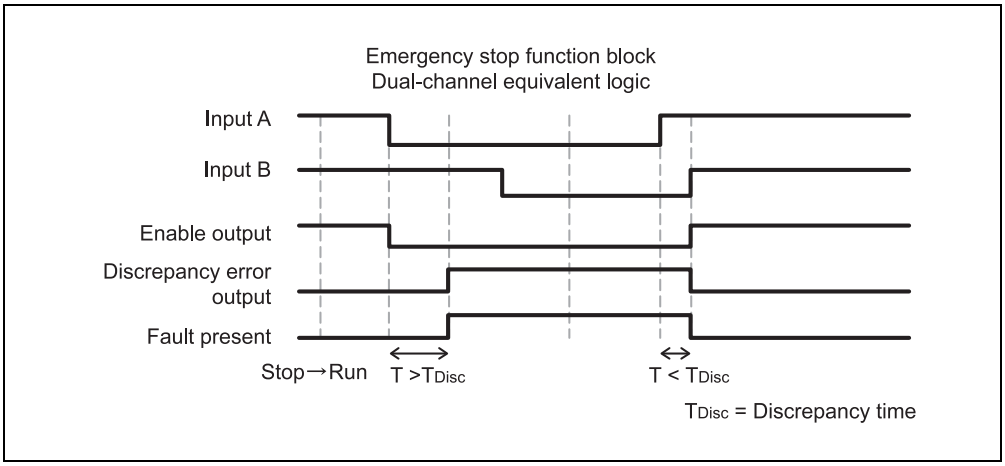

9.9.3 Double dual-channel evaluation (2 pair synchronization evaluation) and synchronization time

Note This section relates to the Safety gate monitoring and Two hand control type IIIC function blocks.

Figure 179: Double dual-channel evaluation with the Safety gate monitoring function block

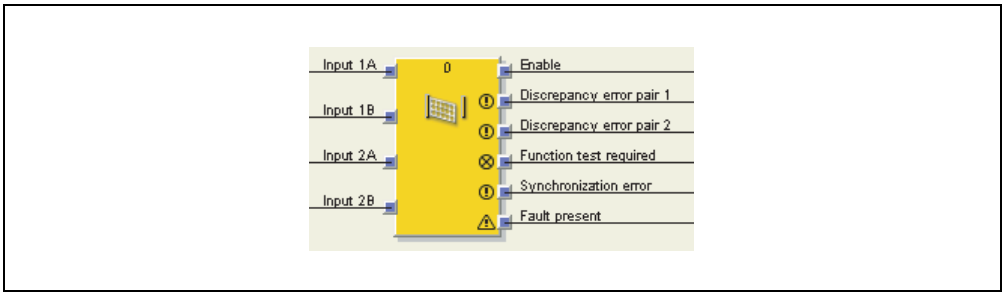

The double dual-channel evaluation (synchronization evaluation) evaluates the correct sequence of the two input signals for each of the two input pairs as described in Section 9.9.2. Additionally the correct sequence of the two dual-channel evaluations in relation to each other is monitored. It is expected that if one of the two dual-channel evaluations has caused a switching off, the other dual-channel evaluation will follow accordingly.

An optional synchronization time can be defined. The synchronization time defines for how long the two dual-channel evaluations may have not synchronous states without this being considered as an error.

The synchronization time differs from the discrepancy time: It evaluates the relation between the two dual-channel evaluations while the discrepancy time applies to an input pair of one dual-channel evaluation.

The following truth table describes the synchronization conditions for double dual-channel evaluations (2 pairs):

Table 82: Double dual-channel evaluation (synchronization evaluation)

Status of the dual-channel evaluation pair 1	Status of the dual-channel evaluation pair 1	Synchronization timer*1	Synchronization status	Enable output	Synchronization error output
Inactive or discrepant	Inactive or discrepant	0	Inactive	0	Unchanged*2
Inactive or discrepant	Active	< Synchronization time	Discrepant	0	Unchanged
Active	Inactive or discrepant	< Synchronization time	Discrepant	0	Unchanged
Active	Active	0	Active*3	1	0
x	x	≥ Synchronization time (timeout)	Error	0	1

*1 If the discrepancy time is active (> 0), the discrepancy timer is restarted on the first signal change resulting in a discrepant status. If the discrepancy time is inactive (= 0), the discrepancy timer does not start, i.e. a timeout will never occur.

*2 Unchanged = Last status is preserved.

*3 If the correct sequence has been observed.

For the change between the different states of the double dual-channel evaluation (synchronization evaluation) the following rules apply:

The synchronization evaluation can only change to Active (**Enable** output changes from Low to High), if …

- since the last Active synchronization status at least once the status was Inactive. For the Two hand control type IIIC function block both dual-channel evaluations must be Inactive at the same time, for the Safety gate monitoring function block this can occur at different times as well. It is not possible to switch from Active to Discrepant and back to Active.
- the synchronization time has not elapsed or the synchronization time is deactivated, and
- after the state change of the MELSEC-WS safety controller from the Stop state to the Run state the synchronization status has been at least once Inactive. So if at the time of the transit to the Run state the inputs already stand for the Active status, the **Enable** output remains Low nevertheless.

A synchronization error (timeout) is reset, if the Active synchronization status has been reached, i.e. the **Enable** output changes to High.

Note When defining values for the synchronization time the following must be observed: The synchronization time …

- must be greater than the logic execution time,
- has a tolerance of +/- 10 ms in addition to the logic execution time. The logic execution time depends on the number and type of function blocks used and is shown in the Setting and Monitoring Tool in the logic editor on the **FB info** tab and also in the report.
- If signals from tested sensors are connected to WS0-XTDI or WS0-XTIO modules, the synchronization time should be at least the set Test gap (ms) plus the Max. off-on delay (ms), because a signal change at the module input can be delayed for this time. Both values are displayed in the Setting and Monitoring Tool report for the used test output.

Figure 180:
Sequence/timing diagram for the Safety gate monitoring function block, Category 4, dual-channel equivalent (2 pairs) without function test

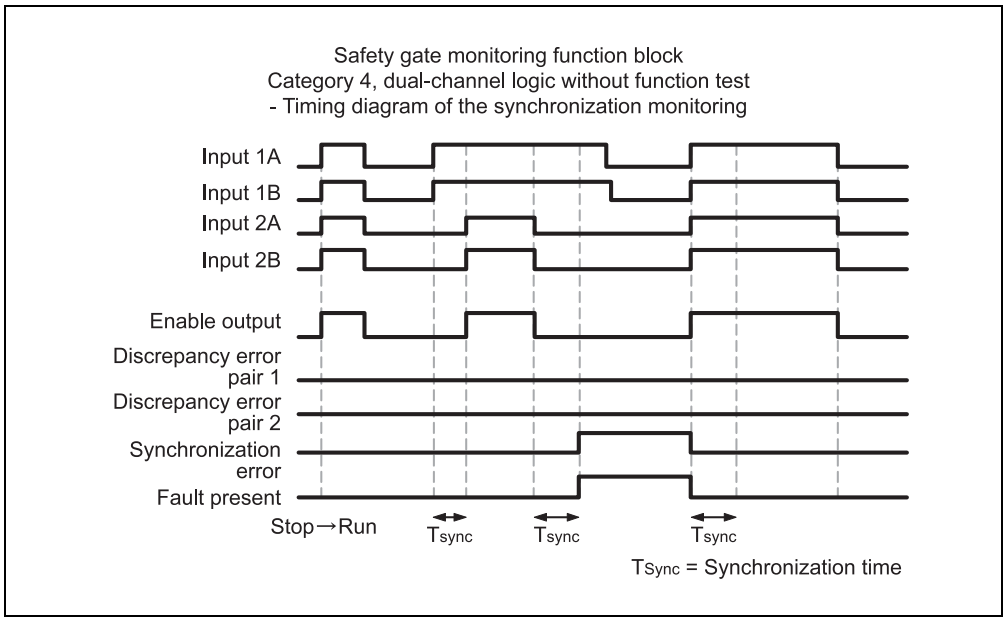

9.9.4 Emergency stop

Function block diagram

Figure 181:
Function block diagram for the Emergency stop function block

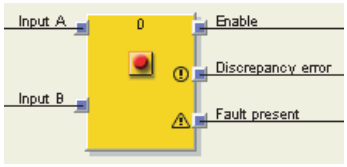

General description

The Emergency stop function block allows the implementation of an emergency stop function with an emergency stop pushbutton.

If a corresponding dual-channel input element is configured in the hardware configuration of the Setting and Monitoring Tool, this function block is no longer required in the logic since the pre-evaluation is then carried out directly on the safety I/O module (e.g. WS0-XTDI or WS0-XTIO module). But if the **Fault present** output is required for further processing, the function block can be used. To this purpose the two input signals have to be configured as single-channel signals and applied to the inputs of the function block.

In the case of emergency stop pushbuttons, a Reset and/or Restart function block has to take over the processing of the reset/restart conditions for the safety chain when the **Enable** output is set to Low. This can also be necessary for emergency stop pushbuttons with a combined push-/pull-to-unlatch mechanism.

Parameters of the function block

Table 83: Parameters of the Emergency stop function block

Parameter	Possible values
Inputs	• Single-channel • Dual-channel equivalent • Dual-channel complementary
Discrepancy time	0 = disabled, 10 to 30,000 ms in 10 ms steps. If enabled, the value has to be greater than the logic execution time.
Number of outputs	• 1 (Enable output) • 2 (Enable output and Discrepancy error output)
Use fault present	• With • Without

For further information on the behaviour of this function block please refer to Section 9.9.2.

9.9.5 Magnetic switch

Function block diagram

Figure 182: Function block diagram for the Magnetic switch function block

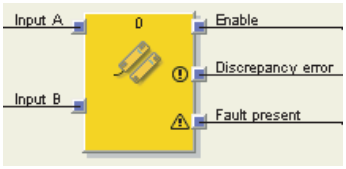

General description

The internal logic of the Magnetic switch function block corresponds to the functionality of the Emergency stop function block, only with a limited parameter selection. The function block allows graphic differentiation in accordance with the application.

The Magnetic switch function block is a predefined function block for reed switches or other sensors for which discrepancy time monitoring is required. When the evaluation of the complementary inputs is High, the **Enable** output is High (see Section 9.9.2).

Parameters of the function block

Table 84: Parameters of the Magnetic switch function block

Parameter	Possible values
Inputs	• Dual-channel equivalent • Dual-channel complementary
Discrepancy time	10 to 3000 ms in 10 ms steps. The value has to be greater than the logic execution time.
Number of outputs	• 1 (Enable output) • 2 (Enable output and Discrepancy error output)
Use fault present	• With • Without

9.9.6 Light curtain monitoring

Function block diagram

Figure 183:
Function block diagram for the Light curtain monitoring function block

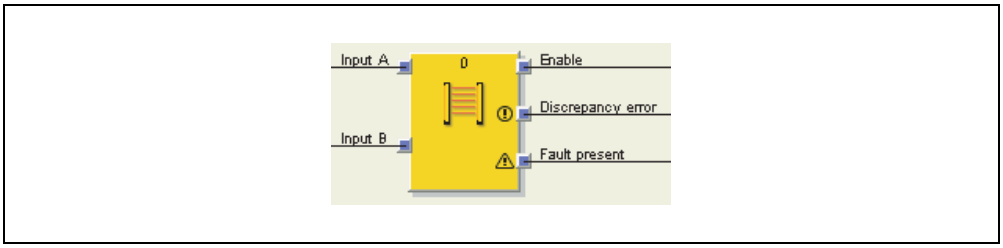

General description

The Light curtain monitoring function block allows the implementation of a semiconductor protective device functionality with ESPE.

The internal logic of the Light curtain monitoring function block corresponds to the functionality of the Emergency stop function block, however with a limited parameter selection. The single-channel input type cannot be selected in the Light curtain monitoring function block. When the evaluation of the complementary inputs is High, the **Enable** output is High (see Section 9.9.2).

Note If a corresponding dual-channel input element is configured in the hardware configuration of the Setting and Monitoring Tool, this function block is no longer required in the logic since the pre-evaluation is then carried out directly on the safety I/O module (e.g. WS0-XTDI or WS0-XTIO module). But if the **Fault present** output is required for further processing, the function block can be used to this purpose. To this purpose the two input signals have to be configured as single-channel signals and applied to the inputs of the function block.

Parameters of the function block

Table 85:
Parameters of the Light curtain monitoring function block

Parameter	Possible values
Inputs	Dual-channel equivalent
Discrepancy time	0 = disabled, 10 to 500 ms in 10 ms steps. If enabled, the value has to be greater than the logic execution time.
Number of outputs	• 1 (Enable output) • 2 (Enable output and Discrepancy error output)
Use fault present	• With • Without

9.9.7 Safety gate monitoring

Function block diagram

Figure 184:
Function block diagram for the Safety gate monitoring function block

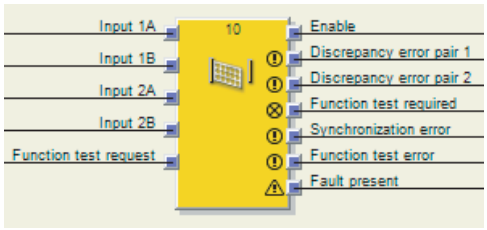

General description

The function block can be used for the evaluation of dual-channel switches. 1 pair or 2 pairs can be selected. For the behaviour of the dual-channel evaluation see Section 9.9.2 and Section 9.9.3.

Additionally the function block allows an optional function test monitoring.

Parameters of the function block

Table 86:
Parameters of the Safety gate monitoring function block

Parameter	Possible values
Inputs	• Single-channel • Dual-channel equivalent (1 pair) • Dual-channel complementary (1 pair) • Dual-channel equivalent (2 pairs) • Dual-channel complementary (2 pairs)
Function test	• No function test • Function test required
Discrepancy time pair 1 Discrepancy time pair 2	Can be set separately for the inputs 1A/1B and 2A/2B. Values: 0 = disabled, 10 to 30,000 ms in 10 ms steps. If enabled, the value has to be greater than the logic execution time.
Synchronization time	0 = disabled, 10 to 30,000 ms in 10 ms steps. If enabled, the value has to be greater than the logic execution time.
Number of outputs	1 to 6
Use fault present	• With • Without

Function test

In some applications, safeguarding devices require cyclic physical testing in order to verify that the device continues to operate properly.

If the Safety gate monitoring function block is configured with the Function test required parameter, the input signal(s) must change once per machine cycle in a way that no enable condition exists anymore and back (e.g. as a result of opening and closing of a safety gate).

Typically the **Function test request** input is connected to the machine cycle contact.

If according to the configuration a function test is required, this has to be performed under the following conditions:

- after the MELSEC-WS safety controller has changed from the Stop state to the Run state, and
- after each rising edge (Low to High) at the **Function test request** input.

This is indicated by a High signal at the **Function test required** output. The **Function test required** output changes back to Low, if a signal sequence occurs at the inputs that causes the **Enable** output to change from Low to High, before the next rising edge at the **Function test request** input occurs.

The **Function test error** output becomes High and the **Enable** output becomes Low, if the next machine cycle starts before a function test has been performed, i.e. if the **Function test required** output is still High and another rising edge (Low to High) at the **Function test request** input occurs.

The **Function test error** output changes back to Low, if a signal sequence occurs at the inputs that causes the **Enable** output to change from Low to High.

Sequence/timing diagrams

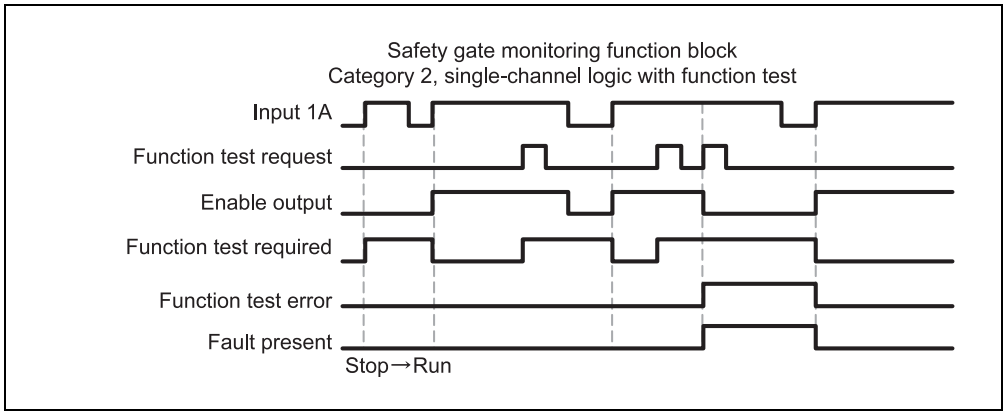

Figure 185: Sequence/timing diagram for the Safety gate monitoring function block, Category 2, single-channel with function test

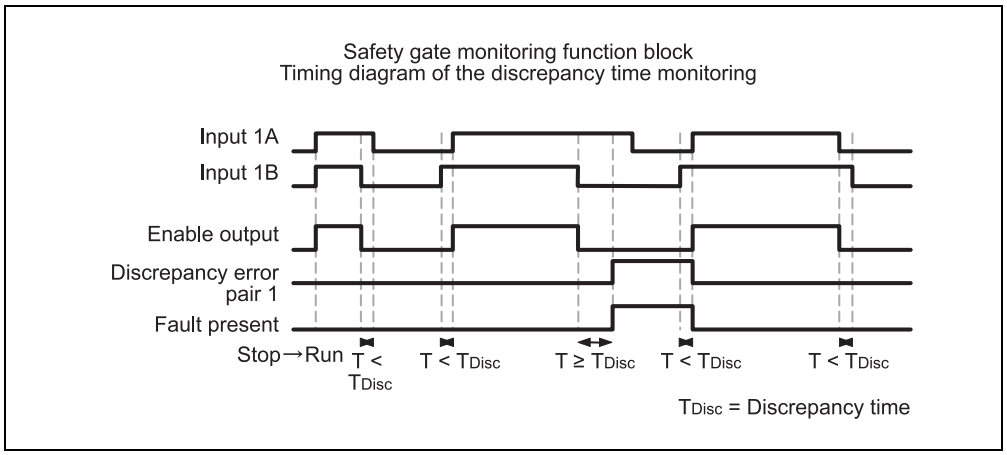

Figure 186: Sequence/timing diagram for the Safety gate monitoring function block, Category 4, dual-channel equivalent (1 pair) without function test

9.9.8 Tolerant dual channel monitor

Function block diagram

Figure 187:
Logic connections for the tolerant dual channel monitor function block

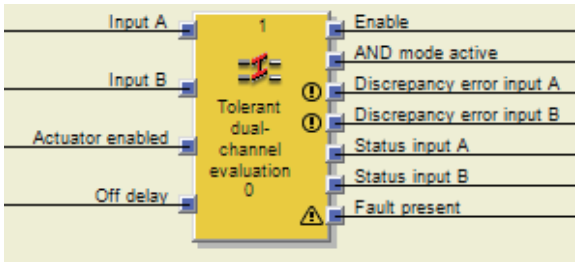

General description

The **Tolerant dual channel** monitor function block can be used to evaluate switches and sensors. It offers dual channel monitoring that is less restrictive than the normal dual channel monitor on the input/output I/O modules, e.g. WS0-XTIO or WS0-XTDI or the function blocks **Switch evaluation**, **Emergency stop**, **Light grid evaluation**, **Magnetic switch**, **Two-hand type IIIA** and **Two-hand type IIIC** (see section 9.9.2).

In the case of tolerant dual channel monitor the correct sequence of the two input signals is evaluated. During this process it is expected, if one of the two signals has caused the switch off, that the other signal will follow.

The tolerant dual channel monitor differs from the normal dual channel monitor in the following points:

- The switch off condition is allowed to be met on the two inputs with a delay. It is not imperative for the switch off condition to be met simultaneously on both inputs at least at one point in time.
- Optionally an AND mode can be activated to make the evaluation even more tolerant in certain circumstances. In this case even switching off only one input is accepted as a correct sequence without the need for the other input to follow. This situation may be acceptable if the hazardous machine parts (actuator) are safety shut down at this point in time. For this purpose the optional **Actuator released** input is connected to the signal in the logic that controls the output for the safety-related actuator release. If necessary the duration of the AND mode can be limited.
- Optionally, a brief switch off on one or both inputs can be ignored with the aid of the off-delay. If necessary the off-delay can be enabled using the **Off-delay timer** input.
- The discrepancy time monitoring can be activated separately for switching on and for switching off.

Function block parameters

Table 87: Parameters for the tolerant dual channel monitor function block

Parameters	Possible values
Input mode	• Equivalent • Complementary
Evaluation mode	• Dual channel • Dual channel/AND mode
Max. time for AND mode	0 = infinite, 1 to 60000 s
Discrepancy time on switching on	• Without • With
Discrepancy time on switching off	• Without • With
Discrepancy time	0 = infinite, 10 ms to 60 s in 10 ms increments. If the value is not 0, the value must be greater than the logic execution time
Off-delay timer input	• Without • With
Off-delay	0 to 10 s in 10 ms increments. If the value is not 0, the value must be greater than the logic execution time.
Use outputs Status input A and Status input B	• Without • With
Use Fault present	• Without • With

Dual channel monitor

The value necessary on the two signals to achieve the required state depends on the **Input mode** selected. There are two possibilities:

- equivalent evaluation
- complementary sampling

Table 88: State of the tolerant dual channel monitor as a function of the input mode

Input mode	Input A	Input B	State of the tolerant dual channel monitor
Equivalent	0	0	Inactive
	0	1	Discrepant, Input A switched off
	1	0	Discrepant, Input B switched off
	1	1	Active, if correct sequence has been followed
Complementary	0	1	Inactive
	0	0	Discrepant, Input A switched off
	1	1	Discrepant, Input B switched off
	1	0	Active, if correct sequence has been followed

Figure 188:
State diagram for the tolerant dual channel monitor function block

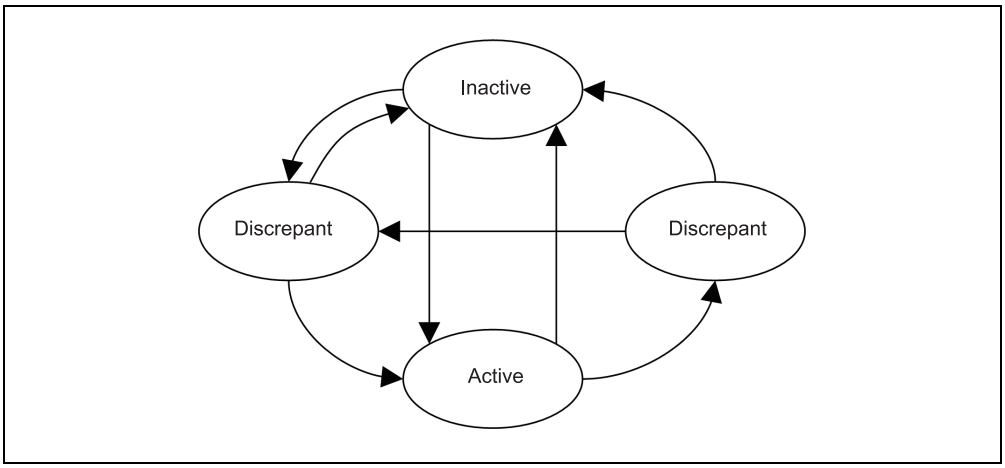

Discrepancy time

An optional discrepancy time can be defined. The discrepancy time defines how long the two inputs are allowed to have discrepant values after a change in one of the two inputs without this situation resulting in an error. **The Discrepancy error input A** and **Discrepancy error input B** outputs indicate which input has not followed in the expected time.

A discrepancy error (time-out) is reset once the active state has been achieved, i.e. a correct sequence has been followed and as a result the **Release** output changes to high.

Sequence/timing diagrams

For the change between the individual states of the tolerant dual channel monitor the following rules apply:

The tolerant dual channel monitor can only transfer to active (**Release** output changes from low to high) if the following criteria are met:

- both inputs have each switched off once since the last active state

and

- the discrepancy time has not elapsed or the discrepancy time monitoring for switching on is deactivated.

This means that it is not possible to change from active to discrepant and back again if only one input has switched off.

Note The sequence/timing diagrams shown in this section relate to the equivalent input mode. For the complementary input mode, input B is to be considered inverted.

Figure 189:
Sequence/timing diagram for the tolerant dual channel monitor function block — change to active

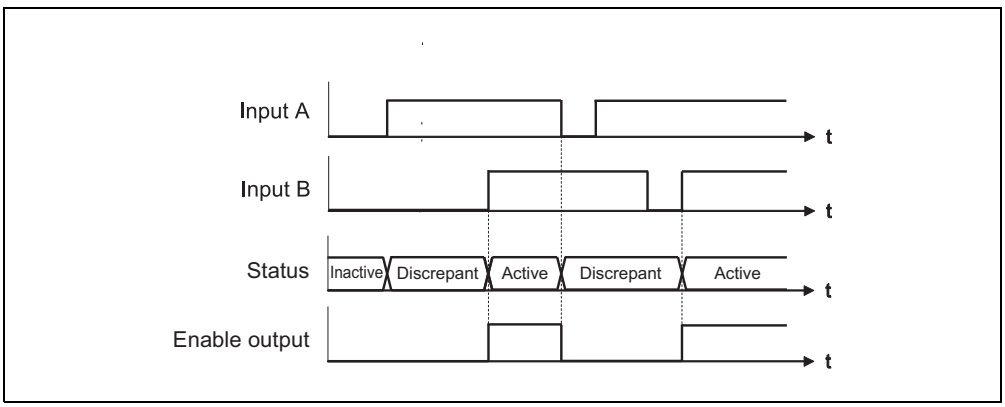

Fault present and resetting errors

The Fault present output is a combined error output and changes to high if one of the following cases occurs:

- The discrepancy time on switching on is activated and has elapsed or
- The discrepancy time on switching off is activated and has elapsed.

All error states and error outputs (**Discrepancy error input A, Discrepancy error input B, Fault present**) are reset on a successful change to the active state (**Release** output changes from low to high). In addition, both inputs must have previously switched off simultaneously.

Figure 190: Sequence/timing diagram for the tolerant dual channel monitor function block — resetting errors

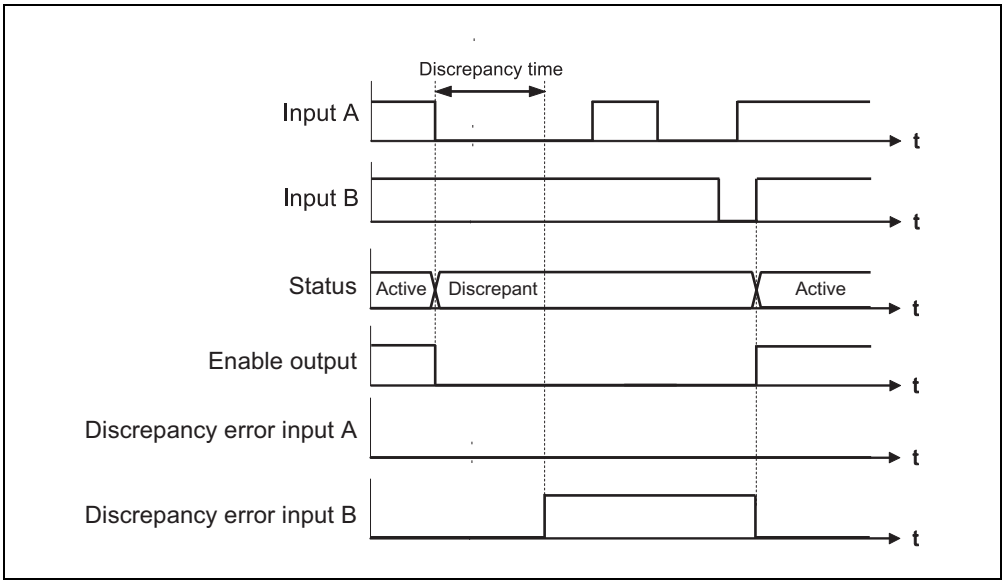

AND mode

If, for the **Evaluation mode**, the **Dual channel/AND mode** option has been selected, then the two inputs are monitored based either on the tolerant dual channel rules or only as a logic AND, depending on the **Actuator released** input.

If the AND mode is active, then it is possible to change back to the active state by switching off and switching back on only one input, without the need for the other input to switch as well. If one or both of the inputs switches off, in all cases the **Release** output is also switched off. The value for switching off due to **Input B** is also dependent on the input mode in the AND mode.

The AND mode is activated if a falling edge (transition from high to low) occurs on the **Actuator released** input and the **Release** output is high. If the Release output is high at this point in time, then this means that the switch off has been triggered by a different signal path that is also acting on the actuator.

The AND mode is deactivated again if the **Actuator released** input is high or if the **Max. time for AND mode** has elapsed. When the **Max. time for AND mode** elapses it has no effect on the **Fault present** output.

In AND-mode the discrepancy time is not monitored.

Figure 191: Sequence/timing diagram for the tolerant dual channel monitor function block — AND mode

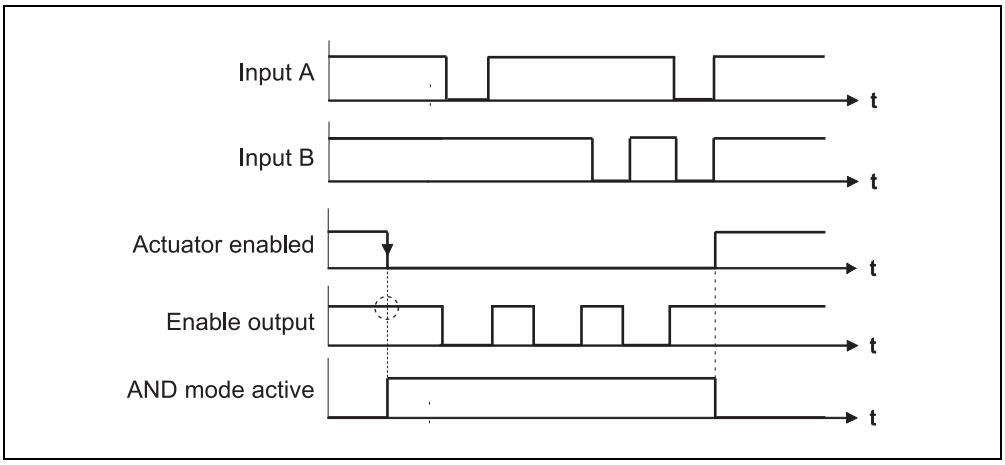

Off-delay

Using the off-delay, briefly switching off one or both inputs can be ignored and the **Release** output remains high. If one or both of the inputs is/are still switched off after the off-delay has elapsed, then the **Release** output changes to low.

If the optional **Off-delay timer** input is used, then the off-delay is only effective if this input is high. If the Off-delay timer input is low, then switching off one or both inputs has an immediate effect.

The off-delay is effective in both the dual channel mode and also in the AND mode.

Figure 192: Sequence/timing diagram for the tolerant dual channel monitor function block — off-delay

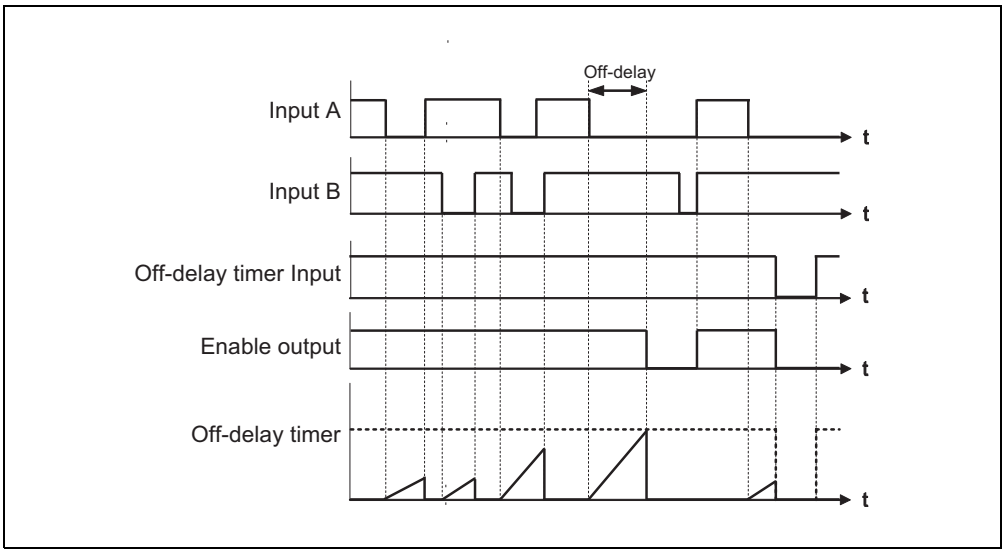

Status input A/B

The two **Status input A** and **Status input B** outputs indicate the internal value on the two inputs A and B. The outputs correspond to the value on the **Input A** and **Input B** inputs with the following exceptions:

- The status output indicates the value for “Switched off”, even though the related input is switched on (with input mode = equivalent: low instead of high), as the other input must first switch off before it is possible to switch on again (**Release** output changes to high).
- The status output indicates the value for “Switched on”, even though the related input is switched off (with input mode = equivalent: high instead of low), as the off-delay is active and switching off is currently prevented internally.

9.9.9 Two-hand control type IIIA

Function block diagram

Figure 193:
Function block diagram for the Two-hand control type IIIA function block

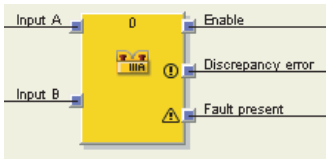

General description

The Two-hand control type IIIA function block is a predefined function block for two-hand control sensors for which discrepancy time monitoring on equivalent inputs is required. The discrepancy time monitoring is used to monitor the synchronous actuation of two-hand circuits of type IIIA in the context of EN 574.

The internal logic of the Two-hand control type IIIA function block corresponds to the functionality of the Emergency stop function block, only with a limited parameter selection. The function block allows graphic differentiation in accordance with the application.

Input A and **Input B** form a dual-channel evaluation and must be equivalent. When the evaluation of the inputs is High, the **Enable** output is High (see Section 9.9.2).

The discrepancy time is set to 500 ms (the discrepancy time is fixed and cannot be changed).

Parameters of the function block

Table 89:
Parameters of the Two-hand control type IIIA function block

Parameter	Possible values
Inputs	Fixed value: Dual channel equivalent
Discrepancy time	Fixed value: 500 ms (equivalent to the discrepancy time according to EN 574)
Number of outputs	• 1 (Enable output) • 2 (Enable output and Discrepancy error output)
Use fault present	• With • Without

9.9.10 Two-hand control type IIIC

Function block diagram

Figure 194:
Function block diagram for the Two-hand control type IIIC function block

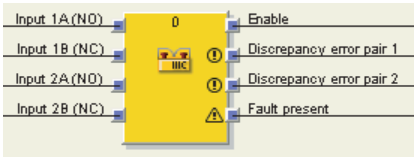

General description

The Two-hand control type IIIC function block provides the logic for monitoring the inputs of a two-hand control in accordance with EN 574/ISO 13851.

ATTENTION

Use the Two-hand control type IIIC function block only in combination with a WS0-XTIO or a WS0-XTDI module!

The Two-hand control type IIIC function block requires the usage of a WS0-XTIO or a WS0-XTDI module. Otherwise the requirements of EN 574/ISO 13851 are not fulfilled.

In the hardware configuration the used inputs must be configured as single channel signals, i.e. no dual channel input evaluation on the safety I/O module.
When displaying a report in a circuit including the Two hand control type IIIC function block, the synchronization time is displayed.

Parameters of the function block

Table 90: Parameters of the Two-hand control type IIIC function block

Parameter	Possible values
Discrepancy time pair 1	0 = disabled, 10 to 500 ms in 10 ms steps. If enabled, the value has to be greater than the logic execution time.
Discrepancy time pair 2	0 = disabled, 10 to 500 ms in 10 ms steps. If enabled, the value has to be greater than the logic execution time.
Number of outputs	• 1 (Enable output) • 2 (Enable output and Discrepancy error pair 1 output) • 3 (Enable output, Discrepancy error pair 1 output and Discrepancy error pair 2 output)
Use fault present	• With • Without

The function block evaluates its input signals in pairs. **Input 1A** and **Input 1B** form a dual-channel evaluation and have to be complementary. **Input 2A** and **Input 2B** form a dual-channel evaluation and also have to be complementary. A discrepancy time can be specified for each of both input pairs.

The synchronization time is the time during which the input pairs may have different values. As specified in the standards and regulations, the synchronization time for a two-hand switch evaluation may not exceed 500 ms (the synchronization time is preset and cannot be changed).

For the behaviour of the double dual-channel evaluation see Section 9.9.2 and Section 9.9.3.

The synchronization evaluation for the Two hand control type IIIC function block differs from the Safety gate monitoring function block with regard to the condition for the Inactive synchronization status. For the Two hand control type IIIC function block, both dual-channel evaluations must be Inactive, i.e. the inputs A/B of both input pairs must be Low/High at the same time.

Furthermore the Two hand control type IIIC function block has no **Synchronization error** output, because with a two hand control it is not regarded as an error if not both manual switches are actuated within the specified 500 ms. However this synchronization time may not be exceeded, because otherwise the **Enable** output will not change to High.

Sequence/timing diagram

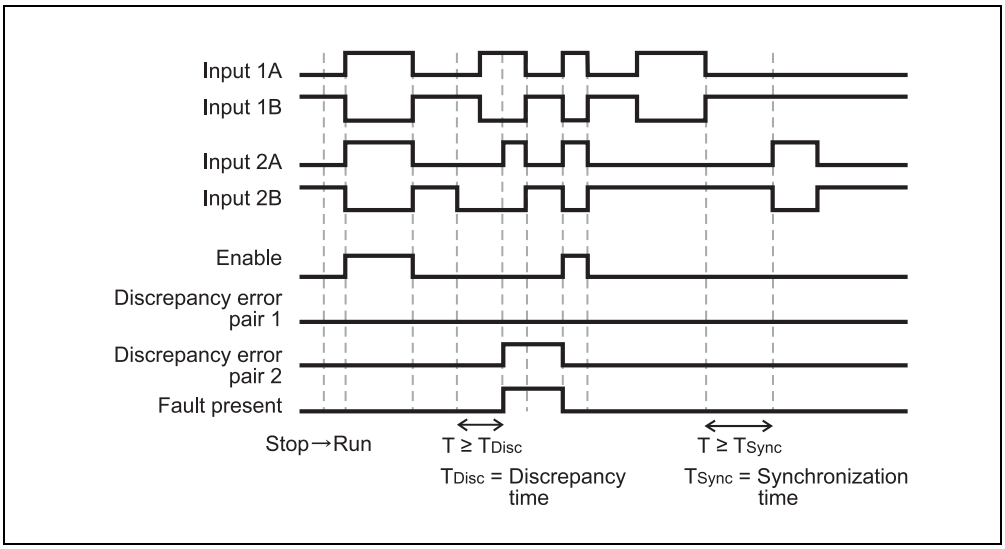

Figure 195: Sequence/timing diagram for the Two hand control type IIIC function block

9.9.11 Multi operator (multiple two-hand control)

Function block diagram

Figure 196:
Function block diagram for the Multi operator function block

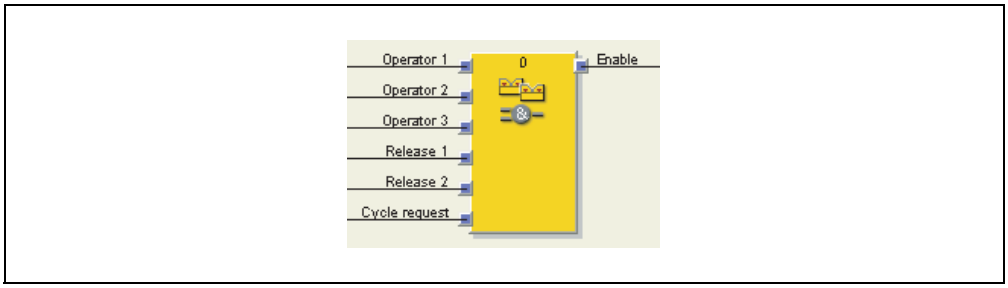

General description

The Multi operator function block is used to monitor simultaneous operation of up to three two-hand controls. For example, several two-hand controls or foot switches can be necessary in a press application with more than one operator in order to trigger the downward movement of the press. Typically, each **Operator** input is connected to a Two-hand control function block.

Release inputs (e.g. safety light curtains) can be connected optionally in order to ensure that the assigned devices are High before the **Enable** output can become High. Resetting and restarting need to be handled independently of this function block.

The **Cycle request** input can be used to enforce that each connected two-hand control is released at least once before another start is possible. Typically this input is connected to a signal that generates a pulse with each machine cycle. In this way it can be prevented that one or more of the two-hand controls remain actuated permanently.

ATTENTION

The Operator inputs and the Release inputs must be pre-evaluated signals!

- Connect only safe pre-evaluated signals to the Operator inputs, e.g. the **Enable** output of a Two-hand control type IIIA or Two-hand control type IIIC function block. A safety-relevant evaluation of the inputs of a two-hand control has to be effected either by another function block (e.g. Two-hand control or Light curtain monitoring) or as a part of the configuration of the safety inputs (e.g. configuration of the inputs with dual-channel evaluation).
- The **Cycle request** input must not be used for safety functionality. This input is for automation control functionality only.

Parameters of the function block

Table 91:
Parameters for the Multi operator function block

Parameter	Possible values
Cycle request condition	• Rising edge • Falling edge
Number of operators	• 2 operators • 3 operators
Number of static releases	• 0 • 1 • 2

The **Enable** output changes to High, if …

- all **Release** inputs are High and stay High, and
- each activated **Operator** input has changed to Low at least once (this may occur at different times as well) after the MELSEC-WS safety controller has changed from the Stop state to the Run state or after a rising or a falling edge (depending on the configuration) has been detected at the **Cycle request** input, and
- all activated **Operator** inputs have changed to High subsequently.

The **Enable** output changes to Low, if …

- one or more of the **Release** inputs is Low, or
- one or more of the **Operator** inputs is Low, or
- a rising or a falling edge (depending on the configuration) has been detected at the **Cycle request** input.

Sequence/timing diagram

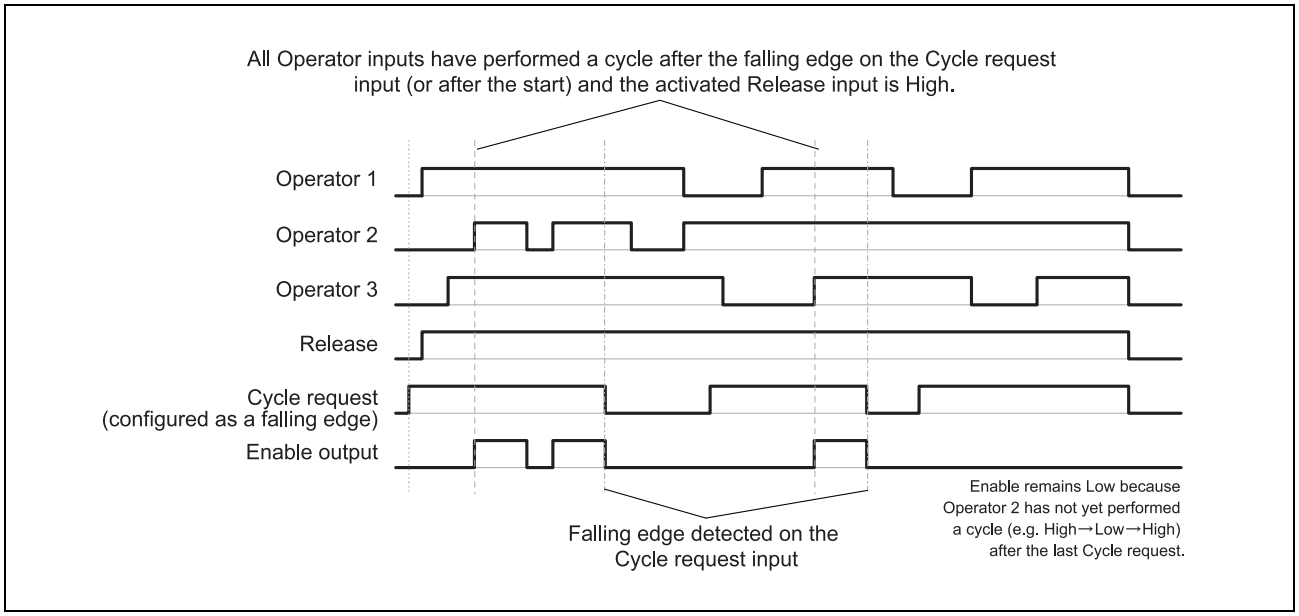

Figure 197:
Sequence/timing diagram for the Multi operator function block

9.10 Function blocks for Parallel muting, Sequential muting and Cross muting

9.10.1 Overview and general description

Muting is the automatic temporary suppression of safety-oriented area monitoring using electro-sensitive protective equipment (ESPE) while certain objects, e.g. pallets with material, are moved into the hazardous area.

Muting sensors monitor the presence of the material while it is being transported. Careful selection of the type and layout of the sensors makes it possible to differentiate between objects and persons.

In combination with the muting sensors and the ESPE the transported object generates an exactly defined signal sequence while it is moved through the hazardous area. The muting sensors have to ensure that all dangers are excluded when a person enters an area protected by the ESPE (i.e. any dangerous state has to be terminated immediately). It has to be impossible for a person to generate the same signal sequence as a transported object.

The placement of the muting sensors is determined by the form of the object to be detected. To this purpose the following options are, amongst others, available with differing numbers of sensor input signals:

- two sensors
- two sensors and an additional signal C1
- four sensors (two sensor pairs)
- four sensors (two sensor pairs) and an additional signal C1

Muting sensor signals can be generated by the following external sensors:

- optical sensors
- inductive sensors
- mechanical switches
- signals from the control system

If you use optical sensors for muting applications, use sensors with a background suppression in order to ensure that only the transported material fulfills the muting condition. These sensors detect material only up to a specific distance. Objects that are further away can therefore not fulfill the input conditions of the muting sensors.

Three different function blocks are available for muting:

- Parallel muting (muting with two parallel sensor pairs)
- Sequential muting (muting with two sequential sensor pairs)
- Cross muting (muting with one crossed sensor pair)

Note

- The muting cycle is the specified sequence of all processes that are executed during muting.
- The muting cycle begins when the first muting sensor is activated. The muting cycle ends depending on the configuration in the function block for the muting end condition. It is not possible to activate muting again until the preceding muting cycle has been terminated.
- Material can be transported several times within one muting cycle if the muting conditions are maintained permanently in the process, meaning that at least one pair of sensors remain activated permanently.

Since muting bypasses the safety functions of a protective device, several requirements have to be fulfilled, as shown below, in order to ensure the safety of the application.

ATTENTION

The general safety regulations and protective measures have to be observed!

If you use muting, be sure to observe the following information about the correct use of muting:

- Access to the hazardous area has to be detected reliably by the ESPE or be excluded through other measures. It has to be impossible for a person to pass by, pass over, pass under or cross the ESPE without being detected. Observe the manual of the ESPE for the correct installation and use of the device.
- Always observe the valid applicable local, regional and national regulations and standards applying to your application. Ensure that your application conforms to an appropriate risk analysis and avoidance strategy.
- Muting may never be used to transport a person into the hazardous area.
- Mount the control devices for resetting and overriding outside the hazardous area so that they cannot be actuated by a person located in the hazardous area. Furthermore, when operating a control device, the operator must have full visual command of the hazardous area.
- The muting sensors have to be located in such a way that the hazardous area can only then be accessed after an intervention in the protective field, if the dangerous state has been terminated before. One condition here is that the required safety distances defined in EN/ISO 13855 are observed. At least two muting signals that are independent of each other are required.
- Muting may only be activated for the period in which the object that triggered the muting condition blocks access to the hazardous area.
- The area between the ESPE and the muting sensors must be protected against standing behind:
  - For Parallel muting between ESPE and sensors A1/A2 and between ESPE and sensors B1/B2 (see Figure 202).
  - For Sequential muting between ESPE and sensor A2 and between ESPE and sensor B1 (see Figure 205).
  - For Cross muting between ESPE and sensor A1 and between ESPE and sensor A2 (see Figure 208)
- Muting has to be carried out automatically, but may not depend on a single electrical signal.
- The material to be transported has to be detected along the entire length, meaning that an interruption of the output signals may not occur (see Suppression of sensor signal gaps).
- Muting must be triggered by at least two independently wired signals (e.g. by muting sensors) and may not depend completely on software signals (e.g. from a programmable controller).
- The muting condition has to be terminated immediately after the passage of the object so that the protective device returns to its normal state that was bypassed by muting (i.e. so that it comes back into force).
- The muting sensors have to be positioned in such a way that muting cannot be triggered unintentionally by anyone (see Figure 198).

Figure 198:
Safety when mounting the muting sensors

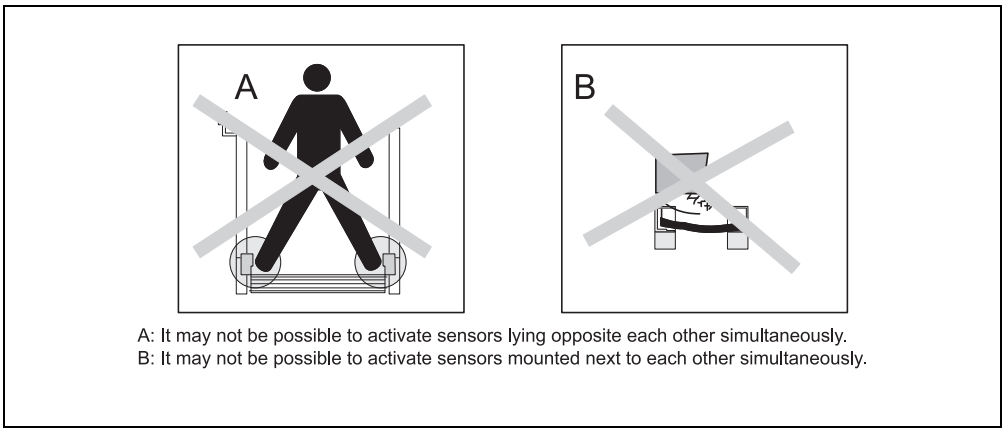

- Always position the muting sensors in such a way that only the material is detected and not the conveyance means (pallet or vehicle).

Figure 199:
Detection of material during muting

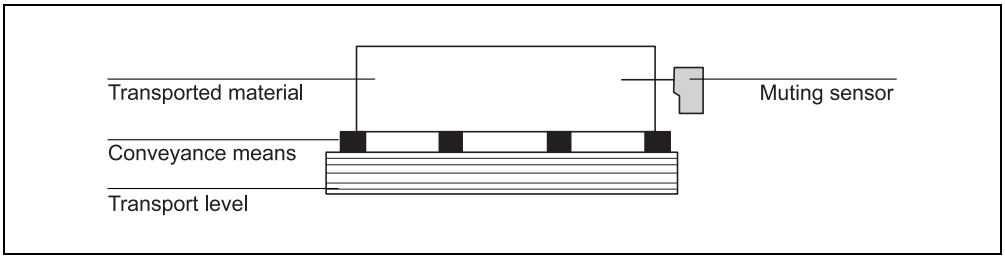

- Always position muting sensors in such a way that the material can pass unimpeded, but persons are detected reliably.
- Always position the muting sensors in such a way that a minimum distance to the detection area of the ESPE (e.g. to the light beams of a light curtain) is observed while the material is being detected.
- It has to be ensured that no persons are within the hazardous area before and during the activation of an override.
- Before you activate the override ensure that the equipment is in a perfect condition, in particular the muting sensors (visual inspection).
- When it has been necessary to activate an override, subsequently check whether the equipment functions properly and the layout of the muting sensors.
- During long muting cycles (i.e. longer than 24 hours) or during longer machine downtimes check that the muting sensors function correctly.
- A muting and/or override lamp has to be used in order to signal that the muting or override function is active. It is possible to use an external muting/override lamp or one that is integrated in the protective device (ESPE).
- It may be necessary to monitor the muting/override lamp depending on your local, regional and national regulations and standards. If this is the case, this has to be realized by additional means. WS0-XTIO and WS0-XTDI modules do not support lamp monitoring.
- Always position the muting or override lamp so that it can be seen well! It must be possible to see the muting or override lamp from all positions around the hazardous area and for the system operator.
- If safety-relevant information (i.e. distributed safety input values and/or safety output values) is transferred via a safety field bus network, always take the corresponding delays into account. These delays can influence both the system behaviour as well as the requirements for the minimum safety distances that are connected to the response times.

- When an override input is configured, test pulse outputs may not be used for the configuration of the safety inputs.
- Separate lines have to be used for the sensor signals A1 and A2 (B1 and B2).
- A line that is independent of other input signals has to be used for the signals for Reset and Reset required in order to exclude unintentional resetting of the system. The line must furthermore be laid protected.
- The total muting time cannot be set to indefinite (inactive) without additional precautions being taken. If the total muting time is set to indefinite, additional measures have to be taken to ensure that no one can access the hazardous area while muting is activated.

9.10.2 Parameters of the function blocks

The following table lists the possible configuration parameters of the muting function blocks.

Table 92: Parameters of the muting function blocks

Parameter	Possible values
Direction detection	• Disabled Only with Parallel muting and Sequential muting: • Forward (A1/A2 first) • Backward (B1/B2 first)
Sequence monitoring	Not selectable. Defined by selection of the muting function block: • Enabled: With Sequential muting • Disabled: With Parallel muting or Cross muting
Condition of other sensor pair for muting start	• Both inputs are clear Only with Parallel muting and Sequential muting: • If last muting sensor is active
Muting end condition	• With muting sensor pair • With ESPE
Muting total time	0 = disabled, 5 s to 3600 s, resolution 1 s
Add. muting time when ESPE is clear	0 ms, 200 ms, 500 ms, 1000 ms
Sensor signal gap monitoring	0 = disabled, 10 to 1000 ms, resolution 10 ms. If enabled, the value has to be greater than the logic execution time.
Concurrency monitoring time	0 = disabled, 10 to 3000 ms, resolution 10 ms. If enabled, the value has to be greater than the logic execution time.
C1 input	• With • Without
Conveyor input	• With • Without
Override input	• With • Without
Min. override pulse time	• 100 ms • 350 ms

Direction detection

Direction detection is used when the transported material has to be moved in a specific direction. The direction depends on the sequence in which the muting sensors are activated.

If direction detection is disabled, the material to be transported can be moved in both directions in order to fulfill the muting conditions. In this case it is not relevant which sensor pair is activated first.

If **Forward (A1/A2 first)** was selected as the direction, the muting sensor pairs have to be activated in the sequence (A1/A2) before (B1/B2). Muting is not possible in the opposite direction. Muting is terminated by a transition from four active sensors to an inactive sensor pair “B” (no sensor or one sensor active).

If **Backward (B1/B2 first)** was selected as the direction, the muting sensor pairs have to be activated in the sequence (B1/B2) before (A1/A2). Muting is not possible in the forward direction. Muting is terminated by a transition from four active sensors to an inactive sensor pair “A” (no sensor or one sensor active).

Condition of other sensor pair for muting start

The **Condition of other sensor pair for muting start** parameter determines when a valid muting sequence can begin. The **Condition of other sensor pair for muting start** can be defined for one of the following conditions:

- **Both inputs are clear**: All muting sensors have changed to Low together or individually and the OSSDs of the protective device (e.g. safety light curtain) are High (i.e. the protective field is clear),

  or

- **If last muting sensor is active**: All muting sensors except the last muting sensor are Low and the OSSDs of the protective device (e.g. safety light curtain) are High (i.e. the protective field is clear).

If a higher throughput is required, it can be advantageous to allow the beginning of the next muting sequence as soon as the transported material has passed the protective device as well as all muting sensors with the exception of the last one (i.e. **If last muting sensor is active**).

Muting end condition

In contrast to the **Condition of other sensor pair for muting start**, the **Muting end condition** determines when a valid muting state ends. You can choose when the **Muting end condition** occurs:

- **With muting sensor pair**: When a muting sensor of the last muting sensor pair changes to Low (sensor clear),

  or

- **With ESPE**: When the OSSDs of the protective device (e.g. safety light curtain) indicate that the protective field is no longer violated, i.e., the protective field is clear, and the OSSDs return to High.

If after the muting end the OSSD input of the ESPE becomes Low (e.g. by a violation of the protective field of the ESPE) before the next valid muting sequence has begun, the **Enable** output of the function block becomes Low. The next muting cycle cannot begin until the **Muting end condition** has been fulfilled.

Muting total time

The **Muting total time** is used in order to limit the maximum duration of the muting sequence. If the set value for the **Muting total time** is exceeded, the **Muting error** and **Fault present** outputs change to High and the **Enable** output changes to Low.

The timer for the **Muting total time** begins when the muting function is activated, indicated by the transition of the **Muting status** output to High. The timer for the **Muting total time** is stopped and reset to zero when the muting function changes to Low. If the optional Conveyor input is used, the timer for the Muting total time pauses when the Conveyor input remains High, indicating that the conveyor belt has stopped.

Add. muting time when ESPE is clear

The **Add. muting time when ESPE is clear** parameter is used when the **Muting end condition** has been configured as **With ESPE**. If the ESPE does not always detect the muting end exactly because of irregularities in the material or the transport means, you can increase the availability of the machine by configuring an additional muting time of up to 1000 ms. Only in this case does the **Add. muting time when ESPE is clear** parameter determine the additional muting time after the OSSDs of the ESPE have returned to High, i.e. that the safety light curtain is no longer interrupted.

Concurrency monitoring time

The **Concurrency monitoring time** is used to check whether the muting sensors are activated simultaneously. This value specifies the maximum duration for which each of the two dual-channel evaluated muting sensor inputs may have different values without this being evaluated as an error. This means that input pair A1 and A2 or input pair B1 and B2 must have equivalent values before the **Concurrency monitoring time** has expired.

Concurrency monitoring begins with the first change of an input value of a muting sensor. If the **Concurrency monitoring time** has expired and the two inputs of an input pair still have different values, an error occurs.

If the concurrency monitoring determines an error for at least one input pair, the function block indicates this error by setting the **Muting error** output to High.

Sensor signal gap monitoring

Occasionally faults occur in the output signals of muting sensors that may not be relevant for muting. The **Sensor signal gap monitoring** function allows to filter out brief faults without muting being interrupted.

When **Sensor signal gap monitoring** is enabled, a Low signal from a muting sensor input is ignored for the duration of the set value for **Sensor signal gap monitoring**. The function block continues to interpret this signal as an uninterrupted High as long as only one sensor per pair A1/A2 or B1/B2 has a signal gap. If a signal gap has been detected at a sensor, the simultaneous occurrence of a further signal gap at the other sensor of the sensor pair results in the termination of muting.

Sequence monitoring

Sequence monitoring is used to define a special mandatory sequence in which the muting sensors have to be High. Table 93 shows the valid sequence for muting sensor input signals. This parameter is only available for configurations with four muting sensors, for example for parallel muting or sequential muting.

Table 93: Requirements for sequence monitoring

Direction detection	Requirement for the muting sensor signal inputs for sequence monitoring:
Disabled	A1 before A2 before B1 before B2 or B2 before B1 before A2 before A1
Forward	A1 before A2 before B1 before B2
Backward	B2 before B1 before A2 before A1

This parameter depends on the function block. Deviations from the sequence shown above result in a muting error, indicated by the **Muting error** output. In order to avoid machine downtime the configured time for the **Sensor signal gap monitoring** should furthermore be shorter than the time span that the transported object requires to pass a muting sensor pair (e.g. A1/A2 or B1/B2).

C1 input

The **C1** input is used as an additional measure to avoid manipulations. If **C1** is used, a transition from Low to High has to take place before the first muting sensor pair becomes High. Input **C1** must then remain High until both sensors of the muting sensor pair are High so that a valid muting condition can arise. If this condition is not fulfilled, this results in a muting error, indicated by the **Muting error** output. The **C1** input subsequently has to return to Low again before the next muting cycle is permitted.

Override input

An **Override** input signal is used to remove transported objects that have remained in the protective field of the protective device (e.g. safety light curtain) after power failures, triggering of an emergency stop, muting errors or similar circumstances.

The **Override** status output (available from firmware V3.02) changes to high and the Override required output pulses at 2 Hz, if the following conditions are met:

- Muting is currently inactive (i.e. **Muting status** is Low).
- At least one muting sensor is High.
- The OSSDs of the ESPE are Low (e.g. safety light curtain is interrupted).
- The **Enable** output is Low.

If the conditions for the **Override required** output are fulfilled and a valid override pulse sequence with a Low-High-Low transition (minimum 100 ms or 350 ms and maximum 3 s; longer or shorter pulses are ignored) has occurred at the **Override** input, the **Enable** output becomes High, as if the muting conditions were fulfilled. When all muting sensors have returned to Low and the OSSD input of the ESPE is High (e.g. indicating that the protective field of a safety light curtain is now clear), the next valid muting cycle is expected. If the next object does not fulfill the conditions for a muting cycle, but the conditions for the **Override required** output, a further override cycle can be used in order to remove the transported material. The number of override cycles is limited (see Table 95).

Note A reset button can also be suitable for the override function. Check the requirements of your application in order to ensure that the safety-relevant logic fulfils the requirements of the local, regional, national and international regulations.

Table 94 provides information about the **Override required** output and when Override is possible under the shown conditions and when not.

Table 94: Conditions for Override required and Override possible

Muting status	At least one muting sensor is High	OSSDs of the ESPE are High	Override required output	Override possible
0	No	0	No	No
0	No	1	No	No
0	Yes	0	Pulses at 2 Hz	Yes, if the maximum permissible number of override cycles is not exceeded.
0	Yes	1	No	No
1	No	0	No	No
1	No	1	No	No
1	Yes	0	No	No
1	Yes	1	No	No

Figure 200 shows an example sequence for **Override** and **Override required**.

Figure 200: Logic diagram for Override and Override required

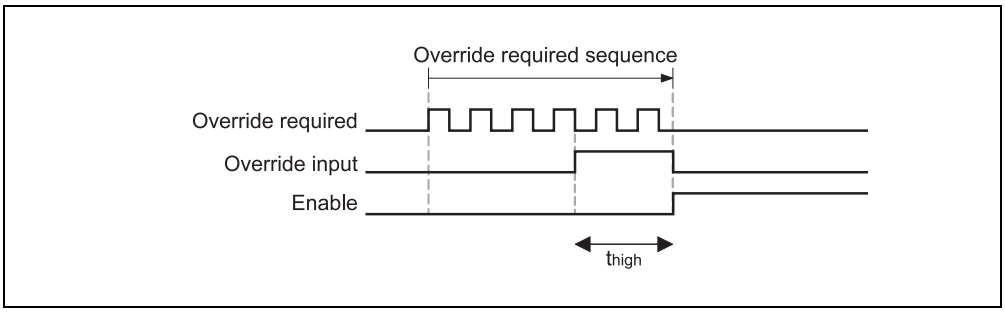

Note t_{high} has to be equal to or greater than the minimum override pulse time (100 ms or 350 ms), but less than or equal to 3 s. If t_{high} is shorter than the minimum override pulse time or greater than 3 s, the **Override input** is ignored.

ATTENTION

If you use Override, check whether the system is in a safe state!

The Override function is used to activate the safety output (i.e. the **Enable** output) of the muting function block although the safety device (e.g. a safety light curtain) signals that a dangerous state may exist. The **Override** input should only be used when the hazardous area has been checked visually and nobody is in the hazardous area or has access to the hazardous area while the **Override** input is being used.

Ensure that the transitions of the signals for Override fulfill the requirements of the safety standards and regulations!

In case of a short-circuit to High (to 24 V DC) at a physical input, the evaluated signal can have a pulse when the signal is reset due to the short-circuit detection. If such a pulse can result in a dangerous state in the machine, the following points have to be observed:

- Ensure protected cable laying for the signal line (due to cross-circuiting to other signal lines).
- No short-circuit detection, i.e. do not reference to test outputs.

During an override cycle, the **Enable** output is set to High as during a valid muting sequence. The number of permissible override cycles is limited in order to prevent excessive use of the override function. The number of permissible override cycles depends on the value for the total muting time. Table 95 summarizes the number of permissible override cycles:

Table 95: Number of permissible override cycles

Total muting time	Number of permissible override cycles	Remarks
5 s	360	Maximum number of override cycles = 360
10 s	360	
20 s	180	= 60 min/total muting time
30 s	120	
1 min	60	
5 min	12	
15 min	5	Minimum number of override cycles = 5
30 min	5	
60 min	5	
Disabled (unlimited)	5	

The number of override cycles is stored in the function block. The value is incremented each time the **Override required** output starts pulsing or the Override status output changes to high. The value is reset to “0”, after a valid muting cycle has occurred, after a system reset (e.g. using the Setting and Monitoring Tool) or after a transition from the Stop state to the Run state.

After the **Override required** output has started pulsing at 2 Hz and a subsequent **Override** signal has become High, Muting begins again and the **Enable** output becomes High.

If the muting cycle is stopped because of a faulty input signal of a muting sensor, **Override required** changes to High for the duration of the logic execution time, provided that the remaining conditions for Override required are fulfilled. If the faulty input of the muting sensor returns to High and subsequently to Low, the muting cycle is stopped again and **Override required** becomes High, provided that the remaining conditions for **Override required** are fulfilled.

During a valid override state, the direction detection, sequence monitoring (depending on the function block) and concurrency monitoring are not carried out for the duration of an override cycle.

Conveyor input

If the movement of the transported material is stopped during the muting cycle, the total muting time and other parameters that can result in a muting error may be exceeded. This can be avoided by using the **Conveyor** input. This input is used to stop time-related functions connected with muting when the material to be transported does not move further.

The **Conveyor** input has to fulfill EN 61131/IEC 61131 and has the following properties:

0 V DC = conveyor belt stopped, e.g. Low

24 V DC = conveyor belt running, e.g. High

The following timer functions are influenced by the value of the **Conveyor** input:

Table 96:
Effects of the conveyor belt monitoring on the timer functions

Monitoring function	Effect of the Conveyor input
Monitoring of the total muting time	• If a belt stop is detected, these timer functions pause. • If the conveyor belt starts up again, the timer continues its function with the value stored before the belt stop has been detected. If this occurs the first time, the total muting time is increased once by 5 seconds.
Concurrency monitoring	

Note The **Sensor signal gap monitoring** is not influenced by a belt stop.

Min. override pulse time

The **Min. override pulse time** determines the minimum High duration for a valid pulse sequence at the **Override** input.

Muting status output

The **Muting status** output indicates the state of the muting function in accordance with the following table:

Table 97:
Output values for muting status

Condition	Muting status output
Muting cycle inactive, no error	Low
Muting cycle active, no error	High
Muting error detected	Low
Override active, no error	High

Muting lamp output

The **Muting lamp** output is used in order to indicate an active muting cycle. The value for the **Muting lamp** output depends directly on the value of the **Muting status** output as shown in the following table:

Table 98:
Output values for the Muting lamp output

Status of the Muting function block	Value of the Muting lamp output
Muting status output is Low	Low
Muting status output is High	High
Override cycle active	High
Override required	Pulses at 2 Hz

Muting error output

The **Muting error** output is used to indicate that an error connected to the muting function block has been detected. The **Muting error** output becomes High when any muting error has been detected. In order to reset a muting error it is necessary that all muting sensors return to Low and that the OSSD signal of the ESPE is High.

Enable output

The **Enable** output is High if a valid muting condition exists, a valid override cycle occurs or if the OSSD input of the ESPE is clear and no error/error state is active.

9.10.3 Information on wiring

If muting functions are to be implemented, possible errors in the wiring have to be taken into consideration. If certain signal combinations are to be transferred in a common wire, additional precautions have to be taken in order to ensure that the respective signals are correct. Suitable measures have to be taken (e.g. protected wiring) in order to ensure that errors cannot arise through this wiring.

Table 99:
Wiring combinations for muting and prerequisites

Signal description	A1	A2	B1	B2	C1	Conveyor	ESPE	Override input	Enable output	Muting lamp	Muting status	Override required
A1	–	A	B	B	A	A	A	A	A	A	A	C
A2	A	–	B	B	A	A	A	A	A	A	A	C
B1	B	B	–	A	A	A	A	A	A	A	A	C
B2	B	B	A	–	A	A	A	A	A	A	A	C
C1	A	A	A	A	–	A	A	A	A	C	C	C
Conveyor	A	A	A	A	A	–	C	A	A	C	C	C
ESPE	A	A	A	A	A	C	–	C	A	C	C	C
Override input	A	A	A	A	A	A	C	–	A	A	C	A

A The specified signals may not be installed in a common wire unless protected wiring is used.

B The specified signals may not be installed in a common wire unless protected wiring or sequence monitoring is used.

C The specified signals may be installed in a common wire.

– Not applicable

9.10.4 State transition from Stop to Run

If the MELSEC-WS safety controller changes from the Stop state to the Run state, the following behavioural patterns can be realized, depending on the state of the muting sensors and of the OSSDs of the sensors (e.g. safety outputs of a safety light curtain). Table 100 shows details of the system behaviour during the transition from Stop to Run.

Table 100: Stop-to-Run transition behaviour for muting functions

State after the change from the Stop state to the Run state		System behaviour	
Input ESPE	**State of the muting sensors**	**Run**	**Next action**
High (e.g., no object in the protective field)	All muting sensors are Low	A normal muting sequence is possible.	Muting is possible after correct activation/sequence of the muting sensors.
	The muting condition is partially fulfilled.		All muting sensors have to return to Low, before the OSSDs of the sensor become Low. If the OSSDs of the sensors become Low before all muting sensors have become Low, Override has to be used.
	The muting condition is fulfilled.		
Low (e.g., object detected)	All muting sensors are Low	Muting is blocked.	The sensor OSSDs have to become High before muting can take place.
	The muting condition is partially fulfilled.	Override is required, if configured.	Either transition to normal behaviour (in case of a cyclically correct sequence of sensor states) or the total override time is exceeded.
	The muting condition is fulfilled.		

9.10.5 Error states and information on resetting

Table 101: Error states and information on resetting for Muting function blocks

Diagnostic outputs	Resetting the error state	Remarks
Muting error: • Error in the concurrency monitoring function • Error in the total muting time monitoring • Error in the direction detection • Sequence error detected • Error in the sensor gap monitoring	A complete valid muting cycle has to occur before any muting error can be reset. To this purpose either Override has to be used or all muting sensors and OSSDs of the ESPE have to be clear and a subsequent valid muting sequence has to be applied. If one of these two conditions is fulfilled, the Muting error output returns to Low, provided that no other error exists.	The Enable output changes to Low and Fault present changes to High, if the Muting error output is High.

9.10.6 Parallel muting

Function block diagram

Figure 201:
Function block diagram for the Parallel muting function block

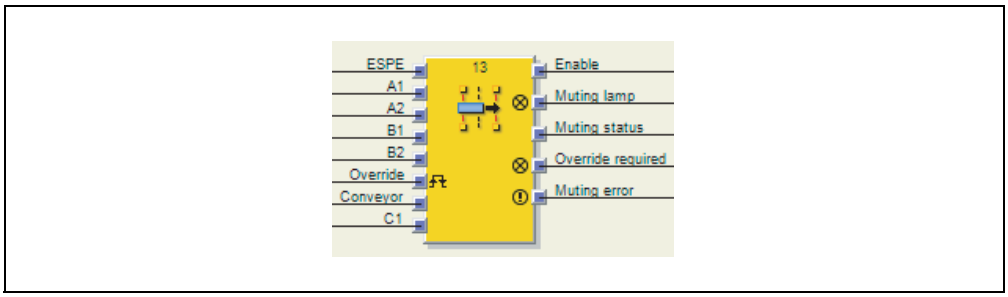

Representation of the application

Figure 202 shows an example of the placement of sensors for Parallel muting.

Figure 202:
Muting with two parallel sensor pairs

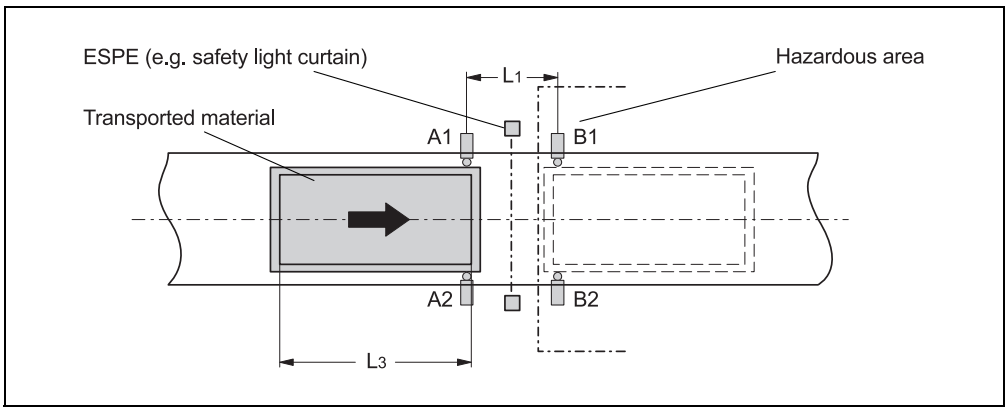

In this example the material moves from the left to the right. As soon as the first muting sensor pair A1 & A2 is activated, the protective effect of the protective device (ESPE) is muted. The protective effect remains muted until the muting sensor pair B1 & B2 is clear again.

Input conditions for muting sensors

Table 102:
Conditions for Parallel muting

Condition	Description
A1 & A2 (or B1 & B2)	Starts the muting cycle. The first sensor pair is activated depending on the direction of transportation of the material.
A1 & A2 & B1 & B2	Condition for transferring the muting function to the second sensor pair.
B1 & B2 (or A1 & A2)	Muting applies as long as this condition is fulfilled. The second sensor pair is activated depending on the direction of transportation of the material.

Equations and prerequisites for calculating the distance:

$L_1 \geq v \times 2 \times T_{IN\ Muting\ sensor}$

$v \times t > L_1 + L_3$

$L_1 < L_3$

$T_{IN\ Light\ curtain} < T_{IN\ Muting\ sensor}$

Where …

L_1 = Distance between the sensors (layout symmetrical to the detection area of the ESPE)

L_3 = Length of material in conveyor direction

v = Velocity of the material (e.g. of the conveyor belt)

t = Set total muting time [s]

$T_{IN\ Light\ curtain}$, $T_{IN\ Muting\ sensor}$ = Response time of the light curtain or the muting sensors in the MELSEC-WS safety controller (See the Safety Controller User's Manual.)

Note

- The material can be moved in both directions or a fixed direction of transportation can be defined for it as follows:
  - With the optional input **C1**. If used, the **C1** input always has to be activated before both muting sensors of the first sensor pair (e.g. A1 and A2) become High.
  - By means of the **Direction detection** configuration parameter
- In parallel layout, the position of the muting sensors also determines the width of the permissible object. The objects always have to pass the muting sensors with an identical width.
- Optical probes and all types of non-optical sensors can be used for this application. Use sensors and probes with background suppression.
- Avoid mutual interference of the sensors.
- Increase the protection against manipulation and the safety level by using the following configurable functions:
  - concurrency monitoring
  - monitoring of the total muting time
  - muting end via ESPE
- Information on wiring can be found in Section 9.10.3.

The function block requires that a valid muting sequence takes place. Figure 203 shows an example of a valid muting sequence based on the basic parameter setting for this function block.

Sequence/timing diagram

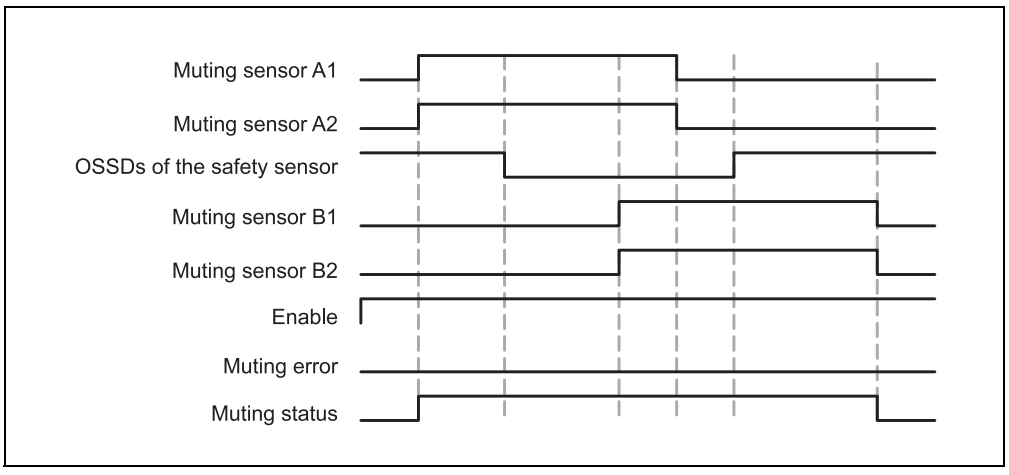

Figure 203:
Valid muting sequence using the configuration basic setting (C1 input: without, Override input: without, Conveyor input: without)

9.10.7 Sequential muting

Function block diagram

Figure 204:
Function block diagram for the Sequential muting function block

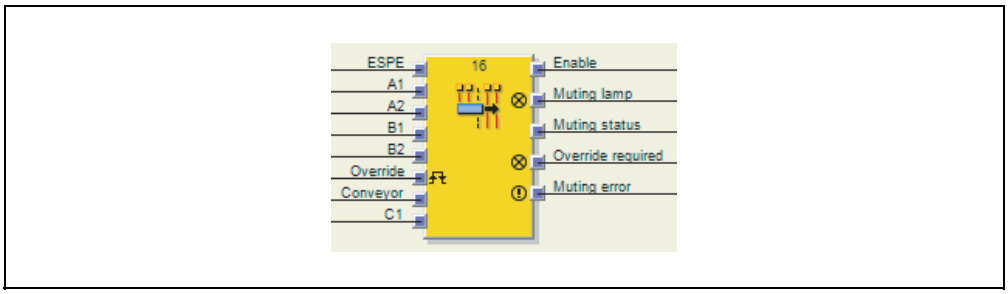

Representation of the application

Figure 205 shows an example of the placement of sensors using the Sequential muting function block.

Figure 205:
Example of the sequential layout of muting sensors

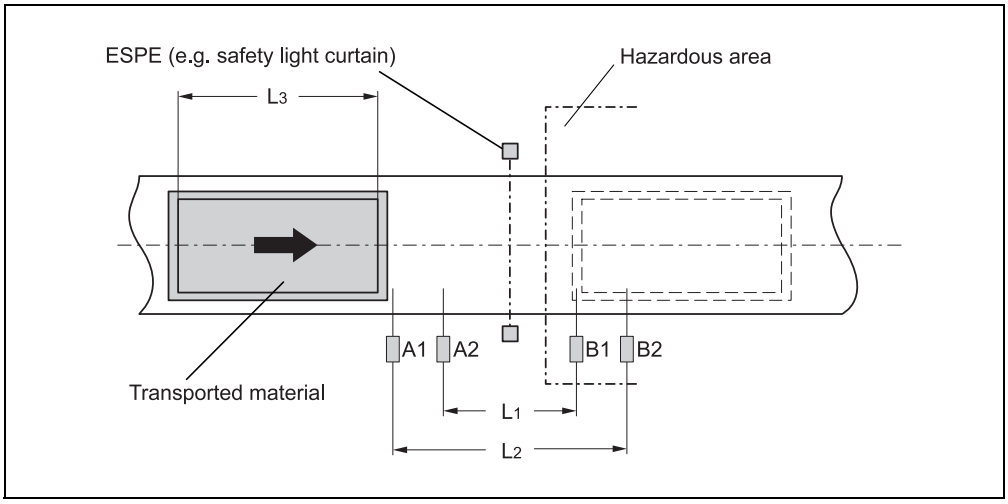

In the example, the material moves from the left to the right. As soon as the muting sensors A1 & A2 are activated, the protective effect of the protective device (ESPE) is muted. The protective effect remains muted until a sensor of the muting sensor pair B1 & B2 becomes clear again.

Input conditions for muting sensors

Table 103:
Conditions for Sequential muting with four sensors

Condition	Description
A1 & A2 (or B1 & B2)	Starts the muting cycle. The first sensor pair is activated depending on the direction of transportation of the material.
A1 & A2 & B2 & B1	Condition for transferring the muting function to the second sensor pair.
B1 & B2 (or A1 & A2)	Muting applies as long as this condition is fulfilled. The second sensor pair is activated depending on the direction of transportation of the material.

Equations and prerequisites for calculating the distance:

$L_1 \geq v \times 2 \times T_{IN\ Muting\ sensor}$

$v \times t > L_1 + L_3$

$L_2 < L_3$

$T_{IN\ Light\ curtain} < T_{IN\ Muting\ sensor}$

Where …

L_1 = Distance between the inner sensors (layout symmetrical to the detection area of the ESPE)

L_2 = Distance between the outer sensors (layout symmetrical to the detection area of the ESPE)

L_3 = Length of the material in conveyor direction

v = Velocity of the material (e.g. of the conveyor belt)

t = Set total muting time [s]

$T_{IN\ Light\ curtain}$, $T_{IN\ Muting\ sensor}$ = Response time of the light curtain or the muting sensors in the MELSEC-WS safety controller (See the Safety Controller User's Manual.)

Note

- In this example the material can either be moved in both directions or a fixed direction of transportation can be defined as follows:
  - With the optional input **C1**. If used, the **C1** input always has to be activated before both muting sensors of the first sensor pair (e.g. A1 and A2) become High.
  - By means of the **Direction detection** configuration parameter
- The sensor layout shown in this example is suitable for all types of sensors.
- Avoid mutual interference of the sensors.
- Increase the protection against manipulation and the safety level by using the following configurable functions:
  - concurrency monitoring
  - monitoring of the total muting time
  - muting end via ESPE
  - sequence monitoring
- Information on wiring can be found in Section 9.10.3.

Sequence/timing diagram

The function block requires that a valid muting sequence takes place. Figure 206 shows an example of a valid muting sequence based on the basic parameter setting for this function block.

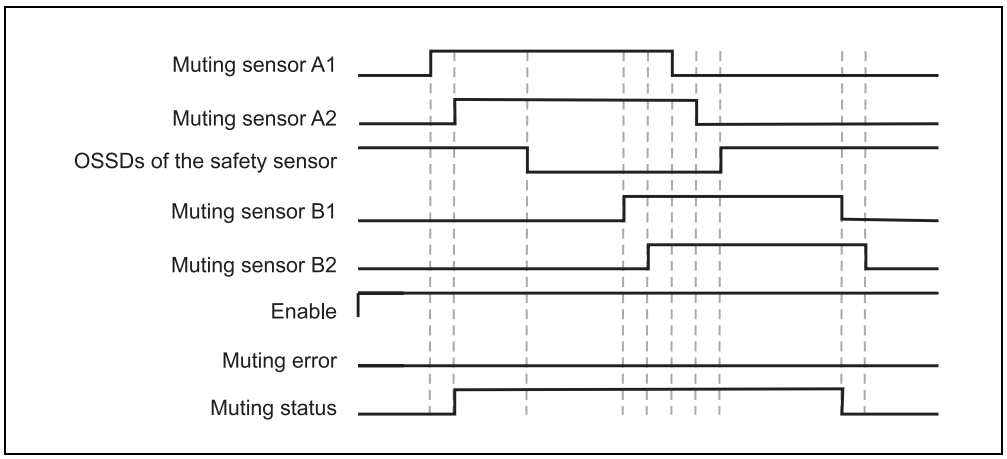

Figure 206:
Valid muting sequence using the basic configuration setting (C1 input: without, Override input: without, Conveyor input: without)

9.10.8 Cross muting – direction of movement only forwards or backwards

Function block diagram

Figure 207:
Function block diagram for the Cross muting function block with optional input C1

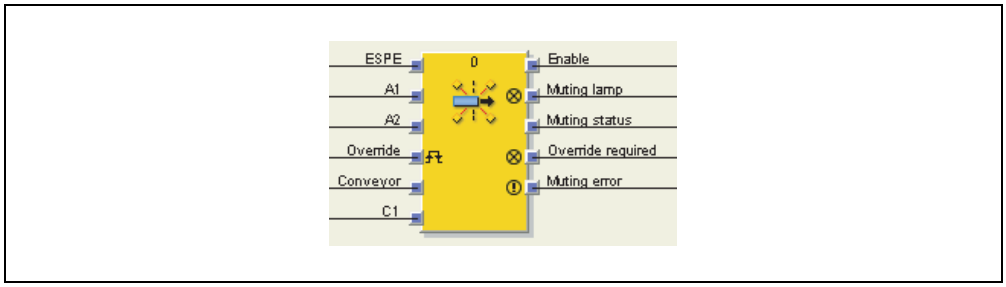

Representation of the application

Figure 208 shows an example of the sensor layout for the Cross muting function block. The optional input **C1** is used as an additional protection for the muting system against manipulation.

Figure 208:
Example of Cross muting with optional input C1

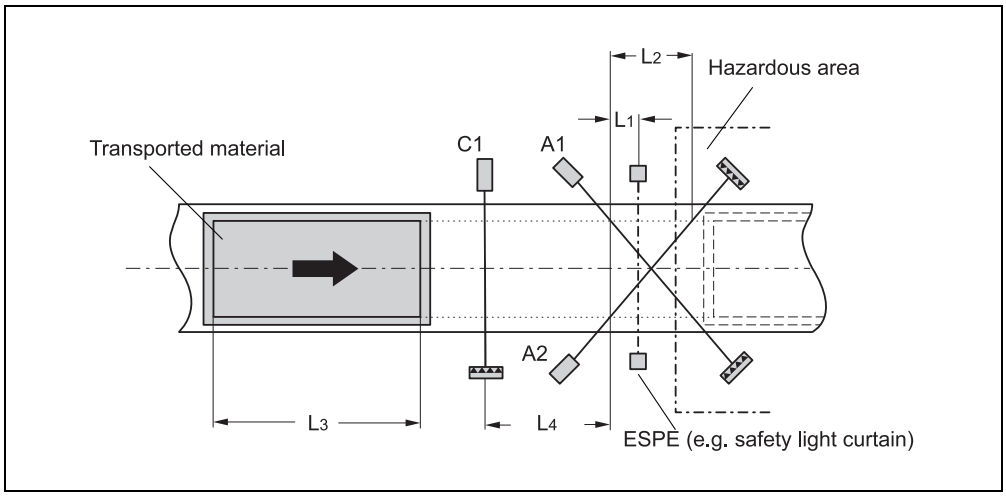

The protective effect of the protective device is muted when the muting sensors are operated in a defined sequence. The optional input C1 always has to be activated before **both** muting sensors of the first sensor pair (e.g. A1 and A2) become High.

Input conditions for muting sensors

Table 104:
Conditions for Cross muting with optional input C1

Condition	Description
C1 & A1 & A2	Input C1 always has to be activated before both muting sensors of the first sensor pair (e.g. A1 and A2) become High.
A1 & A2	Muting applies as long as this condition is fulfilled and the requirement mentioned above existed.

Equations and prerequisites for calculating the distance:

$L_1 \geq v \times T_{IN\ Muting\ sensor}$

$v \times t > L_2 + L_3$

$L_3 > L_4$

$T_{IN\ Light\ curtain} < T_{IN\ Muting\ sensor}$

Where …

L_1 = Minimum distance between the detection line of the ESPE and the detection by A1, A2

L_2 = Distance between the two detection lines of the sensors (sensors activated/sensors clear)

L_3 = Length of material in conveyor direction

L_4 = Maximum distance between C1 and the detection line of A1, A2

v = Velocity of the material (e.g. of the conveyor belt)

t = Set total muting time [s]

$T_{IN\ Light\ curtain}$, $T_{IN\ Muting\ sensor}$ = Response time of the light curtain or the muting sensors in the MELSEC-WS safety controller (See the Safety Controller User's Manual.)

Note

- Material flow is only possible in one direction in this example.
- In order to move material in both directions (i.e. bidirectionally), place the intersection directly in the light beams of the ESPE (See also Section 9.10.9).
- The sensor layout shown in this example is suitable for both through-beam photoelectric switches and photoelectric reflex switches.
- Avoid mutual interference of the sensors.
- Increase the protection against manipulation and the safety level by using the following configurable functions:
  - concurrency monitoring
  - monitoring of the total muting time
  - muting end via ESPE
- Information on wiring can be found in Section 9.10.3.

Sequence/timing diagram

The function block requires that a valid muting sequence takes place. Figure 209 shows an example of a valid muting sequence based on the basic parameter setting for this function block. The optional input **C1** is not contained in the sequence shown below.

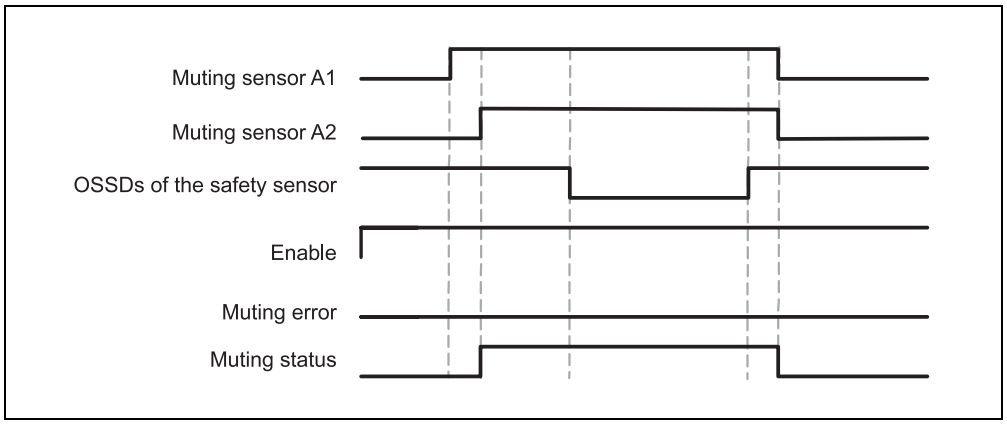

Figure 209:
Valid muting sequence using the configuration basic setting (C1 input: without, Override input: without, Conveyor input: without)

9.10.9 Cross muting – material transport in both directions

Function block diagram

Figure 210:
Function block diagram for the Cross muting function block

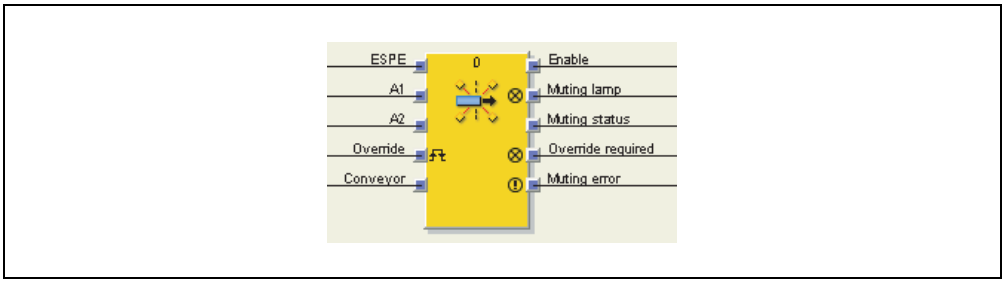

Representation of the application

The sensors can be located as follows in the case of muting applications with one crossed sensor pair where the material has to be moved in both directions. The optional signal **C1** is not used in this application example.

ATTENTION

Ensure that the muting sensors detect only the moved material!

Ensure that the muting sensors are positioned in such a manner that no one can enter the hazardous area by fulfilling the muting conditions (meaning that they activate both muting sensors and thus create the required conditions for muting).

Figure 211:
Cross muting for bidirectional movement of material

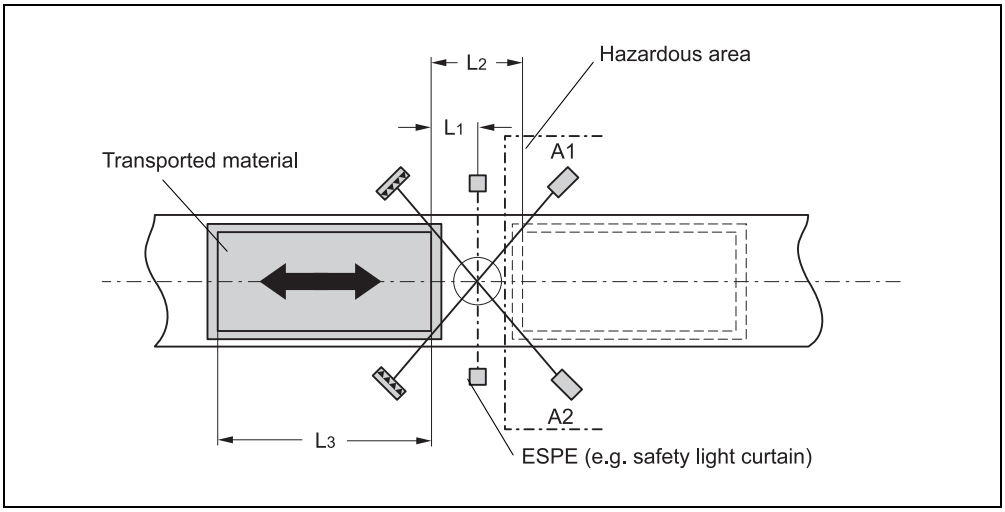

Input conditions for muting sensors

Table 105:
Conditions for Cross muting without optional input C1

Condition	Description
A1 & A2	Muting applies as long as this condition is fulfilled and, furthermore, the requirements mentioned above existed.

Equations and prerequisites for calculating the distance:

$L_1 \geq v \times T_{IN\ Muting\ sensor}$

$v \times t > L_2 + L_3$

$T_{IN\ Light\ curtain} < T_{IN\ Muting\ sensor}$

Where …

L_1 = Minimum distance between the detection line of the ESPE and the detection by A1, A2

L_2 = Distance between the two detection lines of the sensors (sensors activated/sensors clear)

L_3 = Length of material in conveyor direction

v = Velocity of the material (e.g. of the conveyor belt)

t = Set total muting time [s]

$T_{IN\ Light\ curtain}$, $T_{IN\ Muting\ sensor}$ = Response time of the light curtain or the muting sensors in the MELSEC-WS safety controller (See the Safety Controller User's Manual.)

Note

- Material flow is possible in both directions in this example.
- In order for material to be moved in both directions, place the intersection of the muting sensors exactly in the course of the light beams of the ESPE.
- In order to move material in one direction only, place the intersection, with regard to the direction of the transport, behind the light beams of the ESPE (see Section 9.10.8).
- The sensor layout shown in this example is suitable for both through-beam photoelectric switches and photoelectric reflex switches.
- Avoid mutual interference of the sensors.
- Increase the protection against manipulation and the safety level by using the following configurable functions:
  - concurrency monitoring
  - monitoring of the total muting time
  - muting end via ESPE
- Information on wiring can be found in Section 9.10.3.

Sequence/timing diagram

The function block requires that a valid muting sequence takes place. Figure 212 shows an example of a valid muting sequence based on the basic parameter setting for this function block.

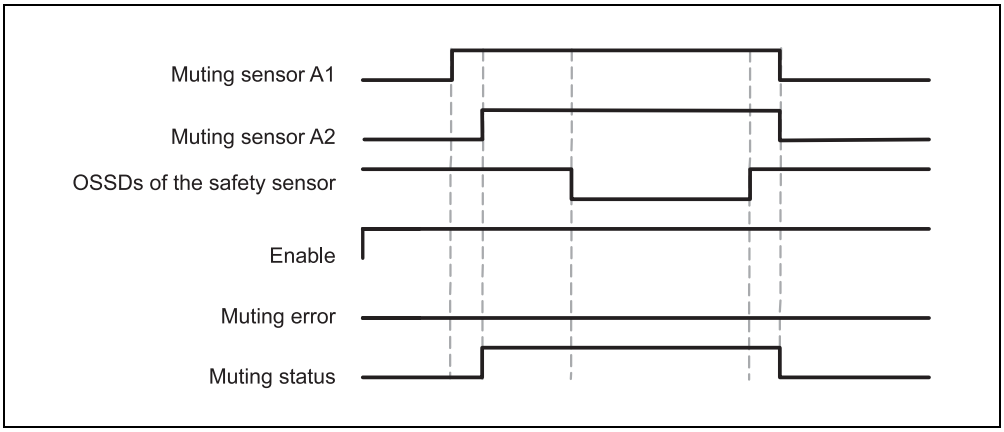

Figure 212:
Valid muting sequence using the basic configuration setting (C1 input: without, Override input: without, Conveyor input: without)

9.11 Function blocks for press contact monitoring

9.11.1 Overview and general description

For press applications there are two complementary types of function blocks offered. This section describes the contact monitoring function blocks, which provide signals for the press cycle control function blocks.

There are two different function blocks for press contact monitoring which can be used to monitor the correct cam signal sequence and the correct stopping (overrun) of the press. The outputs of these function blocks indicate the current press cycle phase in which the press is operating (e.g. upstroke or top). Typically the **Enable** output, **Top** output and **Upstroke** output of a contact monitoring function block are connected to the corresponding inputs of one or more press cycle control function blocks.

Table 106: Overview of the press contact monitoring function blocks

	Eccentric press	Universal press
Typical press types	Eccentric press	Eccentric press Hydraulic press
Press travelling directions	Forward	Forward and backward
Cams	Overrun cam Upstroke cam Dynamic cam	Top dead center (TDC) Bottom dead center (BDC) Overrun cam
Top position condition	When Overrun cam = High	When TDC = Low
Upstroke condition	When Upstroke cam = High	When BDC = High
Overrun monitoring	Optional	Optional
Disable monitoring	Optional	Optional

9.11.2 Eccentric press contact

Function block diagram

Figure 213: Function block diagram for the Eccentric press contact function block

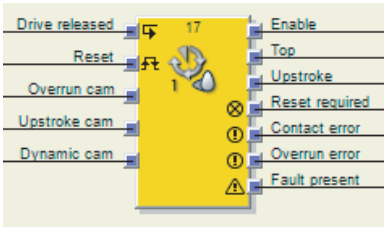

General description

The Eccentric press contact function block can be used for specific types of eccentric presses (i.e. mechanical presses). The minimum configuration requires an **Overrun cam** and the **Upstroke cam**. Optionally a **Dynamic cam** can also be connected.

Parameters of the function block

Table 107: Parameters of the Eccentric press contact function block

Parameter	Possible values
Dynamic cam input	• With • Without
Min. reset pulse time	• 100 ms • 350 ms
Reset input	• With • Without
Disable monitoring input	• With • Without
Use fault present	• With • Without

Enable output

The **Enable** output is used to stop the press and is connected to another complementary press function block, e.g. Press setup or Press single stroke. If no error was detected, the **Enable** output is High.

If any error in the contact signal sequence is detected, the **Enable** output changes to Low, the corresponding error output changes to High and the **Reset required** output changes to High. A valid reset sequence at the **Reset** input is then required.

The **Enable** output also changes to Low if Monitoring gets disabled.

Reset input

A valid reset sequence at the **Reset** input is a Low-High-Low transition with a minimum pulse duration of 100 ms or 350 ms and maximum 30 s. Shorter and longer pulses are ignored.

ATTENTION

Ensure that the transitions of the signals for resetting fulfill the requirements of the safety standards and regulations!

In case of a short-circuit to High (to 24 V DC) at a physical input, the evaluated signal can have a pulse when the signal is reset due to the short-circuit detection. If such a pulse can result in a dangerous state in the machine, the following points have to be observed:

- Ensure protected cable laying for the signal line (due to cross-circuiting to other signal lines).
- No short-circuit detection, i.e. do not reference to test outputs.

Safety-relevant signals have to conform to standards and regulations to be applied!

Always take the valid national, regional and local regulations and standards into consideration for your application. Type C standards such as EN 692 and EN 693 contain requirements how safety-relevant signals have to be used. For example, the restart signal may have to be protected by suitable means in case of overrun errors (e.g. by a key switch or in a closed control cabinet).

If the **Reset** input is disabled, an error can be reset only by stopping the logic execution, e.g. by a power cycle or by changing the system state from the Run state to the Stop state and back to the Run state with the Setting and Monitoring Tool.

Top output and Upstroke output

The **Top** output is typically used to stop the press and is connected to another complementary press function block, e.g. Press setup or Press single stroke.

The **Upstroke** output is typically connected to another complementary press function block, e.g. Press single stroke or Press Setup. Additionally it can be used to initiate upstroke muting.

This function block sets the **Upstroke** output and the **Top** output based on value changes of the cam inputs. If the function block detects an error, both outputs are set to Low.

Without Dynamic cam

The **Upstroke** output is set to High with a rising edge (transition from Low to High) of the **Upstroke cam** input and is set to Low with a rising edge of the **Overrun cam** input.

The **Top** output is set to High if the **Overrun cam** input is High.

Figure 214:
Press cycle for the Eccentric press contact function block without Dynamic cam

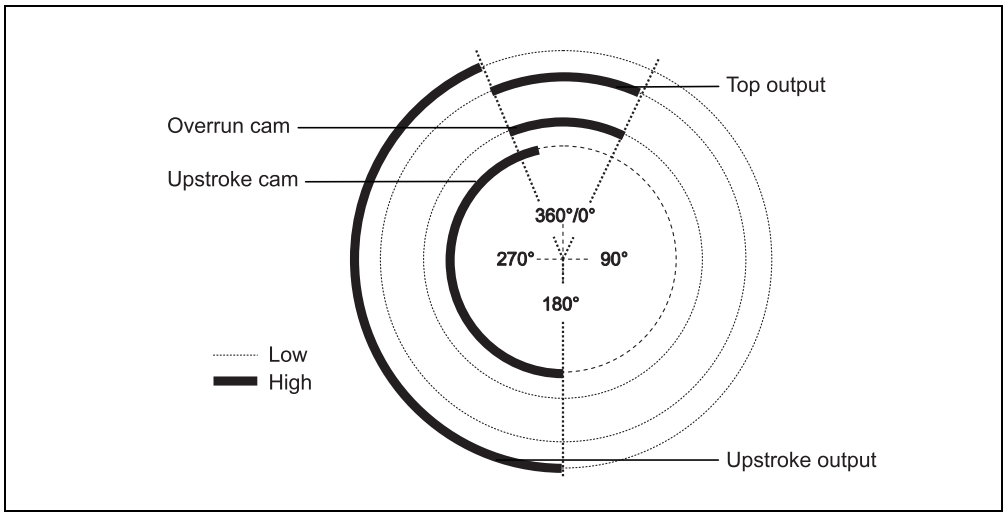

With Dynamic cam

If this function block is configured with **Dynamic cam**, the start of the Top phase can be brought forward with a falling edge (transition from High to Low) of the **Dynamic cam** input.

The **Upstroke** output is set to High with a rising edge (transition from Low to High) of the **Upstroke cam** input. It is set to Low either with a rising edge of the **Overrun cam** input or with a falling edge of the **Dynamic cam** input, whichever occurs first.

The **Top** output is set to High with a rising edge of the **Overrun cam** or with a falling edge of the **Dynamic cam** input, whichever occurs first. The **Top** output is set to Low with a falling edge of the **Overrun cam** input.

Figure 215:
Press cycle for the Eccentric press contact function block with Dynamic cam on upstroke

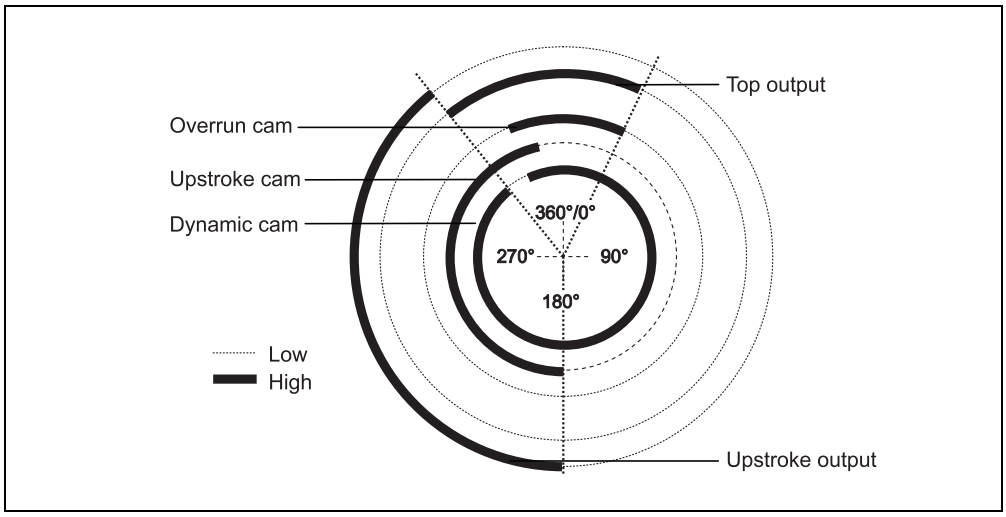

If there is a falling edge of the **Dynamic cam** input when the **Upstroke cam** input is Low, i.e. in the Run-down phase of the press cycle, the **Top** output will be set to High until a rising edge of the **Upstroke cam** input is detected. The **Upstroke** output will remain Low for the rest of the press cycle.

Figure 216:
Press cycle for the Eccentric press contact function block with Dynamic cam on upstroke and downstroke

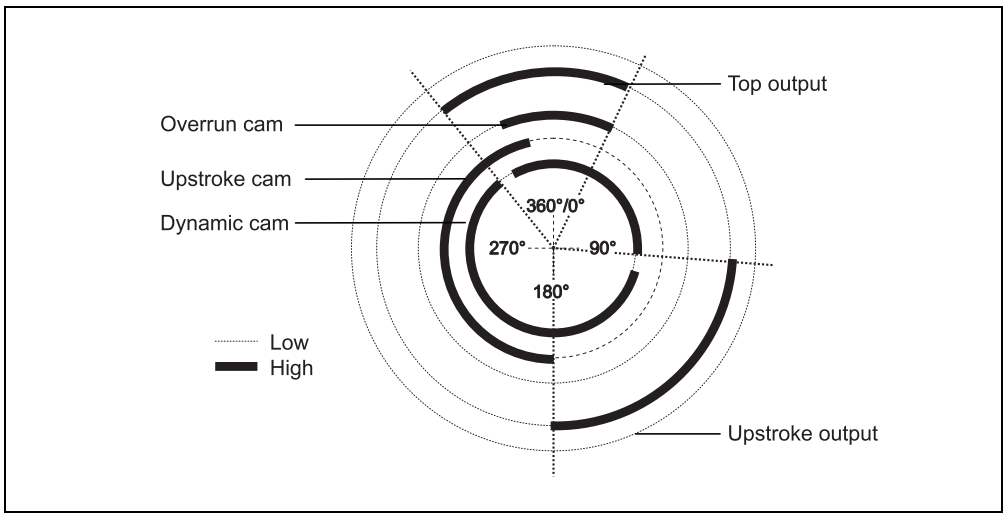

Note If the **Upstroke cam** input is already High when the monitoring of the cam inputs begins (e.g. in the first logic cycle, after resetting an error or after enabling monitoring with **Disable monitoring** input), the **Upstroke** output will remain Low until the first actual transition from Low to High has been detected at the **Upstroke cam** input.

Contact monitoring

The input signals for the **Overrun cam** input, **Upstroke cam** input and the **Drive released** input have to accord with Figure 217 and the following rules.

Figure 217:
Contact monitoring with the Eccentric press contact function block

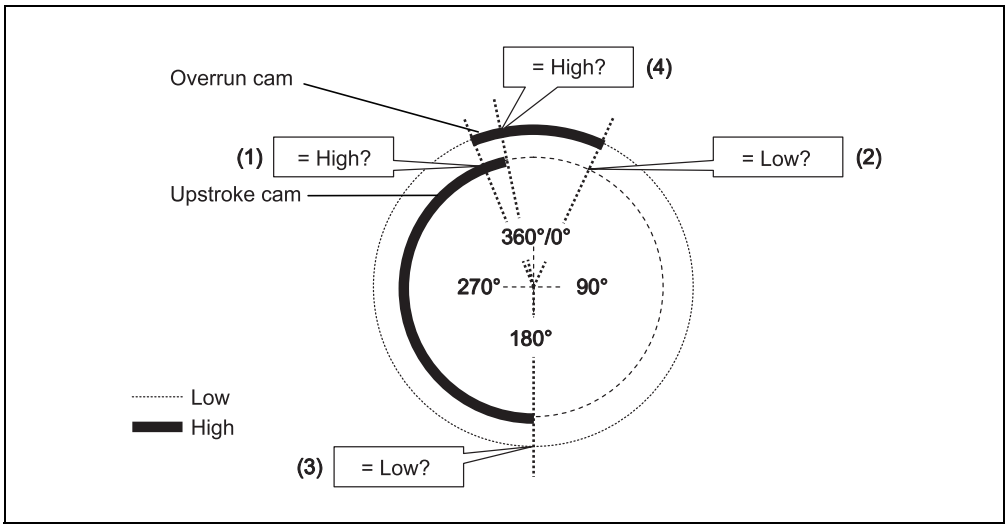

(1) The overrun must begin during the upstroke phase: The rising edge at the **Overrun cam** input (Low-High transition) must occur while the **Upstroke cam** input is High.

(2) The overrun must end after the end of the upstroke phase: The falling edge at the **Overrun cam** input (High-Low transition) must occur when the **Upstroke cam** input is Low.

(3) The upstroke phase must begin after the overrun has ended: The rising edge at the **Upstroke cam** input (Low-High transition) must occur while the **Overrun cam** input is Low.

(4) The upstroke phase must end during the overrun: The falling edge at the **Upstroke cam** input (High-Low transition) must occur while the **Overrun cam** input is High.

If at least one of these conditions is not fulfilled during operation, the **Enable** output becomes Low and the **Contact error** output becomes High.

A valid sequence to fulfill the conditions is as follows:

0) Start condition: **Overrun cam** input = High, **Upstroke cam** input = Low
1) **Overrun cam** input: High → Low
2) **Upstroke cam** input: Low → High
3) **Overrun cam** input: Low → High
4) **Upstroke cam** input: High → Low

ATTENTION

Observe the relevant safety standards and regulations!

All safety related parts of the installation (cabling, connected sensors and actuators, configuration settings) must be according to the relevant safety standards (e.g. IEC 62061 or EN/ISO 13849-1 or Type C standards such as EN 692 and EN 693) and regulations. Only safety-relevant signals may be used in safety-relevant logic. Ensure that the application fulfills all applicable standards and regulations!

This needs to be considered especially for the **Upstroke cam**, if the **Upstroke** output is used for upstroke muting, e.g. in combination with a press cycle control function block.

In order to fulfill the safety standards it may be necessary to use tested switches for the cam input signals, each with different test sources. To use different test sources for the cam signals, the **Overrun cam**, **Upstroke cam** and **Dynamic cam** need to be connected to different WS0-XTDI or WS0-XTIO modules.

Note One WS0-XTDI has two test sources only, even if it has eight test output terminals.

Overrun monitoring

The Eccentric press contact function block monitors the overrunning of the press. If the **Overrun cam** is left although the press is supposed to have stopped, then the function block detects an Overrun error.

The **Drive released** input signal must then accord to Figure 218 and the following rule.

Figure 218:
Overrun monitoring with the Eccentric press contact function block

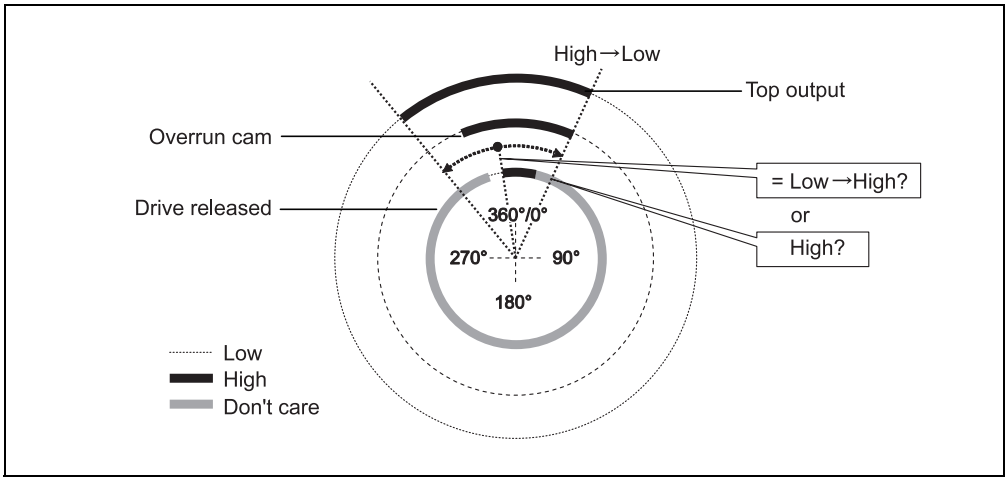

At the **Drive released** input there has to be either a Low to High transition while the **Top** output is High or the **Drive released** input has to be High at the end of the **Overrun cam** (High-Low transition). If none of these two conditions is fulfilled, the **Enable** output becomes Low and the **Overrun error** output becomes High.

The **Drive released** input must be connected to the signal that controls the physical output of the press drive, so that the function block can determine whether the press is currently supposed to be running or has been stopped. Typically this is the **Enable** output of a subsequent Press setup or Press single stroke function block.

Note Do not connect any physical input signals to the **Drive released** input. Connect the signal that controls the physical output for the press drive using a jump address or a CPU marker.

- If a jump address is used, make sure that this signal is a loop-back. This is indicated by a clock icon on the destination tag of the jump address. To this purpose, connect the outputs of this function block to the following function blocks before you connect the jump address to the **Drive released** input. This applies especially if all connections to the following function blocks are also realized using jump addresses.
- If a CPU marker is used, then a Routing function block must be used to split the signal to the physical output for the press drive and to the CPU marker output.

Disable monitoring

Using this optional input it is possible to deactivate the monitoring functionality under certain conditions in order to prevent the function block to go into an error state. This can be useful for certain operating modes, e.g. during the setup of the machine or when the press moves backwards.

If the **Disable monitoring** input is High, the **Enable** output of the Eccentric press contact function block is Low and the monitoring of the cam signal sequence and overrun is inhibited, provided there is no error pending. The error output states are not affected by this.

If the **Disable monitoring** input is High and an error is pending, a reset of the error is possible.

When the **Disable monitoring** input changes from High to Low, the function block behaves in the same way as after a change from the Stop state to the Run state, i.e. the **Enable** output will become High again.

9.11.3 Universal press contact

Function block diagram

Figure 219:
Function block diagram for the Universal press contact function block

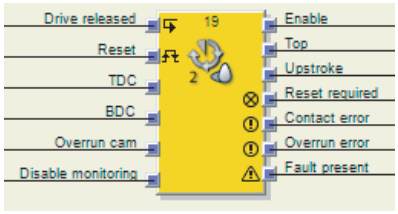

General description

The Universal press contact function block can be used for different press types (e.g. hydraulic presses and eccentric presses (i.e. mechanical presses)). The minimum configuration requires only **TDC** (Top dead center). Optionally, the **BDC** (Bottom dead center) and **Overrun cam** inputs can be connected.

- The **Upstroke** output is available only if the **BDC** input is enabled.
- Overrun monitoring is possible only if the **Overrun cam** input is enabled.
- If **BDC** and **Overrun cam** are not used, a plausibility check is not possible for the function block. In this case, a check for overrunning cannot be carried out. The only remaining function in this case is the provision of the **Top** output signal.

ATTENTION

Do not use this function block for safety purposes without BDC and Overrun cam!

If this function block is used without the **BDC** and **Overrun cam** inputs, then it must be used for automation control only, i.e. not for safety functionality. Otherwise the operator of the press will be in danger.

Parameters of the function block

Table 108: Parameters of the Universal press contact function block

Parameter	Possible values
Overrun cam input	• With • Without
BDC input	• With • Without
Number of BDC signals per cycle	• 1 (e.g. eccentric press) • 0-2 (e.g. hydraulic press)
Min. reset pulse time	• 100 ms • 350 ms
Reset input	• With • Without
Disable monitoring input	• With • Without
Use fault present	• With • Without

Enable output

The **Enable** output is used to stop the press and is connected to another complementary press function block, e.g. Press setup or Press single stroke. If no error was detected, the **Enable** output is High.

If any error in the contact signal sequence is detected, the **Enable** output changes to Low, the corresponding error output changes to High and the **Reset required** output changes to High. A valid reset sequence at the **Reset** input is then required.

The **Enable** output also changes to Low if Monitoring gets disabled.

Reset input

A valid reset sequence at the **Reset** input is a Low-High-Low transition with a minimum pulse duration of 100 ms or 350 ms and maximum 30 s. Shorter and longer pulses are ignored.

ATTENTION

Ensure that the transitions of the signals for resetting fulfill the requirements of the safety standards and regulations!

In case of a short-circuit to High (to 24 V DC) at a physical input, the evaluated signal can have a pulse when the signal is reset due to the short-circuit detection. If such a pulse can result in a dangerous state in the machine, the following points have to be observed:

- Ensure protected cable laying for the signal line (due to cross-circuiting to other signal lines).
- No short-circuit detection, i.e. do not reference to test outputs.

Safety-relevant signals have to conform to standards and regulations to be applied!

Always take the valid national, regional and local regulations and standards into consideration for your application. Type C standards such as EN 692 and EN 693 contain requirements how safety-relevant signals have to be used. For example, the restart signal may have to be protected by suitable means in case of overrun errors (e.g. by a key switch or in a closed control cabinet).

If the **Reset** input is disabled, an error can be reset only by stopping the logic execution, e.g. by a power cycle or by changing the system state from the Run state to the Stop state and back to the Run state with the Setting and Monitoring Tool.

Top output and Upstroke output

The **Top** output is typically used to stop the press and is connected to another complementary press function block, e.g. Press setup or Press single stroke.

The **Upstroke** output is typically connected to another complementary press function block, e.g. Press single stroke or Press Setup. Additionally it can be used to initiate upstroke muting.

This function block sets the **Upstroke** output and the **Top** output based on value changes of the cam inputs. If the function block detects an error, both outputs are set to Low.

The **Top** output is set to High if the **TDC** input is Low. The **Upstroke** output is set to High with a rising edge (transition from Low to High) of the **BDC** input. It is set to Low either with a falling edge of the **TDC** input, or with a falling edge of the **BDC** input, whichever occurs first.

If the function blocks starts (power up, disable → enable) with the **BDC** input High, the **Upstroke** output will remain Low for the first press cycle.

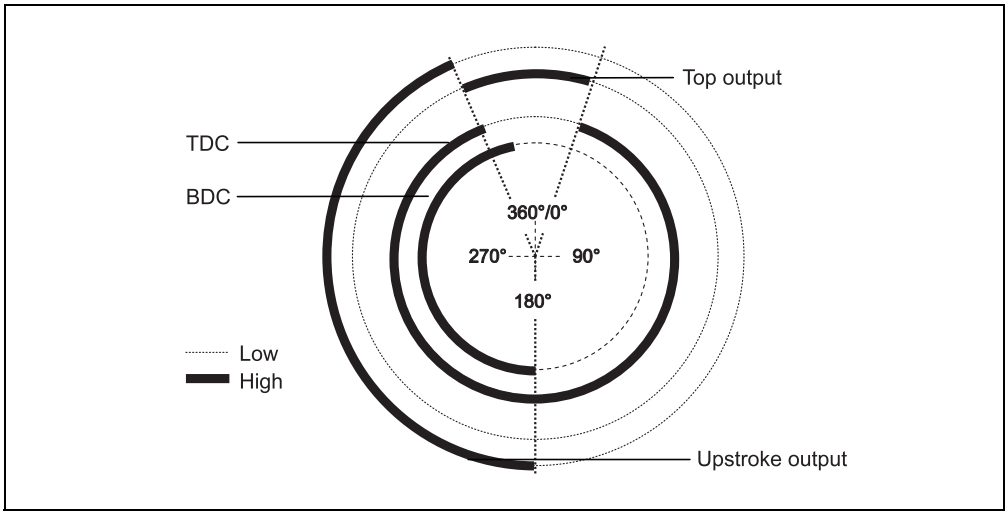

Figure 220:
Press cycle for the Universal press contact function block with falling edge of TDC before BDC

Figure 221:
Press cycle for the Universal press contact function block with falling edge of BDC before TDC

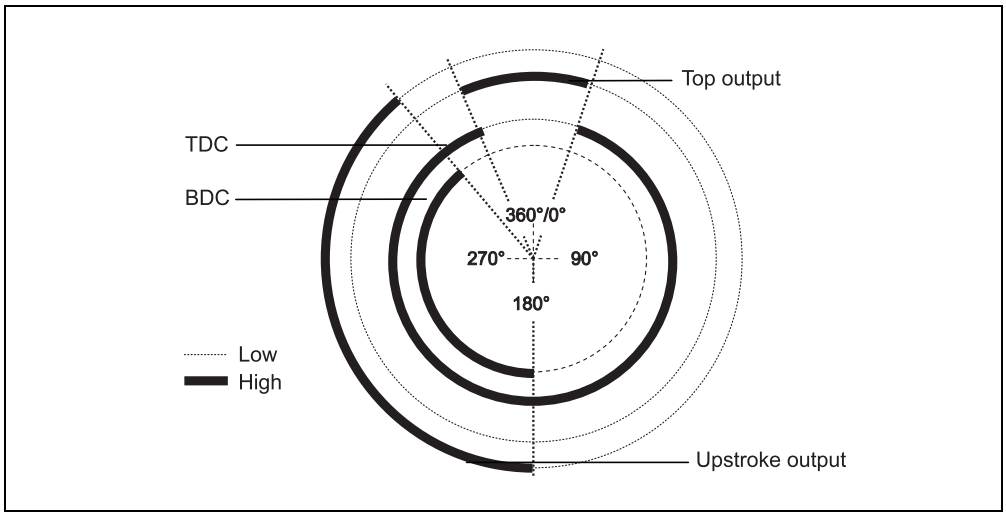

A second rising edge of the **BDC** input does not restart the upstroke phase. This is the case if **Number of BDC signals per cycle** is 0-2 (e.g. hydraulic press), and the press moves back and forth in the bottom section.

Figure 222:
Press cycle for the Universal press contact function block with 2 BDC transitions

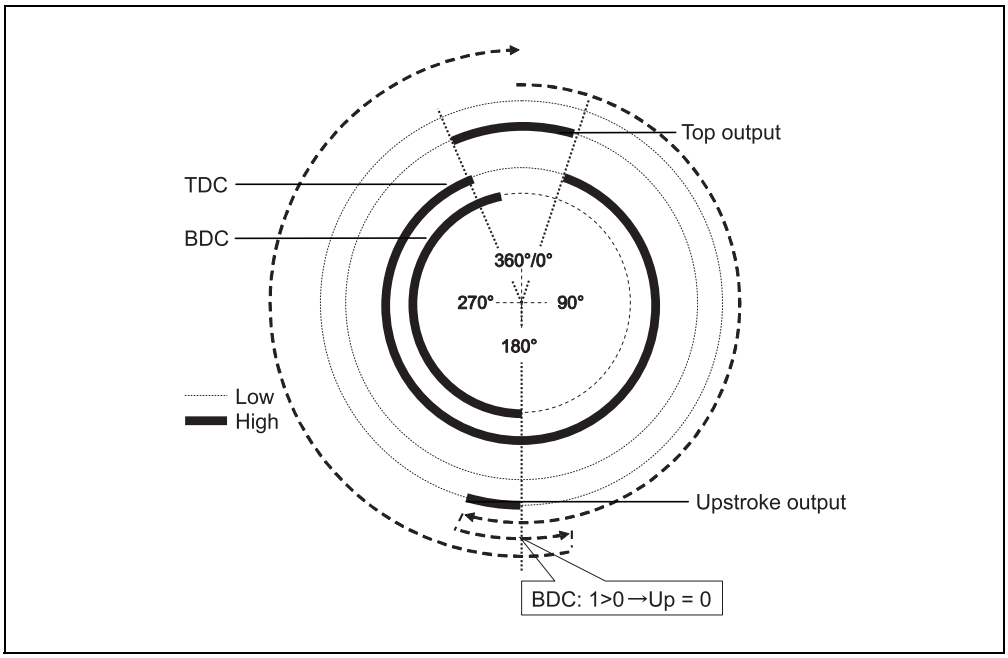

If in this setting no **BDC** pulse at all occurs during the cycle, the **Upstroke** output will remain Low for the complete cycle.

Note If the **BDC** input is already High when the monitoring of the contact inputs begins (e.g. in the first logic cycle, after resetting an error or after enabling monitoring with **Disable monitoring input**), the **Upstroke** output will remain Low during the first cycle. The next **BDC** transition from Low to High is only accepted after a transition from High to Low has occurred at the **Top** output.

TDC monitoring

There must be exactly one **TDC** pulse per cycle. A violation of this rule can be detected only if the **Overrun cam** input is enabled and/or the **BDC** input is enabled and the parameter **Number of BDC signals per cycle** is set to 1 (e.g eccentric press).

Overrun cam monitoring

If Overrun cam is enabled, the **Overrun cam** input signals must accord with Figure 223 and the following rules:

Figure 223:
Contact monitoring with the Universal press contact function block with Overrun cam enabled

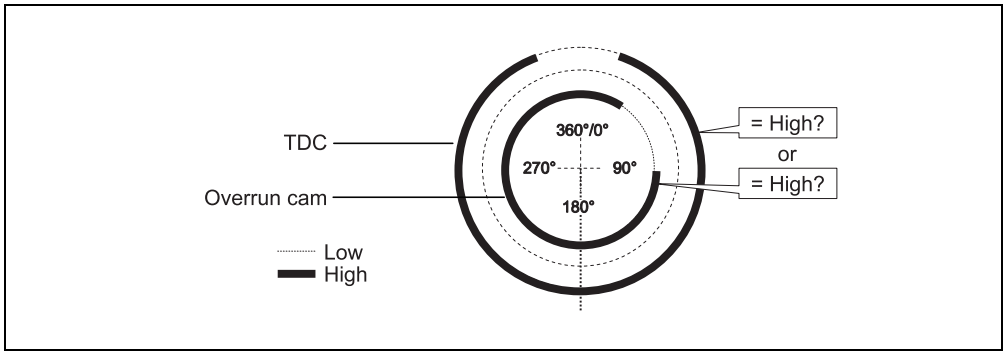

There must be exactly one Overrun cam pulse per cycle. The rising edge of the **Overrun cam** input (Low-High transition) must occur before the falling edge of the **TDC** input. The falling edge of the **Overrun cam** input (High-Low transition) must occur after the rising edge of the **TDC** input. This means that at any time at least one of both inputs must be High.

BDC monitoring

If BDC is enabled and Overrun cam is disabled, the **BDC** input signals must accord with Figure 224 and the following rules.

Figure 224:
Contact monitoring with the Universal press contact function block with BDC enabled

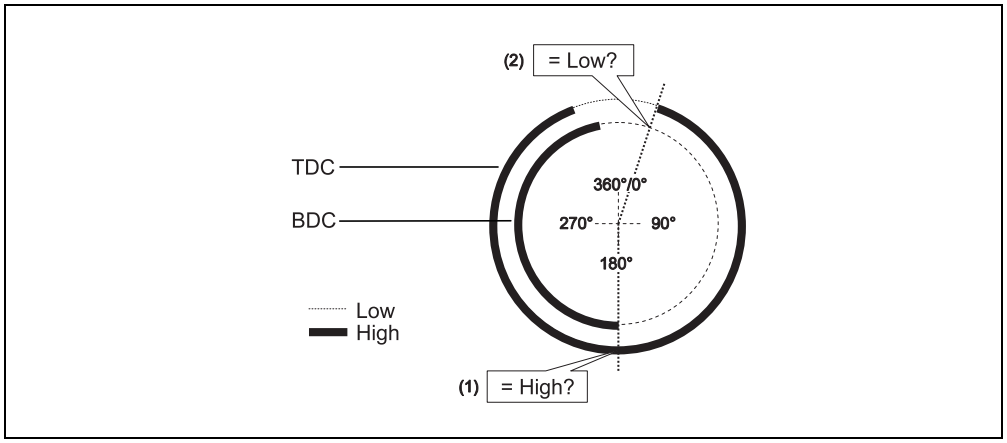

(1) The beginning of the **BDC** (Low-High transition) must be close to 180° and has to occur while the **TDC** input is High.

(2) The end of the **BDC** (High-Low transition) has to occur before the rising edge (Low-High transition) of the **TDC** input. In other words, **BDC** must be Low when a Low-High transition at the **TDC** input occurs.

BDC and Overrun cam monitoring

If BDC and Overrun cam are enabled, the **BDC** input signals must accord with Figure 225 and the following rules.

Figure 225:
Contact monitoring with the Universal press contact function block with BDC enabled

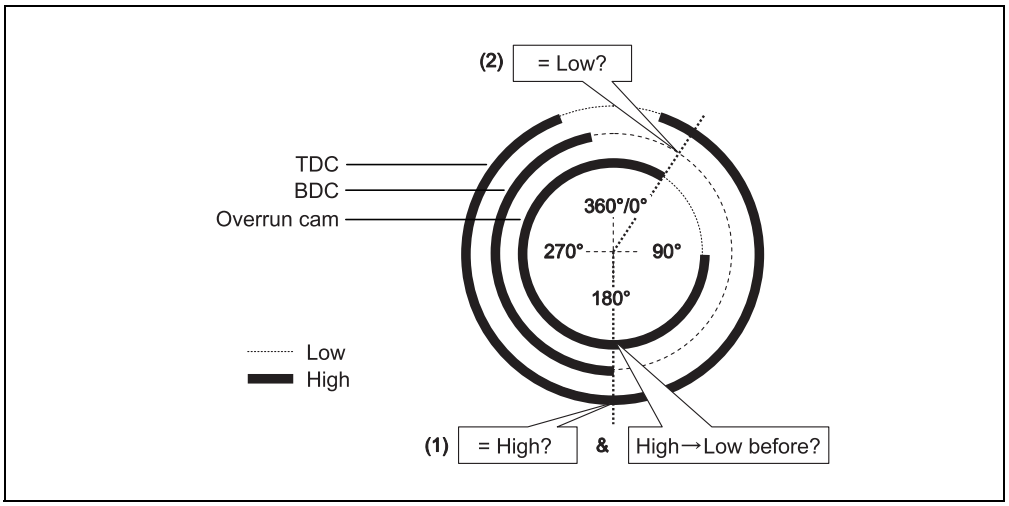

(1) The beginning of the **BDC** (Low-High transition) must be close to 180° and has to occur while the **TDC** input is High and after the falling edge (High-Low transition) of the **Overrun cam** input (the **Overrun cam** input may have changed back to High already).

(2) The end of the **BDC** (High-Low transition) has to occur before the falling edge (High-Low transition) of the **Overrun cam** input. In other words, **BDC** must be Low when a High-Low transition at the **Overrun cam** input occurs.

A valid sequence that fulfills the conditions for BDC and Overrun cam is:

1. Start condition: TDC = Low, BDC = Low, Overrun cam = High
2. TDC: Low → High
3. Drive released = High (this is to fulfill the condition for overrun monitoring)
4. Overrun cam: High → Low
5. BDC: Low → High
6. Overrun cam: Low → High
7. TDC: High → Low and BDC: High → Low (sequence does not matter)

Depending on the type of press (e.g. hydraulic press), it may occur that the beginning of the BDC (step 5 above) occurs not once but twice or even not at all. To avoid that this leads to a contact error, the parameter **Number of BDC signals per cycle** must be set to the value 0-2 (e.g. hydraulic press). With this setting, the conditions for the BDC still apply for every BDC pulse with the exception of the falling edge of the – **Overrun cam** input (step 4 above).

Additionally, the number of BDC signals (Low-High-Low) must be according to the configured value, i.e. either exactly one or any value between 0 and 2.

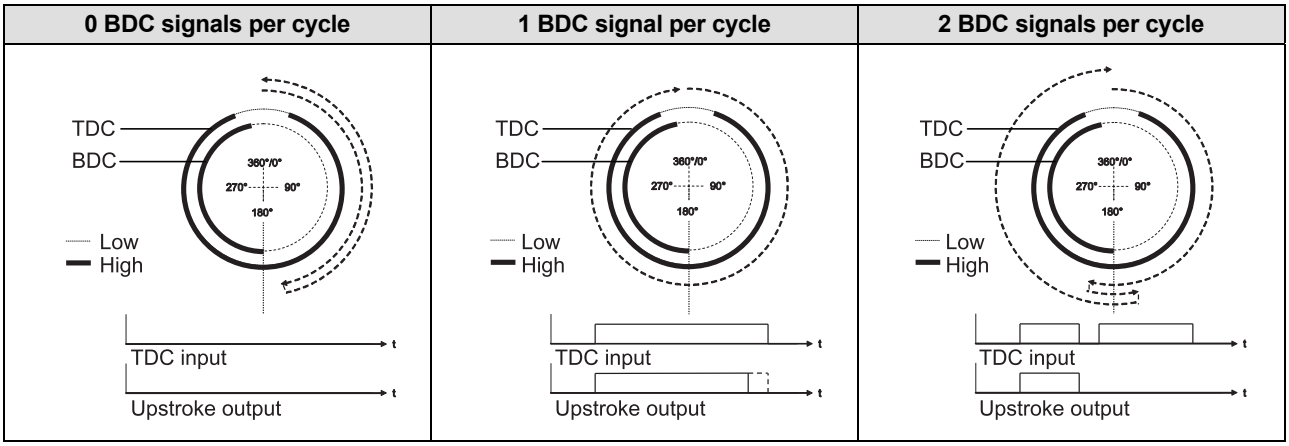

Figure 226:
Timing diagrams for 0, 1 and 2 BDC signals per cycle

If one or more of the conditions mentioned above is not fulfilled during operation, the **Enable** output becomes Low and the **Contact error** output becomes High.

ATTENTION

Observe the relevant safety standards and regulations!

All safety related parts of the installation (cabling, connected sensors and actuators, configuration settings) must be according to the relevant safety standards (e.g. IEC 62061 or EN/ISO 13849-1 or Type C standards such as EN 692 and EN 693) and regulations. Only safety-relevant signals may be used in safety-relevant logic. Ensure that the application fulfills all applicable standards and regulations!

This needs to be considered especially for the **BDC**, if the **Upstroke** output is used for upstroke muting, e.g. in combination with a press cycle control function block.

If the **Number of BDC signals per cycle** is configured to 0-2 (e.g. hydraulic press), the function block's error detection is reduced and not all input errors can be detected (e.g. stuck-at-low at the **BDC** input).

In order to fulfill the safety standards it may be necessary to use tested switches for the cam input signals, each with different test sources. To use different test sources for the cam signals, the **TDC**, **BDC** and **Overrun cam** inputs need to be connected to different WS0-XTDI or WS0-XTIO modules.

Note One WS0-XTDI has 2 test sources only, even if it has eight test output terminals.

Overrun monitoring

If the **Overrun cam** input is enabled, the Universal press contact function block monitors the overrunning of the press, i.e. it checks whether the **Overrun cam** cam is left although the press is expected to have stopped.

The **Drive released** input signal must then accord with Figure 227 and the following rule.

Figure 227:
Overrun monitoring with the Universal press contact function block

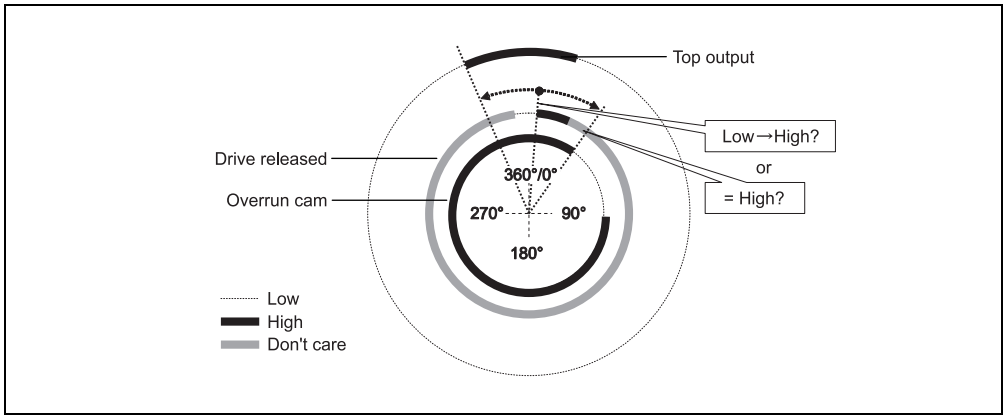

At the **Drive released** input there has to be either a Low to High transition between the Low-High transition of the **Top** output and the end of **Overrun cam** (High-Low transition), or the **Drive released** input has to be High at the end of the **Overrun cam** (High-Low transition). If none of these two conditions is fulfilled, the **Enable** output becomes Low and the **Overrun error** output becomes High.

The **Drive released** input must be connected to the signal that controls the physical output of the press drive, so that the function block can determine whether the press is currently supposed to be running or has been stopped. Typically this is the **Enable** output of a subsequent Press setup or Press single stroke function block.

Note Do not connect any physical input signals to the **Drive released** input. Connect the signal that controls the physical output for the press drive using a jump address or a CPU marker.

- If a jump address is used, make sure that this signal is a loop-back. This is indicated by a clock icon on the destination tag of the jump address. To this purpose, connect the outputs of this function block to the following function blocks before you connect the jump address to the **Drive released** input. This applies especially if all connections to the following function blocks are also realized using jump addresses.
- If a CPU marker is used, then a Routing function block must be used to split the signal to the physical output for the press drive and to the CPU marker output.

Disable monitoring

Using this optional input it is possible to deactivate the monitoring functionality under certain conditions in order to prevent the function block to go into an error state. This can be useful for certain operating modes, e.g. during the setup of the machine or when the press moves backwards.

If the **Disable monitoring** input is High, the **Enable** output of the Universal press contact function block is Low and the monitoring of the cam signal sequence and overrun is inhibited, provided there is no error pending. The error output states are not affected by this.

If the **Disable monitoring** input is High and an error is pending, a reset of the error is possible.

When the **Disable monitoring** input changes from High to Low, the function block behaves in the same way as after a change from the Stop state to the Run state, i.e. the **Enable** output will become High again.

9.12 Function blocks for press cycle control

9.12.1 Press setup

Function block diagram

Figure 228:
Function block diagram for the Press setup function block

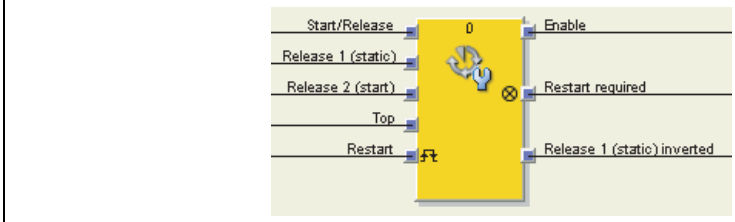

General description

The Press setup function block is generally used together with the Universal press contact or the Eccentric press contact function block in order to set up the press and in order to provide the information of the Top output as input for this function block. The Top output is required for single-stroke operation. Control of the press can, for example, be effected by means of a two-hand control.

Parameters of the function block

Table 109:
Parameters of the Press Setup function block

Parameter	Possible values
Restart interlock	• Without • When Release 1 or Start/Release is Low • When Release 1 is Low or Top changes to High • Always
Release 2 (start) input	• With • Without
Single stroke protection	• With • Without
Min. restart pulse time	• 100 ms • 350 ms

ATTENTION

Ensure that the transitions of the signals for restarting fulfill the requirements of the safety standards and regulations!

In case of a short-circuit to High (to 24 V DC) at a physical input, the evaluated signal can have a pulse when the signal is reset due to the short-circuit detection. If such a pulse can result in a dangerous state in the machine, the following points have to be observed:

- Ensure protected cable laying for the signal line (due to cross-circuiting to other signal lines).
- No short-circuit detection, i.e. do not reference to test outputs.

Input signals of the function block

The Press setup function block supports the following input signals:

Start/Release

The **Start/Release** input signal is used to indicate the beginning and the end of the press movement. A rising edge (Low to High) at the **Start/Release** input signals a start of the press. A Low **Start/Release** input signals a stop of the press. If **Restart interlock** is set to **When Release 1 or Start/Release is Low**, a valid restart sequence is required after a stop that was caused by a Low **Start/Release** input signal.

Release 1 (static)

The input signal **Release 1 (static)** is mandatory. The **Enable** output always changes immediately to Low, if **Release 1 (static)** is Low.

If this function block is used together with a press contact function block (e.g. Eccentric press contact or Universal press contact), the **Enable** output of this press contact function block must be connected with the **Release 1 (static)** input of the Press setup function block.

Release 2 (start)

The input signal **Release 2 (start)** is optional. If **Release 2 (start)** is configured, the **Enable** output can only change to High (e.g. during switching on), if **Release 2 (start)** is High. If the **Enable** output is High, **Release 2 (start)** is no longer monitored.


ATTENTION

Do not use the Release 2 (start) input for safety purposes!

Do not use the **Release 2 (start)** input for initiating safety stops, because this input is evaluated temporarily during the start sequence only. Otherwise the operator of the press will be in danger.

Top

The **Top** input signal is used in order to determine the end of the press cycle (i.e. the press has reached the top dead center). This signal is available at the function blocks Eccentric press contact or Universal press contact. The **Top** input signal is used for single-stroke protection. When the **Single stroke protection** configuration parameter is set to **With**, the **Enable** output changes to Low when the **Top** input changes from Low to High.


ATTENTION

Do not use the Top input for safety purposes!

Connect the **Top** input only with the **Top** output of an Eccentric press contact or Universal press contact function block or to an equivalent signal source. Do not use the **Top** input for initiating safety stops. Otherwise the operator of the press will be in danger.

Restart input

If the **Restart interlock** parameter has been set to **Without**, a Restart signal is not required in order to restart the press after any kind of stop. The **Restart interlock** parameter can also be set to the following values:

- When Release 1 or Start/Release is Low
- When Release 1 is Low or Top changes to High
- Always

This parameter determines when a **Restart** signal is expected as input signal for the function block.

If the **Enable** output changes to Low because of the above-mentioned settings of the configuration parameters for **Restart interlock**, the **Enable** output can only be reset after a valid restart sequence with a Low-High-Low transition (minimum 100 ms or 350 ms; shorter pulses and pulses longer than 30 s will be ignored) has been carried out.

Output signals of the function block

Restart required

The **Restart required** output is High, when a valid restart sequence is expected at the **Restart** input.

Enable

The **Enable** output is High, when **Restart required** is Low (i.e. a restart is not required) and the following conditions are fulfilled:

- When **Single stroke protection** is set to **Without**, **Release 1 (static)** is High, **Release 2 (start)** (if configured) is High and a rising edge (Low to High) is detected at the **Start/Release** input, or
- if **Single stroke protection** is set to **With**, **Start/Release** changes from Low to High, **Release 1 (static)** is High and **Release 2 (start)** (if configured) is High. In this case the **Enable** output changes to Low when the **Top** input changes from Low to High.

Release 1 (static) inverted

The **Release 1 (static) inverted** output signals whether an enable signal for the Press setup function block is present. If **Release 1 (static)** is High, **Release 1 (static) inverted** is Low and vice versa.

Figure 229: Sequence/timing diagram for the Press setup function block

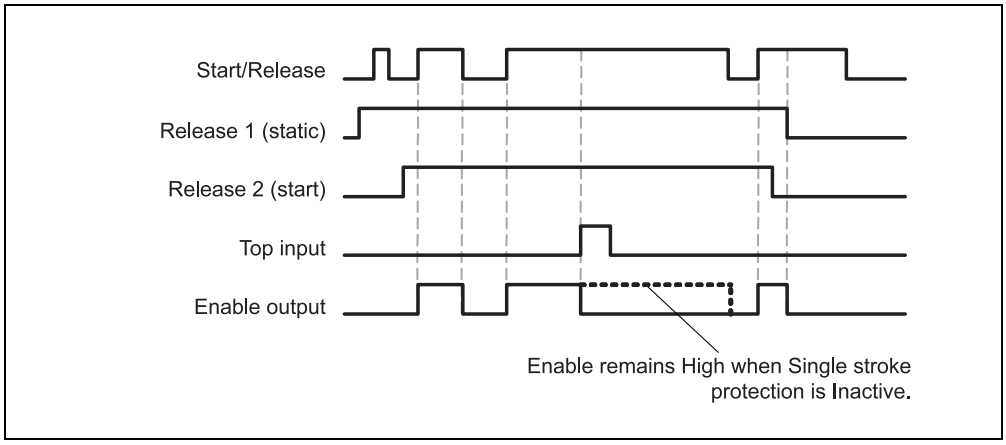

9.12.2 Press single stroke

Function block diagram

Figure 230:
Function block diagram for the Press single stroke function block

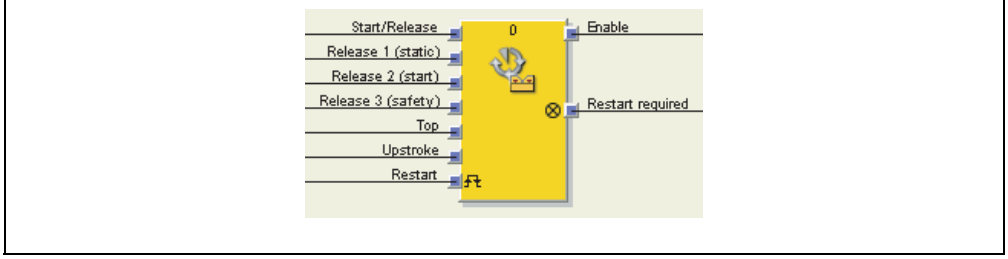

General description

The Press single stroke function block is generally used together with the Universal press contact or the Eccentric press contact function block in order to provide the information of the **Top** and **Upstroke** outputs as input for this function block. The **Top** output is required for single-stroke operation. Controlling of the press can, for example, be implemented by means of a Two-hand control or an N-break function block in connection with a safety light curtain.

Single-stroke protection is always active and cannot be configured. This means: When the signal of the **Top** input changes to High, the **Enable** output is always set to Low. The requirements for a restart depend of the configuration of the parameter for **Restart interlock**.

Parameters of the function block

Table 110:
Parameters of the Press single stroke function block

Parameter	Possible values
Restart interlock	• Without • When Release 1 or Release 3 or Start/Release is Low • When Release 1 or Release 3 is Low, or Top changes to High • Always • When Release 1 or Release 3 is Low
Release 2 (start) input	• With • Without
Release 3 (safety) input	• With • Without
Mode for Start/Release input	• Stepping • Start only
Mode for upstroke muting	• Inactive • For Release 3 • For Release 3 and Start/Release
Max. Up-Stroke muting time	0 = disabled, 1 to 7200 s. The Upstroke input is available only if the value is not set to 0.
Min. restart pulse time	• 100 ms • 350 ms
Ignore Release 3 (safety) for Restart interlock in top position	• Yes • No

ATTENTION

Ensure that the transitions of the signals for restarting fulfill the requirements of the safety standards and regulations!

In case of a short-circuit to High (to 24 V DC) at a physical input, the evaluated signal can have a pulse when the signal is reset due to the short-circuit detection. If such a pulse can result in a dangerous state in the machine, the following points have to be observed:

- Ensure protected cable laying for the signal line (due to cross-circuiting to other signal lines).
- No short-circuit detection, i.e. do not reference to test outputs.

Input parameters and input signals of the function block

The Press single stroke function block supports the following input signals:

Start/Release

The **Start/Release** input signal is used to indicate the beginning and the end of the press movement. A rising edge (Low to High) at the **Start/Release** input signals a start of the press. A Low **Start/Release** input signals a stop of the press. If the **Mode for Start/Release input** parameter is set to **Start only**, the press cannot be stopped by the **Start/Release** input signal.

ATTENTION

Use additional safety measures when Start/Release is set to Start only!

If the **Mode for Start/Release input** parameter is set to **Start only**, you must use additional safety measures (e.g. hazardous point protection with a light curtain). Otherwise the operator of the press will be in danger.

If the **Mode for Start/Release input** parameter is set to **Stepping** and **Restart interlock** is set to **When Release 1 or Release 3 or Start/Release is Low** or **Always**, a valid restart sequence is required after a stop that was caused by a Low **Start/Release** input signal.

The **Enable** output of a Two-hand control or of an N-break function block is particularly suitable for connection to the **Start/Release** input.

Release 1 (static)

The **Release 1 (static)** input signal is mandatory. The **Enable** output always changes immediately to Low, if **Release 1 (static)** is Low.

If this function block is used together with a press contact function block (e.g. Eccentric press contact or Universal press contact), its **Enable** output must be connected with the **Release 1 (static)** input of this function block.

Release 2 (start)

The input signal **Release 2 (start)** is optional. If **Release 2 (start)** is configured, the **Enable** output can only change to High (e.g. during switching on), if **Release 2 (start)** is High. If the **Enable** output is High, **Release 2 (start)** is no longer monitored.

ATTENTION

Do not use the Release 2 (start) input for safety purposes!

Do not use the **Release 2 (start)** input for initiating safety stops, because this input is evaluated temporarily during the start sequence only. Otherwise the operator of the press will be in danger.

Release 3 (safety)

The **Release 3 (safety)** input signal is an optional signal. The **Enable** output can only change from Low to High if **Release 3 (safety)** is High. If **Release 3 (safety)** is Low and **Upstroke** is Low, the **Enable** output is set to Low and a restart sequence has to occur in accordance with the settings.

If **Release 1 (static)** and **Upstroke** are High and the maximum upstroke muting time is configured to a value higher than 0, the **Release 3 (safety)** signal is muted.

Top

The **Top** input signal is used in order to determine the end of the press cycle (i.e. the press has reached the top dead center). This signal is available at the function blocks Eccentric press contact or Universal press contact. The **Top** input signal is used for single-stroke protection. The **Enable** output changes to Low when the **Top** input signal changes from Low to High.

ATTENTION

Do not use the Top input for safety purposes!

Connect the **Top** input only with the **Top** output of an Eccentric press contact or Universal press contact function block or to an equivalent signal source. Do not use the **Top** input for initiating safety stops. Otherwise the operator of the press will be in danger.

Mode for upstroke muting

If the **Max. Up-Stroke muting time** is not set to 0, the **Upstroke** input has to be connected.

Note Connect the **Upstroke** input only with the **Upstroke** output of an Eccentric press contact or a Universal press contact function block.

In this case, the **Release 3 (safety)** and **Start/Release** input signals are muted (muting of the **Start/Release** input depends on the parameter settings) when the **Enable** output is High and the **Upstroke** input is High. This function block does not carry out a plausibility check of the **Upstroke** input signal. If the **Upstroke** input is High several times during a single press cycle, it is possible to mute the corresponding input of the function block several times. If a signal shall not be muted, it should be connected to the **Release 1 (static)** input by means of an AND function block together with other signals that have to be connected to the **Release 1 (static)** input.

ATTENTION

Exclude any danger during the upstroke movement of the press!

If you use upstroke muting, you must ensure that during the upstroke period no hazards are present, e.g. by the up movement itself.

Max. Up-Stroke muting time

The **Max. Up-Stroke muting time** can be configured. This time begins with the rising edge (Low to High) of the signal at the **Upstroke** input. If the timer reaches the configured **Max. Up-Stroke muting time** before a falling edge (High to Low) occurs at the **Upstroke** input, the function block terminates the muting of the **Release 3 (safety)** and **Start/Release** inputs. If from this moment on one of these two inputs becomes Low, the **Enable** output is also set to Low.

Restart input

If the **Restart interlock** parameter has been set to **Without**, a **Restart** signal is not required in order to restart the press after any kind of stop. The **Restart interlock** parameter can also be set to the following values:

- When Release 1 or Release 3 or Start/Release is Low
- When Release 1 or Release 3 is Low or Top changes to High
- Always
- When Release 1 or Release 3 is Low

This parameter determines when a **Restart** signal is expected as input signal for the function block.

If the **Enable** output changes to Low because of the above-mentioned settings of the configuration parameters for the **Restart interlock**, the **Enable** output can only be reset after a valid restart sequence with a Low-High-Low transition (minimum 100 ms or 350 ms; shorter pulses and pulses longer than 30 s will be ignored) has been carried out.

Disable Restart Interlock (for EN3) on Top

The **Disable Restart Interlock (for EN3) on Top** parameter prevents the restart interlock being activated if the **Release 3 (safety)** input changes to Low during a regular stop of the press. This means that if the **Disable Restart Interlock (for EN3) on Top** parameter is configured as **Yes** and the **Enable** output changes to Low as a result of the **Top** input changing to High, then the **Restart required** output will not change to High if the **Release 3 (safety)** input changes to Low as long as the press has not been restarted.

Output signals of the function block

Restart required

The **Restart required** output is High, when a valid restart sequence is expected at the **Restart** input.

Sequence/timing diagrams

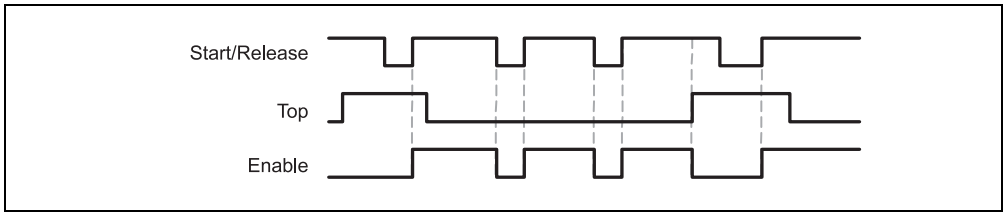

Figure 231: Sequence/timing diagram for the Press single stroke function block when Start/Release is configured in stepping mode

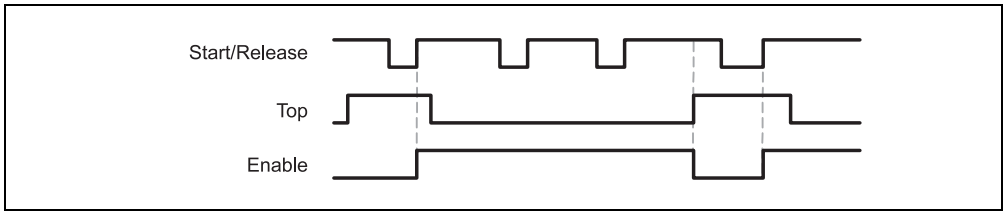

Figure 232: Sequence/timing diagram for the Press single stroke function block when Start/Release is configured in start only mode

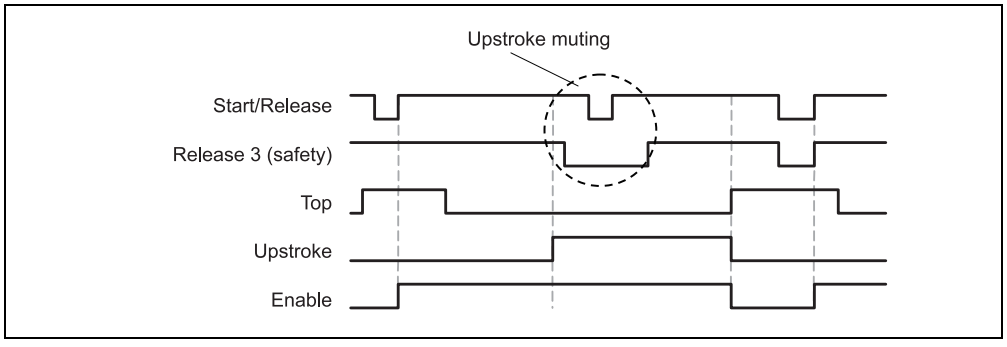

Figure 233: Sequence/timing diagram for the Press single stroke function block with upstroke muting of Start/Release and Release 3 (safety)

9.12.3 Press automatic

Function block diagram

Figure 234:
Function block diagram for the Press automatic function block

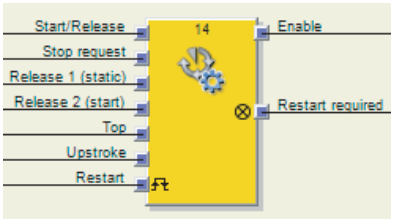

General description

The Press automatic function block is used in connection with press applications in which the workpieces are moved automatically to and from the press, but where occasionally access to the press is required, for example to change a tool.

To this purpose the function block can generate a stop signal for the press (i.e. the **Enable** output changes to Low) in a position in which the tool can be changed easily (e.g. in the top position), when a stop has been requested before.

Parameters of the function block

Table 111:
Parameters of the Press automatic function block

Parameter	Possible values
Restart interlock after stop condition	• With • Without
Stop request	• When Start/Release input is Low • When Stop input is High
Upstroke input	• With • Without
Release 2 (start) input	• With • Without
Min. restart pulse time	• 100 ms • 350 ms

ATTENTION

Ensure that the transitions of the signals for restarting fulfill the requirements of the safety standards and regulations!

In case of a short-circuit to High (to 24 V DC) at a physical input, the evaluated signal can have a pulse when the signal is reset due to the short-circuit detection. If such a pulse can result in a dangerous state in the machine, the following points have to be observed:

- Ensure protected cable laying for the signal line (due to cross-circuiting to other signal lines).
- No short-circuit detection, i.e. do not reference to test outputs.

Input parameters and input signals of the function block

Stop request

The **Stop request** parameter determines the Stop state of the Press automatic function block. If this parameter is configured as **When Start/Release input is Low**, the **Start/Release** input signal is used to control the **Enable** output directly. If configured to **When Stop input is High**, the **Enable** output changes to Low, when the **Stop request** input is High.

In both cases the **Enable** output changes to High, when the following conditions are fulfilled:

- A transition from Low to High occurs at the **Start/Release** input; and
- the **Stop request** input is Low, if it is connected; and
- no other reason is present that would normally trigger a stop signal, e.g. **Release 1 (static)** is Low.



ATTENTION

Do not use the Start/Release and Stop inputs for safety stops!

Independent of the configured stop request mode, the inputs **Start/Release** and **Stop request** must not be used for initiating safety stops. These inputs can only be used for setting automation control stop requests. Signals initiating safety stops (e.g. safety stop) must be connected to the **Release 1 (static)** input of the function block.

Upstroke input

If the **Upstroke input** parameter is configured as **With**, a High signal at the **Upstroke** input allows the press to stop both during the downstroke and in the top position. If this parameter is set to **Without**, regular stops are only possible in the top position.

Note Connect the **Upstroke** input only to the **Upstroke** output of an Eccentric press contact or a Universal press contact function block.

Start/Release

The **Start/Release** input signal is used to provide signals for the beginning and end of the press movement. If a rising edge (Low to High) is detected at the **Start/Release** input, the **Enable** output becomes High, provided that the **Stop request** input is Low and no other reason is present that would normally trigger a stop signal, e.g. **Release 1 (static)** is Low. A valid restart sequence can be required before a signal transition of **Start/Release** if the **Restart interlock after stop condition** parameter is set to **With**. If you connect a command device (e.g. a two-hand control) to the **Start/Release** input, you must ensure that unintentional restarting is not possible.

Stop request

If the **Stop request** parameter is set to **When Stop input is High**, the **Stop request** input is used to signal a stop to the press. When the **Stop request** input is High, the **Enable** output is set to Low.

This input should only be used if the **Stop request** parameter has been set to **When Stop input is High**. The **Stop request** input is not used when the **Stop request**–parameter has been set to **When Start/Release input is Low**. A valid restart sequence can be required before a signal transition of **Start/Release** when the **Restart interlock after stop condition** parameter is set to **With**. The **Stop request** input is designed for the connection of signals that are not safety-relevant (e.g. from a programmable controller). Safety-relevant signals may only be connected to the **Release 1 (static)** input, not to the **Stop request** input.

Release 1 (static)

The input signal **Release 1 (static)** is mandatory. The **Enable** output always changes immediately to Low, if **Release 1 (static)** is Low.

If this function block is used together with a press contact function block (e.g. Eccentric press contact or Universal press contact), its enable signal must be connected with the **Release 1 (static)** input of this function block.

Release 2 (start)

The input signal **Release 2 (start)** is optional. When **Release 2 (start)** is configured, the **Enable** output can only change to High (e.g. during switching on), when **Release 2 (start)** is High. When the **Enable** output is High, **Release 2 (start)** is no longer monitored.

ATTENTION

Do not use the Release 2 (start) input for safety purposes!

Do not use the **Release 2 (start)** input for initiating safety stops, because this input is evaluated temporarily during the start sequence only. Otherwise the operator of the press will be in danger.

Top

The **Top** input signal is used in order to determine the end of the press cycle (i.e. the press has reached the top dead center). This signal is available at the function blocks Eccentric press contact or Universal press contact.

ATTENTION

Do not use the Top input for safety purposes!

Connect the **Top** input only with the **Top** output of an Eccentric press contact or Universal press contact function block or to an equivalent signal source. Do not use the **Top** input for initiating safety stops. Otherwise the operator of the press will be in danger.

Restart input

If the **Restart interlock after stop condition** parameter has been set to **Without**, a **Restart** signal is not required in order to restart the press after any kind of stop.

If the **Restart interlock after stop condition** parameter has been set to **With** and the **Enable** output changes to Low, the **Enable** output can only be reset after a valid restart sequence with a Low-High-Low transition (minimum 100 ms or 350 ms; shorter pulses and pulses longer than 30 s will be ignored) has been carried out.

Output signals of the function block

Restart required

The **Restart required** output is High, when a valid restart sequence is expected at the **Restart** input.

Sequence/timing diagram

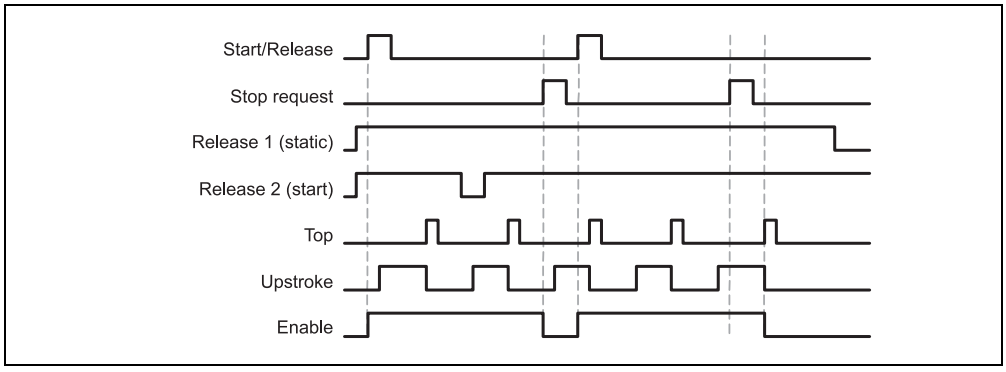

Figure 235: Sequence/timing diagram for the Press automatic function block using the Stop request and Upstroke inputs

9.12.4 N-break (press with N-PSDI mode)

Function block diagram

Figure 236:
Function block diagram for the N-break function block

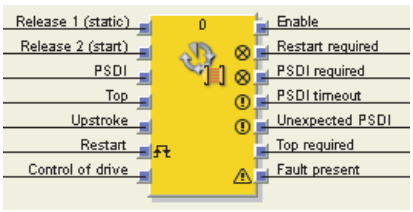

General description

The N-break function block is used for press applications with Presence-Sensing Device Initiation (PSDI) mode.

ATTENTION

Conform to the safety regulations for PSDI mode!

The requirements for PSDI mode are specified in local, regional, national and international standards. Always implement PSDI applications in conformity with these standards and regulations as well as in conformity with your risk analysis and avoidance strategy.

If more than one mode is set up in which the ESPE (e.g. safety light curtain) is not used, the ESPE has to be deactivated in this mode so that it is clear that the ESPE is currently not active in protective operation.

If more than one ESPE (e.g. safety light curtain) is used in an application that uses the N-PSDI functions, only one of the ESPEs may be used to fulfill the requirements for N-PSDI mode.

In conformity with EN 692 and EN 693 for press applications the number of breaks is limited to 1 or 2. Other applications depend on the applicable standards.

Prevent access to hazardous movements!

Press systems with a configuration that would allow a person to enter, to cross through and to leave the protective field of an ESPE are not permitted for PSDI mode.

This function block defines a specific sequence of events that trigger a press cycle. “Breaks” are defined as the transition from High to Low to High of the **PSDI** input signal. In PSDI mode of a press an indirect manual triggering of a press cycle is carried out based on a predefined number of “breaks” in the ESPE. If the ESPE (e.g. safety light curtain) detects that the operating movements of the operator related to the insertion or removal of parts have ended and that the operator has withdrawn all body parts from the protective field of the ESPE, the press may trigger automatically.

The N-break function block can be used in connection with the Universal press contact or Press single stroke function blocks and an input for a safety light curtain. The **Enable** signal of this function block controls, for example, the **Start/Release** input of a Press single stroke function block.

The N-break function block checks whether the start sequence is valid and when the break counter or the function block have to be reset.

Parameters of the function block

Table 112: Parameters of the N-break function block

Parameter	Possible values
Number of breaks	1 to 8
Mode	• Standard • Sweden
Max. Up-Stroke muting time	0 = disabled, 1 to 7200 s. The Upstroke input is available only if the value is not set to 0.
PSDI time monitoring	0 = disabled, 1 to 500 s
Condition for Release 2 (start) input	• Without • Necessary for first start • Necessary for every start
Start of first PSDI pulse (PSDI input Low→High)	• After Top has been reached • After the start of upstroke
Restart interlock	• Always • Deactivation on upstroke (only for PSDI) • Without
Min. restart pulse time	• 100 ms • 350 ms
Start position	• Everywhere • Only on top
Min. break pulse time	• 100 ms • 350 ms
Use fault present	• With • Without

ATTENTION

Ensure that the transitions of the signals for restarting fulfill the requirements!

In case of a short-circuit to High (to 24 V DC) at a physical input, the evaluated signal can have a pulse when the signal is reset due to the short-circuit detection. If such a pulse can result in a dangerous state in the machine, the following points have to be observed:

- Ensure protected cable laying for the signal line (due to cross-circuiting to other signal lines).
- No short-circuit detection, i.e. do not reference to test outputs.

Input parameters and input signals of the function block

Standard or Sweden mode

The **Mode** parameter specifies the complete start sequence for the N-break function block. **Standard** mode requires that the configured number of breaks is carried out, followed by a valid restart sequence.

Sweden mode first requires a valid restart sequence, followed by the configured number of breaks.

Requirements for the start sequence

If the **Enable** output changes to Low because of one of the following conditions, a complete start sequence can be necessary:

- **Release 1 (static)** is Low,
- the **Unexpected PSDI** output is High, while Cycle = 0 and there is no active upstroke muting and no stop at the top dead center,
- in case of a PSDI timeout,
- after the **Control of drive** has been switched on

If the **Unexpected PSDI** output is High and the **Enable** output is Low and the **PSDI** input is also Low and **Restart interlock** is set to **Without**, a restart is possible without a complete restart sequence. This can also apply during the press upstroke if **Restart interlock** is set to **Always**.

The minimum break time at the **PSDI** input is 100 ms or 350 ms. Shorter breaks are not evaluated as valid, i.e. they are ignored. If the **Condition for Release 2 (start) input** is configured as **Necessary for first start** or as **Necessary for every start**, the **Release 2 (start)** input also must be High if a complete start sequence is required.

Figure 237: Sequence/timing diagram for a complete start sequence in Standard mode in two-cycle mode

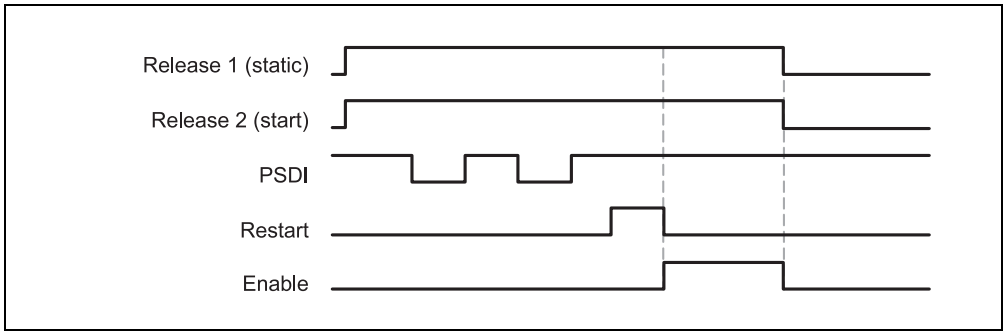

Figure 238: Sequence/timing diagram for a complete start sequence in Sweden mode in two-cycle mode

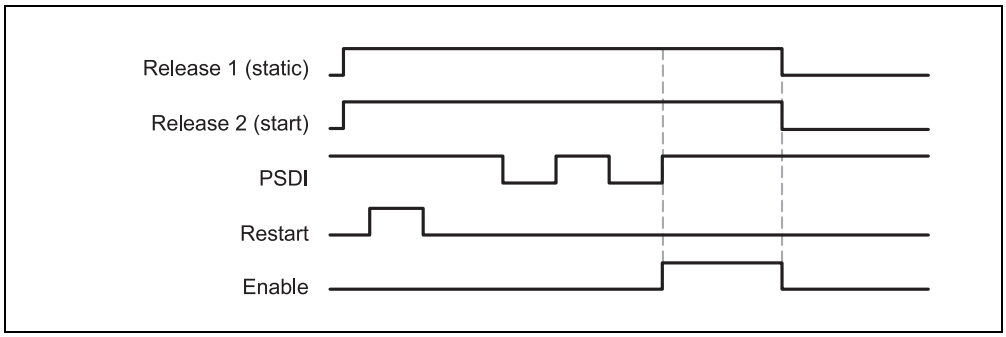

After the initial complete start sequence has been executed and the press has completed a press cycle, the **Top** input must indicate that the press has currently reached the top dead center. This is indicated by a rising edge (Low to High) of the **Top** input. When this happens, the internal break counter is reset.

A cycle start sequence is required in order to trigger a subsequent cycle. In this case, the **Enable** output is set to High when the configured number of breaks has occurred and the remaining configured conditions have been fulfilled (e.g., **Condition for Release 2 (start) input** can be configured as **Necessary for every start**).

PSDI time monitoring

The **PSDI time monitoring** parameter specifies the required time both for a complete start sequence and for a cycle start sequence. If the **PSDI time monitoring** is exceeded, the **PSDI timeout** output changes to High. In this case, a complete start sequence is necessary so that the **Enable** output can return to High (e.g. in order to start the press). The PSDI timer starts when the press is stopped at the top dead center (i.e. the **Top** input changes from Low to High) and after all other stop conditions have been fulfilled.

The basic setting for the **PSDI time monitoring** is 30 s in accordance with the maximum PSDI time allowed for eccentric presses (defined in EN 692). If the **PSDI time monitoring** is set to 0, PSDI time monitoring is disabled.

Start of first PSDI pulse (PSDI input Low→High)

The **Start of first PSDI pulse (PSDI input Low→High)** parameter determines under which circumstances a break is regarded as valid.

If the **Start of first PSDI pulse (PSDI input Low→High)** parameter is set to **After the start of upstroke**, a break is valid if the beginning of the break (i.e. falling edge (High to Low) at the **PSDI** input) occurs after the rising edge at the **Upstroke** input, no matter whether the **Top** input has changed to High already.

If the **Start of first PSDI pulse (PSDI input Low→High)** parameter is set to **After Top has been reached**, a break is only valid if the beginning of the break (i.e. falling edge (High to Low) at the **PSDI** input) occurs after the rising edge at the **Top** input.

In both cases, the end of the break (i.e. rising edge (Low to High) at the **PSDI** input) must occur after the rising edge at the **Top** input, no matter whether the **Top** input is still High or has changed back to Low already.

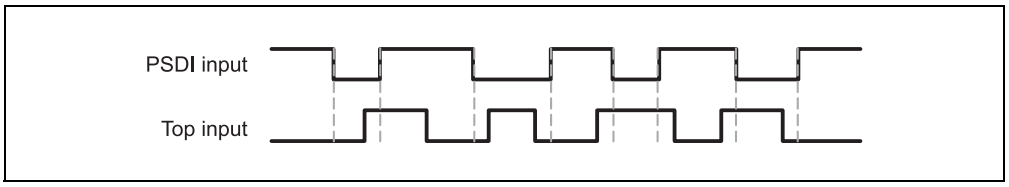

Figure 239:
Valid breaks when the Start of first PSDI pulse (PSDI input Low→High) parameter is set to After the start of upstroke

Note If the **Start of first PSDI pulse (PSDI input Low→High)** parameter is set to **After the start of upstroke**, upstroke muting must be enabled. Otherwise the **Enable** output changes to Low as soon as the **PSDI** input changes to Low (i.e. at the beginning of the break).

Upstroke muting and Max. Up-Stroke muting time

Upstroke muting allows bypassing of the **PSDI** input (e.g. the OSSDs of a safety light curtain) during the upstroke of the press cycle. Upstroke muting is activated when the **Max. Up-Stroke muting time** parameter is set to a value higher than 0. Upstroke muting is inactive when the **Max. Up-Stroke muting time** parameter is set to 0.

When upstroke muting is activated …

- it is imperative that the **Upstroke** input is connected to a suitable signal. This can be the **Upstroke** output e.g. of the Eccentric press contact or of the Universal press contact function block.
- the **PSDI** input of the function block is bypassed if the **Upstroke** input is High and the **Top** input remains Low.

The function block does not check the **Upstroke** input for plausibility. This means that it is possible to bypass the **PSDI** input several times if the **Upstroke** input is activated several times during a single press cycle.

ATTENTION

Exclude any danger during the upstroke movement of the press!

If you use upstroke muting, you must ensure that during the upstroke period no hazards are present, e.g. by the up movement itself.

Figure 240: Sequence/timing diagram for Upstroke muting in Standard mode in two-cycle mode

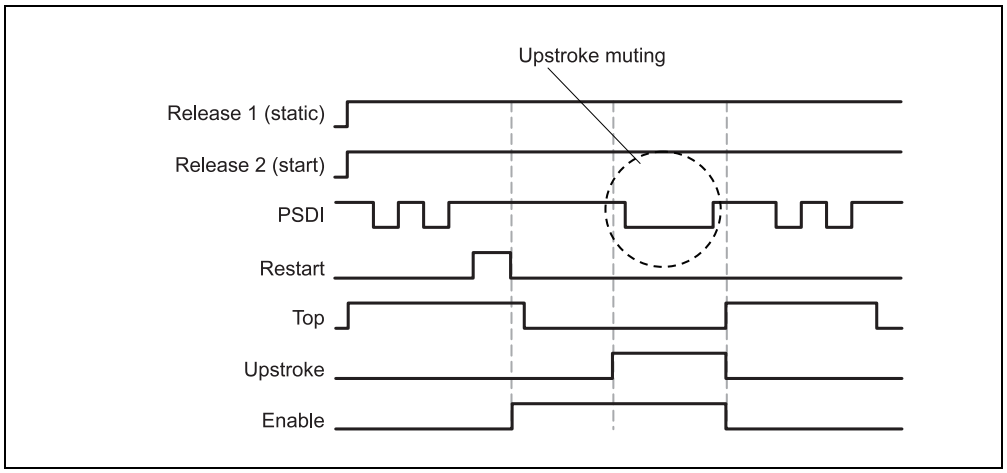

The **Max. Up-Stroke muting time** can be configured. The upstroke muting timer starts with a rising edge (Low to High) at the **Upstroke** input. If the timer reaches the configured **Max. Up-Stroke muting time** before another rising edge occurs at the **Upstroke** input, upstroke muting is interrupted and, if the **PSDI** input is Low, the **Enable** output is set to Low. When a second rising edge occurs at the **Upstroke** input, upstroke muting begins again.

Start position

If the **Start position** parameter is set to **Only on top**, a start of the press is possible only in the top position. In any other position a start is inhibited. If the press has been stopped e.g. by interruption of the light curtain during a downstroke, you must change to another press operating mode (e.g. in combination with the press setup function block) to move the press back to the top position, because the N-break function block inhibits a restart with this parameter setting.

If the **Start position** parameter is set to **Only on top**, the optional **Control of drive** input must be connected in order to monitor whether the press is currently running or has been stopped. This must be the signal which directly controls the press. Typically the **Control of drive** input will be connected via a jump address or a CPU marker to the logic editor signal which is connected to the physical output for the press.

Note Do not connect any physical input signals to the **Control of drive** input. Connect the signal that controls the physical output for the press drive using a jump address or a CPU marker.

- If a jump address is used, make sure that this signal is a loop-back. This is indicated by a clock icon on the destination tag of the jump address. To this purpose, connect the outputs of this function block to the following function blocks before you connect the jump address to the **Control of drive** input. This applies especially if all connections to the following function blocks are also realized using jump addresses.
- If a CPU marker is used, then a Routing function block must be used to split the signal to the physical output for the press drive and to the CPU marker output.

If the **Enable** output changes to Low as a result of either the **Release 1 (static)** input or the **PSDI** input has changed to Low, the diagnostic output **Top required** changes to High. A restart of the press is prevented until the **Top** input has changed back to High and no restart in another operating mode has occurred.

Release 1 (static)

The input signal **Release 1 (static)** is mandatory. The **Enable** output always changes immediately to Low, if **Release 1 (static)** is Low.

If this function block is used together with a press contact function block (e.g. Eccentric press contact or Universal press contact), its **Enable** output must be connected with the **Release 1 (static)** input of this function block.

Release 2 (start)

The input signal **Release 2 (start)** is optional. If **Release 2 (start)** is configured, the **Enable** output can only change to High (e.g. during switching on), when **Release 2 (start)** is High. When the **Enable** output is High, **Release 2 (start)** is no longer monitored.



ATTENTION

Do not use the Release 2 (start) input for safety purposes!

Do not use the **Release 2 (start)** input for initiating safety stops, because this input is evaluated temporarily during the start sequence only. Otherwise the operator of the press will be in danger.

Top

The **Top** input signal is used in order to determine the end of the press cycle (i.e. the press has reached the top dead center). This signal is available at the function blocks Eccentric press contact or Universal press contact.



ATTENTION

Do not use the Top input for safety purposes!

Connect the **Top** input only with the **Top** output of an Eccentric press contact or Universal press contact function block or to an equivalent signal source. Do not use the **Top** input for initiating safety stops. Otherwise the operator of the press will be in danger.

Upstroke input

If upstroke muting is enabled (i.e. if the **Max. Up-Stroke muting time** is greater than 0), the **PSDI** input of the function block is bypassed if the **Upstroke** input is High and the **Top** input remains Low.

Note Connect the **Upstroke** input only with the **Upstroke** output of an Eccentric press contact or a Universal press contact function block.

Restart input

If **Restart interlock** has been set to **Without**, a **Restart** signal is not required in order to restart the press after the **Enable** output has changed to Low.

If **Restart interlock** has been set to **Always** and the **Enable** output changes to Low, the **Enable** output can only be reset after a valid restart sequence with a Low-High-Low transition (minimum 100 ms or 350 ms; shorter pulses and pulses longer than 30 s will be ignored) has been carried out. The only exception to this rule is formed by the cycle beginning. In this case the **Restart interlock** parameter does not have any effect on the function block.

If **Restart interlock** has been set to **Always** and the **Max. Up-Stroke muting time** has been configured to 0 s, a Low signal at the **PSDI** input during the runup sets the **Enable** output immediately to Low.

If **Restart interlock** has been set to **Always** and upstroke muting is active, the **Enable** output remains High until the **Top** input becomes High, thus indicating that the press cycle has been completed. In this case, a complete restart sequence is required.

If **Restart interlock** has been set to **Deactivation on upstroke (only for PSDI)** and the **Upstroke** input is High, the **Enable** output remains High until **Top** becomes High, thus indicating that the press cycle has been completed. In this case, a cycle start sequence is required.

If the **PSDI** input changes after the **Max. Up-Stroke muting time** has elapsed from High to Low and back to High, the **Enable** output also changes from High to Low and back to High. The setting for this parameter does not have any effect when the **Restart** and **Upstroke** input signals remain unconnected.

Figure 241:
Sequence/timing diagram, when the PSDI input is Low, Upstroke muting is inactive and Restart interlock is set to “Always”

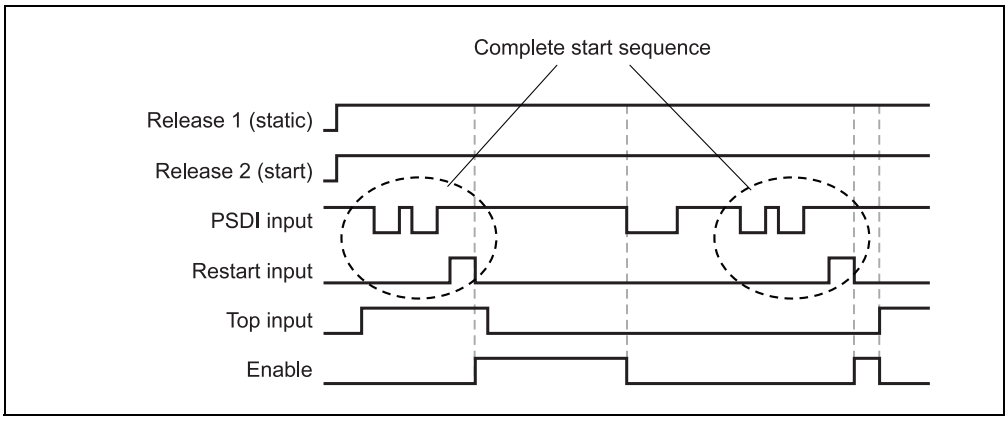

Figure 242:
Sequence/timing diagram when the PSDI input is Low, Max. Up-Stroke muting time > 0 and Restart interlock is set to “Deactivation on upstroke (only for PSDI)”

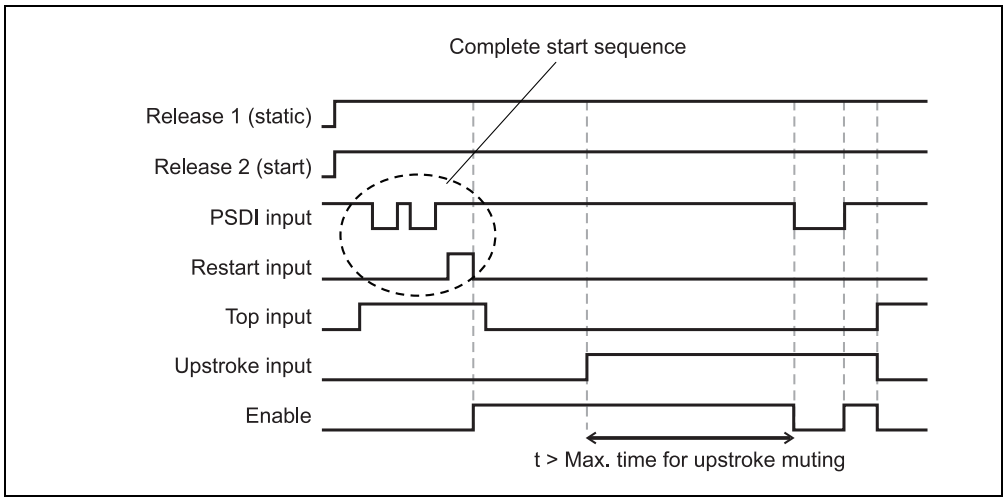

Output signals of the function block

Restart required output

The **Restart required** output is High when a valid restart sequence is expected at the **Restart** input.

PSDI required output

The **PSDI required** output is High when a break is expected at the **PSDI** input.

Unexpected PSDI

The **Unexpected PSDI** output is High when a valid start sequence has been carried out and the **PSDI** input changes from High to Low while no muting is active and no break is expected. If **Unexpected PSDI** is High, a valid restart sequence generally has to be carried out before the **Enable** output can be set to High.

If the **Unexpected PSDI** output is High and the **Enable** output is Low and the **PSDI** input is also Low and **Restart interlock** is set to **Without**, a restart is possible without a complete restart sequence. This can also apply during the press upstroke if **Restart interlock** is set to **Deactivation on upstroke (only for PSDI)**.

Error states and information on resetting

Table 113:
Error states and information on resetting for the N-break function block

Diagnostics outputs	Resetting the error state	Remarks
Unexpected PSDI	If an interruption of the protective field occurs, the **PSDI** input generally has to return to High, followed by a valid restart sequence, in order to reset the error. If the **Unexpected PSDI** output is High and the **Enable** output is Low and the **PSDI** input is also Low and **Restart interlock** is set to **Without** or **Deactivation on upstroke (only for PSDI)**, a restart is possible without a complete restart sequence. For **PSDI timeout** the error is reset by a valid restart sequence.	The **Enable** output changes to Low and **Fault present** changes to High, if **Unexpected PSDI** or **PSDI timeout** is High.
PSDI timeout		

9.13 User defined function blocks

9.13.1 Grouped function block

Function block diagram

Figure 243:
Function block diagram for the Grouped function block

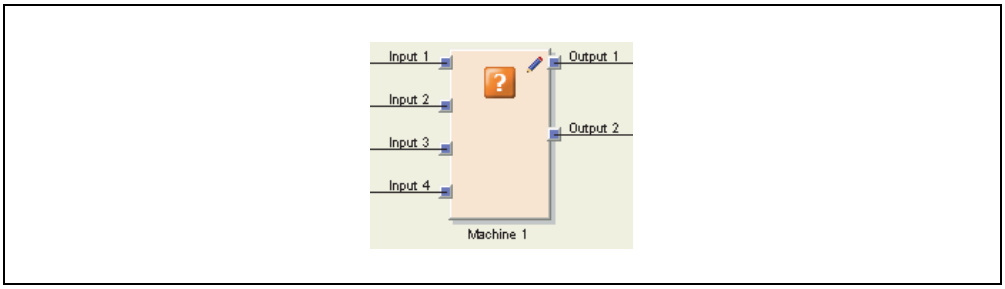

You can select groups of function blocks in order to create a single grouped function block. The typical purpose of a grouped function block is to simplify the re-use of groups of logic and to reduce the number of function blocks on a page.

A grouped function block has the following characteristics:

- It can have a maximum of 32 inputs and 32 outputs.
- It cannot contain the Fast Shut-off function block nor another grouped or customized function block.
- The icon representing the grouped function block is chosen from a fixed library within the Setting and Monitoring Tool.
- It is created within the logic editor, but is not listed in the function block list.
- It is saved with the project file. Upon re-opening the project file on another PC, the grouped function block will be displayed.
- It can be saved as a customized function block.

Note When determining the total number of function blocks within a project, the grouped function block is not counted as a single function block, but rather the total number of blocks used within it.

How to create a grouped function block:

➢ Select the function blocks which are to be grouped.

➢ Right click on one of the selected function blocks to call up the context menu.

Figure 244:
Creating a grouped function block

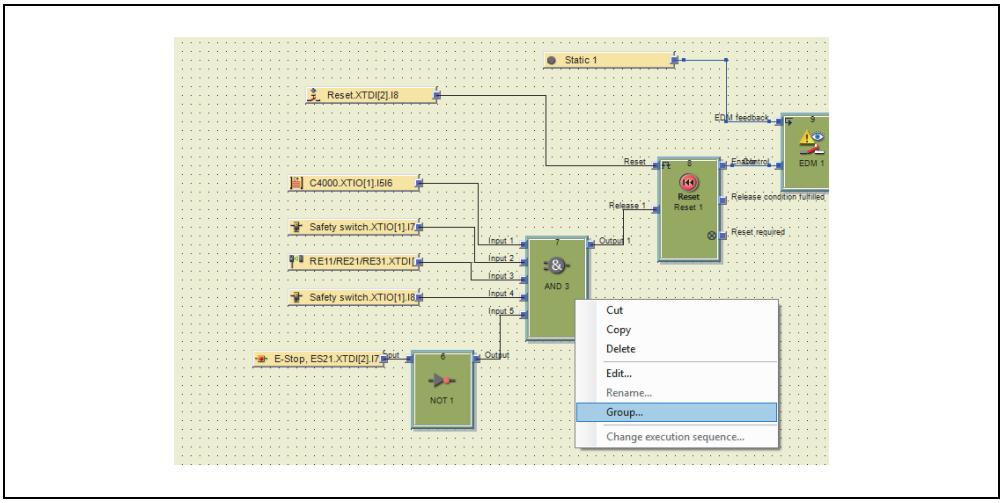

➢ Click on **Group**. The **Edit Function Block Details** dialog opens.

Figure 245:
Edit Function Block Details dialog for the Grouped function block

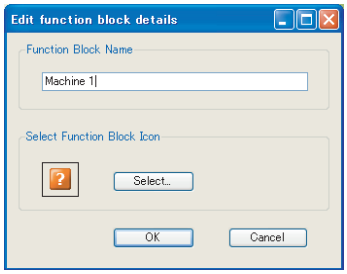

➢ Enter a name for the new grouped function block.

Note Do not enter the same name used in any existing grouped function block for the new grouped function block.

➢ If you want to assign another icon to the new grouped function block, click on **Select...** to open the **Select Icon** dialog. You can choose the icon from a fixed library.

Figure 246:
Select Icon dialog for the Grouped function block

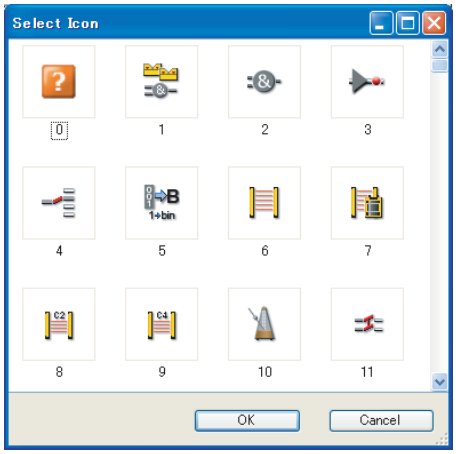

➢ Select the desired icon and click **OK**.

➢ Back in the **Edit Function Block Details** dialog, click **OK** to confirm your changes and to leave the dialog. The selected function blocks will be reduced to a single grouped function block on the worksheet for the main program.

Figure 247:
New grouped function block on the worksheet

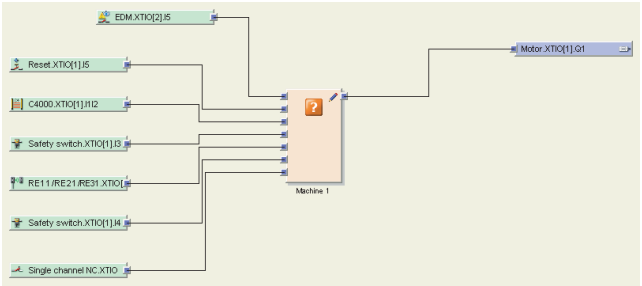

The content of the new grouped function block is stored on a new page. In the example, the name of the new grouped function block is Machine 1. The worksheet for the grouped function block is displayed orange.

Figure 248:
New logic editor page for the new grouped function block

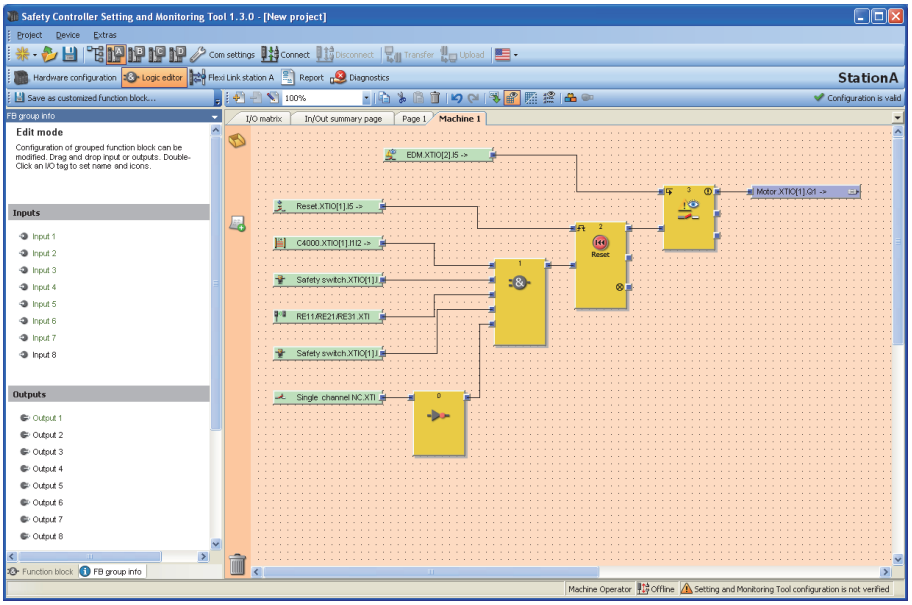

Note The name and the icon associated with a grouped function block can be edited here by clicking on the function block's icon in the **FB Group Info** view.

By clicking on the associated tab (here: Machine 1), you can edit the grouped function block.

How to add inputs and outputs to a grouped function block:

- ➢ Click on the tab for the grouped function block.
- ➢ Switch to the **FB Group Info** view on the left side of the screen.
- ➢ Drag and drop inputs or outputs onto the function block worksheet and attach them within the logic as needed. (Automatic wiring is not supported.)
- ➢ Double click on an input or output to edit its tag name.

Figure 249:
Adding inputs and outputs to a grouped function block

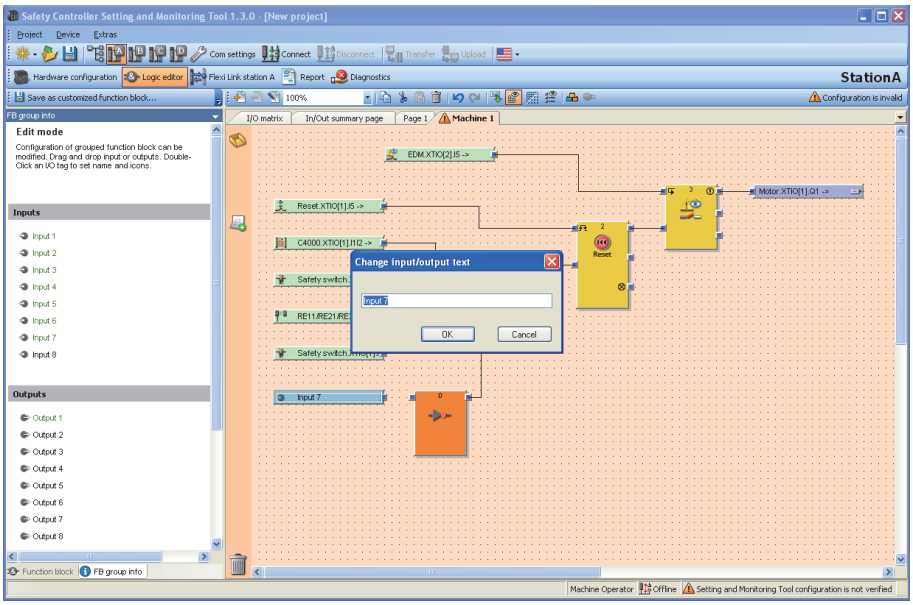

The inputs and outputs that have been added to the grouped function block will appear on the function block itself in the main program and devices can be attached to them. Once a device is attached, it will be displayed in the logic of the grouped function block when the view is switched to external view.

Figure 250:
Grouped function block with devices attached

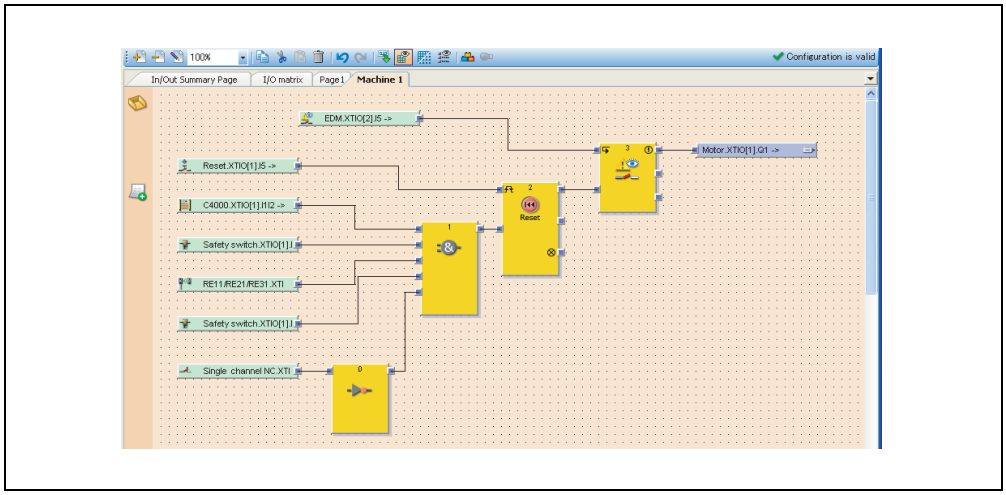

To switch between the internal tag names of the grouped function block (internal view) and the external I/O descriptions (external view), click on **Switch View** in the toolbar.

Figure 251:
Switching between internal and external view

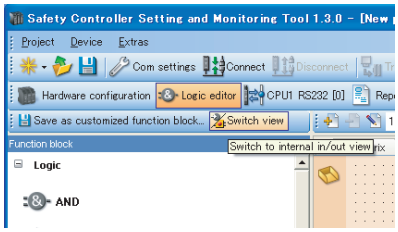

- The internal view shows the grouped function block's tag names for its inputs and outputs.
- The external view shows what is connected to the grouped function block.

How to transfer a grouped function block to another PC:

➢ Save the project file and open it on the other PC. Grouped function blocks contained in the project will be imported automatically.

Note

- The import of function blocks must be enabled in the **Hardware configuration** view (**Settings**, **General** tab, disable the option **Don't ask to import customized function blocks**). You will be asked to confirm the import, when you open the project file.

9.13.2 Customized function block

Once a grouped function block is created, it is possible to lock and import it into the function block selection field for use in future project files. The resulting function block is called a Customized function block.

Function block diagram

Figure 252:
Function block diagram for the customized function block

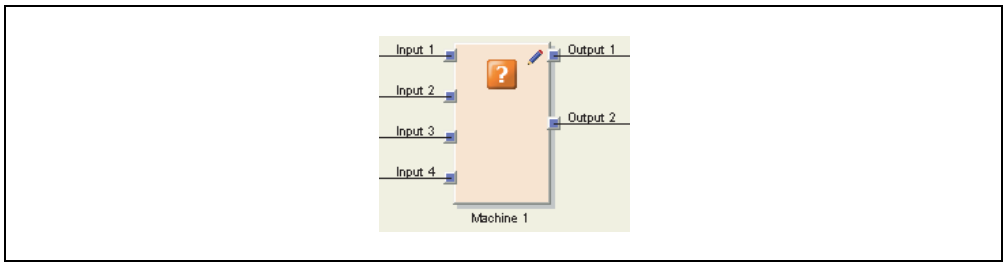

A customized function block has the following characteristics:

- It can have a maximum of 32 inputs and 32 outputs.
- It cannot contain the Fast Shut-off function block nor another grouped or customized function block.
- The icon representing the customized function block may either be user defined or chosen from a fixed library within the Setting and Monitoring Tool.
- It is created within the logic editor, will be listed with the other function blocks in the function block list and will be available in all new projects on the same PC.
- Upon opening a project file containing customized function blocks on another PC, you have the following options:
  - You can import the customized function blocks into the function block listing on the new PC for further use in new projects.
  - Or you can import the customized function blocks for this project only. In this case, they will not be listed in the function block list.

Note When determining the total number of function blocks within a project, the customized function block is not counted as a single function block, but rather the total number of blocks used within it.

How to create a customized function block:

In order to create a customized function block, you must have already created it as a grouped function block (see Section 9.13.1).

➢ Open the grouped function block view by clicking on its tab.

➢ Click on **Save as CFB...** in the toolbar. The **Edit Function Block Details** dialog opens.

Figure 253:
Edit Function Block Details dialog for the customized function block

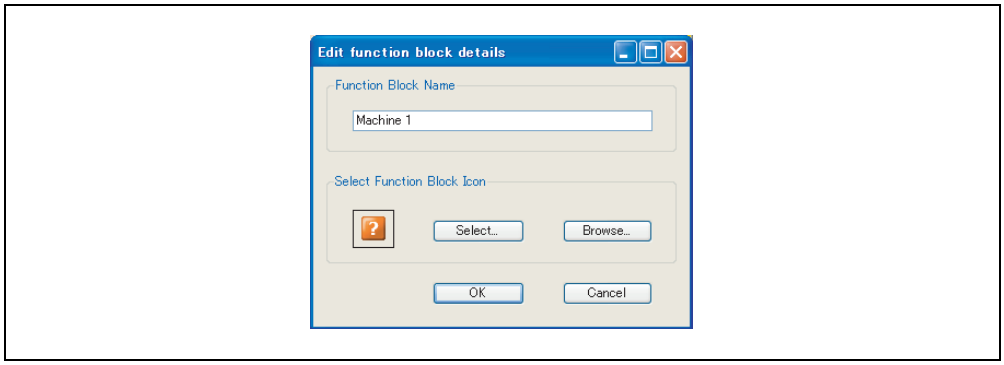

➢ Enter a name for the new customized function block.

Note Do not enter the same name used in any function block for the new customized function block.

➢ If you want to assign another icon to your new customized function block, you have two possibilities:
  – Click on **Browse...** to choose a user defined icon.
  – Or click on **Select...** to open the **Select Icon** dialog. You can choose the icon from a fixed library.

Figure 254:
Select Icon dialog for the customized function block

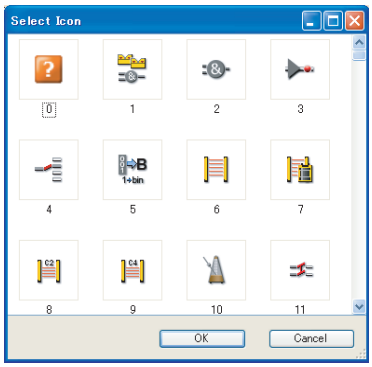

➢ Select the desired icon and click **OK**.

➢ Back in the **Edit function block details** dialog, click **OK** to confirm your changes. The selected grouped function block will appear in the function block list as a customized function block and will be available in all new projects on the same PC.

Figure 255:
New customized function block in the function block list

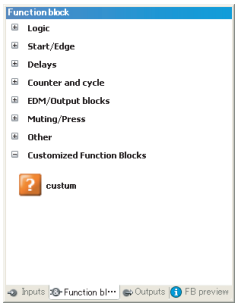

Once a customized function block has been placed on the worksheet, its content is displayed on a new page. In the example, the name of the customized function block is Machine 1. The worksheet for the customized function block is displayed orange. The customized function block can not be edited.

Note A grouped function block contains a small pencil icon in the upper right corner indicating that it can be edited. The customized function block contains a padlock indicating that it is locked against modification.

Figure 256:
Icons for the grouped function block and for the customized function block

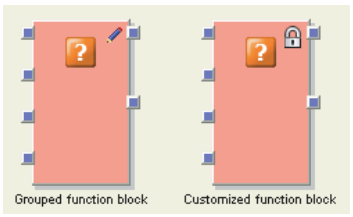

How to edit a customized function block:

- Open the customized function block's page by clicking on its tab,
- Click on **Edit...** in the toolbar. You will be prompted for confirmation. If you click on **Yes**, the customized function block will be transformed to a grouped function block which can be edited (see Section 9.13.1).
- In order to make the modified function block available for re-use in the function block list, save it again as a customized function block by clicking **Save as CFB...** in the toolbar.

How to transfer customized function blocks to another computer:

- Adding Customized Function Blocks to the function block list
  - Drag and drop the desired Customized Function Blocks into the logic editor and save the project file.
  - Open the project file on another computer. You will be prompted to accept an import of all Customized Function Blocks used in the project file.
  - Click on **Yes** to import the Customized Function Blocks. They will be listed in the function block list and will be available in all new projects on the same PC.
- Not adding Customized Function Blocks to the function block list
  - Click on No to import the Customized Function Blocks as grouped function blocks only. In this case, they will not be listed in the function block list and will be available for the current project only.

Note If a customized function block to be imported has the same name as another customized function block saved in the PC, the imported customized function block will be added under the same name.

How to delete a customized function block permanently from your PC:

- Delete all instances of the customized function block from your project or transform each of them to a grouped function block by clicking **Edit...** in the toolbar.
- In the function block list, right click on the customized function block you want to delete. The context menu opens.
- Choose **Delete Custom Function Block...**.

Note

- You cannot undo this action.
- Other projects containing customized function blocks that have been deleted can still be used. When opening an older project that contains customized function blocks that have been deleted from your PC, it will be treated like a project that has been transferred from another PC. You will be prompted whether you want to import the customized function blocks contained in the project permanently as customized function blocks or as grouped function blocks for use in the current project only.

9.14 Simulation of the configuration

Within the logic editor, it is possible to simulate the programmed logic offline. Inputs can be set to High or Low and the resulting switching of the outputs can be monitored. Additionally the timer and counter values of the used function blocks are displayed on the function blocks while the simulation is running.

➢ Click on the **Start simulation mode** icon ( ) in the toolbar to activate the simulation mode. The background of the logic editor will change to green and the simulation toolbar will appear.

Figure 257: Simulation toolbar

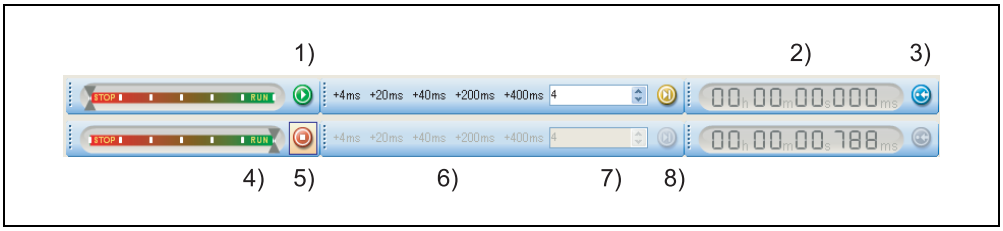

To start a simulation of the logic, click the green **Play** button (1)) for simulation at full speed (near to real time). The timer (2)) keeps track of the elapsed time. The timer can be reset using the blue **Reset** button (3)). To stop a simulation, click the red **Stop** button (5)).

Time control of the simulation

For logic processes which are too fast to see at normal speed there are two possibilities:

- Use the sliding bar (4)) to slow the simulated passage of time.
- It is possible to execute a simulation in time increments. To do so, stop the simulation by clicking on the red **Stop** button and click on one of the time increment buttons to the right of the sliding bar (6)). The following time periods are available by default: +4 ms, +20 ms, +40 ms, +200 ms and +400 ms. These values will be adapted automatically respective to the size of the programmed logic since they represent multiples of the logic execution time. By clicking on one of these time buttons, the simulation jumps forward by the specified time increment. Additionally, the input field on the right (7)) allows you to enter a user specific time period in ms, by which the simulation will jump forward when the yellow button (8)) beside the input field is pressed. By entering a large number such as 40000 (40 s) into this field, you can jump forward in order to avoid waiting for timers to complete their cycle, for example.

Note The entered time will be rounded to the nearest possible cycle time.

Figure 258:
Simulation mode started, simulation off

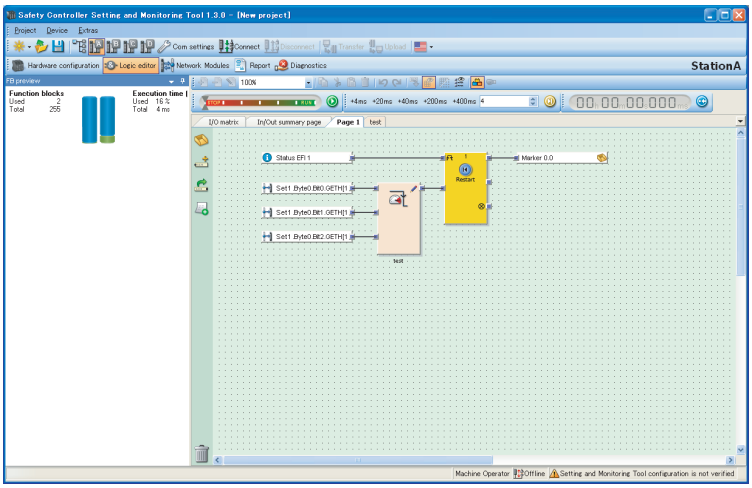

While the simulation is running you can set an input to High by clicking on it. High inputs will be displayed green with a blue frame. Another click will set the input back to Low again.

Figure 259:
Simulation mode started, simulation running

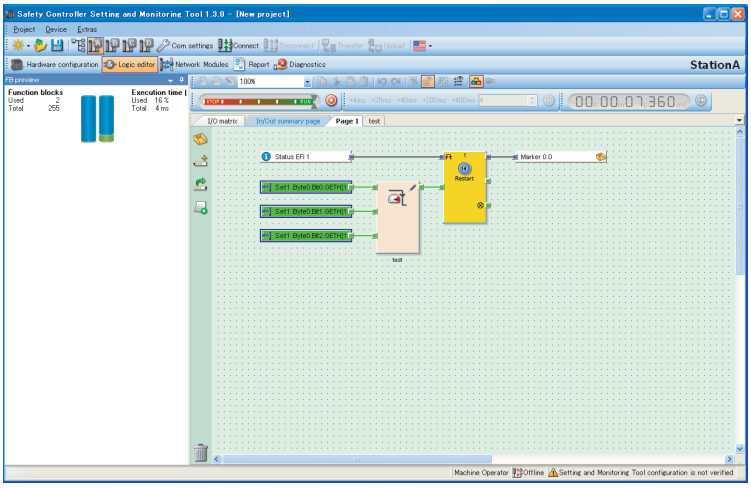

When the simulation is stopped, it is possible to select inputs to switch at the next possible moment. When clicking on an input in stopped mode, a blue box will appear around it denoting that it is ready to switch at the next cycle of the simulation. This makes it possible to switch one or more elements at the same time and see their direct effect on the logic.

After activation of the desired inputs, the simulation must be continued either by pressing the green **Start** button or by using one of the time increment buttons in order for the logic and outputs to switch accordingly.

Note If the EDM or the Valve monitoring function block is being used, it is recommended to remove them from the logic before simulating. These function blocks expect a high signal on their feedback input within 300 ms of their associated output being activated. This can only be simulated by using small increments and not in real time.

9.15 Force mode

In force mode you can set the inputs in the MELSEC-WS logic program to High or Low via Setting and Monitoring Tool independently of the values of the actual physical inputs while the MELSEC-WS safety controller is in the Run state. The MELSEC-WS safety controller and the programmed logic will react exactly in the same way as if the physical inputs had actually the respective values.

This enables you e.g. during commissioning or maintenance to test the wiring of your system and the function of your programmed logic in online operation.

Note

- You can force only the logic inputs of a safety controller directly, but not outputs or logic results such as function blocks or jump addresses.
- Forcing effects only function block inputs. Therefore it is not possible to influence signals that do not depend on the outputs of a function block, such as inputs of safety I/O modules that are routed directly to a programmable controller via a network module.

ATTENTION

Exclude any danger for persons or equipment!

In force mode you can freely influence the status of the safety inputs. As a result thereof, the safety function of your safety equipment can be impaired and a dangerous state may occur.

- Ensure that no person is present in the dangerous area of your machine or system before activating force mode.
- Ensure that no person can intrude into the dangerous area of the machine or system while force mode is active.
- Additional safety measures may be required if forcing is used.

Do not use force mode from several PCs simultaneously!

- When using force mode, ensure that no person activates the force mode from a second PC. Otherwise, a dangerous state may occur.

How to activate the force mode:

The following requirements must be met in order to use the force mode:

- You must be logged in to the system as Administrator.
- The configuration of your safety controller project may not be verified (CV LED ☀ **Yellow** flashing with 1 Hz).
- It is recommended to connect your PC to the MELSEC-WS safety controller via the communication interface of the CPU module (RS-232, USB), if you want to use the force mode.

Note If you try to activate the force mode although the configuration has been already verified (CPU module CV LED ● **Yellow** on), a dialog appears that allows you to reset the status to Not verified.

➢ Click on **Connect** to establish a connection to your MELSEC-WS safety controller.

➢ In the **Hardware configuration** view, click on the **Run application** button. If you have not yet logged in as Administrator, you will be prompted now to do so.

➢ Go to the **Logic editor** view and click on the **Start force mode** button. A dialog is opened where you can enter the time after which the force mode will be automatically left if no actions are taken.

Figure 260:
Dialog window when starting force mode

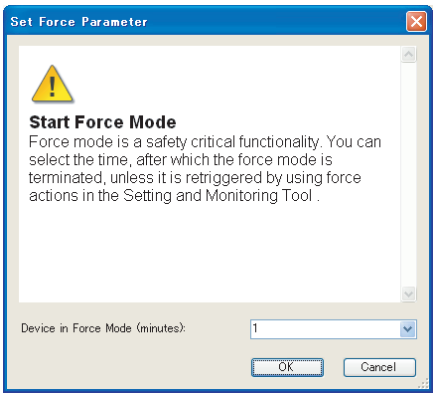

➢ Choose the desired time span from the drop box list and click **OK**. Force mode will be activated and the background colour of the logic editor changes to orange.

Figure 261:
Logic editor with force mode activated

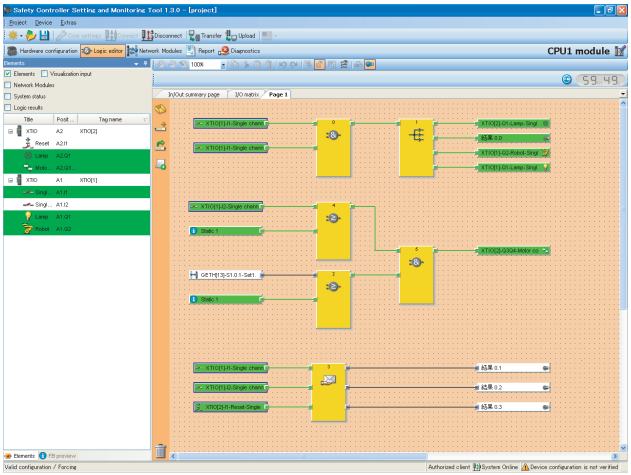

Note While force mode is active, it is not possible to logout, to upload and compare a configuration or to stop the safety controller.

How to force an input:

➢ Click on an input with the left mouse button. A context menu with the following options will appear:
  – **Force low...**: The MELSEC-WS safety controller will evaluate the input independently of its actual physical value as Low.
  – **Force high...**: The safety controller will evaluate the input independently of its actual physical value as High.
  – **Remove force...**: The safety controller will evaluate the input with its actual physical value.

Forced inputs are marked with a dark blue frame. High inputs are displayed green, Low inputs are displayed white. Inputs whose forced value differs from their physical value are displayed light blue.

Figure 262:
Forced and not forced inputs

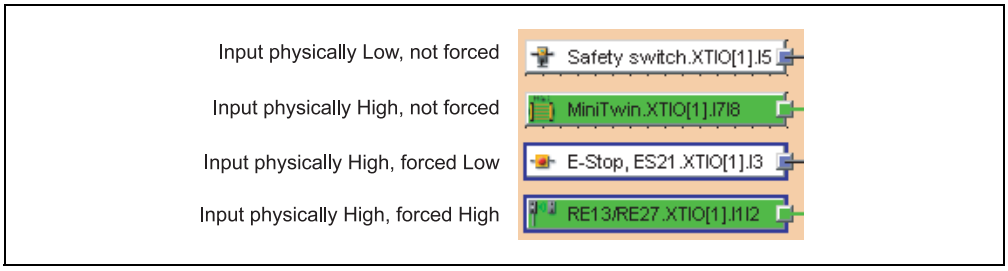

Note

- While an input is forced in the logic, the actual value on the physical input is not displayed in the logic editor but only in the **Hardware configuration** view.
- Forcing affects only the inputs in the logic program, but not the physical inputs of safety I/O modules. Examples:
  – Forcing has no effect on the inputs of a WS0-XTIO module that are used for Fast shut off. Therefore the hardware output may remain Low although the inputs are forced High in the logic because the Fast shut off on the WS0-XTIO is controlled directly via the physical inputs.
  – Forcing has no effect on inputs whose values are not being controlled by the logic program but are transferred directly to a programmable controller via a network module.
- Force mode always applies to the complete project. This means for logic programs using more than one page in the logic editor, that a forced input will be set to the same value on each page of the logic editor where it is used, not only on the currently displayed page.
- If forcing an input in a logic program causes more than 16 outputs to switch at the same time, then some of these outputs will be switched with a delay of one or more logic cycles due to the limited transmission capacity of the RS-232 or USB interface. The logic execution time depends on the size of your logic program. It is calculated automatically in the logic editor and is displayed in the top right corner of the **FB preview** window.
- Unlike the simulation mode, the force mode allows you to use the **EDM** or **Valve monitoring**, if corresponding devices are connected that will send the required feedback signal when the outputs are activated.
- When using a network module, please note that the process image of the network modules always reflects the actual physical value of the inputs and outputs of the connected devices and not the (virtual) forced value of an input in the logic program. If by forcing of an input in the logic program (e.g. from High to Low) the value of an output is changed (e.g. from High to Low), the actually changed value of the output (in the example Low) will be transferred to the programmable controller in the process image, but not the forced Low value of the input in the logic program. Instead still the actual physical value of the input on the device (in the example High) will be transferred. Take this into account when you evaluate the transferred data in the programmable controller.

Termination of the force mode

The force mode can be terminated in the following ways:

- manually through the user
- automatically after the defined time delay
- automatically after 30 seconds if the MELSEC-WS safety controller detects an error (e.g. if the connection to the PC is interrupted)

When the force mode is terminated, the safety controller switches all outputs to Low and the active application is stopped.

ATTENTION

Ensure that no dangerous situation can occur when the force mode is terminated!

- Ensure that your machine or system is transferred to a safe state and can not be damaged when the force mode is terminated.
- While the force mode has been active, the actual value of an input may have changed (e.g. button pressed, safety door opened etc.). Ensure that this can not cause any dangerous situation before restarting your machine or system.

➢ Click on the **Stop force mode** button. A safety message will appear. Click on **Yes** to confirm and terminate the force mode or click on **No** to keep the force mode active.

➢ If no force action (e.g. forcing of an input) has occurred for the time defined when the force mode was started, the force mode will be automatically terminated. During force mode, a timer in the top right corner shows the time remaining until the force mode is automatically terminated. Each action resets this timer. You can also reset the timer using the **Trigger force mode** button on its left. 15 seconds before the timer expires, a dialog is displayed that reminds you of the imminent termination of the force mode.

Figure 263:
Dialog before auto-matic termination of the force mode

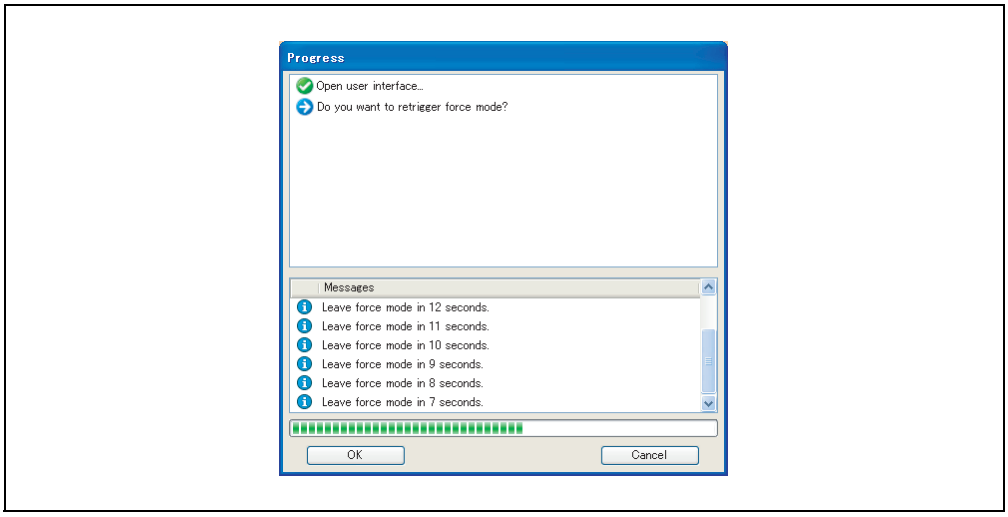

➢ If you ignore this dialog, the force mode will be terminated after the defined time delay has expired.

Or:

➢ Click on **Cancel**. The dialog will close and the force mode will be terminated after the defined time delay has expired.

Or:

➢ Click **OK** in order to close the dialog, reset the timer and keep the force mode active.

10 I/O modules

10.1 Dual channel evaluation and discrepancy time monitoring

Dual channel evaluation

The safety I/O modules, e.g. WS0-XTIO or WS0-XTDI, can carry out a dual-channel evaluation when predefined input elements from the **Elements** window (e.g. RE27, C4000, …) are connected to them. If such an input element is selected, you do not need a separate function block for dual-channel evaluation (e.g. light curtain monitoring, safety gate monitoring or magnetic switch).

The dual-channel evaluation evaluates the correct sequence of the two input signals. It is expected that if one of the two signals has caused a switching off, the other signal will follow accordingly. Which values the two signals must have depends on the type of the dual-channel evaluation. There are two possibilities:

- Equivalent evaluation
- Complementary evaluation

Discrepancy time

Dual channel elements can be evaluated with or without a **Discrepancy time**. The discrepancy time defines for how long the two inputs may have discrepant values after one of the both input signals has changed without this being considered as an error.

➢ To activate or to deactivate the **Discrepancy time** either click on the checkbox or on the 3D buttons on the right side of the element settings dialog.

For elements connected to WS0-XTDI and WS0-XTIO modules the following restrictions apply:

The Value for the discrepancy time can be set to 0 = inactive or to a value from 4 ms to 30 s. It will be rounded automatically to the next greater multiple of 4 ms due to the internal sampling frequency of the modules.

- If signals of tested sensors are connected to WS0-XTDI and WS0-XTIO modules, the discrepancy time has to be greater than the test gap + the max. Off-on delay of the used test output. You can find these values in the project report under **Configuration, I/O module, Test pulse parameter**.
- If you try to set a lower discrepancy time than allowed, the minimum value will be shown in the dialog window.

The following truth table describes the discrepancy conditions for the dual-channel equivalent and the dual-channel complementary input evaluation:

Table 114:
Dual-channel evaluation

Evaluation type	Input A (I1, I3, I5, I7)	Input B (I2, I4, I6, I8)	Discrepancy timer*1	Status of the dual-channel evaluation	Safety I/O module input in the logic editor	Discrepancy error
Equivalent	0	0	0	Inactive	0	0
	0	1	< Discrepancy time	Discrepant	0	Unchanged*2
	1	0	< Discrepancy time	Discrepant	0	Unchanged*2
	1	1	0	Active*3	1	0
	x	x	≥ Discrepancy time (timeout)	Error	0	1
Comple-mentary	0	1	0	Inactive	0	0
	0	0	< Discrepancy time	Discrepant	0	Unchanged*2
	1	1	< Discrepancy time	Discrepant	0	Unchanged*2
	1	0	0	Active*3	1	0
	x	x	≥ Discrepancy time (timeout)	Error	0	1

*1 If the discrepancy time is active (> 0), the discrepancy timer is restarted on the first signal change resulting in a discrepant status. If the discrepancy time is inactive (= 0), the discrepancy timer does not start, i.e. a timeout will never occur.
*2 Unchanged = Last status is preserved.
*3 If the correct sequence has been observed.

For the change between the different states of the dual-channel evaluation the following rules apply:

A dual-channel evaluation can only change to Active (the input of the safety I/O module in the logic editor changes from Low to High), if …

- since the last Active status at least once the status was Inactive, i.e. it is not possible to switch from Active to Discrepant and back to Active, and
- the discrepancy time has not elapsed or the discrepancy time is deactivated.

Note If the correct sequence to reach the Active status has not been observed (i.e. if the status has changed from Active to Discrepant to Active), WS0-XTIO and WS0-XTDI modules with firmware V2.00.0 and higher will display this sequence error after 100 ms at the latest, if the discrepancy time has not elapsed earlier (i.e. if the discrepancy time is set to 0 or to a value > 100 ms). Older modules will not display the sequence error, although their input in the logic editor remains Low as well.

In case of a discrepancy error or sequence error the module will behave as follows:

- The MS LED of the affected module will start flashing
  with firmware V1.xx.0: ☀ Red (1 Hz)
  with firmware ≥ V2.00.0: ☀ Red/Green (1 Hz)
- the LEDs of the affected inputs will start flashing ☀ Green (1 Hz),
- the module's **Status input data** in the logic editor will be Low.

Resetting the error:

A discrepancy error (timeout) or sequence error is reset, if the Inactive status has been reached.

10.2 ON-OFF filter and OFF-ON filter

Several unintentional brief signal changes occur when opening or closing a component fitted with contacts as the result of the bouncing of the contacts. As this may influence the evaluation of the input, you can use the **ON-OFF filter** for falling edges (i.e. transitions from High to Low) and the **OFF-ON filter** for rising edges (i.e. transitions from Low to High) to eliminate this effect.

➢ To activate or deactivate the **ON-OFF filter** or the **OFF-ON filter** either click on the checkbox or on the 3D buttons on the right side.

If the **ON-OFF filter** or the **OFF-ON filter** is active, a signal change will be recognized only if it is confirmed by three consecutive identical samples of the input with a sample rate of 4 ms, meaning constant signal for at least the duration of the filter time chosen. For this purpose the state of the input is evaluated at an interval of 4ms.

On WS0-XTIO and WS0-XTDI with firmware version ≤ 2.xx the filter time is not adjustable, but is fixed at 8 ms.

ATTENTION

Consider extended reaction times when using the input filters!

- Due to the modules' internal sampling rate of 4 ms, the ON-OFF filter and the OFF-ON filter extend the reaction time by at least 8 ms.
- If the signal is alternating within these initial 8 ms, the signal change can be delayed for much longer, i.e. until a constant signal of at least 8 ms has been detected.

Note For dual-channel elements with complementary evaluation the respective filter (ON-OFF or OFF-ON) is always related to the leading channel. Filtering of the complementary channel is active automatically.

10.3 Disabling the test pulses of WS0-XTIO outputs

It is possible to disable the test pulses on one or several outputs of WS0-XTIO modules with firmware version V2.00.0 and higher.

ATTENTION

Disabling the test pulses of any output reduces the safety parameters of all outputs!

Disabling the test pulses of one or more outputs of a WS0-XTIO module will reduce the safety parameters for all outputs Q1…Q4 of this module. Consider this to ensure that your application conforms to an appropriate risk analysis and avoidance strategy!

For detailed information on the safety parameters see the user's manuals (hardware).

How to disable the test pulses of a WS0-XTIO output:

➢ Connect an output element to the WS0-XTIO module.

➢ Right click the output element and select **Edit...** from the context menu.

Deactivate the option **Enable test pulses of this output**. The test pulses of this output are switched off. A notice will be displayed in the hardware configuration area under the respective WS0-XTIO module.

11 Transferring the system configuration

Initially, the configuration of the MELSEC-WS safety controller only exists as a project, meaning as a MELSEC-WS configuration file. The configuration has to be transferred to the memory plug via the CPU.

Note The memory plug and the CPU module communicate via an internal interface. Direct connection of a PC to the memory plug is not possible. Data can only be loaded to the memory plug or read from it via a compatible CPU module.

The configuration data are checked for compatibility during transfer to the memory plug and can subsequently be verified (through reading and comparing) and optionally have a write protection assigned to it.

Note If an error is detected in a module during transfer, data may not be written correctly to the memory plug. (A memory plug error may be detected after the voltage supply has been switched off and on.)

Eliminate the error cause, and retry transfer.

With the memory plug the project data can be transferred without further processing using the Setting and Monitoring Tool to any number of MELSEC-WS safety controllers. The configuration data are copied exactly in the process, including the verification and any write-protection information that were set during the configuration of the first safety controller with these data.

Note Before using standby, hibernation, or sleep mode of PC, disconnect the PC from the MELSEC-WS safety controller.

Note Before removing the RS-232 USB converter (WS0-UC-232A), disconnect the PC from the MELSEC-WS safety controller.

11.1 Transferring project data to the safety controller

After the transfer, the configuration data are read back from the memory plug if the verification has been activated in the Setting and Monitoring Tool (see Section 11.3).

Note The reading back of the configuration data from the memory plug requires some time. The memory plug may not be removed during this time. The Setting and Monitoring Tool displays a corresponding warning as long as the process takes.

11.2 Compatibility check

The configuration data contain an electronic type code and a version code for each module that is to be configured. During the transfer each module checks whether it is compatible with the configuration data. The compatibility check only applies to the functional part of the respective module, not to the hardware variant, the implementation of the terminals, for example, remains unconsidered.

If the compatibility check is negative, a corresponding error message is generated in the respective module and in the CPU module.

Note In Setting and Monitoring Tool different version numbers are assigned to some modules so that a compatible module can be selected from a list below the module.

11.3 Verification of the configuration

After the configuration has been downloaded to the safety controller, the MELSEC-WS safety controller can be verified. To this purpose, the downloaded configuration data are read back from the safety controller and compared with the project data. If they match, the data are displayed in a report. If the user confirms that they are correct, the safety controller, is considered to be verified.

Note If the configuration is verified, the MELSEC-WS safety controller will change into the Run state automatically after the voltage supply has been switched on. If the configuration is not verified, the system must be set into the Run state manually using the Setting and Monitoring Tool (see Section 12.1).

How to verify the configuration:

➢ Click the **Upload and verify configuration** button.

Figure 264: Upload and verify configuration



➢ The **Upload and verify result** window is opened. Click **Yes** below at the question **Set device to verified?** if the displayed configuration is the expected configuration. The system is then considered to be verified.

Figure 265:
Setting a device to verified.

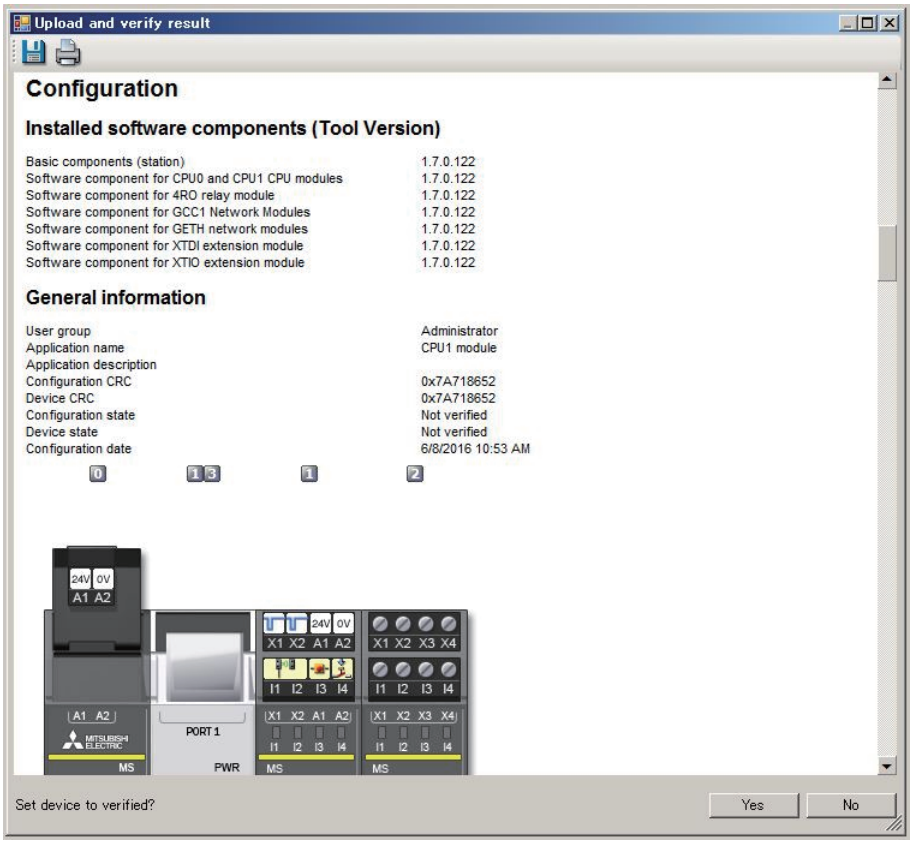

Note The configuration of the connected elements, for example EFI sensors, is not included in the process. Their verification is carried out in the same way as the configuration and verification via the serial interfaces of the devices.

➢ If differences between the project data and the read-back configuration data are detected, a corresponding message including information about possible actions is displayed. Verification of the configuration is not possible then. Observe the information in the error message for the further procedure. Terminate the dialog box by clicking **Close**.

Figure 266:
Upload and verify failed

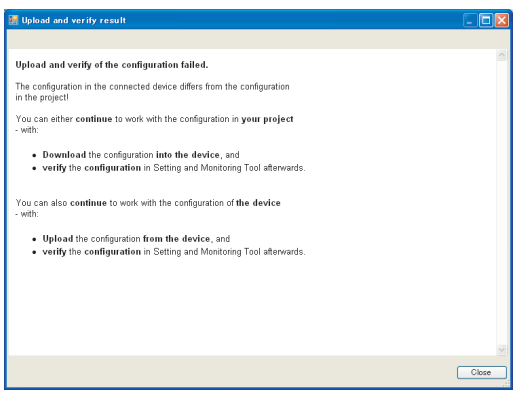

If the verification is completed successfully, a project report is created subsequently that you can print and save.

The query whether the device is to be marked as verified is displayed in the lower part of the report window. You must be logged in as an Administrator to mark the device as “verified”. The status verified/not verified is indicated in the lower right-hand corner of the Setting and Monitoring Tool and by the CV LED at the CPU module lighting up.

Figure 267:
Verification successful

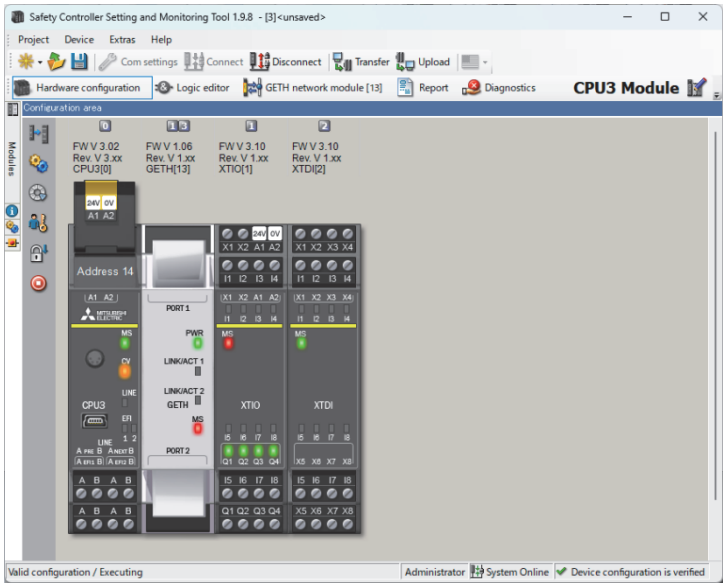

The verification flag is included in copying when the data are read back into the memory plug and are also transferred automatically to each safety controller to which the configuration data are duplicated.

The safety controller is also ready to use when the configuration is only validated and not verified or does not have a write protection. However the automatic transition of the MELSEC-WS safety controller into the Run state after the voltage supply has been switched on is not possible then.

Note The dialog box for verification is only displayed after a request by the user in order to ensure that the verification process does not have to be passed through every time the configuration is changed or new project data uploaded.

In order to validate the MELSEC-WS safety controller, the safety functions at the machine or system have to be checked completely and have to function perfectly. With regard to its content, the validation is identical to the technical test taking place when the safety controller is commissioned.

11.4 Activating the write protection of the configuration in the safety controller

A verified configuration can be protected against accidental changes by activating the write protection. The write protection can be set and deactivated in the Setting and Monitoring Tool by using the lock symbol in the **Hardware configuration** to the left of the CPU module.

The write protection is included in copying when the data are transferred to the memory plug and are also transferred automatically to each safety controller to which the configuration data are duplicated.

11.5 Configuration checksums

Configuration checksums are displayed in Setting and Monitoring Tool in the report and on the information page for the hardware configuration. The checksums have the following meaning:

- Total checksum:

  Same value as the WSFlexi Soft checksum

- WS checksum:

  This checksum covers the configuration of the WS system, i.e. for all Modules. The configuration of EFI devices connected is not included in the WS checksum.

- Logic page checksum:

  Checksum information for each logic page is displayed.

Each checksum is four bytes long.

11.6 Deletion of the configuration in the safety controller

A configuration in a memory plug can be deleted (A CPU module with firmware version V2.01 and higher, and the Setting and Monitoring Tool version V1.7.0 or higher is necessary.) A configuration can be deleted in the Setting and Monitoring Tool by right-clicking on a CPU module in the Hardware configuration and selecting Delete memory plug.

12 Device states of the MELSEC-WS safety controller

The MELSEC-WS safety controller knows different device states during operation. Some device states require a user intervention, e.g. the state transition from Stop to Run or vice versa using the Setting and Monitoring Tool. Other states are based on the internal self-test of the safety controller, e.g. Internal error. The following table summarizes the device states of the safety controller.

Table 115:
Device status and LED displays on the CPU module

MS LED	Meaning	Notes
○	Supply voltage is outside range	Switch on the supply voltage and check it at the terminals A1 and A2.
☀ Red/Green (1 Hz)	A self test is being carried out or the system is being initialized	Please wait …
☀ Green (1 Hz)	System is in Stop state	Start the application in the Setting and Monitoring Tool.
☀ Green (2 Hz)	Identify (e.g. for Flexi Link)	–
● Green	System is in Run state	–
☀ Red (1 Hz)	Invalid configuration	Check the module type and version of the CPU module and safety I/O modules whose MS LED flashes ☀ Red/Green. If appropriate, adapt the configuration using the Setting and Monitoring Tool. For detailed diagnostics information refer to the Setting and Monitoring Tool.
☀ Red (2 Hz)	Critical error in the system, possibly in this module. Application is stopped. All outputs are switched off.	Switch the supply voltage off and on again. If the error is not eliminated after multiple repetition, replace this module. For detailed diagnostics information refer to the Setting and Monitoring Tool.
● Red	Critical error in the system, possibly in another module. Application is stopped. All outputs are switched off.	Switch the supply voltage off and on again. If the error is not eliminated after multiple repetition, replace the module which displays ☀ Red (2 Hz). If this is not the case, use the diagnostic functions of the Setting and Monitoring Tool to narrow down the respective module.
CV LED	**Meaning**	**Notes**
○	Configuration in progress	Please wait …
☀ Yellow (2 Hz)	Storing of configuration data in the memory plug (non-volatile memory)	Supply voltage may not be interrupted until the storage process has been completed.
☀ Yellow (1 Hz)	Unverified configuration	Verify configuration with the Setting and Monitoring Tool.
● Yellow	Verified configuration	–

Symbol description:
○: LED off, ● : LED lights up, ☀ : LED flashes

12.1 Changing the device state

Specific state changes in the MELSEC-WS safety controller are carried out manually in the Setting and Monitoring Tool. These changes in the device state are:

- change from Stop to Run
- change from Run to Stop

In order to change the device state, click on the **Stop application** or **Run application** button next to the representation of the modules in the hardware configuration.

Table 116:
Run button and Stop button

Icon	Function	Description
	Run	Sets the system into the Run state.
	Stop	Sets the system into the Stop state.

Note If the configuration is verified, the MELSEC-WS safety controller will go into the Run state automatically after the voltage supply has been switched on. If the configuration is not verified, the system must be set into the Run state manually using the Setting and Monitoring Tool.

12.2 Behaviour on startup

When the MELSEC-WS safety controller changes from the Stop state to the Run state:

- The **First logic cycle** status bit of the CPU module is High for the logic execution time. This status bit is available as a CPU input element in the logic editor.
- All timers and states including the error states of the function blocks are reset.

12.3 Software reset of the CPU module

It is possible to reset the CPU module via software (i.e. without interrupting the voltage supply), if the Setting and Monitoring Tool is connected with the CPU module.

How to perform a software reset:

➢ In the **Hardware configuration** view, right click on the CPU module in the **Configuration area** and select the **Software reset** command from the context menu.

➢ If you are not logged in as Administrator, you will be prompted to log in now.

➢ A safety message will appear. Click on **Yes** to reset the CPU module.

ATTENTION

Before you reset the CPU module, check whether the system is in a safe state!

If you reset the CPU module, the outputs (e.g. the **Enable** output) could change their status. The **Software reset** command should only be used when the hazardous area has been checked visually and nobody is in the hazardous area or has access to the hazardous area while the CPU module is being reset.

Note If the configuration is verified, the CPU module will change back into the Run state automatically after the reset. If the configuration is not verified, you will have to start the CPU module manually using the Setting and Monitoring Tool.

13 Technical commissioning

The configuration of the MELSEC-WS safety controller has to be completed before you begin with the technical commissioning.

13.1 Wiring and voltage supply

ATTENTION

When connecting the MELSEC-WS safety controller, observe the technical data in the Safety Controller User's Manual!

- Connect the individual field devices to the corresponding signal connections and check for each safety input, test/signal output and safety output whether these behave as required for the application. Diagnostics information from the MELSEC-WS module's LEDs support you in validating the individual field signals. Check whether the external circuit, the realisation of the wiring, the choice of the pick-ups and their location at the machine fulfill the required safety level.
- Eliminate any faults (e.g. incorrect wiring or crossed signals) at each safety input, test/signal output or safety output before you continue with the next step.
- Switch on the voltage supply. As soon as the supply voltage is applied to the connections A1 and A2 of the CPU modules or the WS0-XTIO modules, the MELSEC-WS safety controller automatically carries out the following steps:
  - internal self-test
  - loading of the saved configuration
  - testing of the loaded configuration for validity

The system does not start up if the steps described above could not be carried out successfully. If there is an error, this is indicated correspondingly by the LEDs (see the Safety Controller User's Manual) and the safety controller only transfers Low values.

13.2 Transferring the configuration

After you have configured the hardware and the logic in the MELSEC-WS safety controller and have checked whether they are correct, transfer the configuration to the safety controller via the Setting and Monitoring Tool.

13.3 Technical test and commissioning

The machine or system that is protected by a MELSEC-WS safety controller may only be started up after a successful technical check of all safety functions. The technical test may only be performed by qualified safety personnel.

The technical test includes the following test items:

- Uniquely mark all connection cables and connectors at the safety controller in order to avoid confusion. Since the MELSEC-WS safety controller has several connections of the same design, you must ensure that loosened connection cables are not connected back to the wrong connection.
- Verify the configuration of the MELSEC-WS safety controller.
- Check the signal paths and the correct inclusion in higher-level controllers.
- Check the correct data transfer from and to the MELSEC-WS safety controller.
- Check the logic program of the safety controller.
- Completely document the configuration of the entire system, of the individual devices and the results of the safety check.
- Check the safety functions of the machine or system completely and ensure that the safety functions function perfectly.
- In order to prevent unintentional overwriting of the configuration, activate the write protection of the configuration parameters of the MELSEC-WS safety controller. Modifications are now no longer possible unless the write protection has been deactivated.

14 Troubleshooting

In case of an error please refer to the Safety Controller User's Manual. There you will find a list of LED error displays, error codes, error causes and rectification measures.

Error codes and error messages can also be displayed in the **Diagnostics** view if you are connected to the MELSEC-WS safety controller. For more information on how to perform diagnostics, see Section 5.8.

15 Annex

15.1 Example application reports

15.1.1 Example application Newspaper palletizer

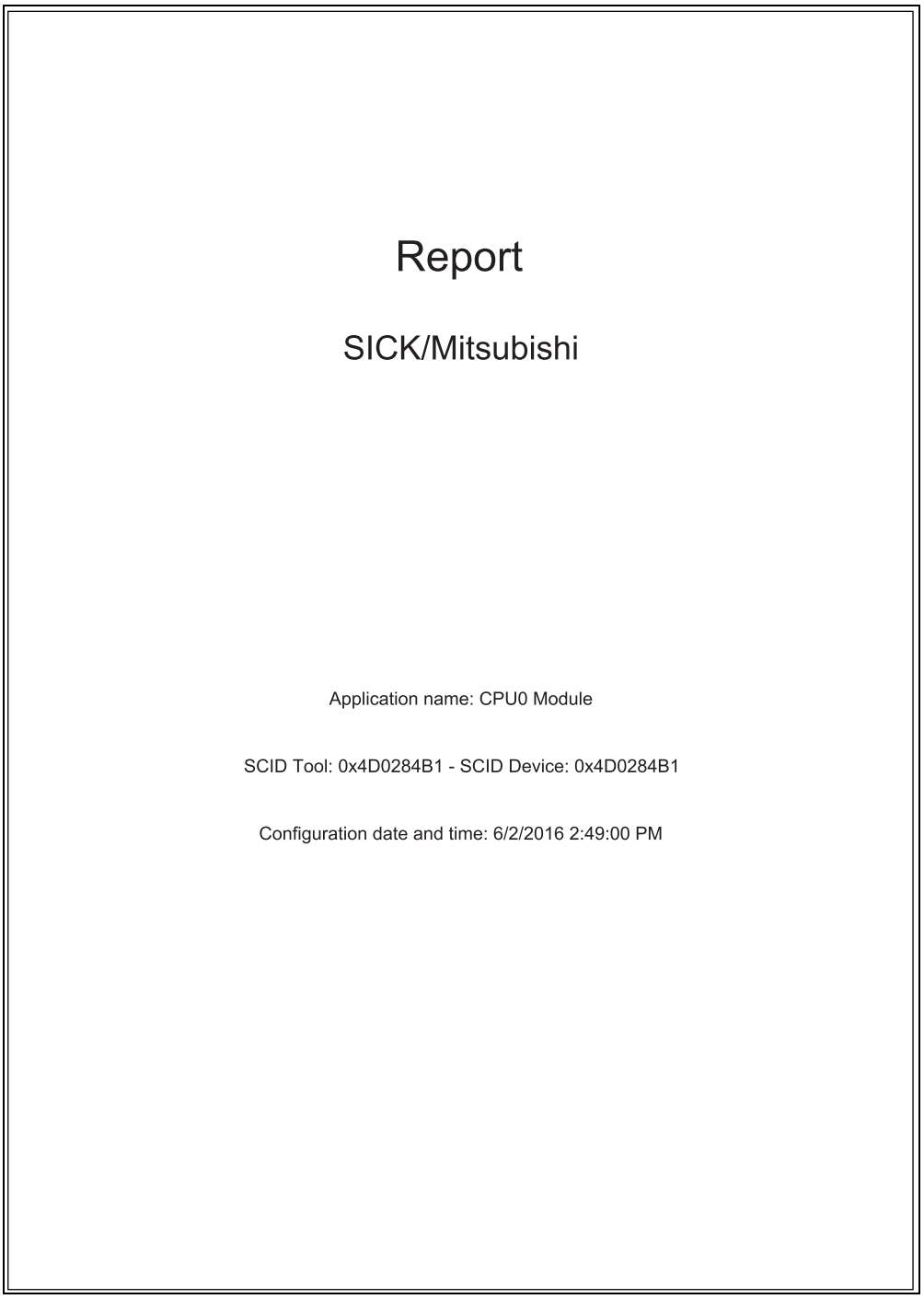

Report

SICK/Mitsubishi

Application name: CPU0 Module

SCID Tool: 0x4D0284B1 - SCID Device: 0x4D0284B1

Configuration date and time: 6/2/2016 2:49:00 PM

Report 6/6/2016 9:52:14 AM

Content

1. Bill of material....4
2. Diagnostics....5
3. Summary....5
   3.1. Module 0....5
   3.2. Module 1....5
   3.3. Module 2....6
   3.4. Module 3....6
4. Configuration....6
   4.1. Installed software components (Tool Version)....6
   4.2. General information....6
   4.3. CPU....7
      4.3.1. CPU0 - General information....7
      4.3.1.1. CRC values....7
      4.3.2. CPU logic....8
      4.3.2.1. Muting station 1....8
      4.3.2.2. Muting station 2....8
      4.3.2.3. Door lock function....9
      4.3.3. CPU0 - IO....9
      4.3.3.1. Wiring diagram....9
   4.4. I/O module....10
      4.4.1. XTIO[1]....10
      4.4.1.1. General Information....10
      4.4.1.2. Inputs....10
      4.4.1.3. Outputs....10
      4.4.1.4. Power Supply....10
      4.4.1.5. Wiring diagram....10
      4.4.2. XTIO[2]....11
      4.4.2.1. General Information....11
      4.4.2.2. Inputs....11
      4.4.2.3. Outputs....12
      4.4.2.4. Power Supply....12
      4.4.2.5. Wiring diagram....12
      4.4.3. XTIO[3]....12
      4.4.3.1. General Information....12
      4.4.3.2. Inputs....13
      4.4.3.3. Outputs....13
      4.4.3.4. Power Supply....13
      4.4.3.5. Wiring diagram....13
5. I/O overview....14

Page 2

Report 6/6/2016 9:52:14 AM

5.1. I/O module.....14

Report 6/6/2016 9:52:14 AM

1. Bill of material



QTY	Title	Tag name	Part number	Internal item number	Description
1	CPU0	CPU0[0]	-		CPU0 Module
1	MPL0	Memory plug	-		MELSEC-WS Memory Plug 0
1	XTIO	XTIO[1]	-		XTIO input/output expansion module
1	2 sensor muting /	2 sensor muting.XTIO [1].I7/I8			
1	E-Stop, ES21 / Dual channel	E-Stop, ES21.XTIO[1].I1I2			
1	E-Stop, ES21 / Dual channel	E-Stop, ES21.XTIO[1].I3I4			
1	C4000 / Safety light curtain, type 4	C4000.XTIO[1].I5I6			
1	Motor contactor / Dual channel	Motor contactor.XTIO [1].Q1Q2			
1	Motor contactor / Dual channel	Motor contactor.XTIO [1].Q3Q4			
1	XTIO	XTIO[2]	-		XTIO input/output expansion module

Page 4

Report 6/6/2016 9:52:14 AM

QTY	Title	Tag name	Part number	Internal item number	Description
1	2 sensor muting /	2 sensor muting.XTIO [2].I7/I8			
1	Interlock / Dual channel	Interlock.XTIO[2].Q1/I1I2			
1	Interlock / Dual channel	Interlock.XTIO[2].Q2/I3I4			
1	Lamp / Single channel	Lamp.XTIO[2].Q3			
1	C4000 / Safety light curtain, type 4	C4000.XTIO[2].I5I6			
1	XTIO	XTIO[3]	-		XTIO input/output expansion module
1	Reset / Single channel	Reset.XTIO[3].I3			
1	Single channel NO / Single channel	Single channel NO.XTIO [3].I4			
1	EDM / Single channel	EDM.XTIO[3].I5			
1	Single channel NO / Single channel	Single channel NO.XTIO [3].I6			
1	Single channel NO / Single channel	Single channel NO.XTIO [3].I7			
1	Lamp / Single channel	Lamp.XTIO[3].Q3			
1	Lamp / Single channel	Lamp.XTIO[3].Q4			
1	S3000 / Safety laser scanner, type 3	S3000.XTIO[3].I1I2			
1	Motor contactor / Dual channel	Motor contactor.XTIO [3].Q1Q2			

2. Diagnostics

Current operation time: 89.10:26:44, power cycle: 513 - Current: 0, Historical: 0

No error history available.

3. Summary

3.1. Module 0

	Device:	Type code:	Serial number:	Firmware version:	Hardware version:	Version/ Step:	Operational status:
	CPU0	WS0-CPU0	1132 0435	V 2.01.0	1.00	1.7.0.122 V 2.xx	Online

3.2. Module 1

Report 6/6/2016 9:52:14 AM

	Device:	Type code:	Serial number:	Firmware version:	Hardware version:	Version/ Step:	Operational status:
	XTIO	WS0-XTIO	1530 0002	V 3.10.0	1.11	1.7.0.122 V 3.xx	Online

3.3. Module 2

	Device:	Type code:	Serial number:	Firmware version:	Hardware version:	Version/ Step:	Operational status:
	XTIO	WS0-XTIO	1530 0004	V 3.10.0	1.11	1.7.0.122 V 3.xx	Online

Error messages
Module has external error
Module power supply is missing

3.4. Module 3

	Device:	Type code:	Serial number:	Firmware version:	Hardware version:	Version/ Step:	Operational status:
	XTIO	WS0-XTIO	1530 0006	V 3.10.0	1.11	1.7.0.122 V 3.xx	Online

Error messages
Module has external error
Module power supply is missing

4. Configuration

4.1. Installed software components (Tool Version)

Basic components (station)	1.7.0.122
Software component for CPU0 and CPU1 CPU modules	1.7.0.122
Software component for 4RO relay module	1.7.0.122
Software component for GCC1 Network Modules	1.7.0.122
Software component for GETH network modules	1.7.0.122
Software component for XTDI extension module	1.7.0.122
Software component for XTIO extension module	1.7.0.122

4.2. General information

User group	Administrator
Application name	CPU0 Module
Application description	

Page 6

Report 6/6/2016 9:52:14 AM

Configuration CRC	0x4D0284B1
Device CRC	0x4D0284B1
Configuration state	Not verified
Device state	Verified
Configuration date	6/2/2016 2:49 PM



Module	Type code	Rev.	Address
CPU0	WS0-CPU0	V 2.xx	0
XTIO	WS0-XTIO	V 3.xx	1
XTIO	WS0-XTIO	V 3.xx	2
XTIO	WS0-XTIO	V 3.xx	3

4.3. CPU

4.3.1. CPU0 - General information

Type code	Serial number	FW version	Hardware version	Version/Step	Memory usage (UI/ Logic)	Address
WS0-CPU0	1132 0435	V 2.01.0	1.00	1.7.0.122 V 2.xx	3.19% / 3.79%	0
WS0-MPL	1524 0064	-	-	1.7.0.122	-	-

4.3.1.1. CRC values

Page 7

Report 6/6/2016 9:52:14 AM

	Project CRC value	Device CRC value
Configuration CRC	0x4D0284B1	0x4D0284B1

4.3.2. CPU logic

	Used
Function blocks	8
Execution time (ms)	4

4.3.2.1. Muting station 1

No	Name	Input	Output	Settings
0	Off-delay timer	I.0 1 muting sensor.XTIO [1].I7	O.0 Cross muting 0 -> I.1 - > A1	Delay time: 500 ms
1	Off-delay timer	I.0 2 muting sensors.XTIO [1].I8	O.0 Cross muting 0 -> I.2 - > A2	Delay time: 500 ms
2	Cross muting	I.0 C4000.XTIO[1].I5I6 I.1 Off-delay timer 0 -> O.0 -> Enable I.2 Off-delay timer 1 -> O.0 -> Enable	O.1 Lamp.XTIO[3].Q3 O.2 Not connected O.4 Not connected	Direction detection: Disabled Condition of other sensor pair for muting start: Both inputs are clear Muting end condition: With muting sensor pair Muting Total Time: 5sec Concurrency monitoring time: 0 ms Sensor signal gap monitoring: 100 ms Sequence monitoring: Disabled Add. muting time when ESPE is clear: 0 ms C1 input: Without Override input: Without Conveyor input: Without Min. override pulse time: 100 ms

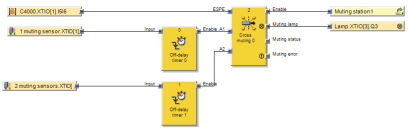

4.3.2.2. Muting station 2

No	Name	Input	Output	Settings
3	Off-delay timer	I.0 1 muting sensor.XTIO [2].I7	O.0 Cross muting 1 -> I.1 - > A1	Delay time: 500 ms
4	Off-delay timer	I.0 2 muting sensors.XTIO [2].I8	O.0 Cross muting 1 -> I.2 - > A2	Delay time: 500 ms
5	Cross muting	I.0 C4000.XTIO[2].I5I6 I.1 Off-delay timer 2 -> O.0 -> Enable I.2 Off-delay timer 3 -> O.0 -> Enable	O.1 Lamp.XTIO[3].Q4 O.2 Not connected O.4 Not connected	Direction detection: Disabled Condition of other sensor pair for muting start: Both inputs are clear Muting end condition: With muting sensor pair Muting Total Time: 5sec Concurrency monitoring time: 0 ms Sensor signal gap monitoring: 100 ms Sequence monitoring: Disabled Add. muting time when ESPE is clear: 0 ms C1 input: Without Override input: Without Conveyor input: Without Min. override pulse time: 100 ms

Report 6/6/2016 9:52:14 AM

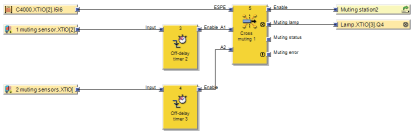

4.3.2.3. Door lock function

No	Name	Input	Output	Settings
6	OR	I.0 Single channel NO.XTIO[3].I6	O.0 Motor contactor.XTIO [1].Q1Q2	Input 1: Not inverted
		I.1 Single channel NO.XTIO[3].I4		Input 2: Not inverted
7	OR	I.0 Single channel NO.XTIO[3].I4	O.0 Motor contactor.XTIO [1].Q3Q4	Input 1: Not inverted
		I.1 Single channel NO.XTIO[3].I7		Input 2: Not inverted

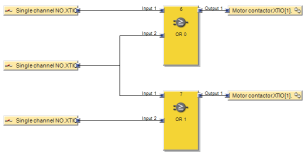

4.3.3. CPU0 - IO

		Tag name
24V		A1 CPU0[0] Power supply
0V		A2

4.3.3.1. Wiring diagram

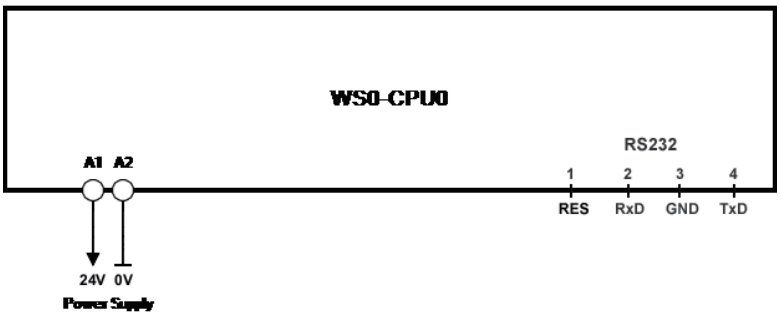

Page 9

Report 6/6/2016 9:52:14 AM

4.4. I/O module

4.4.1. XTIO[1]

4.4.1.1. General Information

Type code	Serial number	FW version	Hardware version	Version/Step	Address
WS0-XTIO	1530 0002	V 3.10.0	1.11	1.7.0.122 V 3.xx	1

4.4.1.2. Inputs

			Mode	Title / Tag name	ON-OFF	OFF-ON	Debounce time [ms]	Dis. [ms]	Test period [ms]	Test gap [ms]	Max. off-on delay [ms]
2	24V	I7		2 sensor muting ()	-	-	0	-	-	-	-
3	24V	I8		2 sensor muting ()	-	-	0	-	-	-	-
4	24V 24V	I1 I2		E-Stop, ES21 (Dual channel)	-	-	0	3000	-	-	-
5	24V 24V	I3 I4		E-Stop, ES21 (Dual channel)	-	-	0	3000	-	-	-
6	24V 24V	I5 I6		C4000 (Safety light curtain, type 4)	-	-	-	3000	-	-	-

4.4.1.3. Outputs

		Mode	Title / Tag name	Increased capacitive loads
7	Q1 Q2		Motor contactor (Dual channel)	Disabled
8	Q3 Q4		Motor contactor (Dual channel)	Disabled

4.4.1.4. Power Supply

			Title / Tag name
1	24V 0V	A1 A2	XTIO[1] Power supply

4.4.1.5. Wiring diagram

Page 10

Report 6/6/2016 9:52:14 AM

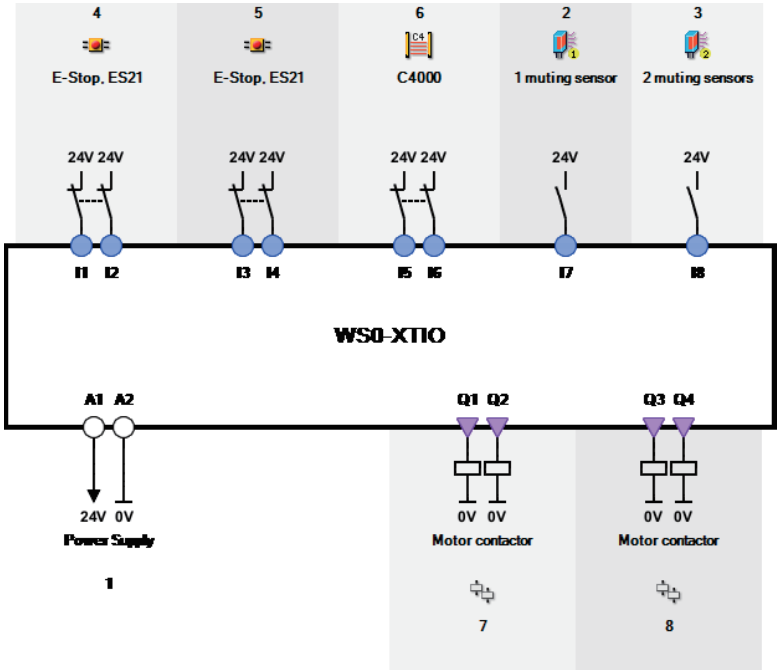

4.4.2. XTIO[2]

4.4.2.1. General Information

Type code	Serial number	FW version	Hardware version	Version/Step	Address
WS0-XTIO	1530 0004	V 3.10.0	1.11	1.7.0.122 V 3.xx	2

4.4.2.2. Inputs

			Mode	Title / Tag name	ON-OFF	OFF-ON	Debounce time [ms]	Dis. [ms]	Test period [ms]	Test gap [ms]	Max. off-on delay [ms]
2	24V	I7		2 sensor muting ()	-	-	0	-	-	-	-
3	24V	I8		2 sensor muting ()	-	-	0	-	-	-	-
7	24V 24V	I1 I2		Interlock (Dual channel)	-	-	0	3000	-	-	-
8	24V 24V	I3 I4		Interlock (Dual channel)	-	-	0	3000	-	-	-
9	24V 24V	I5 I6		C4000 (Safety light curtain, type 4)	-	-	-	3000	-	-	-

Page 11

Report 6/6/2016 9:52:14 AM

4.4.2.3. Outputs

		Mode	Title / Tag name	Increased capacitive loads
4		Q1	Interlock (Dual channel)	Disabled
5		Q2	Interlock (Dual channel)	Disabled
6		Q3	Lamp (Single channel)	Disabled

4.4.2.4. Power Supply

			Title / Tag name
1	24V 0V	A1 A2	XTIO[2] Power supply

4.4.2.5. Wiring diagram

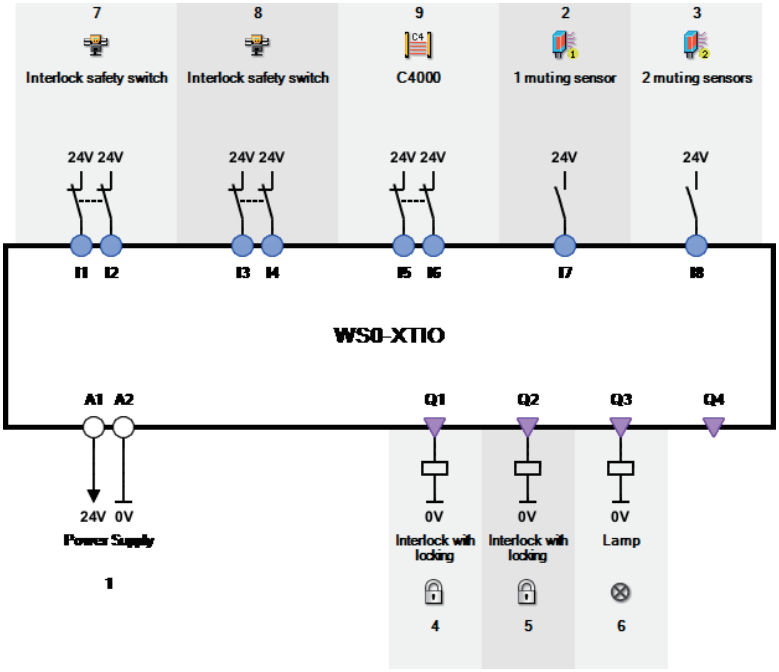

4.4.3. XTIO[3]

4.4.3.1. General Information

Report 6/6/2016 9:52:14 AM

Type code	Serial number	FW version	Hardware version	Version/Step	Address
WS0-XTIO	1530 0006	V 3.10.0	1.11	1.7.0.122 V 3.xx	3

4.4.3.2. Inputs

			Mode	Title / Tag name	ON-OFF	OFF-ON	Debounce time [ms]	Dis. [ms]	Test period [ms]	Test gap [ms]	Max. off-on delay [ms]
2	24V	I3		Reset (Single channel)	-	-	0	-	-	-	-
3	24V	I4		Single channel NO (Single channel)	-	-	0	-	-	-	-
4	24V	I5		EDM (Single channel)	-	-	0	-	-	-	-
5	24V	I6		Single channel NO (Single channel)	-	-	0	-	-	-	-
6	24V	I7		Single channel NO (Single channel)	-	-	0	-	-	-	-
9	24V 24V	I1 I2		S3000 (Safety laser scanner, type 3)	-	-	-	3000	-	-	-

4.4.3.3. Outputs

		Mode	Title / Tag name	Increased capacitive loads
7	Q3		Lamp (Single channel)	Disabled
8	Q4		Lamp (Single channel)	Disabled
10	Q1 Q2		Motor contactor (Dual channel)	Disabled

4.4.3.4. Power Supply

			Title / Tag name
1	24V 0V	A1 A2	XTIO[3] Power supply

4.4.3.5. Wiring diagram

Report 6/6/2016 9:52:14 AM

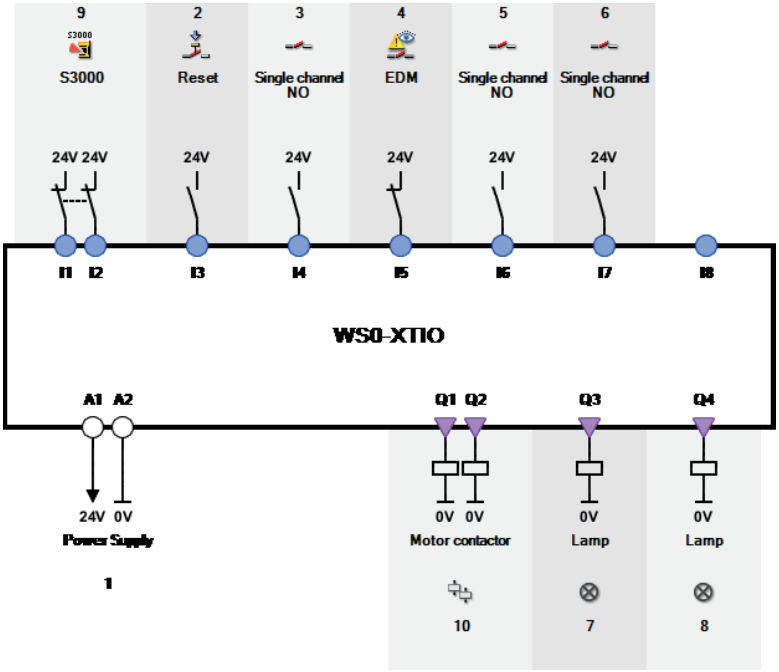

5. I/O overview

5.1. I/O module

XTIO[1]	Motor contactor.XTIO [1].Q1Q2	Door lock function	FB6 OR Output 1
	Motor contactor.XTIO [1].Q3Q4	Door lock function	FB7 OR Output 1
	C4000.XTIO [1].I5I6	Muting station 1	FB2 Cross muting ESPE
	1 muting sensor.XTIO [1].I7	Muting station 1	FB0 Off-delay timer Input
	2 muting sensors.XTIO [1].I8	Muting station 1	FB1 Off-delay timer Input

Page 14

Report 6/6/2016 9:52:14 AM

XTIO[2]		C4000.XTIO [2].I5I6	Muting station 2	FB5 Cross muting ESPE
		1 muting sensor.XTIO [2].I7	Muting station 2	FB3 Off-delay timer Input
		2 muting sensors.XTIO [2].I8	Muting station 2	FB4 Off-delay timer Input
XTIO[3]		Lamp.XTIO [3].Q3	Muting station 1	FB2 Cross muting Muting lamp
		Single channel NO.XTIO[3].I4	Door lock function	FB6 OR Input 2
			Door lock function	FB7 OR Input 1
		Lamp.XTIO [3].Q4	Muting station 2	FB5 Cross muting Muting lamp
		Single channel NO.XTIO[3].I6	Door lock function	FB6 OR Input 1
		Single channel NO.XTIO[3].I7	Door lock function	FB7 OR Input 2

Page 15

15.1.2 Example application Wood scanner

Report

SICK/Mitsubishi

Application name: CPU0 Module

SCID Tool: 0x08D5D022 - SCID Device: 0x08D5D022

Configuration date and time: 6/6/2016 10:12:00 AM

Report 6/6/2016 10:46:35 AM

Content

1. Bill of material....3
2. Diagnostics....4
3. Summary....4
   3.1. Module 0....4
   3.2. Module 1....4
   3.3. Module 2....4
4. Configuration....5
   4.1. Installed software components (Tool Version)....5
   4.2. General information....5
   4.3. CPU....6
      4.3.1. CPU0 - General information....6
      4.3.1.1. CRC values....6
      4.3.2. CPU logic....7
      4.3.2.1. seite 1....7
      4.3.2.2. seite 2....7
      4.3.3. CPU0 - IO....7
      4.3.3.1. Wiring diagram....7
   4.4. I/O module....8
      4.4.1. XTIO[1]....8
      4.4.1.1. General Information....8
      4.4.1.2. Inputs....8
      4.4.1.3. Outputs....8
      4.4.1.4. Power Supply....9
      4.4.1.5. Wiring diagram....9
      4.4.2. XTDI[2]....9
      4.4.2.1. General Information....9
      4.4.2.2. Inputs....10
      4.4.2.3. Wiring diagram....10
5. I/O overview....10
   5.1. I/O module....10

Report 6/6/2016 10:46:35 AM

1. Bill of material

0 1 2

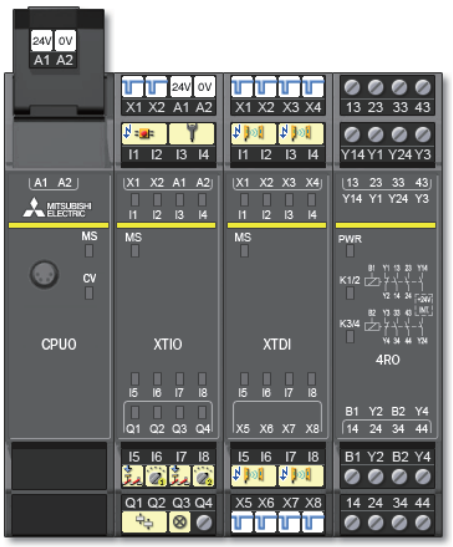

QTY	Title	Tag name	Part number	Internal item number	Description
1	CPU0	CPU0[0]	-		CPU0 Module
1	MPL0	Memory plug	-		MELSEC-WS Memory Plug 0
1	XTIO	XTIO[1]	-		XTIO input/output expansion module
1	Reset and EDM / Single channel	Reset and EDM.XTIO[1].I5			
1	Mode switch / 1 of 2	Mode switch.XTIO[1].I6/I8			
1	Reset and EDM / Single channel	Reset and EDM.XTIO[1].I7			
1	Lamp / Single channel	Lamp.XTIO[1].Q3			
1	E-Stop, ES21 / Dual channel	E-Stop, ES21.XTIO[1].I1I2			
1	Enabling switch / 2 position switch	Enabling switch.XTIO[1].I3I4			
1	Motor contactor / Dual channel	Motor contactor.XTIO[1].Q1Q2			
1	XTDI	XTDI[2]	-		XTDI input expansion module

Page 3

Report 6/6/2016 10:46:35 AM

QTY	Title	Tag name	Part number	Internal item number	Description
1	RE300 / Reed switch, dual channel, antivalent	RE300.XTDI[2].I1I2			
1	RE300 / Reed switch, dual channel, antivalent	RE300.XTDI[2].I3I4			
1	RE300 / Reed switch, dual channel, antivalent	RE300.XTDI[2].I5I6			
1	RE300 / Reed switch, dual channel, antivalent	RE300.XTDI[2].I7I8			
1	4RO	4RO	on request		Relay 4RO Module

2. Diagnostics

Current operation time: 89.11:01:31, power cycle: 516 - Current: 0, Historical: 0

No error history available.

3. Summary

3.1. Module 0

	Device:	Type code:	Serial number:	Firmware version:	Hardware version:	Version/ Step:	Operational status:
	CPU0	WS0-CPU0	1132 0435	V 2.01.0	1.00	1.7.0.122 V 2.xx	Online

3.2. Module 1

	Device:	Type code:	Serial number:	Firmware version:	Hardware version:	Version/ Step:	Operational status:
	XTIO	WS0-XTIO	1530 0002	V 3.10.0	1.11	1.7.0.122 V 3.xx	Online

3.3. Module 2

Report 6/6/2016 10:46:35 AM

	Device:	Type code:	Serial number:	Firmware version:	Hardware version:	Version/ Step:	Operational status:
	XTDI	WS0-XTDI	1530 0004	V 3.10.0	1.10	1.7.0.122 V 2.xx	Online

4. Configuration

4.1. Installed software components (Tool Version)

Basic components (station)	1.7.0.122
Software component for CPU0 and CPU1 CPU modules	1.7.0.122
Software component for 4RO relay module	1.7.0.122
Software component for GCC1 Network Modules	1.7.0.122
Software component for GETH network modules	1.7.0.122
Software component for XTDI extension module	1.7.0.122
Software component for XTIO extension module	1.7.0.122

4.2. General information

User group	Operator
Application name	CPU0 Module
Application description	
Configuration CRC	0x08D5D022
Device CRC	0x08D5D022
Configuration state	Verified
Device state	Verified
Configuration date	6/6/2016 10:12 AM

Page 5

Report 6/6/2016 10:46:35 AM

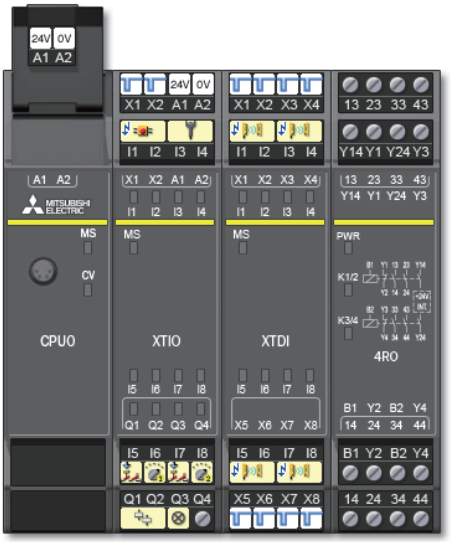

Module	Type code	Rev.	Address
CPU0	WS0-CPU0	V 2.xx	0
XTIO	WS0-XTIO	V 3.xx	1
XTDI	WS0-XTDI	V 2.xx	2
4RO	4RO	-	

4.3. CPU

4.3.1. CPU0 - General information

Type code	Serial number	FW version	Hardware version	Version/Step	Memory usage (UI/ Logic)	Address
WS0-CPU0 WS0-MPL	1132 0435 1524 0064	V 2.01.0 -	1.00 -	1.7.0.122 V 2.xx 1.7.0.122	2.65% / 3.32% -	0 -

4.3.1.1. CRC values

	Project CRC value	Device CRC value
Configuration CRC	0x08D5D022	0x08D5D022

Report 6/6/2016 10:46:35 AM

4.3.2. CPU logic

	Used
Function blocks	4
Execution time (ms)	4

4.3.2.1. seite 1

No	Name	Input	Output	Settings
0	Reset	I.0 Reset and EDM.XTIO [1].I5 I.1 E-Stop, ES21.XTIO [1].I1I2 I.2 Mode 1.XTIO[1].I6 I.3 RE300.XTDI[2].I1I2 I.4 RE300.XTDI[2].I3I4 I.5 RE300.XTDI[2].I5I6 I.6 RE300.XTDI[2].I7I8	O.0 Motor contactor.XTIO [1].Q1Q2 O.1 OR 1 -> I.0 -> Input 1 O.2 Not connected	Min. reset pulse time: 100 ms

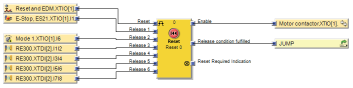

4.3.2.2. seite 2

No	Name	Input	Output	Settings
1	AND	I.0 Mode 2.XTIO[1].I8 I.1 Enabling switch.XTIO [1].I3I4	O.0 OR 1 -> I.1 -> Input 2	Input 1: Not inverted Input 2: Not inverted
2	OR	I.0 Reset 0 -> O.1 -> Release condition fulfilled I.1 AND 1 -> O.0 -> Output 1	O.0 Reset 2 -> I.1 -> Release 1	Input 1: Not inverted Input 2: Not inverted
3	Reset	I.0 Reset and EDM.XTIO [1].I7 I.1 OR 1 -> O.0 -> Output 1	O.0 Lamp.XTIO[1].Q3 O.1 Not connected O.2 Not connected	Min. reset pulse time: 100 ms

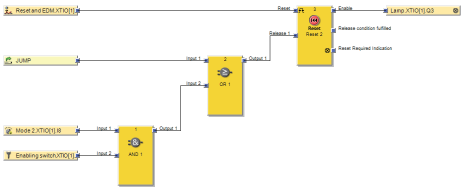

4.3.3. CPU0 - IO

		Tag name
24V	A1	CPU0[0] Power supply
0V	A2	

4.3.3.1. Wiring diagram

Page 7

Report 6/6/2016 10:46:35 AM

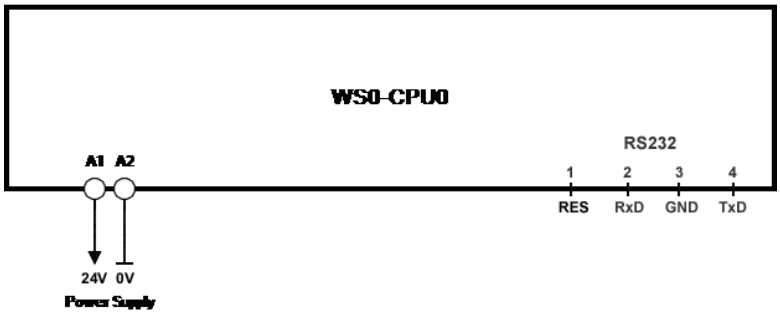

4.4. I/O module

4.4.1. XTIO[1]

4.4.1.1. General Information

Type code	Serial number	FW version	Hardware version	Version/Step	Address
WS0-XTIO	1530 0002	V 3.10.0	1.11	1.7.0.122 V 3.xx	1

4.4.1.2. Inputs

			Mode	Title / Tag name	ON-OFF	OFF-ON	Debounce time [ms]	Dis. [ms]	Test period [ms]	Test gap [ms]	Max. off-on delay [ms]
2	24V	I5		Reset and EDM (Single channel)	-	-	0	-	-	-	-
3	24V	I6		Mode switch (1 of 2)	-	-	0	-	-	-	-
5	24V	I8		Mode switch (1 of 2)	-	-	0	-	-	-	-
4	24V	I7		Reset and EDM (Single channel)	-	-	0	-	-	-	-
7	X1	I1		E-Stop, ES21 (Dual channel)	-	-	0	3000	200	1	-
	X2	I2							200	1	-
8	24V	I3		Enabling switch (2 position switch)	-	-	0	3000	-	-	-
	24V	I4									

4.4.1.3. Outputs

Page 8

Report 6/6/2016 10:46:35 AM

		Mode	Title / Tag name	Increased capacitive loads
6		Q3	Lamp (Single channel)	Disabled
9		Q1 Q2	Motor contactor (Dual channel)	Disabled

4.4.1.4. Power Supply

			Title / Tag name
1	24V 0V	A1 A2	XTIO[1] Power supply

4.4.1.5. Wiring diagram

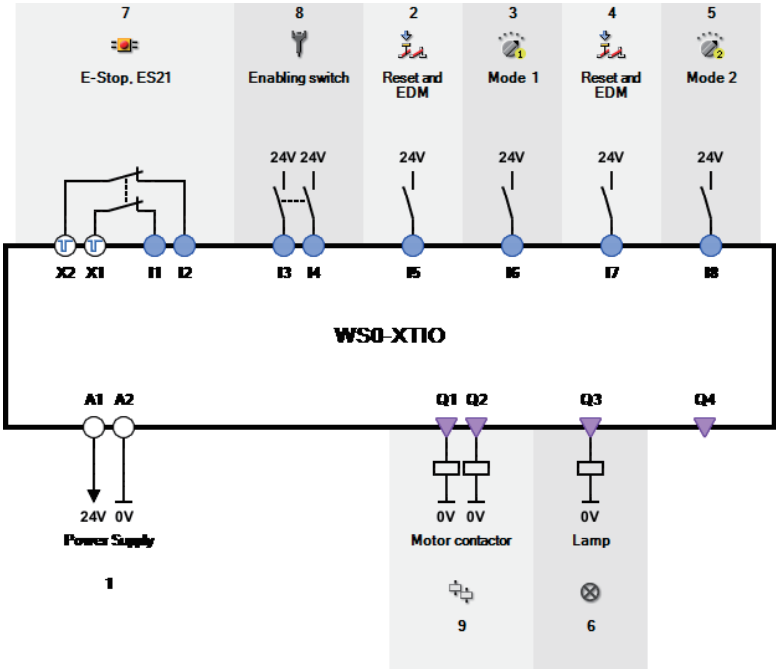

4.4.2. XTDI[2]

4.4.2.1. General Information

Type code	Serial number	FW version	Hardware version	Version/Step	Address
WS0-XTDI	1530 0004	V 3.10.0	1.10	1.7.0.122 V 2.xx	2

Page 9

Report 6/6/2016 10:46:35 AM

4.4.2.2. Inputs

			Mode	Title / Tag name	ON-OFF	OFF-ON	Debounce time [ms]	Dis. [ms]	Test period [ms]	Test gap [ms]	Max. off-on delay [ms]
1	X1 X2	I1 I2		RE300 (Reed switch, dual channel, antivalent)	-	-	0	1500	200 200	1 1	- -
2	X3 X4	I3 I4		RE300 (Reed switch, dual channel, antivalent)	-	-	0	1500	200 200	1 1	- -
3	X5 X6	I5 I6		RE300 (Reed switch, dual channel, antivalent)	-	-	0	1500	200 200	1 1	- -
4	X7 X8	I7 I8		RE300 (Reed switch, dual channel, antivalent)	-	-	0	1500	200 200	1 1	- -

4.4.2.3. Wiring diagram

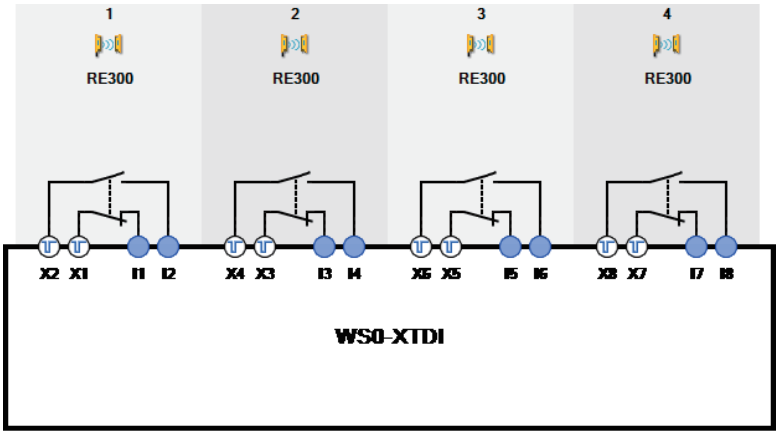

5. I/O overview

5.1. I/O module

Report 6/6/2016 10:46:35 AM

XTIO[1]		E-Stop, ES21.XTIO [1].I1I2	seite 1	FB0 Reset Release 1
		Motor contactor.XTIO [1].Q1Q2	seite 1	FB0 Reset Enable
		Enabling switch.XTIO [1].I3I4	seite 2	FB1 AND Input 2
		Lamp.XTIO [1].Q3	seite 2	FB3 Reset Enable
		Reset and EDM.XTIO [1].I5	seite 1	FB0 Reset Reset
		Mode 1.XTIO [1].I6	seite 1	FB0 Reset Release 2
		Reset and EDM.XTIO [1].I7	seite 2	FB3 Reset Reset
		Mode 2.XTIO [1].I8	seite 2	FB1 AND Input 1
XTDI[2]		RE300.XTDI [2].I1I2	seite 1	FB0 Reset Release 3
		RE300.XTDI [2].I3I4	seite 1	FB0 Reset Release 4
		RE300.XTDI [2].I5I6	seite 1	FB0 Reset Release 5
		RE300.XTDI [2].I7I8	seite 1	FB0 Reset Release 6

Page 11

15.1.3 Example application Ramp down detection

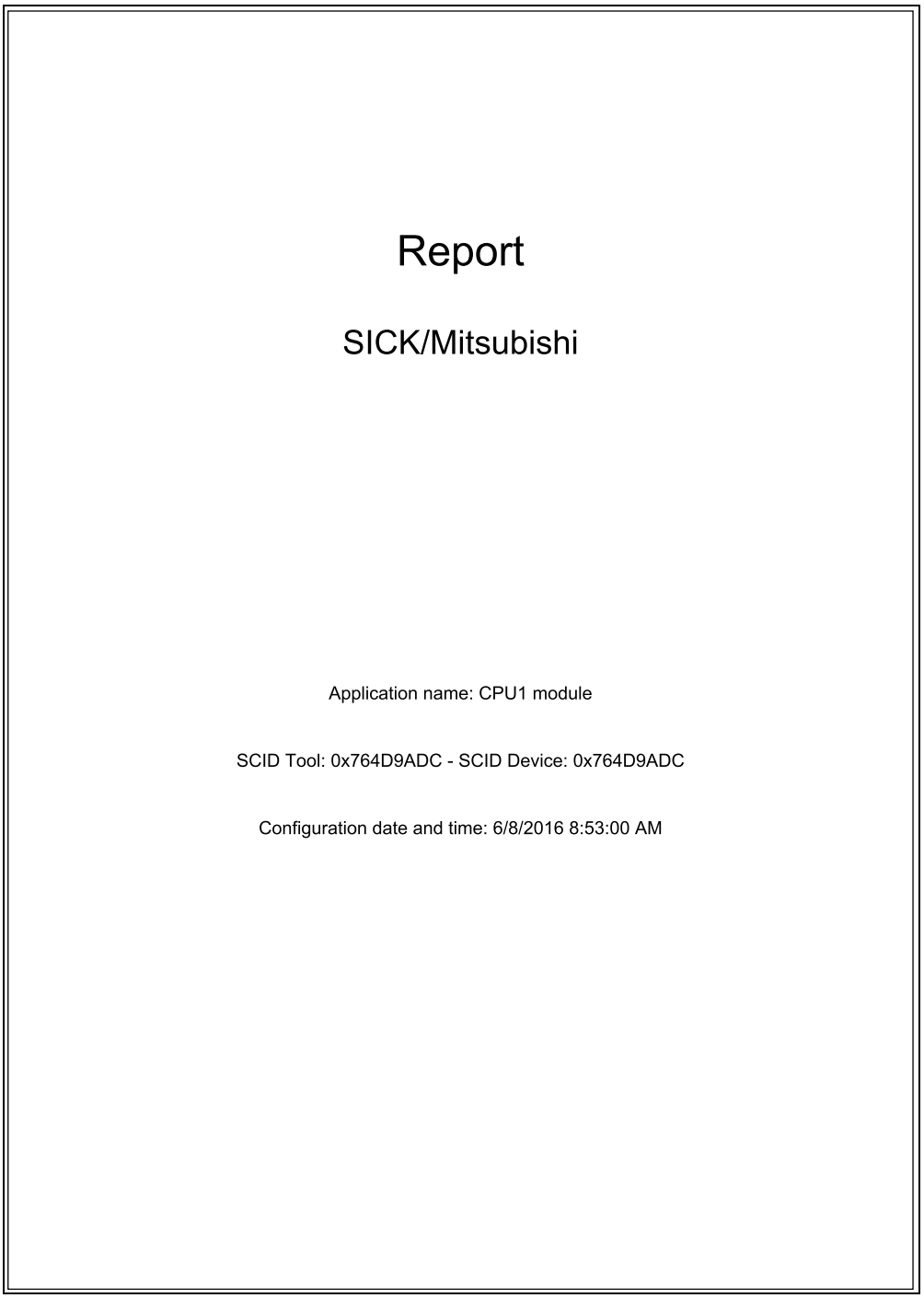

Report

SICK/Mitsubishi

Application name: CPU1 module

SCID Tool: 0x764D9ADC - SCID Device: 0x764D9ADC

Configuration date and time: 6/8/2016 8:53:00 AM

Report 6/8/2016 8:58:39 AM

Content

1. Bill of material....3
2. Diagnostics....4
3. Summary....4
   3.1. Module 0....4
   3.2. Module 1....4
4. Configuration....4
   4.1. Installed software components (Tool Version)....4
   4.2. General information....5
   4.3. CPU....5
      4.3.1. CPU1 - General information....6
      4.3.1.1. CRC values....6
      4.3.2. CPU logic....6
      4.3.2.1. seite 1....6
      4.3.3. CPU1 - IO....6
      4.3.3.1. Wiring diagram....7
      4.3.4. CPU1 - Routing....7
      4.3.4.1. CPU to RS232....7
      4.3.4.2. RS232 to CPU....7
   4.4. I/O module....8
      4.4.1. XTIO[1]....8
      4.4.1.1. General Information....8
      4.4.1.2. Inputs....8
      4.4.1.3. Outputs....8
      4.4.1.4. Power Supply....8
      4.4.1.5. Wiring diagram....8
5. I/O overview....9
   5.1. I/O module....9

Report 6/8/2016 8:58:39 AM

1. Bill of material

0 1

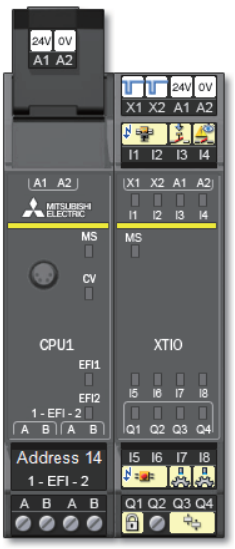

QTY	Title	Tag name	Part number	Internal item number	Description
1	CPU1	CPU1[0]	-		CPU1 module
1	MPL0	Memory plug	-		MELSEC-WS Memory Plug 0
1	XTIO	XTIO[1]	-		XTIO input/output expansion module
1	Reset / Single channel	Reset.XTIO[1].I3			
1	EDM / Single channel	EDM.XTIO[1].I4			
1	Inductive proximity switch / Single channel NO	Inductive proximity switch.XTIO[1].I7			
1	Inductive proximity switch / Single channel NO	Inductive proximity switch.XTIO[1].I8			
1	Interlock / Dual channel	Interlock.XTIO[1].Q1/I1I2			
1	E-Stop, ES21 / Dual channel	E-Stop, ES21.XTIO[1].I5I6			

Page 3

Report 6/8/2016 8:58:39 AM

QTY	Title	Tag name	Part number	Internal item number	Description
1	Motor contactor / Dual channel	Motor contactor.XTIO [1].Q3Q4			

2. Diagnostics

Current operation time: 17:39:44, power cycle: 66 - Current: 0, Historical: 0

No error history available.

3. Summary

3.1. Module 0

	Device:	Type code:	Serial number:	Firmware version:	Hardware version:	Version/ Step:	Operational status:
	CPU1	WS0-CPU1	1530 0003	V 3.02.0	4.00	1.7.0.122 V 3.xx	Online

3.2. Module 1

	Device:	Type code:	Serial number:	Firmware version:	Hardware version:	Version/ Step:	Operational status:
	XTIO	WS0-XTIO	1530 0002	V 3.10.0	1.11	1.7.0.122 V 3.xx	Online

4. Configuration

4.1. Installed software components (Tool Version)

Basic components (station)	1.7.0.122
Software component for CPU0 and CPU1 CPU modules	1.7.0.122
Software component for 4RO relay module	1.7.0.122
Software component for GCC1 Network Modules	1.7.0.122
Software component for GETH network modules	1.7.0.122
Software component for XTDI extension module	1.7.0.122

Page 4

Report 6/8/2016 8:58:39 AM

Software component for XTIO extension module	1.7.0.122

4.2. General information

User group	Administrator
Application name	CPU1 module
Application description	
Configuration CRC	0x764D9ADC
Device CRC	0x764D9ADC
Configuration state	Verified
Device state	Verified
Configuration date	6/8/2016 8:53 AM



Module	Type code	Rev.	Address
CPU1	WS0-CPU1	V 3.xx	0
XTIO	WS0-XTIO	V 3.xx	1

4.3. CPU

Page 5

Report 6/8/2016 8:58:39 AM

4.3.1. CPU1 - General information

Type code	Serial number	FW version	Hardware version	Version/Step	Memory usage (UI/ Logic)	Address
WS0-CPU1	1530 0003	V 3.02.0	4.00	1.7.0.122 V 3.xx	2.65% / 2.66%	0
WS0-MPL	1524 0064	-	-	1.7.0.122	-	-

4.3.1.1. CRC values

	Project CRC value	Device CRC value
Configuration CRC	0x764D9ADC	0x764D9ADC

4.3.2. CPU logic

	Used
Function blocks	3
Execution time (ms)	4

4.3.2.1. seite 1

No	Name	Input	Output	Settings
0	Reset	I.0 Reset.XTIO[1].I3 I.1 E-Stop, ES21.XTIO [1].I5I6 I.2 Interlock safety switch.XTIO[1].I1I2	O.0 EDM 0 -> I.2 -> Monitored input O.1 Not connected O.2 Not connected	Min. reset pulse time: 100 ms
1	EDM	I.0 EDM.XTIO[1].I4 I.2 Reset 0 -> O.0 -> Enable	O.0 Not connected O.1 Ramp down detection 0 -> I.0 -> Drive released O.1 Motor contactor.XTIO [1].Q3Q4 O.2 Not connected	Max. feedback delay: 300 ms
2	Ramp down detection	I.0 EDM 0 -> O.1 -> Output 1 I.1 Inductive proximity switch.XTIO[1].I7 I.2 Inductive proximity switch.XTIO[1].I8	O.0 Interlock with locking.XTIO[1].Q1	Number of incremental inputs: 1 pair of encoder inputs Input plausibility checks: Disabled Min. time between signal changes: 1000 (x 10 ms) = 10000 ms

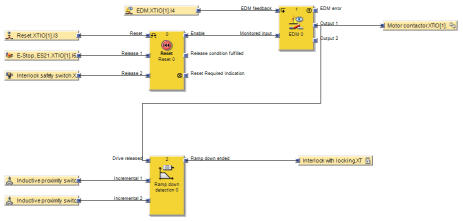

4.3.3. CPU1 - IO

			Tag name	System integrity test based on type key	System integrity test based on serial number	System integrity test based on configuration date
24V 0V		A1 A2	CPU1[0] Power supply	-	-	-

Report 6/8/2016 8:58:39 AM

4.3.3.1. Wiring diagram

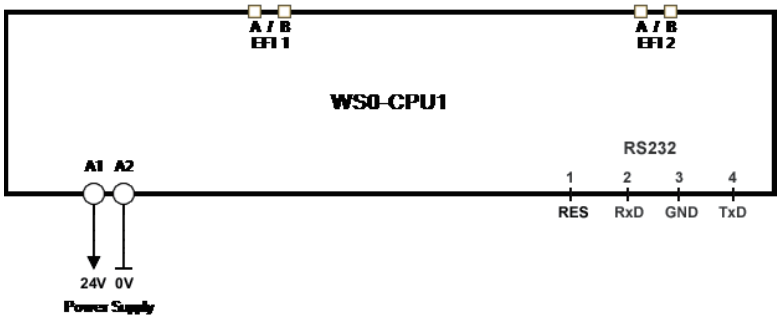

4.3.4. CPU1 - Routing

4.3.4.1. CPU to RS232

[0-99]

[Byte 0] Module 0 [XTIO[1]]							
[0.7]	Inductive proximity switch.XTIO[1].I8	[0.6]	Inductive proximity switch.XTIO[1].I7	[0.5]	-	[0.4]	E-Stop, ES21.XTIO [1].I5I6
[0.3]	EDM.XTIO[1].I4	[0.2]	Reset.XTIO[1].I3	[0.1]	-	[0.0]	Interlock safety switch.XTIO[1].I1I2

[Byte 12] Module 0 [XTIO[1]]							
[12.7]		[12.6]		[12.5]		[12.4]	
[12.3]	-	[12.2]	Motor contactor.XTIO [1].Q3Q4	[12.1]		[12.0]	Interlock with locking.XTIO[1].Q1

[Byte 24] Byte 0							
[24.7]	結果 0.7	[24.6]	結果 0.6	[24.5]	結果 0.5	[24.4]	結果 0.4
[24.3]	結果 0.3	[24.2]	結果 0.2	[24.1]	結果 0.1	[24.0]	結果 0.0

4.3.4.2. RS232 to CPU

[0-3]

[0] Byte 0							
[0.7]	RS232 0.7	[0.6]	RS232 0.6	[0.5]	RS232 0.5	[0.4]	RS232 0.4
[0.3]	RS232 0.3	[0.2]	RS232 0.2	[0.1]	RS232 0.1	[0.0]	RS232 0.0

[1] Byte 1							
[1.7]	RS232 1.7	[1.6]	RS232 1.6	[1.5]	RS232 1.5	[1.4]	RS232 1.4
[1.3]	RS232 1.3	[1.2]	RS232 1.2	[1.1]	RS232 1.1	[1.0]	RS232 1.0

Page 7

Report 6/8/2016 8:58:39 AM

[2] Byte 2							
[2.7]	RS232 2.7	[2.6]	RS232 2.6	[2.5]	RS232 2.5	[2.4]	RS232 2.4
[2.3]	RS232 2.3	[2.2]	RS232 2.2	[2.1]	RS232 2.1	[2.0]	RS232 2.0
[3] Byte 3							
[3.7]	RS232 3.7	[3.6]	RS232 3.6	[3.5]	RS232 3.5	[3.4]	RS232 3.4
[3.3]	RS232 3.3	[3.2]	RS232 3.2	[3.1]	RS232 3.1	[3.0]	RS232 3.0

4.4. I/O module

4.4.1. XTIO[1]

4.4.1.1. General Information

Type code	Serial number	FW version	Hardware version	Version/Step	Address
WS0-XTIO	1530 0002	V 3.10.0	1.11	1.7.0.122 V 3.xx	1

4.4.1.2. Inputs

			Mode	Title / Tag name	ON-OFF	OFF-ON	Debounce time [ms]	Dis. [ms]	Test period [ms]	Test gap [ms]	Max. off-on delay [ms]
2	24V	I3		Reset (Single channel)	-	-	0	-	-	-	-
3	24V	I4		EDM (Single channel)	-	-	0	-	-	-	-
4	24V	I7		Inductive proximity switch (Single channel NO)	-	-	0	-	-	-	-
5	24V	I8		Inductive proximity switch (Single channel NO)	-	-	0	-	-	-	-
7	X1	I1		Interlock (Dual channel)	-	-	0	3000	200	1	-
	X2	I2							200	1	-
8	X1	I5		E-Stop, ES21 (Dual channel)	-	-	0	3000	200	1	-
	X2	I6							200	1	-

4.4.1.3. Outputs

		Mode	Title / Tag name	Increased capacitive loads
6	Q1		Interlock (Dual channel)	Disabled
9	Q3		Motor contactor (Dual channel)	Disabled
	Q4			

4.4.1.4. Power Supply

			Title / Tag name
1	24V	A1	XTIO[1] Power supply
	0V	A2	

4.4.1.5. Wiring diagram

Page 8

Report 6/8/2016 8:58:39 AM

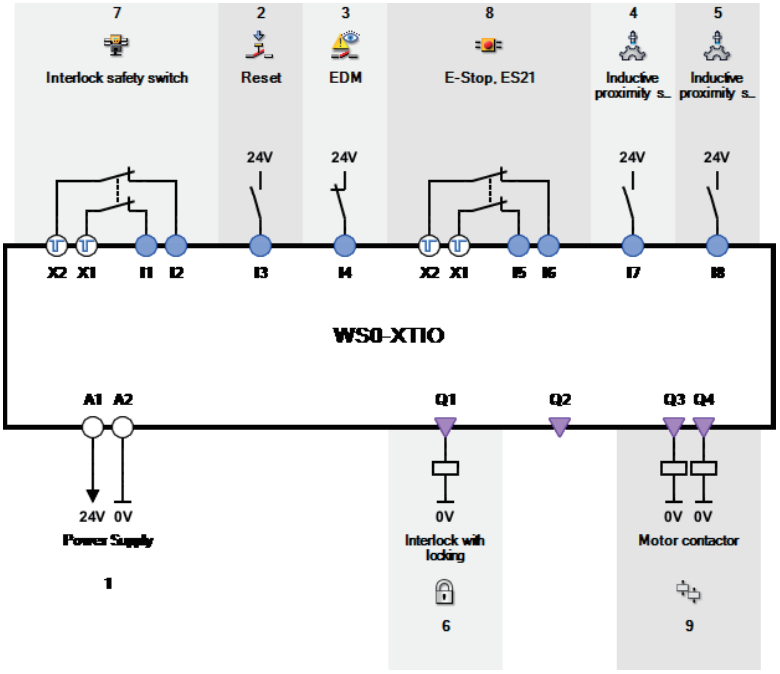

5. I/O overview

5.1. I/O module

XTIO[1]		Interlock safety switch.XTIO [1].I1I2	seite 1	FB0 Reset Release 2
		Interlock with locking.XTIO [1].Q1	seite 1	FB2 Ramp down detection Ramp down ended
		Reset.XTIO [1].I3	seite 1	FB0 Reset Reset
		Motor contactor.XTIO [1].Q3Q4	seite 1	FB1 EDM Output 1
		EDM.XTIO [1].I4	seite 1	FB1 EDM EDM feedback
		E-Stop, ES21.XTIO [1].I5I6	seite 1	FB0 Reset Release 1

Page 9

Report 6/8/2016 8:58:39 AM

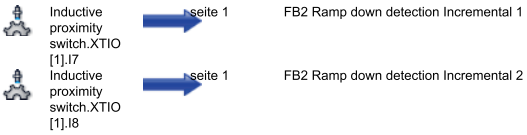

Page 10

15.2 List of function block status in simulation mode

Table 117 lists the function block status displayed in the FB Preview window.

Table 117:
List of function block status in simulation mode

Function block status
Bottom dead center (BDC) left first time
Bottom dead center (BDC) reached first time
Bottom dead center (BDC) left second time
Bottom dead center (BDC) reached second time
Active
Discrepancy error
Edge detected
Error
Wait for function test
Inactive
Monitoring disabled
Muting active
No edge detected
Off delay
On delay
OK
Upper counter limit reached
Overrun Cam left
Overrun Cam reached
Override Required
Wait for reset/restart pulse
Output Enable is active
Wait for all monitored inputs becoming active
Drive is enabled
Run-up Cam reached
Drive stopped
Top dead center (TDC) left
Top dead center (TDC) reached
User mode is changing
User mode is valid
Lower counter limit reached
Valve 1 is active
Valve 2 is active
Wait for feedback
Drive is coasting

15.3 Precautions

(1) Edit a CSV file exported from Setting and Monitoring tool in a text editor.

15.4 SICK contact

More representatives and agencies in all major industrialnations at www.sick.com

Australia
Phone +61 3 9497 4100
1800 33 48 02 – tollfree
E-Mail sales@sick.com.au

Belgium/Luxembourg
Phone +32 (0)2 466 55 66
E-Mail info@sick.be

Brasil
Phone +55 11 3215-4900
E-Mail sac@sick.com.br

CeskáRepublika
Phone +420 2 57 91 18 50
E-Mail sick@sick.cz

China
Phone +852-2763 6966
E-Mail ghk@sick.com.hk

Danmark
Phone +45 45 82 64 00
E-Mail sick@sick.dk

Deutschland
Phone +49 211 5301-260
E-Mail info@sick.de

España
Phone +34 93 480 31 00
E-Mail info@sick.es

France
Phone +33 1 64 62 35 00
E-Mail info@sick.fr

GreatBritain
Phone +44 (0)1727 831121
E-Mail info@sick.co.uk

India
Phone +91-22-4033 8333
E-Mail info@sick-india.com

Israel
Phone +972-4-9990590
E-Mail info@sick-sensors.com

Italia
Phone +39 02 27 43 41
E-Mail info@sick.it

Japan
Phone +81 (0)3 3358 1341
E-Mail support@sick.jp

Nederlands
Phone +31 (0)30 229 25 44
E-Mail info@sick.nl

Norge
Phone +47 67 81 50 00
E-Mail austefjord@sick.no

Österreich
Phone +43 (0)22 36 62 28 8-0
E-Mail office@sick.at

Polska
Phone +48 22 837 40 50
E-Mail info@sick.pl

Republic of Korea
Phone +82-2 786 6321/4
E-Mail kang@sickkorea.net

Republika Slovenija
Phone +386 (0)1-47 69 990
E-Mail office@sick.si

Romania
Phone +40356171120
E-Mail office@sick.ro

Russia
Phone +7-495-775-05-34
E-Mail info@sick-automation.ru

Schweiz
Phone +41 41 619 29 39
E-Mail contact@sick.ch

Singapore
Phone +65 6744 3732
E-Mail admin@sicksgp.com.sg

Suomi
Phone +358-9-25 15 800
E-Mail sick@sick.fi

Sverige
Phone +46 10 110 10 00
E-Mail info@sick.se

Taiwan
Phone +886 2 2375 -6288
E-Mail sales@sick.com.tw

Türkiye
Phone +90 216 587 74 00
E-Mail info@sick.com.tr

United Arab Emirates
Phone + 971 4 8865 878
E-Mail info@sick.ae

USA/Canada/México
Phone +1(952) 941- 6780
1800-325-7425 – tollfree
E-Mail info@sickusa.com

WARRANTY

1. Limited Warranty and Product Support.

a. Mitsubishi Electric Company ("MELCO") warrants that for a period of eighteen (18) months after date of delivery from the point of manufacture or one year from date of Customer's purchase, whichever is less, Mitsubishi Safety Controller (the "Products") will be free from defects in material and workmanship.

b. At MELCO's option, for those Products MELCO determines are not as warranted, MELCO shall either repair or replace them or issue a credit or return the purchase price paid for them.

c. For this warranty to apply:
   (1) Customer shall give MELCO (i) notice of a warranty claim to MELCO and the authorized dealer or distributor from whom the Products were purchased, (ii) the notice shall describe in reasonable details the warranty problem, (iii) the notice shall be provided promptly and in no event later than thirty (30) days after the Customer knows or has reason to believe that Products are not as warranted, and (iv) in any event, the notice must given within the warranty period;
   (2) Customer shall cooperate with MELCO and MELCO's representatives in MELCO's investigation of the warranty claim, including preserving evidence of the claim and its causes, meaningfully responding to MELCO's questions and investigation of the problem, grant MELCO access to witnesses, personnel, documents, physical evidence and records concerning the warranty problem, and allow MELCO to examine and test the Products in question offsite or at the premises where they are installed or used; and
   (3) If MELCO requests, Customer shall remove Products it claims are defective and ship them to MELCO or MELCO's authorized representative for examination and, if found defective, for repair or replacement. The costs of removal, shipment to and from MELCO's designated examination point, and reinstallation of repaired or replaced Products shall be at Customer's expense.
   (4) If Customer requests and MELCO agrees to effect repairs onsite at any domestic or overseas location, the Customer will pay for the costs of sending repair personnel and shipping parts. MELCO is not responsible for any re-commissioning, maintenance, or testing on-site that involves repairs or replacing of the Products.

d. Repairs of Products located outside of Japan are accepted by MELCO's local authorized service facility centers ("FA Centers"). Terms and conditions on which each FA Center offers repair services for Products that are out of warranty or not covered by MELCO's limited warranty may vary.

e. Subject to availability of spare parts, MELCO will offer Product repair services for (4) years after each Product model or line is discontinued, at MELCO's or its FA Centers' rates and charges and standard terms in effect at the time of repair. MELCO usually produces and retains sufficient spare parts for repairs of its Products for a period of four (4) years after production is discontinued.

f. MELCO generally announces discontinuation of Products through MELCO's Technical Bulletins. Products discontinued and repair parts for them may not be available after their production is discontinued.

2. Limits of Warranties.

a. MELCO does not warrant or guarantee the design, specify, manufacture, construction or installation of the materials, construction criteria, functionality, use, properties or other characteristics of the equipment, systems, or production lines into which the Products may be incorporated, including any safety, fail-safe and shut down systems using the Products.

b. MELCO is not responsible for determining the suitability of the Products for their intended purpose and use, including determining if the Products provide appropriate safety margins and redundancies for the applications, equipment or systems into which they are incorporated.

c. Customer acknowledges that qualified and experienced personnel are required to determine the suitability, application, design, construction and proper installation and integration of the Products. MELCO does not supply such personnel.

d. MELCO is not responsible for designing and conducting tests to determine that the Product functions appropriately and meets application standards and requirements as installed or incorporated into the end-user's equipment, production lines or systems.

e. MELCO does not warrant any Product:
   (1) repaired or altered by persons other than MELCO or its authorized engineers or FA Centers;
   (2) subjected to negligence, carelessness, accident, misuse, or damage;
   (3) improperly stored, handled, installed or maintained;
   (4) integrated or used in connection with improperly designed, incompatible or defective hardware or software;
   (5) that fails because consumable parts such as relay, batteries, backlights, or fuses were not tested, serviced or replaced;
   (6) operated or used with equipment, production lines or systems that do not meet applicable and commensurate legal, safety and industry-accepted standards;
   (7) operated or used in abnormal applications;
   (8) installed, operated or used in contravention of instructions, precautions or warnings contained in MELCO's user, instruction and/or safety manuals, technical bulletins and guidelines for the Products;
   (9) used with obsolete technologies or technologies not fully tested and widely accepted and in use at the time of the Product's manufacture;
   (10) subjected to excessive heat or moisture, abnormal voltages, shock, excessive vibration, physical damage or other improper environment; or
   (11) damaged or malfunctioning due to Acts of God, fires, acts of vandals, criminals or terrorists, communication or power failures, or any other cause or failure that results from circumstances beyond MELCO's control.

f. All Product information and specifications contained on MELCO's website and in catalogs, manuals, or technical information materials provided by MELCO are subject to change without prior notice.

g. The Product information and statements contained on MELCO's website and in catalogs, manuals, technical bulletins or other materials provided by MELCO are provided as a guide for Customer's use. They do not constitute warranties and are not incorporated in the contract of sale for the Products.

h. These terms and conditions constitute the entire agreement between Customer and MELCO with respect to warranties, remedies and damages and supersede any other understandings, whether written or oral, between the parties. Customer expressly acknowledges that any representations or statements made by MELCO or others concerning the Products outside these terms are not part of the basis of the bargain between the parties and are not factored into the pricing of the Products.
i. THE WARRANTIES AND REMEDIES SET FORTH IN THESE TERMS ARE THE EXCLUSIVE AND ONLY WARRANTIES AND REMEDIES THAT APPLY TO THE PRODUCTS.
j. MELCO DISCLAIMS THE IMPLIED WARRANTIES OF MERCHANTABILITY AND FITNESS FOR A PARTICULAR PURPOSE.

3. Limits on Damages.

a. MELCO'S MAXIMUM CUMULATIVE LIABILITY BASED ON ANY CLAIMS FOR BREACH OF WARRANTY OR CONTRACT, NEGLIGENCE, STRICT TORT LIABILITY OR OTHER THEORIES OF RECOVERY REGARDING THE SALE, REPAIR, REPLACEMENT, DELIVERY, PERFORMANCE, CONDITION, SUITABILITY, COMPLIANCE, OR OTHER ASPECTS OF THE PRODUCTS OR THEIR SALE, INSTALLATION OR USE SHALL BE LIMITED TO THE PRICE PAID FOR PRODUCTS NOT AS WARRANTED.
b. Although MELCO has obtained the certification for Product's compliance to the international safety standards IEC61508 and ISO13849-1 from TUV Rheinland, this fact does not guarantee that Product will be free from any malfunction or failure. The user of this Product shall comply with any and all applicable safety standard, regulation or law and take appropriate safety measures for the system in which the Product is installed or used and shall take the second or third safety measures other than the Product. MELCO is not liable for damages that could have been prevented by compliance with any applicable safety standard, regulation or law.
c. MELCO prohibits the use of Products with or in any application involving power plants, trains, railway systems, airplanes, airline operations, other transportation systems, amusement equipments, hospitals, medical care, dialysis and life support facilities or equipment, incineration and fuel devices, handling of nuclear or hazardous materials or chemicals, mining and drilling, and other applications where the level of risk to human life, health or property are elevated.
d. MELCO SHALL NOT BE LIABLE FOR SPECIAL, INCIDENTAL, CONSEQUENTIAL, INDIRECT OR PUNITIVE DAMAGES, FOR LOSS OF PROFITS, SALES, OR REVENUE, FOR INCREASED LABOR OR OVERHEAD COSTS, FOR DOWNTIME OR LOSS OF PRODUCTION, FOR COST OVERRUNS, OR FOR ENVIRONMENTAL OR POLLUTION DAMAGES OR CLEAN-UP COSTS, WHETHER THE LOSS IS BASED ON CLAIMS FOR BREACH OF CONTRACT OR WARRANTY, VIOLATION OF STATUTE, NEGLIGENCE OR OTHER TORT, STRICT LIABILITY OR OTHERWISE.
e. In the event that any damages which are asserted against MELCO arising out of or relating to the Products or defects in them, consist of personal injury, wrongful death and/or physical property damages as well as damages of a pecuniary nature, the disclaimers and limitations contained in these terms shall apply to all three types of damages to the fullest extent permitted by law. If, however, the personal injury, wrongful death and/or physical property damages cannot be disclaimed or limited by law or public policy to the extent provided by these terms, then in any such event the disclaimer of and limitations on pecuniary or economic consequential and incidental damages shall nevertheless be enforceable to the fullest extent allowed by law.
f. In no event shall any cause of action arising out of breach of warranty or otherwise concerning the Products be brought by Customer more than one year after the cause of action accrues.
g. Each of the limitations on remedies and damages set forth in these terms is separate and independently enforceable, notwithstanding the unenforceability or failure of essential purpose of any warranty, undertaking, damage limitation, other provision of these terms or other terms comprising the contract of sale between Customer and MELCO.

4. Delivery/Force Majeure.

a. Any delivery date for the Products acknowledged by MELCO is an estimated and not a promised date. MELCO will make all reasonable efforts to meet the delivery schedule set forth in Customer's order or the purchase contract but shall not be liable for failure to do so.
b. Products stored at the request of Customer or because Customer refuses or delays shipment shall be at the risk and expense of Customer.
c. MELCO shall not be liable for any damage to or loss of the Products or any delay in or failure to deliver, service, repair or replace the Products arising from shortage of raw materials, failure of suppliers to make timely delivery, labor difficulties of any kind, earthquake, fire, windstorm, flood, theft, criminal or terrorist acts, war, embargoes, governmental acts or rulings, loss or damage or delays in carriage, acts of God, vandals or any other circumstances reasonably beyond MELCO's control.

5. Choice of Law/Jurisdiction.

These terms and any agreement or contract between Customer and MELCO shall be governed by the laws of the State of New York without regard to conflicts of laws. To the extent any action or dispute is not arbitrated, the parties consent to the exclusive jurisdiction and venue of the federal and state courts located in the Southern District of the State of New York. Any judgment there obtained may be enforced in any court of competent jurisdiction.

6. Arbitration.

Any controversy or claim arising out of, or relating to or in connection with the Products, their sale or use or these terms, shall be settled by arbitration conducted in accordance with the Center for Public Resources (CPR) Rules for Non-Administered Arbitration of International Disputes, by a sole arbitrator chosen from the CPR's panels of distinguished neutrals. Judgment upon the award rendered by the Arbitrator shall be final and binding and may be entered by any court having jurisdiction thereof. The place of the arbitration shall be New York City, New York. The language of the arbitration shall be English. The neutral organization designated to perform the functions specified in Rule 6 and Rules 7.7(b), 7.8 and 7.9 shall be the CPR.

INFORMATION AND SERVICES

For further information and services, please contact your local Mitsubishi Electric sales office or representative.
Visit our website to find our locations worldwide.

MITSUBISHI ELECTRIC Factory Automation Global Website
Locations Worldwide
www.MitsubishiElectric.com/fa/about-us/overseas/

TRADEMARKS

Microsoft, Excel, and Windows are trademarks of the Microsoft group of companies.
The company names, system names and product names mentioned in this manual are either registered trademarks or trademarks of their respective companies.

In some cases, trademark symbols such as '™' or '®' are not specified in this manual.

TRANSLATION OF THE ORIGINAL INSTRUCTIONS

SH(NA)-080856ENG-L(2509)MEE
MODEL: SW1DNN-WS0ADR-B-O-E

MITSUBISHI ELECTRIC CORPORATION

HEAD OFFICE: TOKYO BLDG., 2-7-3, MARUNOUCHI, CHIYODA-KU, TOKYO 100-8310, JAPAN
NAGOYA WORKS: 1-14, YADA-MINAMI 5-CHOME, HIGASHI-KU, NAGOYA 461-8670, JAPAN

When exported from Japan, this manual does not require application to the Ministry of Economy, Trade and Industry for service transaction permission.

Specifications subject to change without notice.