MITSUBISHI ELECTRIC

Programmable Controller

MELSEC Q series

QCPU User's Manual (Hardware Design, Maintenance and Inspection)

-Q00(J)CPU
-Q01CPU
-Q02(H)CPU
-Q06HCPU
-Q12HCPU
-Q25HCPU
-Q02PHCPU
-Q06PHCPU
-Q12PHCPU
-Q25PHCPU
-Q12PRHCPU
-Q25PRHCPU
-Q00U(J)CPU
-Q01UCPU
-Q02UCPU
-Q03UD(E)CPU
-Q03UDVCPU
-Q04UD(E)HCPU
-Q04UDVCPU
-Q04UDPVCPU
-Q06UD(E)HCPU
-Q06UDVCPU
-Q06UDPVCPU
-Q10UD(E)HCPU
-Q13UD(E)HCPU
-Q13UDVCPU
-Q13UDPVCPU
-Q20UD(E)HCPU
-Q26UD(E)HCPU
-Q26UDVCPU
-Q26UDPVCPU
-Q50UDEHCPU
-Q100UDEHCPU

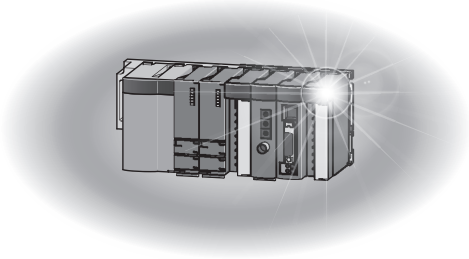

●SAFETY PRECAUTIONS●

(Read these precautions before using this product.)

Before using this product, please read this manual and the relevant manuals carefully and pay full attention to safety to handle the product correctly.

In this manual, the safety precautions are classified into two levels: "⚠WARNING" and "⚠CAUTION".

⚠WARNING	Indicates that incorrect handling may cause hazardous conditions, resulting in death or severe injury.
⚠CAUTION	Indicates that incorrect handling may cause hazardous conditions, resulting in minor or moderate injury or property damage.

Under some circumstances, failure to observe the precautions given under "⚠CAUTION" may lead to serious consequences.
Observe the precautions of both levels because they are important for personal and system safety.
Make sure that the end users read this manual and then keep the manual in a safe place for future reference.

[Design Precautions]

⚠ WARNING

● Configure safety circuits external to the programmable controller to ensure that the entire system operates safely even when a fault occurs in the external power supply or the programmable controller. Failure to do so may result in an accident due to an incorrect output or malfunction.

(1) Configure external safety circuits, such as an emergency stop circuit, protection circuit, and protective interlock circuit for forward/reverse operation or upper/lower limit positioning.

(2) The programmable controller stops its operation upon detection of the following status, and the output status of the system will be as shown below.

	Q series module	AnS/A series module
Overcurrent or overvoltage protection of the power supply module is activated.	All outputs are turned off	All outputs are turned off
The CPU module detects an error such as a watchdog timer error by the self-diagnostic function.	All outputs are held or turned off according to the parameter setting.	All outputs are turned off

All outputs may turn on when an error occurs in the part, such as I/O control part, where the CPU module cannot detect any error. To ensure safety operation in such a case, provide a safety mechanism or a fail-safe circuit external to the programmable controller. For a fail-safe circuit example, refer to Page 693, Appendix 9.

(3) Outputs may remain on or off due to a failure of an output module relay or transistor. Configure an external circuit for monitoring output signals that could cause a serious accident.

[Design Precautions]

⚠ WARNING

- In an output module, when a load current exceeding the rated current or an overcurrent caused by a load short-circuit flows for a long time, it may cause smoke and fire. To prevent this, configure an external safety circuit, such as a fuse.
- Configure a circuit so that the programmable controller is turned on first and then the external power supply. If the external power supply is turned on first, an accident may occur due to an incorrect output or malfunction.
- For the operating status of each station after a communication failure, refer to relevant manuals for the network. Incorrect output or malfunction due to a communication failure may result in an accident.
- When changing data of the running programmable controller from a peripheral connected to the CPU module or from a personal computer connected to an intelligent function module, configure an interlock circuit in the sequence program to ensure that the entire system will always operate safely. For program modification and operating status change, read relevant manuals carefully and ensure the safety before operation. Especially, in the case of a control from an external device to a remote programmable controller, immediate action cannot be taken for a problem on the programmable controller due to a communication failure. To prevent this, configure an interlock circuit in the sequence program, and determine corrective actions to be taken between the external device and CPU module in case of a communication failure.

[Design Precautions]

⚠ CAUTION

- Do not install the control lines or communication cables together with the main circuit lines or power cables. Keep a distance of 100mm or more between them. Failure to do so may result in malfunction due to noise.
- When a device such as a lamp, heater, or solenoid valve is controlled through an output module, a large current (approximately ten times greater than normal) may flow when the output is turned from off to on. Take measures such as replacing the module with one having a sufficient current rating.
- After the CPU module is powered on or is reset, the time taken to enter the RUN status varies depending on the system configuration, parameter settings, and/or program size. Design circuits so that the entire system will always operate safely, regardless of the time.

[Security Precautions]

⚠ WARNING

- To maintain the security (confidentiality, integrity, and availability) of the programmable controller and the system against unauthorized access, denial-of-service (DoS) attacks, computer viruses, and other cyberattacks from external devices via the network, take appropriate measures such as firewalls, virtual private networks (VPNs), and antivirus solutions.

[Installation Precautions]

⚠ CAUTION

- Use the programmable controller in an environment that meets the general specifications in this manual. Failure to do so may result in electric shock, fire, malfunction, or damage to or deterioration of the product.
- To mount the module, while pressing the module mounting lever in the lower part of the module, fully insert the module fixing projection(s) into the hole(s) in the base unit and press the module until it snaps into place. Incorrect mounting may cause malfunction, failure, or drop of the module. When using the programmable controller in an environment of frequent vibrations, fix the module with a screw. Tighten the screw within the specified torque range. Undertightening can cause drop of the screw, short circuit or malfunction. Overtightening can damage the screw and/or module, resulting in drop, short circuit, or malfunction.
- When using an extension cable, connect it to the extension cable connector of the base unit securely. Check the connection for looseness. Poor contact may cause incorrect input or output.
- When using a memory card, fully insert it into the memory card slot. Check that it is inserted completely. Poor contact may cause malfunction.
- When using an SD memory card, fully insert it into the SD memory card slot. Check that it is inserted completely. Poor contact may cause malfunction.
- When using an extended SRAM cassette, fully insert it into the connector for cassette connection of the CPU module. Close the cassette cover after inserting to avoid looseness of the extended SRAM cassette. Poor contact may cause malfunction.
- Shut off the external power supply (all phases) used in the system before mounting or removing the module. Failure to do so may result in damage to the product. A module can be replaced online (while power is on) on any MELSECNET/H remote I/O station or in the system where a CPU module supporting the online module change function is used. Note that there are restrictions on the modules that can be replaced online, and each module has its predetermined replacement procedure. For details, refer to this manual and in the manual for the corresponding module.
- Do not directly touch any conductive part of the module, the memory card, the SD memory card, or the extended SRAM cassette. Doing so can cause malfunction or failure of the module.
- When using a Motion CPU module and modules designed for motion control, check that the combinations of these modules are correct before applying power. The modules may be damaged if the combination is incorrect. For details, refer to the user's manual for the Motion CPU module.

[Wiring Precautions]

⚠ WARNING

- Shut off the external power supply (all phases) used in the system before wiring. Failure to do so may result in electric shock or damage to the product.
- After installation and wiring, attach the included terminal cover to the module before turning it on for operation. Failure to do so may result in electric shock.

[Wiring Precautions]

⚠ CAUTION

- Individually ground the FG and LG terminals of the programmable controller with a ground resistance of 100 Ω or less. Failure to do so may result in electric shock or malfunction.
- Use applicable solderless terminals and tighten them within the specified torque range. If any spade solderless terminal is used, it may be disconnected when the terminal screw comes loose, resulting in failure.
- Check the rated voltage and terminal layout before wiring to the module, and connect the cables correctly. Connecting a power supply with a different voltage rating or incorrect wiring may cause a fire or failure.
- Connectors for external connection must be crimped or pressed with the tool specified by the manufacturer, or must be correctly soldered. Incomplete connections could result in short circuit, fire, or malfunction.
- Install the connector to the module securely. Poor contact may cause malfunction.
- Do not install the control lines or communication cables together with the main circuit lines or power cables. Keep a distance of 100mm or more between them. Failure to do so may result in malfunction due to noise.
- Place the wires or cables in a duct or clamp them. If not, dangling cable may swing or inadvertently be pulled, resulting in damage to the module or cables or malfunction due to poor connection.
- Connect the cable correctly after confirming the interface type to be connected. Connecting to the wrong interface or incorrect wiring can result in a failure of the module or external devices.
- Tighten the terminal screw within the specified torque range. Undertightening can cause short circuit, fire, or malfunction. Overtightening can damage the screw and/or module, resulting in drop, short circuit, or malfunction.
- Prevent foreign matter such as dust or wire chips from entering the module. Such foreign matter can cause a fire, failure, or malfunction.
- When a protective film is attached to the top of the module, remove it before system operation. If not, inadequate heat dissipation of the module may cause a fire, failure, or malfunction.
- Do not pull the cable section of a cable for disconnection. When disconnecting a cable with a connector, hold the connector and pull it. When disconnecting a cable on a terminal block, loosen the terminal screw before disconnection. Pulling the connected cable can result in malfunction or damage of the module or the cable.
- Mitsubishi Electric programmable controllers must be installed in control panels. Connect the main power supply to the power supply module in the control panel through a relay terminal block. Wiring and replacement of a power supply module must be performed by maintenance personnel who is familiar with protection against electric shock. (For wiring methods, refer to Page 105, Section 4.8.1.)

[Startup and Maintenance Precautions]

⚠ WARNING

- Do not touch any terminal while power is on. Doing so will cause electric shock.
- Correctly connect the battery connector. Do not charge, disassemble, heat, short-circuit, solder, or throw the battery into the fire, or apply liquid or a strong shock to the battery. Doing so will cause the battery to produce heat, explode, ignite, or liquid spill, resulting in injury and fire.
- Shut off the external power supply (all phases) used in the system before cleaning the module or retightening the terminal screws, connector screws, or module fixing screws. Failure to do so may result in electric shock or cause the module to fail or malfunction.

[Startup and Maintenance Precautions]

⚠ CAUTION

- Before performing online operations (especially, program modification, forced output, and operation status change) for the running CPU module from the peripheral connected, read relevant manuals carefully and ensure the safety. Improper operation may damage machines or cause accidents.
- Do not disassemble or modify the modules. Doing so may cause failure, malfunction, injury, or a fire.
- Use any radio communication device such as a cellular phone or PHS (Personal Handy-phone System) 25cm or more away in all directions from the programmable controller. Failure to do so may cause malfunction.
- Shut off the external power supply (all phases) used in the system before mounting or removing the module. Failure to do so may cause the module to fail or malfunction. A module can be replaced online (while power is on) on any MELSECNET/H remote I/O station or in the system where a CPU module supporting the online module change function is used. Note that there are restrictions on the modules that can be replaced online, and each module has its predetermined replacement procedure. For details, refer to this manual and the manual for the corresponding module.
- After the first use of the product, do not perform each of the following operations more than 50 times (IEC 61131-2/JIS B 3502 compliant). Exceeding the limit may cause malfunction.
  - Mounting/removing the module to/from the base unit
  - Inserting/removing the extended SRAM cassette to/from the CPU module
  - Mounting/removing the terminal block to/from the module
- After the first use of the product, do not mount/remove the SD memory card more than 500 times. Exceeding the limit of 500 times may cause malfunction.
- Do not drop or apply shock to the battery to be installed in the module. Doing so may damage the battery, causing the battery fluid to leak inside the battery. If the battery is dropped or any shock is applied to it, dispose of it without using.
- Before handling the module, touch a grounded metal object to discharge the static electricity from the human body. Failure to do so may cause the module to fail or malfunction.

[Computer Connection Precautions]

⚠ CAUTION

- When connecting a personal computer to a CPU module having an RS-232 or a USB interface, observe the following precautions as well as the instructions described in the manual for the personal computer used. Failure to do so may cause the CPU module to fail.
  (1) When the personal computer is AC-powered
  When the personal computer has a 3-pin AC plug or an AC plug with a grounding wire, connect the plug to a grounding receptacle or ground the grounding wire. Ground the personal computer and the CPU module with a ground resistance of 100 ohms or less.
  When the personal computer has a 2-pin AC plug without a ground wire, connect the computer to the CPU module by following the procedure below. For power supplied to the personal computer and the CPU module, using the same power source is recommended.
  1.Unplug the personal computer from the AC receptacle.
  2.Check that the personal computer is unplugged. Then, connect the personal computer to the CPU module with an RS-232 or a USB cable.
  3.Plug the personal computer into the AC receptacle.
  (2) When the personal computer is battery-powered
  The personal computer can be connected to the CPU module without taking specific measures.
  For details, refer to the following.
  Cautions When Using Mitsubishi Programmable Controllers or GOTs Connected to a Personal Computer With the RS-232/USB Interface (FA-A-0298)
  When the USB cable used is the GT09-C30USB-5P manufactured by Mitsubishi Electric, specific measures are not required to connect the AC-powered personal computer to the CPU module. However, note that the signal ground (SG) is common for the CPU module and its RS-232 or USB interface. Therefore, if an SG potential difference occurs between the CPU module and the connected devices, it causes failures of the CPU module and the connected devices.

[Disposal Precautions]

⚠ CAUTION

- When disposing of this product, treat it as industrial waste. When disposing of batteries, separate them from other wastes according to the local regulations. (For details of the Battery Directive in EU countries, refer to Page 701, Appendix 12.)

[Transportation Precautions]

⚠ CAUTION

- When transporting lithium batteries, follow the transportation regulations. (For details of the regulated models, refer to Page 700, Appendix 11.)

●CONDITIONS OF USE FOR THE PRODUCT●

(1) MELSEC programmable controller ("the PRODUCT") shall be used in conditions;
i) where any problem, fault or failure occurring in the PRODUCT, if any, shall not lead to any major or serious accident; and
ii) where the backup and fail-safe function are systematically or automatically provided outside of the PRODUCT for the case of any problem, fault or failure occurring in the PRODUCT.

(2) The PRODUCT has been designed and manufactured for the purpose of being used in general industries.
MITSUBISHI ELECTRIC SHALL HAVE NO RESPONSIBILITY OR LIABILITY (INCLUDING, BUT NOT LIMITED TO ANY AND ALL RESPONSIBILITY OR LIABILITY BASED ON CONTRACT, WARRANTY, TORT, PRODUCT LIABILITY) FOR ANY INJURY OR DEATH TO PERSONS OR LOSS OR DAMAGE TO PROPERTY CAUSED BY the PRODUCT THAT ARE OPERATED OR USED IN APPLICATION NOT INTENDED OR EXCLUDED BY INSTRUCTIONS, PRECAUTIONS, OR WARNING CONTAINED IN MITSUBISHI ELECTRIC USER'S, INSTRUCTION AND/OR SAFETY MANUALS, TECHNICAL BULLETINS AND GUIDELINES FOR the PRODUCT.
("Prohibited Application")
Prohibited Applications include, but not limited to, the use of the PRODUCT in;
- Nuclear Power Plants and any other power plants operated by Power companies, and/or any other cases in which the public could be affected if any problem or fault occurs in the PRODUCT.
- Railway companies or Public service purposes, and/or any other cases in which establishment of a special quality assurance system is required by the Purchaser or End User.
- Aircraft or Aerospace, Medical applications, Train equipment, transport equipment such as Elevator and Escalator, Incineration and Fuel devices, Vehicles, Manned transportation, Equipment for Recreation and Amusement, and Safety devices, handling of Nuclear or Hazardous Materials or Chemicals, Mining and Drilling, and/or other applications where there is a significant risk of injury to the public or property.

Notwithstanding the above restrictions, Mitsubishi Electric may in its sole discretion, authorize use of the PRODUCT in one or more of the Prohibited Applications, provided that the usage of the PRODUCT is limited only for the specific applications agreed to by Mitsubishi Electric and provided further that no special quality assurance or fail-safe, redundant or other safety features which exceed the general specifications of the PRODUCTs are required. For details, please contact the Mitsubishi Electric representative in your region.

(3) Mitsubishi Electric shall have no responsibility or liability for any problems involving programmable controller trouble and system trouble caused by DoS attacks, unauthorized access, computer viruses, and other cyberattacks.

INTRODUCTION

This manual provides hardware specifications, maintenance and inspection of the system, and troubleshooting of the CPU modules, power supply modules, and base units required for operating the Q series programmable controllers.

Before using this product, please read this manual and the relevant manuals carefully and develop familiarity with the functions and performance of the Q series programmable controller to handle the product correctly.
When applying the program examples introduced in this manual to the actual system, ensure the applicability and confirm that it will not cause system control problems.

■ Relevant CPU module

CPU module	Model
Basic model QCPU	Q00JCPU, Q00CPU, Q01CPU
High Performance model QCPU	Q02CPU, Q02HCPU, Q06HCPU, Q12HCPU, Q25HCPU
Process CPU	Q02PHCPU, Q06PHCPU, Q12PHCPU, Q25PHCPU
Redundant CPU	Q12PRHCPU, Q25PRHCPU
Universal model QCPU	Q00UJCPU, Q00UCPU, Q01UCPU, Q02UCPU, Q03UDCPU, Q03UDVCPU, Q03UDECPU, Q04UDHCPU, Q04UDVCPU, Q04UDPVCPU, Q04UDEHCPU, Q06UDHCPU, Q06UDVCPU, Q06UDPVCPU, Q06UDEHCPU, Q10UDHCPU, Q10UDEHCPU, Q13UDHCPU, Q13UDVCPU, Q13UDPVCPU, Q13UDEHCPU, Q20UDHCPU, Q20UDEHCPU, Q26UDHCPU, Q26UDVCPU, Q26UDPVCPU, Q26UDEHCPU, Q50UDEHCPU, Q100UDEHCPU

Precautions when using the Q series CPU module for the first time

Memory must be formatted using a programming tool before first use of the CPU module.
For details of memory formatting, refer to the following.

Operating manual for the programming tool used

Precautions for batteries

(1) When resuming operation with the CPU module which has been stored without battery:

The CPU module memory must be formatted using a programming tool. (Page 280, Section 13.4)

Remark

This manual does not describe the functions of the CPU module.
For the functions, refer to the following.

Manuals for the CPU module used. (Function Explanation, Program Fundamentals)

For multiple CPU systems, refer to the following.

QCPU User's Manual (Multiple CPU System)

For redundant systems, refer to the following.

QnPRHCPU User's Manual (Redundant System)

Memo

CONTENTS

SAFETY PRECAUTIONS 1
CONDITIONS OF USE FOR THE PRODUCT 7
INTRODUCTION 8
MANUALS 15
MANUAL PAGE ORGANIZATION 19
TERMS 21
PACKING LIST 24
DISCONTINUED MODELS 25

CHAPTER 1 OVERVIEW 26

1.1 Features 26

CHAPTER 2 SYSTEM CONFIGURATION 33

2.1 Overall Configuration 34
2.2 Component List. 35
2.3 Precautions for System Configuration 39
2.3.1 Bus connection of GOT 48
2.3.2 Peripheral device configuration 52

CHAPTER 3 CPU MODULE START-UP PROCEDURES 58

CHAPTER 4 INSTALLATION AND WIRING 60

4.1 Installation Environment and Installation Position 60
4.1.1 Installation environment 60
4.1.2 Installation position. 61
4.2 Mounting a Module 64
4.2.1 Mounting precautions. 64
4.2.2 Base unit installation 66
4.2.3 Installation and removal of module 73
4.3 Connecting an Extension Base Unit 80
4.3.1 Setting the extension base number 80
4.3.2 Connection and disconnection of extension cable 87
4.3.3 Extension cable specifications 89
4.3.4 Voltage drop when an extension base unit is used 90
4.4 Mounting and Removing a Terminal Block 96
4.5 Installing and Removing a Memory Card 97
4.6 Installing and Removing an SD Memory Card 101
4.7 Installing and Removing an Extended SRAM Cassette 103
4.8 Wiring 105
4.8.1 Wiring power supplies 105
4.8.2 Wiring of 18-point screw terminal block 111
4.8.3 Wiring to connectors 113
4.8.4 Grounding 118

CHAPTER 5 GENERAL SPECIFICATIONS 119

CHAPTER 6 CPU MODULE 121

6.1 Part Names . . . 121
6.1.1 Basic model QCPU . . . 121
6.1.2 High Performance model QCPU, Process CPU and Redundant CPU . . . 127
6.1.3 Universal model QCPU . . . 132
6.2 Specifications . . . 147
6.2.1 Basic model QCPU . . . 147
6.2.2 High Performance model QCPU . . . 150
6.2.3 Process CPU . . . 154
6.2.4 Redundant CPU . . . 158
6.2.5 Universal model QCPU . . . 162
6.3 Switch Operation at the Time of Writing Program . . . 196
6.3.1 Basic model QCPU and Universal model QCPU . . . 196
6.3.2 High Performance model QCPU, Process CPU and Redundant CPU . . . 197
6.4 Reset Operation . . . 198
6.4.1 Basic model QCPU and Universal model QCPU . . . 198
6.4.2 High Performance model QCPU, Process CPU and Redundant CPU . . . 199
6.5 Latch Clear Operation . . . 200
6.5.1 Basic model QCPU and Universal model QCPU . . . 200
6.5.2 High Performance model QCPU, Process CPU and Redundant CPU . . . 200
6.6 Automatic Write to the Standard ROM . . . 201

CHAPTER 7 POWER SUPPLY MODULE 203

7.1 Part Names and Settings . . . 204
7.1.1 Base unit that can be used in combination with power supply module . . . 210
7.2 Specifications . . . 212
7.2.1 Power supply module specifications . . . 212
7.2.2 Specifications . . . 229
7.2.3 Selecting the power supply module . . . 231
7.2.4 Precautions on power supply capacity . . . 234
7.2.5 Life detection power supply module . . . 235

CHAPTER 8 BASE UNIT 239

8.1 Part Names . . . 239
8.2 Extension Base Units that can be Combined with the Main Base Unit . . . 246
8.3 Specification Table . . . 247

CHAPTER 9 MEMORY CARD 251

9.1 Part Names . . . 251
9.1.1 List of usable memory cards . . . 252
9.2 Specifications . . . 253
9.2.1 Memory card specifications . . . 253

9.2.2 Specifications of the memory card battery 255
9.3 Handling 256
9.3.1 Battery installation into the memory card 257

CHAPTER 10 SD MEMORY CARD 259

10.1 Part Names 259
10.2 Specifications 260
10.3 Handling 260
10.4 Forcibly Disabling the SD Memory Card 261

CHAPTER 11 EXTENDED SRAM CASSETTE 262

11.1 Part Names 262
11.2 Specifications 263
11.3 Handling 263

CHAPTER 12 BATTERY 264

12.1 Specifications 264
12.2 Application 264
12.3 Installation Procedure 265

CHAPTER 13 MAINTENANCE AND INSPECTION 269

13.1 Daily Inspection 269
13.2 Periodic Inspection 270
13.3 Battery Replacement Procedure 271
13.3.1 CPU module battery replacement procedure 271
13.3.2 SRAM card battery replacement procedure 277
13.4 Operating the Programmable Controller that Has been Stored 280

CHAPTER 14 MODULE CHANGE DURING SYSTEM OPERATION 281

14.1 Online Module Change 281
14.2 Change of Redundant Power Supply Module 291

CHAPTER 15 TROUBLESHOOTING 292

15.1 Visual Inspection 293
15.1.1 When the POWER LED does not turn on 294
15.1.2 When the POWER LED does not turn on in green 294
15.1.3 When the LIFE LED does not turn on in green or orange 295
15.1.4 When the MODE LED does not turn on 296
15.1.5 When the RUN LED does not turn on 297
15.1.6 When the BOOT LED flickers 297
15.2 Checking the Error Details 298

15.3 Checking for Functional Errors . . . 301
15.3.1 Write to PLC and Read from PLC . . . 302
15.3.2 Boot operation . . . 303
15.3.3 Errors caused by hardware . . . 304
15.3.4 Ethernet communication . . . 305
15.3.5 Socket communication function . . . 310
15.3.6 Simple PLC communication function . . . 311
15.3.7 MC protocol function . . . 313
15.3.8 Predefined protocol function . . . 314
15.3.9 Transmission from an external device . . . 315
15.3.10 Operating status of the CPU module . . . 315
15.3.11 Errors caused by SFC program instruction . . . 316
15.3.12 I/O module . . . 317
15.3.13 Power supply module . . . 318
15.4 Saving Data . . . 321

APPENDICES 326

Appendix 1 Error Codes . . . 326
Appendix 1.1 Error codes . . . 327
Appendix 1.2 Reading error codes . . . 327
Appendix 1.3 List of error codes (1000 to 1999) . . . 328
Appendix 1.4 List of error codes (2000 to 2999) . . . 348
Appendix 1.5 List of error codes (3000 to 3999) . . . 377
Appendix 1.6 List of error codes (4000 to 4999) . . . 397
Appendix 1.7 List of error codes (5000 to 5999) . . . 413
Appendix 1.8 List of error codes (6000 to 6999) . . . 415
Appendix 1.9 List of error codes (7000 to 10000) . . . 424
Appendix 1.10 Clearing an error . . . 432
Appendix 1.11 Error codes returned to request source during communication with CPU module . . . 433
Appendix 2 List of Special Relay Areas . . . 478
Appendix 3 List of Special Register Areas . . . 527
Appendix 4 Battery Life . . . 620
Appendix 4.1 Display of battery consumption and reduction measures of the consumption . . . 621
Appendix 4.2 Battery lives of CPU modules . . . 623
Appendix 4.3 SRAM card battery life . . . 651
Appendix 5 Checking Serial Number and Function Version . . . 653
Appendix 5.1 Applicable software versions . . . 655
Appendix 5.2 GX Configurator versions applicable to a single CPU system . . . 656
Appendix 6 Added or Changed Functions . . . 658
Appendix 6.1 Basic model QCPU upgrade . . . 658
Appendix 6.2 High Performance model QCPU upgrade . . . 660
Appendix 6.3 Precautions for using older versions of the High Performance model QCPU . . . 662
Appendix 6.4 Process CPU upgrade . . . 666
Appendix 6.5 Redundant CPU upgrade . . . 667
Appendix 6.6 Universal model QCPU upgrade . . . 668

Appendix 7 Specifications of L1MEM-2GBSD and L1MEM-4GBSD 672
Appendix 8 EMC and Low Voltage Directives 673
Appendix 8.1 Requirements for compliance with the EMC Directive 673
Appendix 8.1.1 Standards relevant to the EMC Directive 674
Appendix 8.1.2 Installation instructions for EMC Directive 676
Appendix 8.1.3 Cables 677
Appendix 8.1.4 Installation environment of the CC-Link/LT module and the AS-i module . . . 685
Appendix 8.1.5 Power supply part of the power supply module, Q00JCPU, and Q00UJCPU 685
Appendix 8.1.6 Precautions when using a MELSEC-A series module 686
Appendix 8.1.7 Others 688
Appendix 8.2 Requirements to compliance with the Low Voltage Directive 690
Appendix 8.2.1 Standard applied for MELSEC-Q series programmable controller 690
Appendix 8.2.2 MELSEC-Q series programmable controller selection 690
Appendix 8.2.3 Power supply 691
Appendix 8.2.4 Control panel 691
Appendix 8.2.5 External wiring 692
Appendix 9 General Safety Requirements 693
Appendix 10 Calculating Heat Generation of Programmable Controller 697
Appendix 11 Precautions for Battery Transportation 700
Appendix 12 Handling of Batteries and Devices with Built-in Batteries in EU Member States 701
Appendix 12.1 Disposal precautions 701
Appendix 12.2 Exportation precautions 702
Appendix 13 Type Approval Certificates for Ship Classifications 703
Appendix 14 External Dimensions 704
Appendix 14.1 CPU modules 704
Appendix 14.2 Power supply modules 711
Appendix 14.3 Main base units 715
Appendix 14.4 Extension base units 721
Appendix 14.5 Other optional items 728

INDEX 731

REVISIONS 734
WARRANTY 741
INFORMATION AND SERVICES 742
TRADEMARKS 742

MANUALS

To understand the main specifications, functions, and usage of the CPU module, refer to the basic manuals.
Read other manuals as well when using a different type of CPU module and its functions.

The numbers in the "CPU module" and the respective modules are as follows.

Number	CPU module
1)	Basic model QCPU
2)	High Performance model QCPU
3)	Process CPU
4)	Redundant CPU
5)	Universal model QCPU

● **:** Basic manual, ○ : Other CPU module manuals/Use them to utilize functions.

(1) CPU module user's manual

Manual name <Manual number>	Description	CPU module				
		1)	2)	3)	4)	5)
QnUCPU User's Manual (Function Explanation, Program Fundamentals) <SH-080807ENG>	Functions, methods, and devices for programming					●
Qn(H)/QnPH/QnPRHCPU User's Manual (Function Explanation, Program Fundamentals) <SH-080808ENG>	Functions, methods, and devices for programming	●	●	●	●	
QCPU User's Manual (Multiple CPU System) <SH-080485ENG>	Multiple CPU system configuration (system configurations, I/O numbers, communications between CPU modules, and communications with I/O modules and intelligent function modules)	○	○	○		○
QnPRHCPU User's Manual (Redundant System) <SH-080486ENG>	Redundant system configuration (system configuration, functions, communication with external devices, and troubleshooting)				●	
QnUCPU User's Manual (Communication via Built-in Ethernet Port) <SH-080811ENG>	Communication via the built-in Ethernet ports of the CPU module					○
QnUDVCPU/LCPU User's Manual (Data Logging Function) <SH-080893ENG>	Data logging function of the CPU module					○

(2) Programming manual

Manual name <Manual number>	Description	CPU module				
		1)	2)	3)	4)	5)
MELSEC-Q/L Programming Manual (Common Instruction) <SH-080809ENG>	Detailed description and usage of instructions used in programs	●	●	●	●	●
MELSEC-Q/L/QnA Programming Manual (SFC) <SH-080041>	System configuration, specifications, functions, programming, and error codes for SFC (MELSAP3) programs	○	○	○	○	○
MELSEC-Q/L Programming Manual (MELSAP-L) <SH-080076>	System configuration, specifications, and programming for SFC (MELSAP-L) programs	○	○	○	○	○
MELSEC-Q/L Programming Manual (Structured Text) <SH-080366E>	System configuration and programming using structured text language	○	○	○	○	○
MELSEC-Q/L/QnA Programming Manual (PID Control Instructions) <SH-080040>	Dedicated instructions for PID control	○	○			○
MELSEC-Q Programming/Structured Programming Manual (Process Control Instructions) <SH-080316E>	Dedicated instructions for process control			○	○	○

(3) Operating manual

Manual name <Manual number>	Description	CPU module				
		1)	2)	3)	4)	5)
GX Works2 Version 1 Operating Manual (Common) <SH-080779ENG>	System configuration, parameter settings, and online operations of GX Works2, which are common to Simple projects and Structured projects	●	●	●	●	●
GX Developer Version 8 Operating Manual <SH-080373E>	Operating methods of GX Developer, such as programming, printing, monitoring, and debugging	○	○	○	○	○

(4) Intelligent function module manual

Manual name <Manual number>	Description	CPU module				
		1)	2)	3)	4)	5)
MELSEC-Q CC-Link IE Controller Network Reference Manual <SH-080668ENG>	Specifications, procedures and settings before system operation, parameter setting, programming, and troubleshooting of the CC-Link IE Controller Network module	○	○	○	○	○
MELSEC-Q CC-Link IE Field Network Master/Local Module User's Manual <SH-080917ENG>	Specifications, procedures and settings before system operation, parameter setting, programming, and troubleshooting of the CC-Link IE Field Network module	○	○	○	○	○
Q Corresponding MELSECNET/H Network System Reference Manual (PLC to PLC network) <SH-080049>	Specifications, procedures and settings before system operation, parameter setting, programming, and troubleshooting of a MELSECNET/H network system (PLC to PLC network)	○	○	○	○	○
Q Corresponding MELSECNET/H Network System Reference Manual (Remote I/O network) <SH-080124>	Specifications, procedures and settings before system operation, parameter setting, programming, and troubleshooting of a MELSECNET/H network system (remote I/O network)	○	○	○	○	○
Q Corresponding Ethernet Interface Module User's Manual (Basic) <SH-080009>	Specifications, procedures for data communication with external devices, line connection (open/close), fixed buffer communication, random access buffer communication, and troubleshooting of the Ethernet module	○	○	○	○	○
MELSEC-Q/L Ethernet Interface Module User's Manual (Application) <SH-080010>	E-mail function, programmable controller CPU status monitoring function, communication via CC-Link IE Controller Network, CC-Link IE Field Network, MELSECNET/H, or MELSECNET/10, communication using the data link instructions, and file transfer function (FTP server) of the Ethernet module	○	○	○	○	○
MELSEC-Q CC-Link System Master/Local Module User's Manual <SH-080394E>	System configuration, performance specifications, functions, handling, wiring, and troubleshooting of the QJ61BT11N	○	○	○	○	○
Q Corresponding Serial Communication Module User's Manual (Basic) <SH-080006>	Overview, system configuration, specifications, procedures before operation, basic data communication method with external devices, maintenance and inspection, and troubleshooting for using the serial communication module	○	○	○	○	○
MELSEC-Q/L Serial Communication Module User's Manual (Application) <SH-080007>	Special functions (specifications, usage, and settings) and data communication method with external devices of the serial communication module	○	○	○	○	○

(5) Others

Manual name <Manual number>	Description	CPU module				
		1)	2)	3)	4)	5)
iQ Sensor Solution Reference Manual <SH-081133ENG>	Operating methods of iQ Sensor Solution, such as programming and monitoring					○
CC-Link IE Field Network Basic Reference Manual <SH-081684ENG>	Specifications, procedures before operation, system configuration, programming, functions, parameter settings, and troubleshooting of CC-Link IE Field Network Basic					○

MANUAL PAGE ORGANIZATION

In this manual, pages are organized and the symbols are used as shown below.

The following page illustration is for explanation purpose only, and is different from the actual pages.

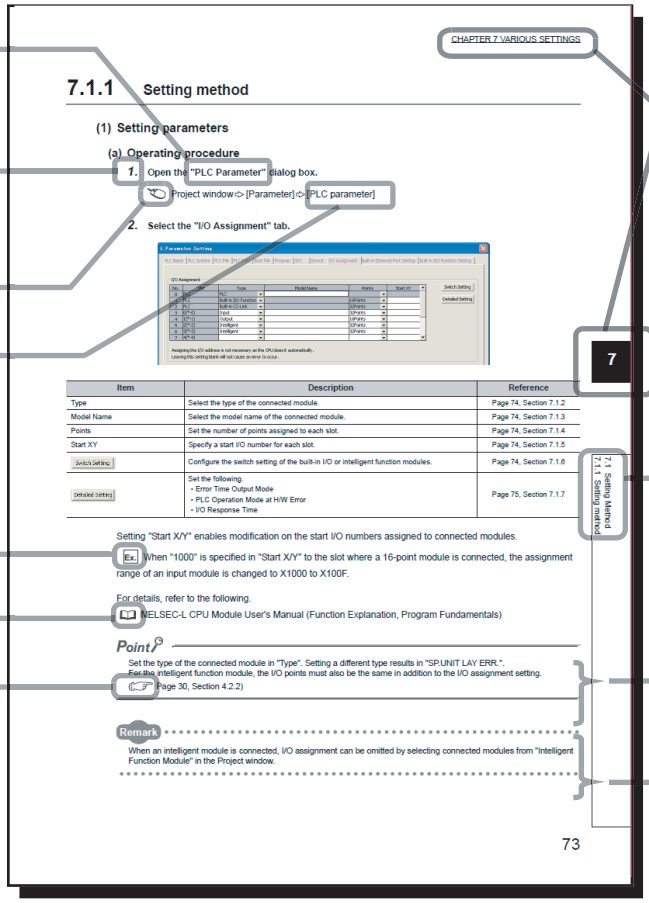

"" is used for screen names and items.

1. shows operating procedures.

shows mouse operations.*1

[ ] is used for items in the menu bar and the project window.

Ex. shows setting or operating examples.

shows reference manuals.

shows reference pages.

The chapter of the current page is shown.

The section of the current page is shown.

Point shows notes that requires attention.

Remark shows useful information.

*1 The mouse operation example is provided below. (For GX Works2)

Menu bar

Ex. [Online] ⇨ [Write to PLC...]

Select [Online] on the menu bar, and then select [Write to PLC...].

A window selected in the view selection area is displayed.

Ex. Project window ⇨ [Parameter] ⇨ [PLC Parameter]

Select [Project] from the view selection area to open the Project window.
In the Project window, expand [Parameter] and select [PLC Parameter].

View selection area

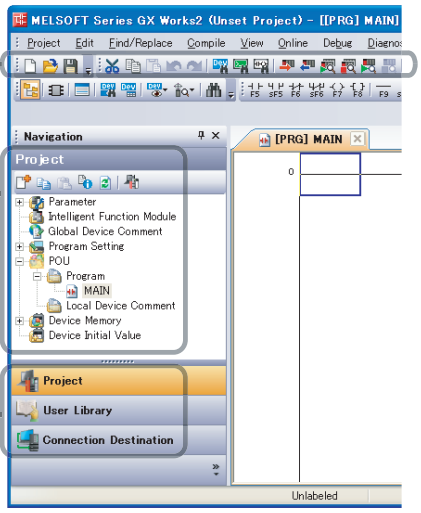

Icon					Description
Basic model QCPU	High Performance model QCPU	Process CPU	Redundant CPU	Universal model QCPU	
Basic	High performance	Process	Redundant	Universal	Icons indicate that specifications described on the page contain some precautions.

TERMS

Unless otherwise specified, this manual uses the following generic terms and abbreviations.
*☐ indicates a part of the model or version.
(Example): Q33B, Q35B, Q38B, Q312B → Q3☐B

Term	Description
■ CPU module type	
CPU module	Generic term for the Basic model QCPU, High Performance model QCPU, Process CPU, Redundant CPU, and Universal model QCPU
Basic model QCPU	Generic term for the Q00JCPU, Q00CPU, and Q01CPU
High Performance model QCPU	Generic term for the Q02CPU, Q02HCPU, Q06HCPU, Q12HCPU, and Q25HCPU
Process CPU	Generic term for the Q02PHCPU, Q06PHCPU, Q12PHCPU, and Q25PHCPU
Redundant CPU	Generic term for the Q12PRHCPU and Q25PRHCPU
Universal model QCPU	Generic term for the Q00UJCPU, Q00UCPU, Q01UCPU, Q02UCPU, Q03UDCPU, Q03UDVCPU, Q03UDECPU, Q04UDHCPU, Q04UDVCPU, Q04UDPVCPU, Q04UDEHCPU, Q06UDHCPU, Q06UDVCPU, Q06UDPVCPU, Q06UDEHCPU, Q10UDHCPU, Q10UDEHCPU, Q13UDHCPU, Q13UDVCPU, Q13UDPVCPU, Q13UDEHCPU, Q20UDHCPU, Q20UDEHCPU, Q26UDHCPU, Q26UDVCPU, Q26UDPVCPU, Q26UDEHCPU, Q50UDEHCPU, and Q100UDEHCPU
Built-in Ethernet port QCPU	Generic term for the Q03UDVCPU, Q03UDECPU, Q04UDVCPU, Q04UDPVCPU, Q04UDEHCPU, Q06UDVCPU, Q06UDPVCPU, Q06UDEHCPU, Q10UDEHCPU, Q13UDVCPU, Q13UDPVCPU, Q13UDEHCPU, Q20UDEHCPU, Q26UDVCPU, Q26UDPVCPU, Q26UDEHCPU, Q50UDEHCPU, and Q100UDEHCPU
High-speed Universal model QCPU	Generic term for the Q03UDVCPU, Q04UDVCPU, Q06UDVCPU, Q13UDVCPU, and Q26UDVCPU
Universal model Process CPU	Generic term for the Q04UDPVCPU, Q06UDPVCPU, Q13UDPVCPU, and Q26UDPVCPU
Motion CPU	Generic term for the Mitsubishi Electric motion controllers: Q172CPUN, Q173CPUN, Q172HCPU, Q173HCPU, Q172CPUN-T, Q173CPUN-T, Q172HCPU-T, Q173HCPU-T, Q172DCPU, Q173DCPU, Q172DCPU-S1, Q173DCPU-S1, Q172DSCPU, and Q173DSCPU
PC CPU module	Generic term for the MELSEC-Q series-compatible PC CPU modules manufactured by CONTEC Co., Ltd.: PPC-CPU686(MS)-64, PPC-CPU686(MS)-128, and PPC-CPU852(MS)-512
C Controller module	Generic term for the C Controller modules: Q06CCPU-V, Q06CCPU-V-B, Q12DCCPU-V, Q24DHCCPU-V, and Q24DHCCPU-LS
High-speed Universal model QCPU	Generic term for the Q03UDVCPU, Q04UDVCPU, Q06UDVCPU, Q13UDVCPU, and Q26UDVCPU
Built-in Ethernet port QCPU	Generic term for the Q03UDVCPU, Q03UDECPU, Q04UDVCPU, Q04UDEHCPU, Q06UDVCPU, Q06UDEHCPU, Q10UDEHCPU, Q13UDVCPU, Q13UDEHCPU, Q20UDEHCPU, Q26UDVCPU, Q26UDEHCPU, Q50UDEHCPU, and Q100UDEHCPU
■ CPU module model	
QnU(D)(H)CPU	Generic term for the Q00UJCPU, Q00UCPU, Q01UCPU, Q02UCPU, Q03UDCPU, Q04UDHCPU, Q06UDHCPU, Q10UDHCPU, Q13UDHCPU, Q20UDHCPU, and Q26UDHCPU
QnUDVCPU	Generic term for the Q03UDVCPU, Q04UDVCPU, Q06UDVCPU, Q13UDVCPU, and Q26UDVCPU
QnUDPVCPU	Generic term for the Q04UDPVCPU, Q06UDPVCPU, Q13UDPVCPU, and Q26UDPVCPU
QnUDE(H)CPU	Generic term for the Q03UDECPU, Q04UDEHCPU, Q06UDEHCPU, Q10UDEHCPU, Q13UDEHCPU, Q20UDEHCPU, Q26UDEHCPU, Q50UDEHCPU, and Q100UDEHCPU

Term	Description
■ Base unit type	
Base unit	Generic term for the main base unit, extension base unit, slim type main base unit, redundant power main base unit, redundant power extension base unit, redundant type extension base unit base unit, and multiple CPU high speed main base unit
Main base unit	Generic term for the Q3☐B, Q3☐SB, Q3☐RB, and Q3☐DB
Extension base unit	Generic term for the Q5☐B, Q6☐B, Q6☐RB, Q6☐WRB, QA1S5☐B, QA1S6☐B, QA1S6ADP+A1S5☐B/A1S6☐B, QA6☐B, and QA6ADP+A5☐B/A6☐B
Slim type main base unit	Another term for the Q3☐SB
Redundant power main base unit	Another term for the Q3☐RB
Redundant power extension base unit	Another term for the Q6☐RB
Redundant type extension base unit	Another term for the Q6☐WRB
Multiple CPU high speed main base unit	Another term for the Q3☐DB
Redundant base unit	Generic term for the redundant power main base unit, redundant power extension base unit, and redundant type extension base unit
Redundant power supply base unit	Generic term for the redundant power main base unit and redundant power extension base unit
■ Base unit model	
Q3☐B	Generic term for the Q33B, Q35B, Q38B, and Q312B main base units
Q3☐SB	Generic term for the Q32SB, Q33SB, and Q35SB slim type main base units
Q3☐RB	Another term for the Q38RB main base unit for redundant power supply system
Q3☐DB	Generic term for the Q35DB, Q38DB and Q312DB multiple CPU high speed main base units
Q5☐B	Generic term for the Q52B and Q55B extension base units
Q6☐B	Generic term for the Q63B, Q65B, Q68B, and Q612B extension base units
Q6☐RB	Another term for the Q68RB extension base unit for redundant power supply system
Q6☐WRB	Another term for Q65WRB extension base unit for redundant system
QA1S5☐B	Another term for the QA1S51B extension base unit
QA1S6☐B	Generic term for the QA1S65B and QA1S68B extension base units
QA6☐B	Generic term for the QA65B and QA68B extension base units
A5☐B	Generic term for the A52B, A55B, and A58B extension base units
A6☐B	Generic term for the A62B, A65B, and A68B extension base units
QA6ADP+A5☐B/A6☐B	Abbreviation for A large type extension base unit where the QA6ADP is mounted
QA1S6ADP+A1S5☐B/A1S6☐B	Abbreviation for A small type extension base unit where the QA1S6ADP is mounted
■ Power supply module	
Power supply module	Generic term for the Q series power supply module, AnS series power supply module, A series power supply module, slim type power supply module, redundant power supply module, and life detection power supply module
Q series power supply module	Generic term for the Q61P-A1, Q61P-A2, Q61P, Q61P-D, Q62P, Q63P, Q64P, and Q64PN power supply modules
AnS series power supply module	Generic term for the A1S61PN, A1S62PN, and A1S63P power supply modules
A series power supply module	Generic term for the A61P, A61PN, A62P, A63P, A68P, A61PEU, and A62PEU power supply modules
Slim type power supply module	Abbreviation for the Q61SP slim type power supply module
Redundant power supply module	Generic term for the Q63RP, Q64RPN and Q64RP redundant power supply modules
Life detection power supply module	Abbreviation for the Q61P-D life detection power supply module

Term	Description
■ Network module	
CC-Link IE module	Generic term for the CC-Link IE Controller Network module and the CC-Link IE Field Network module
MELSECNET/H module	Abbreviation for the MELSECNET/H network module
Ethernet module	Abbreviation for the Ethernet interface module
CC-Link module	Abbreviation for the CC-Link system master/local module
■ Network	
CC-Link IE	Generic term for the CC-Link IE Controller Network and the CC-Link IE Field Network
MELSECNET/H	Abbreviation for the MELSECNET/H network system
■ Memory extension	
Memory card	Generic term for the SRAM card, Flash card, and ATA cards
SRAM card	Generic term for the Q2MEM-1MBSN, Q2MEM-1MBS, Q2MEM-2MBSN, Q2MEM-2MBS, Q3MEM-4MBS, and Q3MEM-8MBS SRAM cards
Flash card	Generic term for the Q2MEM-2MBF and Q2MEM-4MBF Flash cards
ATA card	Generic term for the Q2MEM-8MBA, Q2MEM-16MBA, and Q2MEM-32MBA ATA cards
SD memory card	Generic term for the NZ1MEM-2GBSD, NZ1MEM-4GBSD, NZ1MEM-8GBSD, NZ1MEM-16GBSD, L1MEM-2GBSD, and L1MEM-4GBSD SD memory cards. A memory device which consists of flash memory (abbreviation for Secure Digital Memory Card)
Extended SRAM cassette	Generic term for the Q4MCA-1MBS, Q4MCA-2MBS, Q4MCA-4MBS, and Q4MCA-8MBS extended SRAM cassette
■ Software package	
Programming tool	Generic term for GX Works2 and GX Developer
GX Works2	Product name for the MELSEC programmable controller software package
GX Developer	
PX Developer	Product name for SW□D5C-FBDQ process control FBD software package
■ Others	
Control CPU	A CPU module which controls each I/O module and intelligent function module In a multiple CPU system, the CPU module which executes the control can be set for each module.
Controlled module	I/O modules and intelligent function modules which are controlled by a control CPU
MC protocol	Abbreviation for the MELSEC communication protocol. The MELSEC communication protocol is a communication method to access from an external device to the CPU module according to the communication procedure for the Q series programmable controller (such as a serial communication module, Ethernet module).
QA6ADP	Abbreviation for the QA6ADP QA conversion adapter module
QA1S6ADP	Generic term for the QA1S6ADP and QA1S6ADP-S1 Q-AnS base unit conversion adapters
Extension cable	Generic term for the QC05B, QC06B, QC12B, QC30B, QC50B, and QC100B extension cables
Tracking cable	Generic term for the QC10TR and QC30TR tracking cables for the Redundant CPU
Battery	Generic term for the Q6BAT, Q7BATN, Q7BAT, and Q8BAT CPU module batteries, Q2MEM-BAT SRAM card battery, and Q3MEM-BAT SRAM card battery
GOT	Generic term for Mitsubishi Electric Graphic Operation Terminal, GOT-A*** series, GOT-F*** series, GOT1000 series, and GOT2000 series

PACKING LIST

The following items are included in the package of this product. Before use, check that all the items are included.

(1) CPU module

(a) Q00JCPU or Q00UJCPU

Item	Quantity
Module	1
Battery (Q6BAT)	1
Base unit installation screw (M4 × 14 screw)	4
Safety Guidelines (IB-0800423)	1

(b) Other than Q00JCPU and Q00UJCPU

Item	Quantity
Module	1
Battery (Q6BAT)	1

(2) Main base unit

Item	Quantity
Unit	1
Base unit installation screw (M4 × 14 screw[*1])	4/5[*2]
Safety Guidelines (IB-0800423)	1

*1 For the slim type main base unit, M4 × 12 screws are supplied.
*2 Screws as many as the number of installation holes are supplied.

(3) Extension base unit

Item	Quantity
Unit	1
Base unit installation screw (M4 × 14 screw)	4/5[*3]

*3 Screws as many as the number of installation holes are supplied.

(4) Power supply module or I/O module

Item	Quantity
Module	1

DISCONTINUED MODELS

The following models are described in this manual, but have no longer been produced.
For the onerous repair term after discontinuation of production, refer to "WARRANTY".

Model	Production discontinuation
Q61P-A1	March 2009
Q61P-A2	March 2009
Q64P	February 2010
L1MEM-2GBSD	July 2015
L1MEM-4GBSD	July 2015
Q64RP	September 2015
Q00JCPU	September 2018
Q00CPU	September 2018
Q01CPU	September 2018
Q02CPU	September 2018
Q02HCPU	September 2018
Q06HCPU	September 2018
Q12HCPU	September 2018
Q25HCPU	September 2018

CHAPTER 1 OVERVIEW

1.1 Features

This section describes the features of Q series CPU modules.

(1) Large number of I/O points

The Q Series CPU module supports the following number of actual I/O points accessible to the I/O modules mounted on the base unit.

(a) Basic model QCPU

- Q00JCPU: 256 points (X/Y0 to FF)
- Q00CPU, Q01CPU: 1024 points (X/Y0 to 3FF)

Up to 2048 points (X/Y0 to 7FF) are supported as the number of I/O device points usable for refreshing the remote I/O of the CC-Link and link I/O (LX, LY) of the MELSECNET/H.

(b) High Performance model QCPU

One module can support 4096 points (X/Y0 to FFF).
Up to 8192 points (X/Y0 to 1FFF) are supported as the number of I/O device points usable for the remote I/O stations in the MELSECNET/H remote I/O network, the CC-Link data link, and the MELSECNET/MINI-S3 data link.

(c) Process CPU and Redundant CPU

One module can support 4096 points (X/Y0 to FFF).
Up to 8192 points (X/Y0 to 1FFF) are supported as the number of I/O device points usable for the remote I/O stations in the MELSECNET/H remote I/O network and CC-Link data link.

(d) Universal model QCPU

- Q00UJCPU: 256 points (X/Y0 to FF)
- Q00UCPU, Q01UCPU: 1024 points (X/Y0 to 3FF)
- Q02UCPU: 2048 points (X/Y0 to 7FF)
- Q03UDCPU, Q03UDVCPU, Q03UDHCPU, Q04UDHCPU, Q04UDVCPU, Q04UDPVCPU, Q04UDEHCPU, Q06UDHCPU, Q06UDVCPU, Q06UDPVCPU, Q06UDEHCPU, Q10UDHCPU, Q10UDEHCPU, Q13UDHCPU, Q13UDVCPU, Q13UDPVCPU, Q13UDEHCPU, Q20UDHCPU, Q20UDEHCPU, Q26UDHCPU, Q26UDVCPU, Q26UDPVCPU, Q26UDEHCPU, Q50UDEHCPU, Q100UDEHCPU: 4096 points (X/Y0 to FFF)

Up to 8192 points (X/Y0 to 1FFF) are supported as the number of I/O device points usable for the remote I/O stations in the MELSECNET/H remote I/O network and CC-Link data link.

(2) Large selection of CPU modules

The following lists the lineup of CPU available for various program size.

CPU module type		Program size
Basic model QCPU	Q00JCPU, Q00CPU	8K steps
	Q01CPU	14K steps
High Performance model QCPU	Q02CPU, Q02HCPU	28K steps
	Q06HCPU	60K steps
	Q12HCPU	124K steps
	Q25HCPU	252K steps
Process CPU	Q02PHCPU	28K steps
	Q06PHCPU	60K steps
	Q12PHCPU	124K steps
	Q25PHCPU	252K steps
Redundant CPU	Q12PRHCPU	124K steps
	Q25PRHCPU	252K steps
Universal model QCPU	Q00UJCPU, Q00UCPU	10K steps
	Q01UCPU	15K steps
	Q02UCPU	20K steps
	Q03UDCPU, Q03UDVCPU, Q03UDHCPU	30K steps
	Q04UDHCPU, Q04UDVCPU, Q04UDPVCPU, Q04UDEHCPU	40K steps
	Q06UDHCPU, Q06UDVCPU, Q06UDPVCPU, Q06UDEHCPU	60K steps
	Q10UDHCPU, Q10UDEHCPU	100K steps
	Q13UDHCPU, Q13UDVCPU, Q13UDPVCPU, Q13UDEHCPU	130K steps
	Q20UDHCPU, Q20UDEHCPU	200K steps
	Q26UDHCPU, Q26UDVCPU, Q26UDPVCPU, Q26UDEHCPU	260K steps
	Q50UDEHCPU	500K steps
	Q100UDEHCPU	1000K steps

(3) High-speed processing

High speed processing has been achieved.

CPU module type		LD instruction processing speed
Basic model QCPU	Q00JCPU	200ns
	Q00CPU	160ns
	Q01CPU	100ns
High Performance model QCPU	Q02CPU	79ns
	Q02HCPU, Q06HCPU, Q12HCPU, Q25HCPU	34ns
Process CPU	Q02PHCPU, Q06PHCPU, Q12PHCPU, Q25PHCPU	
Redundant CPU	Q12PRHCPU, Q25PRHCPU	
Universal model QCPU	Q00UJCPU	120ns
	Q00UCPU	80ns
	Q01UCPU	60ns
	Q02UCPU	40ns
	Q03UDCPU, Q03UDECPU	20ns
	Q04UDHCPU, Q04UDEHCPU, Q06UDHCPU, Q06UDEHCPU, Q10UDHCPU, Q10UDEHCPU, Q13UDHCPU, Q13UDEHCPU, Q20UDHCPU, Q20UDEHCPU, Q26UDHCPU, Q26UDEHCPU, Q50UDEHCPU, Q100UDEHCPU	9.5ns
	Q03UDVCPU, Q04UDVCPU, Q04UDPVCPU, Q06UDVCPU, Q06UDPVCPU, Q13UDVCPU, Q13UDPVCPU, Q26UDVCPU, Q26UDPVCPU	1.9ns

The MELSEC Q series base unit high-speed system bus has achieved faster access to an intelligent function module and link refresh with a network module.

(a) Basic model QCPU

MELSECNET/H link refreshing: 2.2ms/2K words*1

*1 The Q01CPU is used without using SB and SW, and the MELSECNET/H network module is mounted on the main base unit.

(b) High Performance model QCPU, Process CPU, Redundant CPU or Universal model QCPU

Access to the intelligent function module: 20μs/word (approximately 7 times*2)

MELSECNET/H link refreshing: 4.6ms/8K words (approximately 4.3 times*2)

*2 These are the values resulted from the following comparison:
- Comparing Q02HCPU with Q2ASHCPU-S1
- Comparing Q25PHCPU with Q4ARCPU
- Comparing Q25PRHCPU with Q4ARCPU

(4) Increase in debugging efficiency through high-speed communication with a programming tool

High-speed communications at 115.2Kbps maximum are available by using RS-232 which reducing the time required for writing and reading of programs and monitoring. Also, the communication time efficiency of debugging has been increased.

In addition, High Performance model QCPUs (except for the Q02CPU), Process CPUs, Redundant CPUs and Universal model QCPUs support USB, so that high-speed communications of 12Mbps are available.

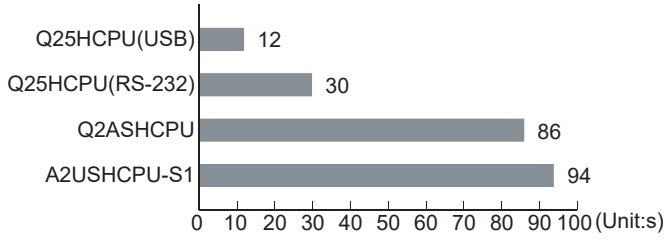

(5) Use of AnS/A series I/O modules and special function modules

The AnS/A series compatible extension base units (QA1S5□B, QA1S6□B, QA1S6ADP+A1S5□B/A1S6□B, QA6□B, and QA6ADP+A5□B/A6□B) can be connected to the main base unit where the High Performance model QCPU or Universal model QCPU[*1] is mounted. This enables the use of AnS/A series I/O modules and special function modules.

*1 The Universal model QCPU whose serial number (first five digits) is "13102" or later is applicable. (Except for the QnUDPVCPU)

(6) Miniaturized modules (space-saving size)

The installation space for the Q series has been reduced by approx. 60% compared with the AnS series.

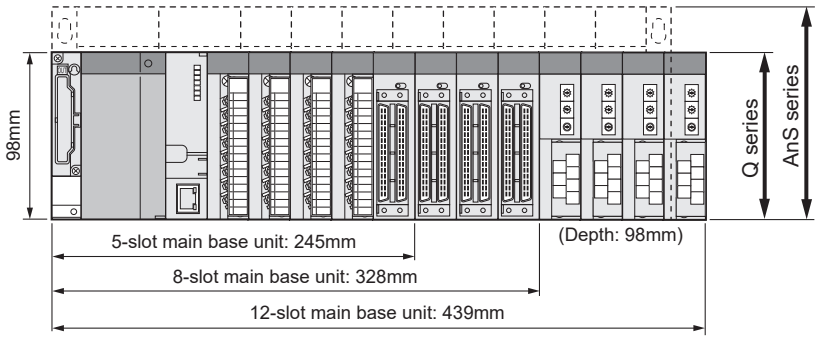

(7) Connection of up to 7 extension base units

Up to seven extension base units can be connected to the Q series CPU module.
The overall extension cable length is 13.2m, which allows flexible layout of base units.

(8) Memory extension

By extending the memory capacity of a CPU module, large size files can be managed. Comments can be set to all data devices and old programs can be saved as correction history.

(a) Memory card

A memory card (maximum 32M bytes) can be installed. (The maximum size is available only for ATA cards.)
Memory cards are used for the following operations.

- Boot operation
- Restoring backup data
- Writing programs to the ROM

Data that cannot be stored in the built-in memory of the CPU module, such as sampling trace data and file register data, can be stored as well.

(b) SD memory card

SD memory cards are used for the following operations.

- Boot operation
- Restoring backup data
- Data backup
- Data logging

(c) Extended SRAM cassette

An extended SRAM cassette extends the capacity of the standard RAM in a CPU module.

- An extended SRAM cassette can be used together with an SD memory card, allowing users to store data separately (for example, boot data in an SD memory card and device data in an extended SRAM cassette). This improves maintainability.
- With existing CPU modules, file register areas in the standard RAM and an SRAM card cannot be accessed sequentially, and the boundary needs to be considered at programming. If the standard RAM capacity is extended using an extended SRAM cassette, the device area can be extended without considering the boundary.

Remark

Memory extension methods differ depending on the CPU module. (☞ Page 35, Section 2.2)

(9) Automatic write to the standard ROM Note 1.1, Note 1.2

Parameters and programs in a memory card or SD memory card can be written to the standard ROM of the CPU module without using a programming tool.
If the boot operation is being performed from the standard ROM, parameters and programs in a memory card or SD memory card can be written to the standard ROM by inserting it to the CPU module. Users do not need a programming tool (personal computer) on hand to modify parameters and programs.

(10)External input/output forced on/off Note 1.1

Forced on and off of external input and output is available using a programming tool even when the CPU module is running or program is being processed.
Also, wiring test and operation test can be conducted without halting the CPU module by forcibly turning on or off the I/O.

(11)Remote password function

When the built-in Ethernet port QCPU, Ethernet module, or serial communication module is externally accessed, an access to the CPU module can be controlled by setting a remote password.

(12)Remote I/O network of MELSECNET/H Note 1.1

A MELSECNET/H remote I/O system can be configured by installing a MELSECNET/H remote master station.

Point

- The remote password can be set up when the Ethernet module, or serial communication module of function version B or later is used.
- The MELSECNET/H remote I/O network can be implemented when the MELSECNET/H network module of function version B or later is used.

(13)Support of multiple CPU systems

CPU module supports the multiple CPU system.
Multiple CPU systems can be constructed in combination with CPU modules, motion CPU(s), PC CPU module(s), and C Controller module.
For details of the multiple CPU system, refer to the following.

QCPU User's Manual (Multiple CPU System)

Note 1.1 **Basic**

The Basic model QCPU does not support the following functions.
• Automatic write to the standard ROM
• External input/output forced on/off
• MELSECNET/H remote I/O network

Note 1.2 **Universal**

The Universal model QCPU does not support the following function.
• Parameter setting of automatic write to the standard ROM

(14)Support of redundant power supply systems

The redundant power supply system can be configured using a redundant base unit and redundant power supply modules.

The system can continue operation even if one of the power supply modules fails, since the other will supply the power.

(15)Direct connection to Ethernet Note 1.3

The Built-in Ethernet port QCPU module allows direct connections to Ethernet.

For details of the functions, refer to the following.

QnUCPU User's Manual (Communication via Built-in Ethernet Port)

Note 1.3 Universal

Only the Built-in Ethernet port QCPU supports this function.

CHAPTER 2 SYSTEM CONFIGURATION

This chapter describes system configurations, precautions, and components of the Q Series CPU module.

This section describes system configurations for a single CPU system with the Basic model QCPU, High Performance model QCPU, Process CPU, or Universal model QCPU, and a system configuration when using GOT by bus connection.
For a multiple CPU system and redundant system (when using the Redundant CPU), refer to the following.

QCPU User's Manual (Multiple CPU System)
QnPRHCPU User's Manual (Redundant System)

2.1 Overall Configuration

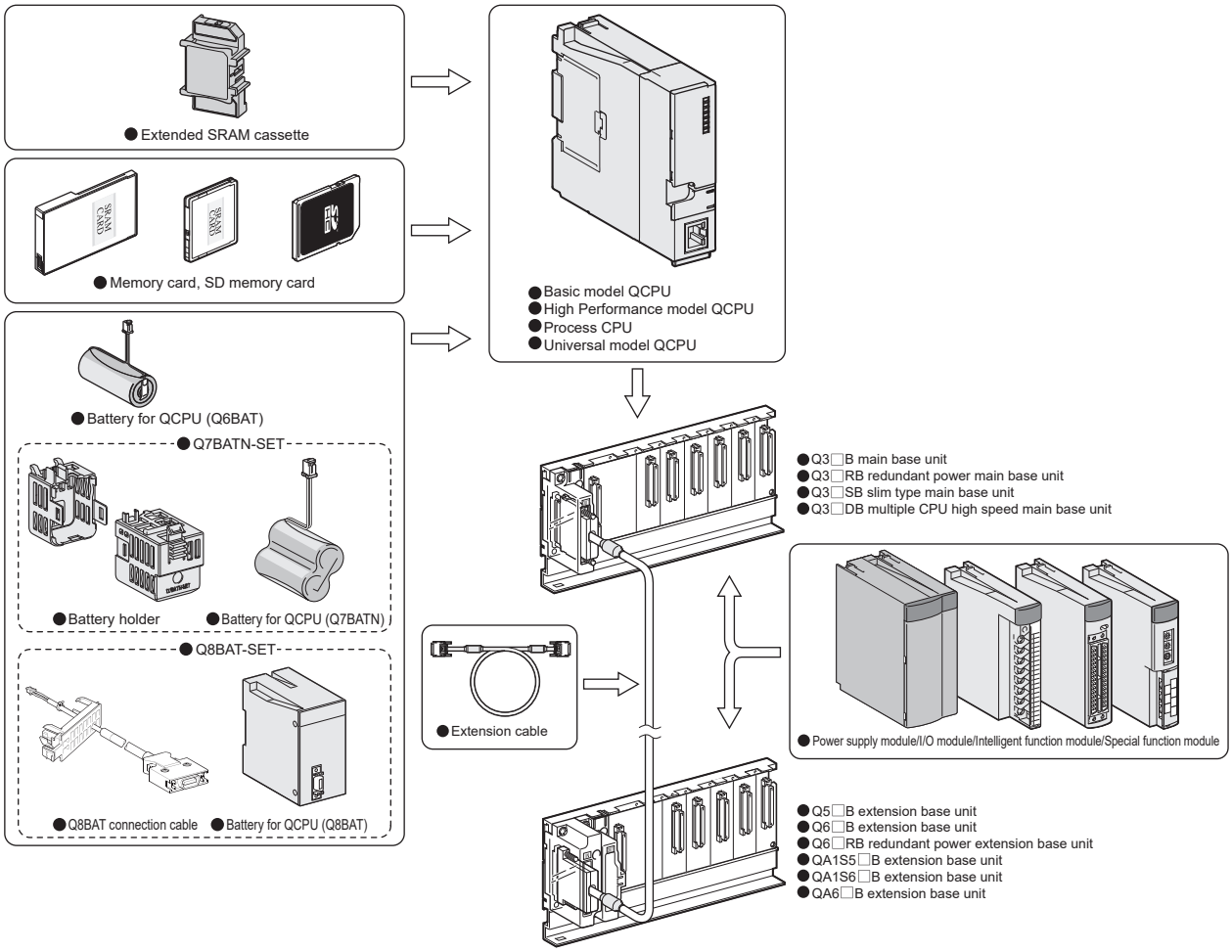

The combination of modules depends on the devices used in the configuration.
For the applicable combinations, refer to the following.

- CPU modules and base units, batteries, memory cards, SD memory cards, and/or extended SRAM cassettes (Page 35, Section 2.2)
- Base units and power supply modules (Page 203, CHAPTER 7)
- Main base units and extension base units (Page 239, CHAPTER 8)
- CPU modules and intelligent function modules or special function modules (Page 39, Section 2.3)

Point

To correctly configure a system, observe precautions described in Page 39, Section 2.3.

2.2 Component List

(1) Basic model QCPU

Item	Description	
Applicable main base unit*1	Main base unit	Q33B, Q35B, Q38B, Q312B
	Redundant power main base unit	Q38RB
	Slim type main base unit	Q32SB, Q33SB, Q35SB
	Multiple CPU high speed main base unit	Q35DB, Q38DB, Q312DB
Applicable extension base unit	Model requiring no power supply module	Q52B, Q55B
	Model requiring a Q series power supply module	Q63B, Q65B, Q68B, Q612B
	Redundant power extension base unit	Q68RB
Maximum number of connectable extension base units	Q00JCPU: 2 Q00CPU, Q01CPU: 4	
Maximum number of mountable modules	Q00JCPU: 16 (max. 16 slots) Q00CPU, Q01CPU: 24 (max. 24 slots)	
Extension cable	QC05B, QC06B, QC12B, QC30B, QC50B, QC100B	
Total length of extension cables	13.2m	
Memory extension	----	
Applicable battery	Q6BAT	

*1 The Q00JCPU does not require a power supply module and the main base unit since the module is an integrated combination of a power supply module and the main base unit.

(2) High Performance model QCPU

Item	Description	
Applicable main base unit	Main base unit	Q33B, Q35B, Q38B, Q312B
	Redundant power main base unit	Q38RB
	Slim type main base unit	Q32SB, Q33SB, Q35SB
	Multiple CPU high speed main base unit	Q35DB, Q38DB, Q312DB
Applicable extension base unit	Model requiring no power supply module	Q52B, Q55B
	Model requiring a Q series power supply module	Q63B, Q65B, Q68B, Q612B
	Redundant power extension base unit	Q68RB
	Model requiring no AnS series power supply module*1	QA1S51B, QA1S6ADP+A1S5□B*2
	Model requiring a AnS series power supply module*1	QA1S65B, QA1S68B, QA1S6ADP+A1S6□B*2
	Model requiring A series power supply module*1	QA65B, QA68B, QA6ADP+A6□B
	Model requiring no A series power supply module*1	QA6ADP+A5□B
Maximum number of connectable extension base units	7	
Maximum number of mountable modules	64 (max. 64 slots)	
Extension cable	QC05B, QC06B, QC12B, QC30B, QC50B, QC100B	
Total length of extension cables	13.2m	
Memory extension	SRAM card	Q2MEM-1MBSN, Q2MEM-1MBS, Q2MEM-2MBSN, Q2MEM-2MBS, Q3MEM-4MBS
	Flash card	Q2MEM-2MBF, Q2MEM-4MBF
	ATA card	Q2MEM-8MBA, Q2MEM-16MBA, Q2MEM-32MBA
Applicable battery	Q6BAT, Q7BATN, Q7BAT, Q8BAT	

*1 The A/AnS series extension base units are applicable only when the Q3□B is used as a main base unit.

*2 When the QA1S6ADP+A1S5□B/A1S6□B is used, the maximum number of extension base units is 1, and the maximum number of modules that can be mounted is 20 (with a maximum of 20 slots available). When the QA1S6ADP-S1+A1S5□B/A1S6□B is used, the maximum number of extension base units is 3, and the maximum number of modules that can be mounted is 36 (with a maximum of 36 slots available).

(3) Process CPU

Item	Description	
Applicable main base unit	Main base unit	Q33B, Q35B, Q38B, Q312B
	Redundant power main base unit	Q38RB
	Multiple CPU high speed main base unit	Q35DB, Q38DB, Q312DB
Applicable extension base unit	Model requiring no power supply module	Q52B, Q55B
	Model requiring a Q-series power supply module	Q63B, Q65B, Q68B, Q612B
	Redundant power extension base unit	Q68RB
Maximum number of connectable extension base units	7	
Maximum number of mountable modules	64 (max. 64 slots)	
Extension cable	QC05B, QC06B, QC12B, QC30B, QC50B, QC100B	
Total length of extension cables	13.2m	
Memory extension	SRAM card	Q2MEM-1MBSN, Q2MEM-1MBS, Q2MEM-2MBSN, Q2MEM-2MBS, Q3MEM-4MBS
	Flash card	Q2MEM-2MBF, Q2MEM-4MBF
	ATA card	Q2MEM-8MBA, Q2MEM-16MBA, Q2MEM-32MBA
Applicable battery	Q6BAT, Q7BATN, Q7BAT, Q8BAT	

(4) Universal model QCPU

Item		Description	
Applicable main base unit[*1]		Main base unit	Q33B, Q35B, Q38B, Q312B
		Redundant power main base unit	Q38RB
		slim type main base unit[*4]	Q32SB, Q33SB, Q35SB
		Multiple CPU high speed main base unit	Q35DB, Q38DB, Q312DB
Applicable extension base unit		Model requiring no power supply module	Q52B, Q55B
		Model requiring a Q-series power supply module	Q63B, Q65B, Q68B, Q612B
		Redundant power extension base unit	Q68RB
		Model requiring no AnS series power supply module[*3*4]	QA1S51B, QA1S6ADP+A1S5□B[*5]
		Model requiring an AnS series power supply module[*3*4]	QA1S65B, QA1S68B, QA1S6ADP+A1S6□B[*5]
		Model requiring no A series power supply module[*3*4]	QA65B, QA68B, QA6ADP+A6□B
		Model requiring an A series power supply module[*3*4]	QA6ADP+A5□B
Maximum number of connectable extension base units		Q00UJCPU: 2 Q00UCPU, Q01UCPU, Q02UCPU: 4 Other than above: 7	
Maximum number of mountable modules		Q00UJCPU: 16 (max. 16 slots) Q00UCPU, Q01UCPU: 24 (max. 24 slots) Q02UCPU: 36 (max. 36 slots) Other than above: 64 (max. 64 slots)	
Extension cable		QC05B, QC06B, QC12B, QC30B, QC50B, QC100B	
Total length of extension cables		13.2m	
Memory extension	Other than QnUDVCPU and QnUDPVCPU[*2]	SRAM card	Q2MEM-1MBSN, Q2MEM-1MBS, Q2MEM-2MBSN, Q2MEM-2MBS, Q3MEM-4MBS, Q3MEM-8MBS
		Flash card	Q2MEM-2MBF, Q2MEM-4MBF
		ATA card	Q2MEM-8MBA, Q2MEM-16MBA, Q2MEM-32MBA
	QnUDVCPU, QnUDPVCPU	SD memory card	NZ1MEM-2GBSD, NZ1MEM-4GBSD, NZ1MEM-8GBSD, NZ1MEM-16GBSD, L1MEM-2GBSD, L1MEM-4GBSD
		Extended SRAM cassette	Q4MCA-1MBS, Q4MCA-2MBS, Q4MCA-4MBS, Q4MCA-8MBS
Applicable battery		Q6BAT, Q7BATN, Q7BAT, Q8BAT	

*1 The Q00JCPU does not require a power supply module and the main base unit since the module is an integrated combination of a power supply module and the main base unit.

*2 Memory cards cannot be used in the Q00U(J)CPU and Q01UCPU.

*3 The A/AnS series extension base units can be used when the following conditions are satisfied.
- The serial number (first five digits) of the Universal model QCPU used is "13102" or later.
- The Q3□B or Q3□DB is used as a main base unit, or the Q00UJCPU is used.

*4 These base units cannot be used with the QnUDPVCPU.

*5 When the QA1S6ADP+A1S5□B/A1S6□B is used, the maximum number of extension base units is 1, and the maximum number of modules that can be mounted is 20 (with a maximum of 20 slots available). When the QA1S6ADP-S1+A1S5□B/A1S6□B is used, the maximum number of extension base units is 3, and the maximum number of modules that can be mounted is 36 (with a maximum of 36 slots available).

2.3 Precautions for System Configuration

This section describes restrictions on the system configuration using the Q series CPU module.

(1) Number of mountable modules

The number of mountable modules and supported functions are restricted depending on the module type.

(a) When the Basic model QCPU is used

Product	Model	Maximum number of modules/units per system
CC-Link IE Controller Network module	• QJ71GP21-SX • QJ71GP21S-SX	Only 1 module[*1]
MELSECNET/H module	• QJ71LP21 • QJ71BR11 • QJ71LP21-25 • QJ71LP21S-25 • QJ71LP21G • QJ71LP21GE • QJ71NT11B	
Ethernet module	• QJ71E71 • QJ71E71-B2 • QJ71E71-B5 • QJ71E71-100	Only 1 module
CC-Link module	• QJ61BT11 • QJ61BT11N	Up to 2 modules[*2]
DeviceNet master-slave module	• QJ71DN91	No restriction[*7]
Interrupt module	• QI60[*1]	Only 1 module[*3]
	• QX40H[*6] • QX70H[*6] • QX80H[*6] • QX90H[*6]	
High speed data logger module	• QD81DL96	Only 1 module[*5]
High speed data communication module	• QJ71DC96	Only 1 module[*5]
GOT	• GOT-A900 Series (for bus connection only)[*4] • GOT1000 Series (for bus connection only)[*4] • GOT2000 Series (for bus connection only)[*4]	Up to 5 units

*1 The number is a total of the CC-Link IE Controller Network module and MELSECNET/H module.

*2 Modules of function version B or later are available.

*3 The number is for interrupt modules with no interrupt pointer setting.
With interrupt pointer setting, there is no restriction on the number of modules.
For interrupt pointer setting, refer to the following.
Qn(H)/QnPH/QnPRHCPU User's Manual (Function Explanation, Program Fundamentals)

*4 For the available GOT models, refer to the following.
GOT-A900 Series User's Manual (GT Works2 Version2/GT Designer2 Version2 Compatible Connection System Manual)
GOT1000 Series Connection Manual (Mitsubishi Electric Products) for GT Works3
GOT2000 Series Connection Manual (Mitsubishi Electric Products) For GT Works3 Version1

*5 One module can be mounted for one control CPU.

*6 The module is available only when the interrupt module is selected by setting the function selector switch (SW2) to OFF.
*7 Use the QJ71DN91 whose serial number (first five digits) is "03052" or later.

(b) When the High Performance model QCPU or Process CPU is used

Product	Model	Maximum number of modules/units per system	
CC-Link IE Controller Network module[*1]	• QJ71GP21-SX • QJ71GP21S-SX	Up to 2 modules	Up to 4 modules in total
MELSECNET/H module	• QJ71LP21 • QJ71BR11 • QJ71LP21-25 • QJ71LP21S-25 • QJ71LP21G • QJ71LP21GE • QJ71NT11B	Up to 4 modules	
Ethernet module	• QJ71E71 • QJ71E71-B2 • QJ71E71-B5 • QJ71E71-100	Up to 4 modules	
CC-Link module	• QJ61BT11 • QJ61BT11N	No restriction[*2]	
MELSECNET/MINI-S3 data link module[*3]	• A1SJ71PT32-S3 • A1SJ71T32-S3	No restriction (Auto refresh setting not allowed)	
AnS Series special function module[*3]	• A1SD51S • A1SD21-S1 • A1SJ71J92-S3(When using GET/PUT service) • A1SJ71AP23Q • A1SJ71AR23Q • A1SJ71AT23BQ	Up to 6 modules in total	
Interrupt module	• A1SI61[*3]	Only 1 module	
	• QI60		
	• QX40H[*5] • QX70H[*5] • QX80H[*5] • QX90H[*5]		
High speed data logger module	• QD81DL96	Only 1 module[*6]	
High speed data communication module[*7]	• QJ71DC96	Only 1 module[*6]	
GOT	• GOT-A900 Series (only for bus connection)[*4] • GOT1000 Series (only for bus connection)[*4] • GOT2000 Series (for bus connection only)[*4]	Up to 5 units	

*1 Only the High Performance model QCPU whose serial number (first five digits) is "09012" or later and Process CPU whose serial number (first five digits) is "10042" or later can be used.
*2 One CPU module can control the following number of modules by setting CC-Link network parameters in a programming tool.
• CPU modules whose serial number (first five digits) is "08031" or earlier: up to 4 modules
• CPU modules whose serial number (first five digits) is "08032" or later: up to 8 modules
There is no restriction on the number of modules when the parameters are set with the CC-Link dedicated instructions. For the CC-Link system master/local modules whose parameters can be set by the dedicated instructions, refer to the following.
MELSEC-Q CC-Link System Master/Local Module User's Manual
*3 The module is available only when the High Performance model QCPU is used.
*4 For the available GOT models, refer to the following.
GOT-A900 Series User's Manual (GT Works2 Version2/GT Designer2 Version2 Compatible Connection System Manual)
GOT1000 Series Connection Manual (Mitsubishi Electric Products) for GT Works3
GOT2000 Series Connection Manual (Mitsubishi Electric Products) For GT Works3 Version1
*5 The module is available only when the interrupt module is selected by setting the function selector switch (SW2) to OFF.

*6 One module can be mounted for one control CPU.
*7 The function version of the High-Performance model QCPU must be B or later.

(c) When the Redundant CPU is used

For the modules with restriction on the number of mountable modules, refer to the following.

QnPRHCPU User's Manual (Redundant System)

(d) When the Universal model QCPU is used

Product	Model	Maximum number of modules/units per system
CC-Link IE Controller Network module*1	• QJ71GP21-SX • QJ71GP21S-SX	Up to 4 modules*2*3
MELSECNET/H module	• QJ71LP21 • QJ71BR11 • QJ71LP21-25 • QJ71LP21S-25 • QJ71LP21G • QJ71LP21GE • QJ71NT11B	
CC-Link IE Field network module*14	• QJ71GF11-T2	No restriction*8
Ethernet module	• QJ71E71 • QJ71E71-B2 • QJ71E71-B5 • QJ71E71-100	Up to 4 modules*3
CC-Link module	• QJ61BT11 • QJ61BT11N	No restriction*4*5
MELSECNET/MINI-S3 data link module*11	• A1SJ71PT32-S3 • A1SJ71T32-S3	No restriction (Auto refresh setting not allowed)
DeviceNet master-slave module	• QJ71DN91	No restriction*13
AnS series special function module*11	• A1SD51S • A1SD21-S1 • A1SJ71J92-S3 (When using GET/PUT service) • A1SJ71AP23Q • A1SJ71AR23Q • A1SJ71AT23BQ	Up to 6 modules in total
Interrupt module	• A1SI61*11	Only 1 module*6
	• QX40H*10 • QX70H*10 • QX80H*10 • QX90H*10	
High speed data logger module*12	• QD81DL96	Only 1 module*9
High speed data communication module	• QJ71DC96	Only 1 module*9
GOT	• GOT1000 Series (only for bus connection)*7 • GOT2000 Series (for bus connection only)*7	Up to 5 units

*1 Only the CC-Link IE Controller Network module whose serial number (first five digits) is "09042" or later can be used.
*2 The number is a total of the CC-Link IE Controller Network modules and MELSECNET/H network modules.
*3 The number of mountable modules for the Q00UJCPU, Q00UCPU, and Q01UCPU is only one module, and two modules for the Q02UCPU.

*4 The function version of the Universal model QCPU must be B or later.

*5 One CPU module can control the following number of modules by setting CC-Link network parameters in a programming tool.
- Q00UJCPU, Q00UCPU, Q01UCPU: up to 2 modules
- Q02UCPU: up to 4 modules
- CPU modules other than above: up to 8 modules

There is no restriction on the number of modules when the parameters are set with the CC-Link dedicated instructions.
For the CC-Link system master/local modules whose parameters can be set with the dedicated instructions, refer to the following.

MELSEC-Q CC-Link System Master/Local Module User's Manual

*6 The number is for interrupt modules with no interrupt pointer setting.
With interrupt pointer setting, there is no restriction on the number of modules.
For interrupt pointer setting, refer to the following.

QnUCPU User's Manual (Function Explanation, Program Fundamentals)

*7 For the available GOT models, refer to the following.

GOT1000 Series Connection Manual (Mitsubishi Electric Products) for GT Works3

GOT2000 Series Connection Manual (Mitsubishi Electric Products) For GT Works3 Version1

*8 One CPU module can control the following number of modules by setting CC-Link network parameters in a programming tool.
- Q00UJCPU, Q00UCPU, Q01UCPU: up to 2 modules
- Q02UCPU: up to 4 modules
- CPU modules other than above: up to 8 modules

There is no restriction on the number of modules when the parameters are set with the CC-Link IE Field Network dedicated instructions.
For the CC-Link IE Field Network modules whose parameters can be set with the dedicated instructions, refer to the following.

MELSEC-Q CC-Link IE Field Network Master/Local Module User's Manual

*9 One module can be mounted for one control CPU.

*10 The module is available only when the interrupt module is selected by setting the function selector switch (SW2) to OFF.

*11 This module is applicable only when the Universal model QCPU whose serial number (first five digits) is "13102" or later is used. (Except for the QnUDPVCPU)

*12 The High-speed Universal model QCPU and Universal model Process CPU support only the high speed data logger module whose serial number (first five digits) is "14122" or later.

*13 Use the QJ71DN91 whose serial number (first five digits) is "03052" or later.

*14 Use the Universal model QCPU whose serial number (first five digits) is "12012" or later.

(2) Modules with restrictions when used with the Built-in Ethernet port QCPU

The following table lists modules with restrictions when used with the Built-in Ethernet port QCPU.

Product	Model	Serial number (first five digits)
MELSECNET/H module	QJ71LP21-25	Some modules have restrictions depending on the use conditions.*1
	QJ71LP21S-25	
	QJ71LP21G	
	QJ71LP21GE	
	QJ71BR11	
Serial communication module	QJ71C24N	"10042" or later (No restrictions when used with the QnUDVCPU or QnUDPVCPU)
	QJ71C24N-R2	
	QJ71C24N-R4	
Web server module	QJ71WS96	"10012" or later ("14122" or later when used with the QnUDVCPU or QnUDPVCPU)
MES interface module	QJ71MES96	

*1 If the following conditions are all met, use the MELSECNET/H module whose serial number (first five digits) is "10042" or later.

1) A multiple CPU system containing the Built-in Ethernet port QCPU is configured.
2) A programming tool or GOT is connected to an Ethernet port of the Built-in Ethernet port QCPU.
3) The programming tool or GOT connected accesses another station via the MELSECNET/H module controlled by another CPU module.
4) The access target CPU module on another station is A/QnA series.

(3) Number of available slots

Empty slots are included in the number of available slots (modules) in the base unit.
(One slot is occupied even when "empty" and "0 points" are set for the slot 2 as shown in the following figure.)
The number of available slots (modules) varies depending on the base unit.

Page 239, CHAPTER 8

For the assignment concepts of base units and I/O numbers, refer to the following.

User's manual for the CPU module used (Function Explanation, Program Fundamentals)

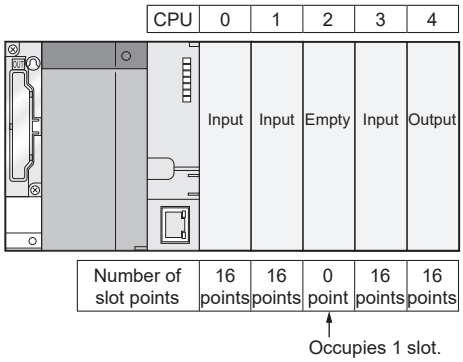

(4) Power capacity

The power may be insufficient depending on the combination of the mounted modules or the number of the mounted modules. When mounting modules, consider the power capacity.
If the power is insufficient, change the combination of modules so that the power is sufficient.

(5) External devices connected to Built-in Ethernet port QCPU

When connecting external devices to Built-in Ethernet port QCPU, power off the module and the external devices before connecting.

(6) Precautions for the number of mountable modules

Mount modules so that the total number of I/O points does not exceed the point range of the CPU module.
Modules can be mounted in any slot within the available range.
Even if the total number of slots of the main base unit and extension base units exceeds the number of available slots (for example, even if six12-slot base units are used), no error occurs as long as modules are mounted within the available range.
If a module is mounted exceeding the available range, "SP.UNIT LAY ERR." (error code: 2124) occurs.

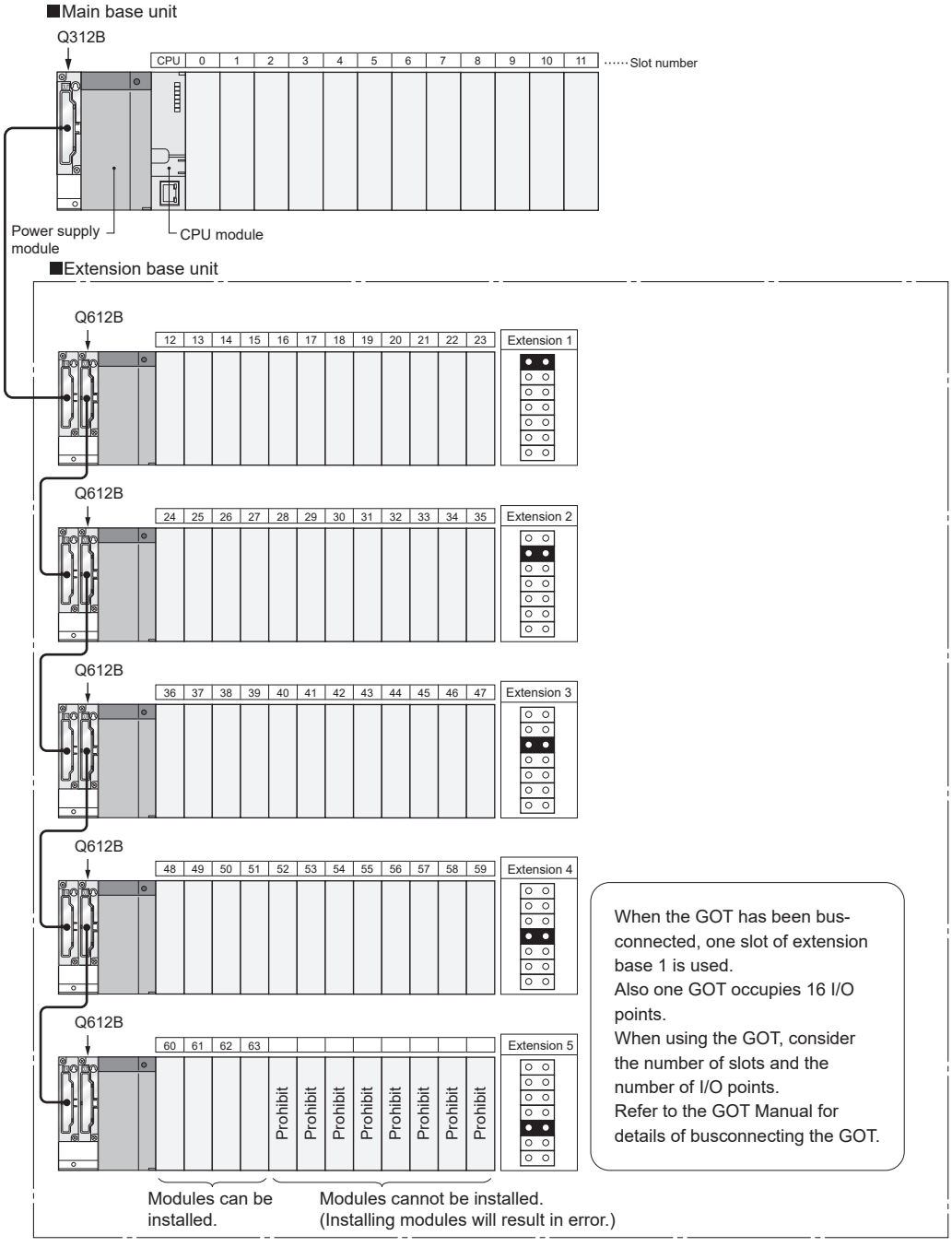

(7) Precautions when using AnS/A series modules

1) When using the AnS series special function modules shown below, a limitation is placed on an accessible device range.
   • A1SJ71J92-S3 type JEMANET interface module
   • A1SD51S type intelligent communication module

Device	Accessible device range
Input (X), Output (Y)	X/Y0 to 7FF
Internal relay (M), Latch relay (L)	M/L0 to 8191
Link relay (B)	B0 to FFF
Timer (T)	T0 to 2047
Counter (C)	C0 to 1023
Data register (D)	D0 to 6143
Link register (W)	W0 to FFF
Annunciator (F)	F0 to 2047

2) The modules listed below cannot be used.

Product	Model
MELSECNET/10 network module	A1SJ71LP21, A1SJ71BR11, A1SJ71LR21, A1SJ71QLP21, A1SJ71QLP21S, A1SJ71QBR11, A1SJ71QLR21
MELSECNET(II), /B data link module	A1SJ71AP21, A1SJ71AR21, A1SJ71AT21B
Ethernet module	A1SJ71E71N-T, A1SJ71E71N3-T, A1SJ71E71N-B2(-B5), A1SJ71QE71N-T, A1SJ71QE71N3-T, A1SJ71QE71N-B2(-B5)
Serial communication module, computer link module	A1SJ71UC24-R2(-PRF), A1SJ71QC24(-R2), A1SJ71QC24N(-R2), A1SJ71QC24N1(-R2)
Computer link/multidrop link module	A1SJ71UC24-R4*1
CC-Link system master/local module	A1SJ61BT11, A1SJ61QBT11
ME-NET interface module	A1SJ71ME81

*1 Only multidrop link function can be used. The computer link function and printer function cannot be used.

3) The AnS/A series dedicated instructions for the following modules cannot be used.
   Rewriting using the FROM or TO instruction is required.

Product	Model
High speed counter module	A1SD61, A1SD62, A1SD62D(-S1), A1SD62E
MELSECNET/MINI-S3	A1SJ71PT32-S3, A1SJ71T32-S3
Positioning module	A1SD75P1-S3(P2-S3/P3-S3)
ID module	A1SJ71ID1-R4, A1SJ71ID2-R4

4) System configurations and functions are partially restricted when writing the parameters set under the "High speed interrupt fixed scan interval" setting.
For the restrictions, refer to the following.
User's manual for the CPU module used (Function Explanation, Program Fundamentals)
5) For the restrictions on mounting an AnS series module on the QA1S6ADP+A1S5oB/A1S6oB, refer to the following.
QA1S6ADP Q-AnS Base Unit Conversion Adapter User's Manual
QA1S6ADP-S1 Q-AnS Base Unit Conversion Adapter User's Manual
6) For restrictions on mounting the A series module on the QA6□B or QA6ADP+A5□B/A6□B, refer to the following.
QA65B/QA68B Extension Base Unit User's Manual
QA6ADP QA Conversion Adapter Module User's Manual
7) For restrictions on using varying AnS/A series compatible extension base units, refer to Page 80, Section 4.3.

2.3.1 Bus connection of GOT

In the system with the Q series CPU module, the GOT can be bus-connected using the extension cable connector of the main base unit or extension base unit.
This section describes the system configuration when a GOT is bus-connected to the CPU module.
For details of bus-connection of GOT, refer to the following.

GOT-A900 Series User's Manual (Connection)
GOT1000 Series Connection Manual (Mitsubishi Electric Products) for GT Works3
GOT2000 Series Connection Manual (Mitsubishi Electric Products) For GT Works3 Version1

(1) GOT recognized by CPU module

When a GOT is bus-connected, the CPU module recognizes the GOT as an intelligent function module with 16 I/O points.
For this reason, the I/O numbers must be assigned to the CPU module in the GOT setup.
(When bus-connecting a GOT, one extension level (16 points x 10 slots) must be occupied.)
For details of the GOT setup, refer to the following.

GOT-A900 Series Operating Manual (Extension Function /Option Function)
GT15 User's Manual
GT16 User's Manual (Basic Utility)

(2) Maximum number of GOTs

Up to five GOTs can be bus-connected.

(3) Precautions

- When a GOT is bus-connected to the CPU module, connect the GOT after the last base unit in the system. Do not position the GOT between base units.

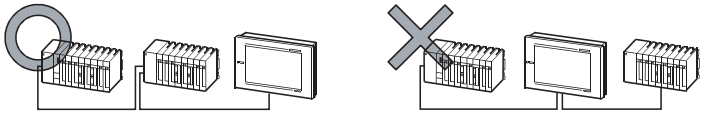

- Extension cables for connecting a GOT on the bus must be a maximum of 13.2m in total length.
- A bus extension connector box (A9GT-QCNB) is required when a first GOT connected on the bus is installed 13.2m or more away from the main base unit. (Note that the bus extension connector box cannot be used for the Q00JCPU.)
  For details of the A9GT-QCNB, refer to the following.
  A9GT-QCNB type Bus extension connector box User's Manual
- When a redundant base unit (Q3□RB/Q6□RB/Q6□WRB) is used, a GOT cannot be bus-connected.
- When the QA1S6□B extension base unit is used, connect the GOT after the last extension base unit in the system, but assign I/O numbers subsequent to those of the Q6□B/Q5□B.

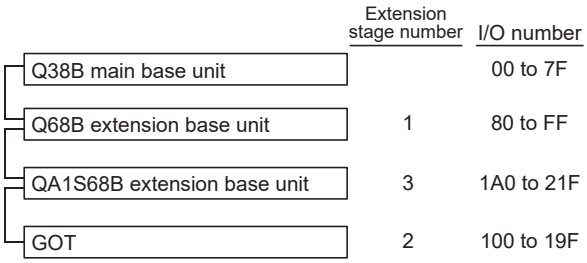

- When the QA1S5□B, QA1S6ADP+A1S5□B/A1S6□B, QA6□B, or QA6ADP+A5□B/A6□B extension base unit is used, a GOT cannot be bus-connected.
- Before starting up the CPU module, set the extension level number and slot number (initial setting) in the GOT to be bus-connected.
- Apply the power to the CPU module and GOT by either of the following way.
  1) Simultaneously power on the CPU module and GOT.
  2) Power on the CPU module first, and then the GOT.
- For the applicable GOT, refer to Page 39, Section 2.3 (1).
- Ground the FG wire of the cable connecting the programmable controller and the GOT on the GOT side. For the grounding method, refer to the manual for the GOT used.

(4) Outline of system configuration

■Main base unit ···The figure shows the configuration when 16-point modules are loaded to each slot.

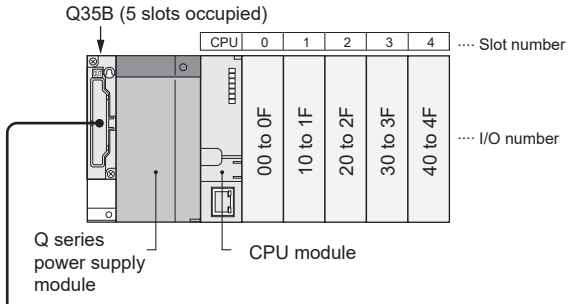

■Extension base unit ···The figure shows the configuration when 16-point modules are loaded to each slot.

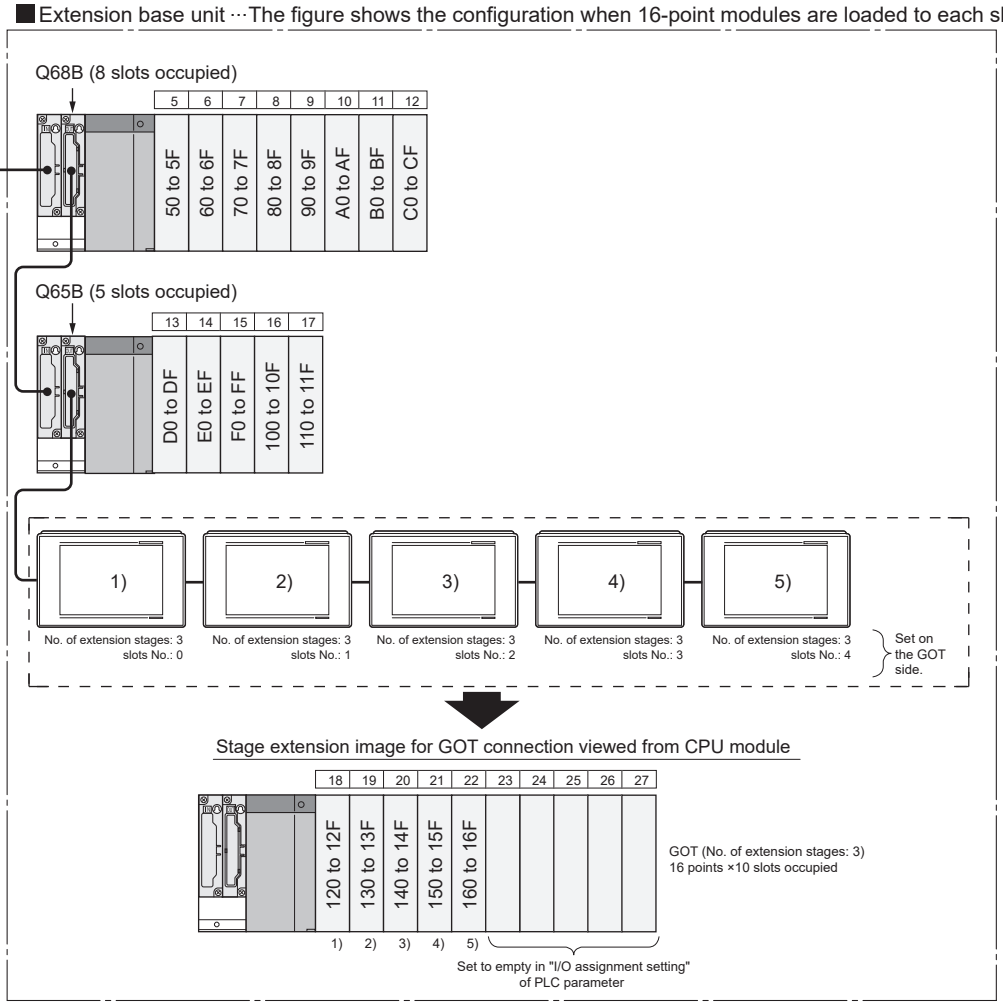

Maximum number of connectable extension base units (for GOT bus connection)	• Q00JCPU and Q00UJCPU: 2 • Q00CPU, Q01CPU, Q00UCPU, Q01UCPU, or Q02UCPU: 4 • CPU modules other than above: 7	The final level is for GOT only.
Maximum number of mountable modules	• Q00JCPU or Q00UJCPU: 16 - (number of connected GOTs) • Q00CPU, Q01CPU, Q00UCPU, or Q01UCPU: 24 - (number of connected GOTs) • Q02UCPU: 36 - (number of connected GOTs) • CPU modules other than above: 64 - (number of connected GOTs)	
Applicable main base unit	Q33B, Q35B, Q38B, Q312B, Q35DB, Q38DB, Q312DB	
Applicable extension base unit	Model requiring no power supply module	Q52B, Q55B
	Model requiring a Q-series power supply module	Q63B, Q65B, Q68B, Q612B
	Model requiring a AnS series power supply module Note 2.2	QA1S65B, QA1S68B
Applicable extension cable	QC05B, QC06B, QC12B, QC30B, QC50B, QC100B	
Q series power supply module Note 2.1	Q61P-A1, Q61P-A2, Q61P, Q61P-D, Q62P, Q63P, Q64P, Q64PN	
AnS series power supply module Note 2.2	A1S61PN, A1S62PN, A1S63P	

Note 2.1 Basic Universal

Since the Q00JCPU and Q00UJCPU are modules integrated with a power supply module and main base unit, the main base unit (Q3☐B) and Q series power supply module are not required.

Note 2.2 High performance Universal

Only the High Performance model QCPU or the Universal model QCPU whose serial number (first five digits) is "13102" or later supports the use of these base units/modules. (However, the QnUDPVCPU does not support the use of them.)

2.3.2 Peripheral device configuration

This section describes peripheral devices that can be used in a system where the Basic model QCPU, High Performance model QCPU, Process CPU, or Universal model QCPU is installed.

(1) When the Basic model QCPU is used

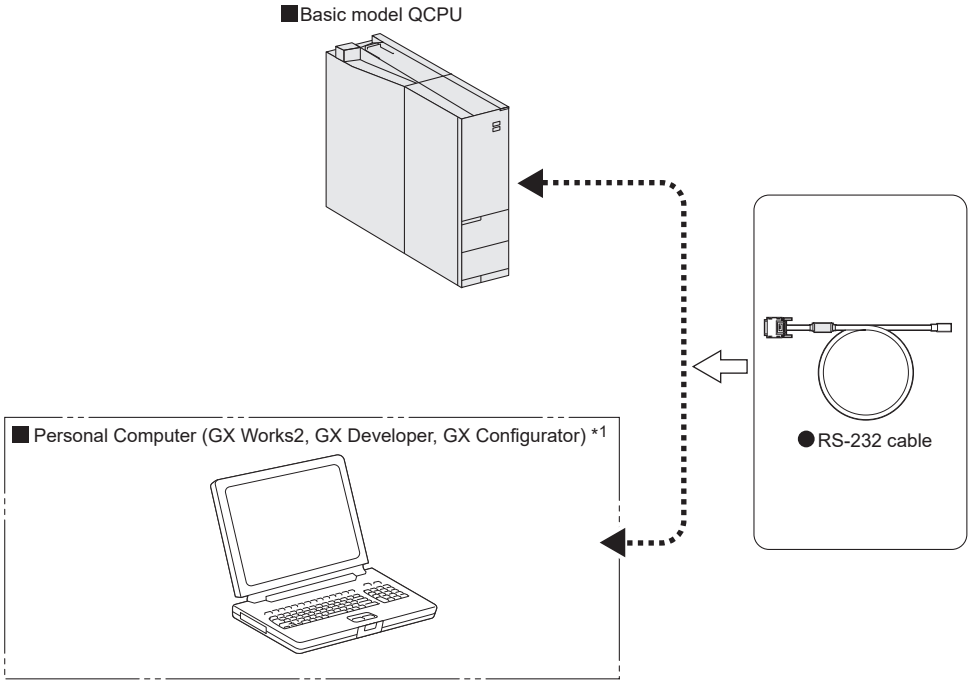

*1 For the versions of GX Works2, GX Developer, and GX Configurator that can be used with the Basic model QCPU, refer to Page 655, Appendix 5.1.

(2) When the High Performance model QCPU is used

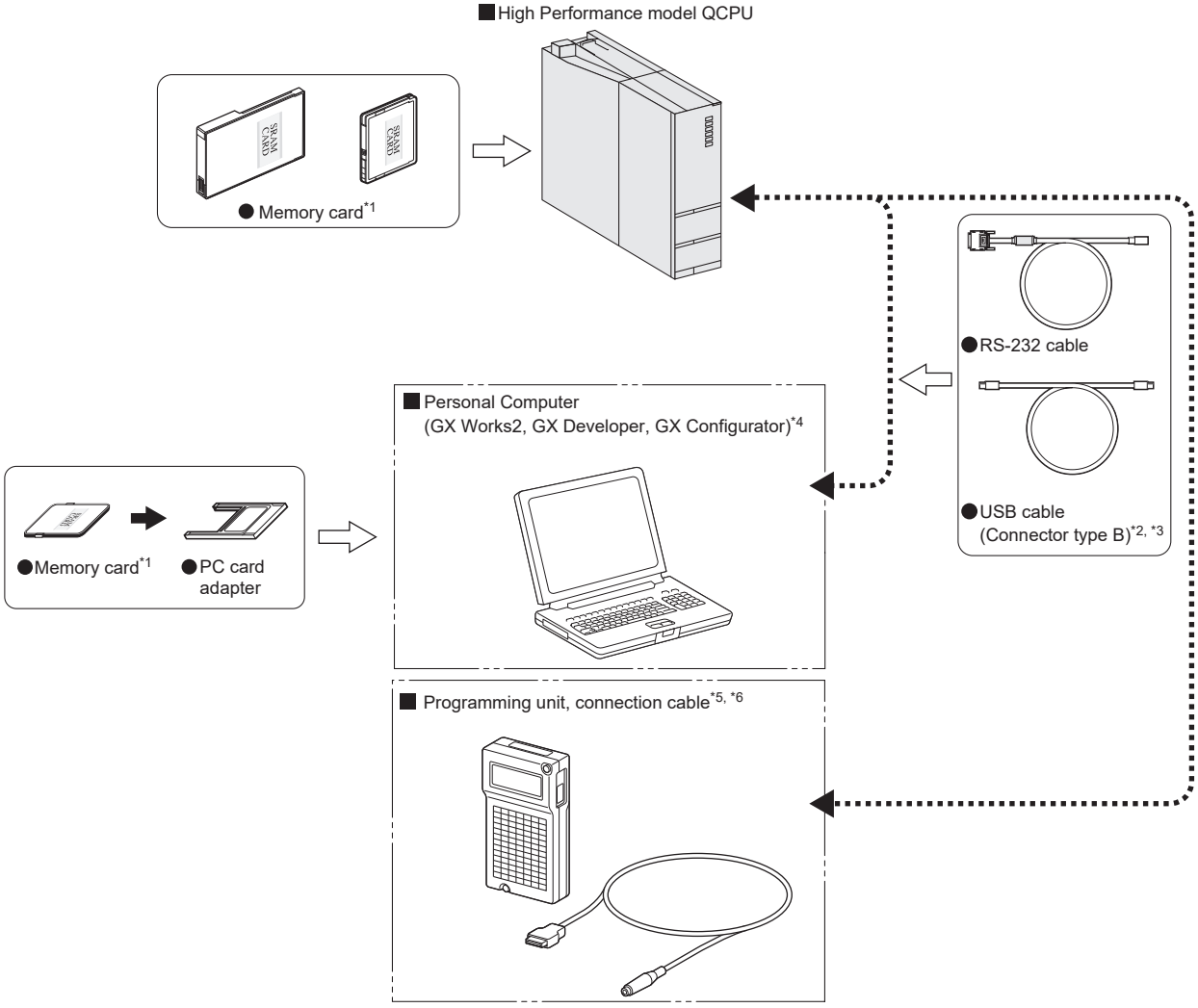

*1 Format ATA cards by a programming tool only. (Page 256, Section 9.3)

*2 Not applicable to the Q02CPU.

*3 For the writing method to a memory card and USB cables, refer to the following.

Operating manual for the programming tool used

*4 For the GX Works2, GX Developer and GX Configurator versions that can be used with the High Performance model QCPU, refer to Page 655, Appendix 5.1.

*5 For inquiries and orders of a programming unit (EPU01) and connection cable (EPU20R2CBL), please contact your local Mitsubishi Electric Engineering Co., Ltd. sales office.

*6 Programming units cannot be used when the "High speed interrupt fixed scan interval" parameter is written to the High Performance model QCPU whose serial number (first five digits) is “04012” or later.

(3) When the Process CPU is used

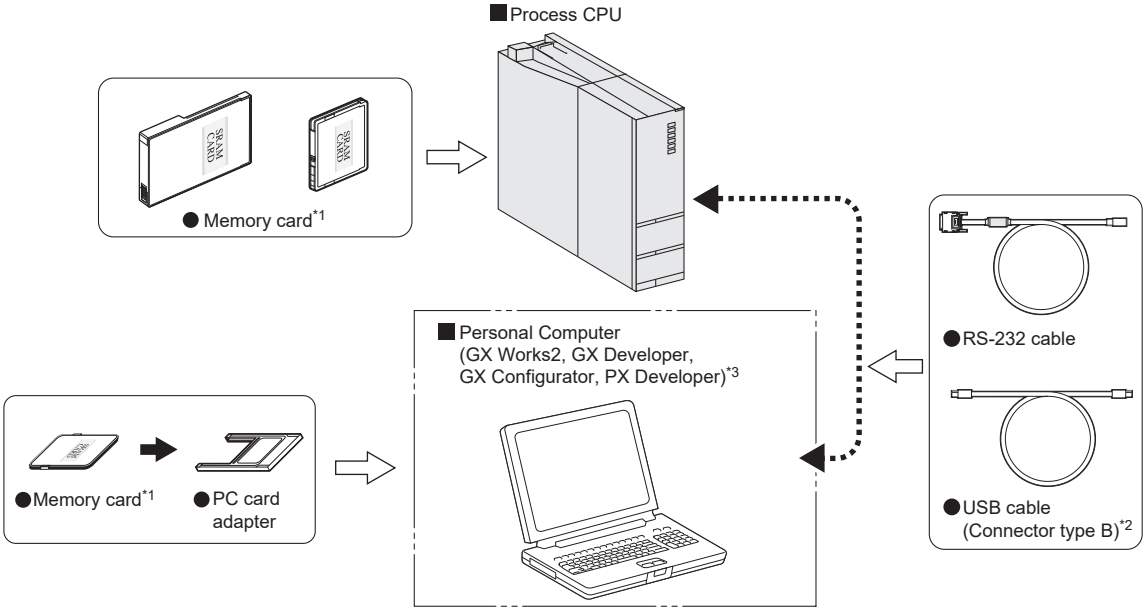

*1 Format ATA cards by a programming tool only. (Page 256, Section 9.3)

*2 For the writing method to a memory card and USB cables, refer to the following.

Operating manual for the programming tool used

*3 For the GX Works2, GX Developer, GX Configurator, and PX Developer versions that can be used with the Process CPU, refer to Page 655, Appendix 5.1.

(4) When the Universal model QCPU is used

(a) QnU(D)(H)CPU

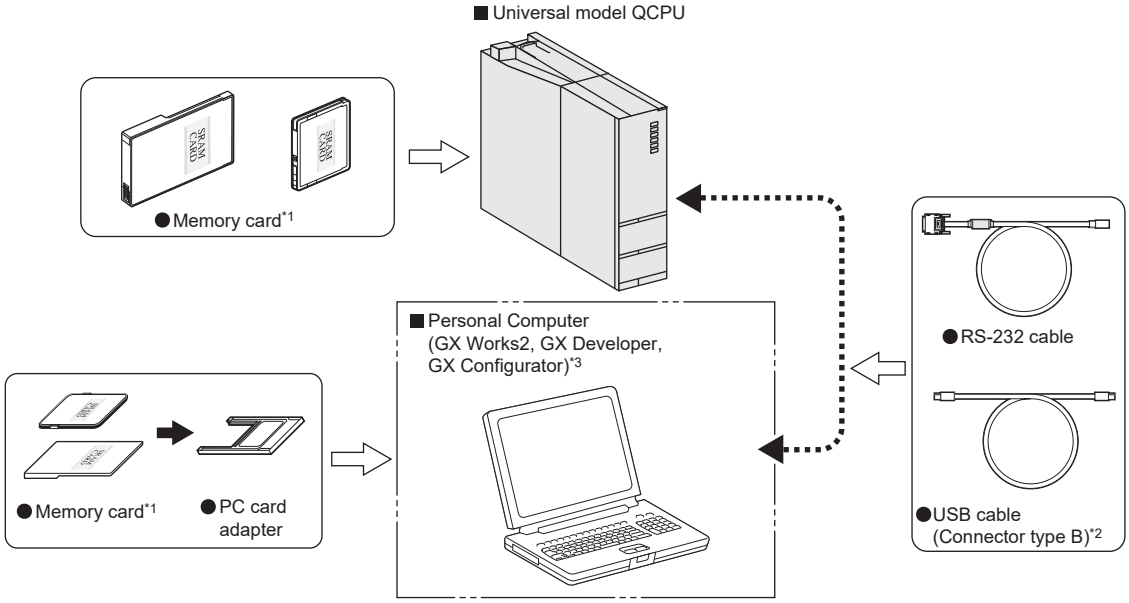

*1 Format ATA cards by a programming tool only. (Page 256, Section 9.3)

*2 For the writing method to a memory card and USB cables, refer to the following.

Operating manual for the programming tool used

*3 For the GX Works2, GX Developer and GX Configurator versions that can be used with the Universal model QCPU, refer to Page 655, Appendix 5.1.

(b) QnUDVCPU, QnUDPVCPU

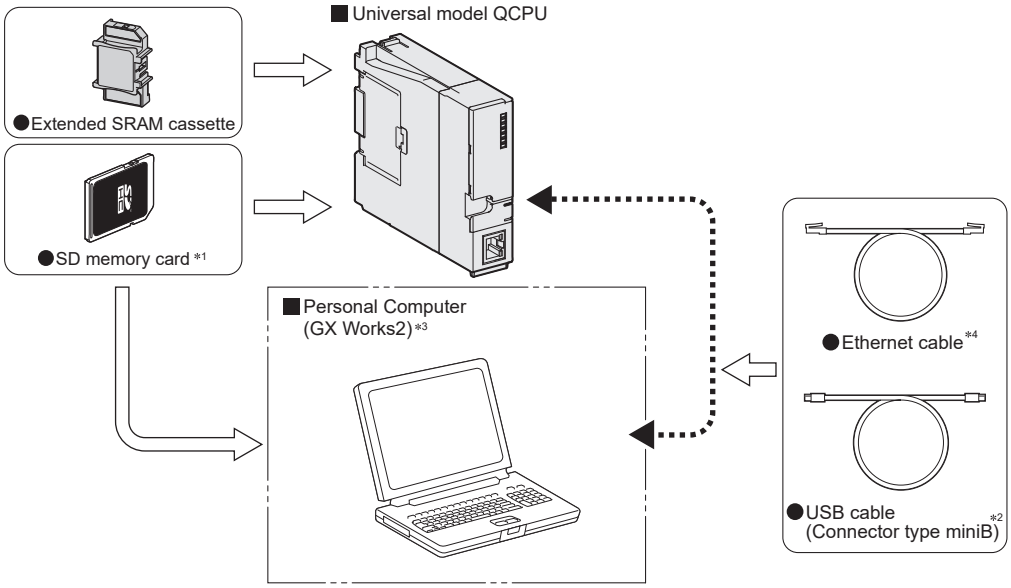

*1 For the writing method to an SD memory card, refer to the following.

GX Works2 Version 1 Operating Manual (Common)

*2 For USB cables, refer to the following.

GX Works2 Version 1 Operating Manual (Common)

*3 For the GX Works2 versions that can be used with the Universal model QCPU, refer to Page 655, Appendix 5.1.

*4 Use the following Ethernet cables.

- For 10BASE-T connection: Cables compliant to Ethernet standards, category 3 or higher (STP/UTP cables (In an environment subject to electric noise, use shielded twisted pair (STP) cables.))
- For 100BASE-TX connection: Cables compliant to Ethernet standards, category 5 or higher (STP cables)

(c) QnUDE(H)CPU

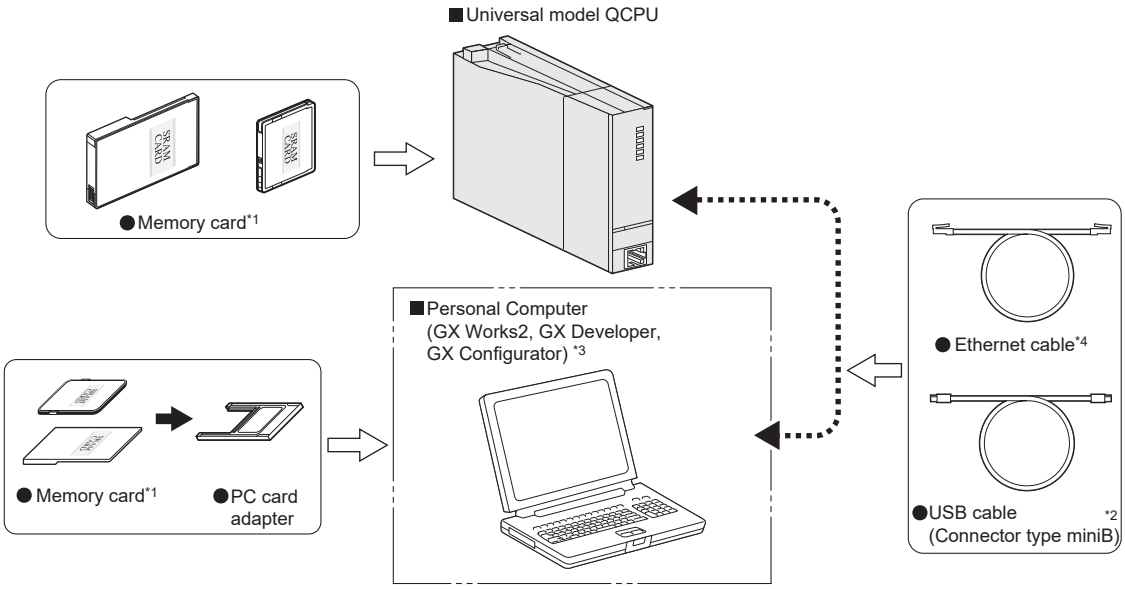

*1 Format ATA cards by a programming tool only. (Page 256, Section 9.3)

*2 For the writing method to a memory card and USB cables, refer to the following.

Operating manual for the programming tool used

*3 For the GX Works2, GX Developer and GX Configurator versions that can be used with the Universal model QCPU, refer to Page 655, Appendix 5.1.

*4 Use the following Ethernet cables

- For 10BASE-T connection: Cables compliant to Ethernet standards, category 3 or higher (STP/UTP cables (In an environment subject to electric noise, use shielded twisted pair (STP) cables.))
- For 100BASE-TX connection: Cables compliant to Ethernet standards, category 5 or higher (STP cables)

CHAPTER 3 CPU MODULE START-UP PROCEDURES

This chapter provide the start-up procedure for the Q Series CPU module on the assumption that programs and parameters have been created separately.
For the start-up procedures for a redundant system configured with a Redundant CPU, refer to the following.

QnPRHCPU User's Manual (Redundant System)

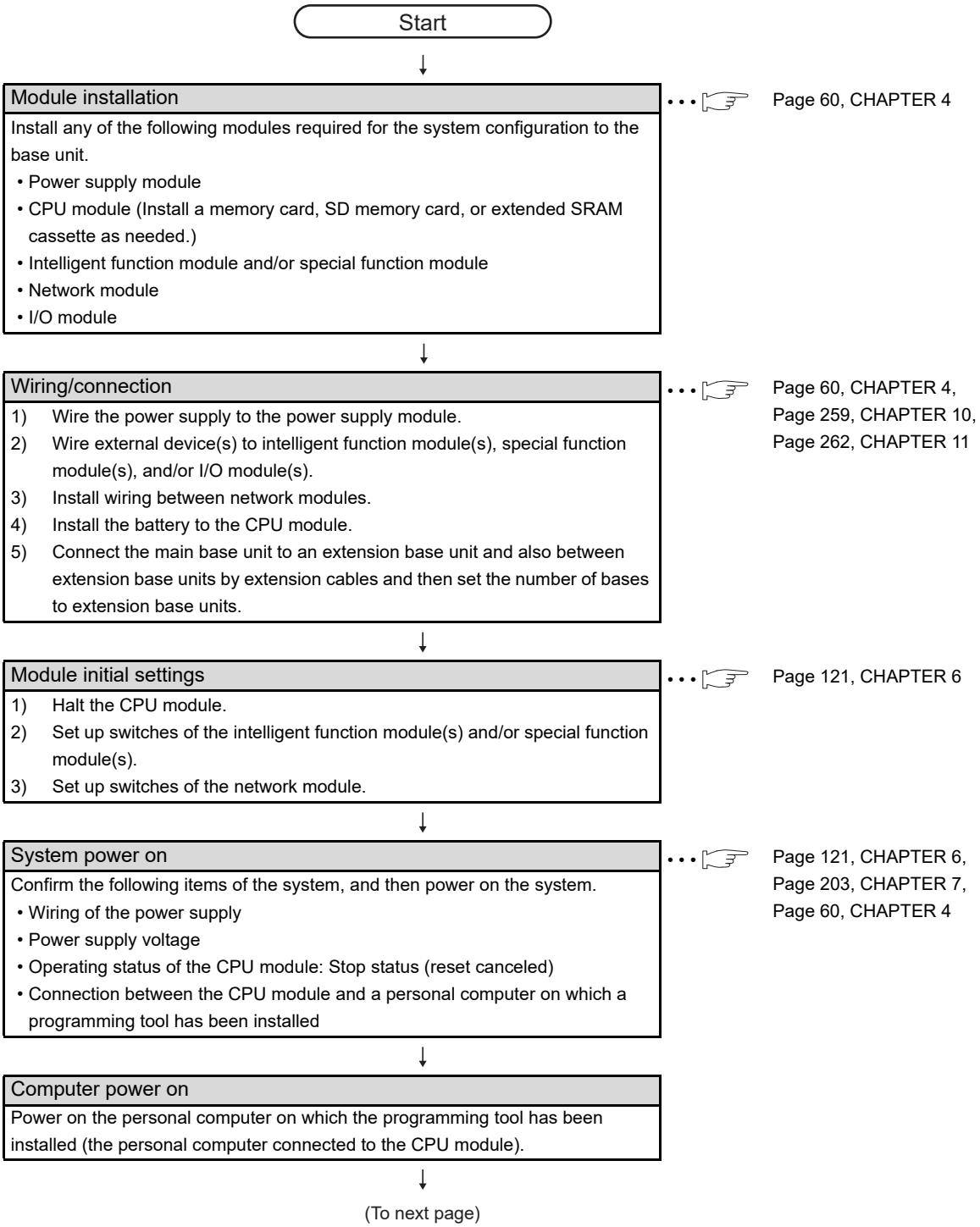

(From previous page)

↓

Programming tool start-up

Start up the programming tool that has been installed on the personal computer connected to the CPU module.

• • • 📖 Operating manual for the programming tool used

↓

Memory formatting

Format the memory to be used by the "PC Memory Formatting" of Programming tool.*3

• • • 📖 Operating manual for the programming tool used

↓

Writing the parameters and programs

Write the parameters and programs created by the programming tool into the CPU module.

• • • 📖 Operating manual for the programming tool used

↓

System reboot

Turn off and on the system power supply, or reset the CPU module.

• • • ☞ Page 121, CHAPTER 6

↓

Error check

Confirm that the ERR.LED of the CPU module is off.
If the ERR.LED is on or flashing, identify the error cause by the system monitor or diagnostics of the programming tool*1 to eliminate the error cause.
If the error is related to the parameters or programs, correct them.

• • • ☞ Page 292, CHAPTER 15

↓

Running of the CPU module*2

Run the CPU module, and then confirm that the RUN LED of the CPU module turns on.

• • • ☞ Page 121, CHAPTER 6

↓

Completed

*1 The following types of diagnostics are available.
- PLC diagnostics
- Ethernet diagnostics
- CC IE Control diagnostics
- CC IE Field diagnostics
- MELSECNET diagnostics
- CC-Link and CC-Link/LT diagnostics

*2 CPU modules with a large-capacity program memory may require time before they go into the RUN status.

*3 The Basic model QPCU of the function version B or later does not require formatting the standard RAM, but it requires clearing the standard RAM. For clearing the standard RAM (file register), refer to the following.

📖 Qn(H)/QnPH/QnPRHCPU User's Manual (Function Explanation, Program Fundamentals)

Point

For details of the wiring, connection, and initial settings of intelligent function modules, special function modules, and network modules, refer to manuals for intelligent function modules, special function modules, and network module used.

CHAPTER 4 INSTALLATION AND WIRING

4.1 Installation Environment and Installation Position

4.1.1 Installation environment

Install the programmable controller according to the installation environment shown in the general specifications.
(☞ Page 119, CHAPTER 5)
Do not install the programmable controller to the place where:

- An ambient temperature is outside the range of 0 to 55°C;
- Ambient humidity is outside the range of 5 to 95%RH,
- Condensation occurs due to rapid temperature change;
- Corrosive gas or combustible gas is present;
- Conductive powder such as dust and iron powder, oil mist, salinity, or organic solvent is filled;
- The programmable controller is exposed to direct sunlight;
- A strong electric field or strong magnetic field is generated; and
- The programmable controller is subject to vibration and shock.

4.1.2 Installation position

When installing the programmable controller to a control panel, fully consider its operability, maintainability, and environmental resistance.

(1) Installation position

To ensure good ventilation and ease module change, provide clearance between the module top/bottom and structures/parts as shown below.

(a) In case of main base unit or extension base unit

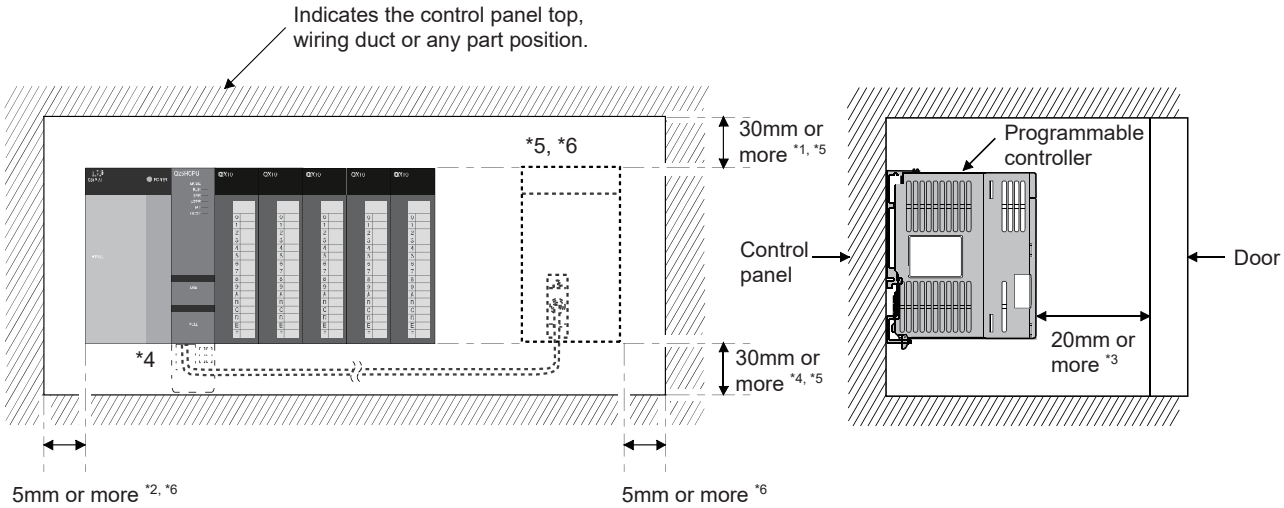

*1 30mm or more when a wiring duct with a height of 50mm or less is used. In other cases, 40mm or more.
*2 20mm or more when the adjacent module is not removed and the extension cable is connected.
*3 80mm or more for the connector type. 140mm or more for installing a tracking cable when using a Redundant CPU. 80mm or more for installing the Q8BAT cable when using the Q8BAT.
*4 50mm or more when the Q7BATN is mounted, and 45mm or more when the Q7BAT is mounted.
*5 30mm or more from the top and bottom of the Q8BAT when the Q8BAT is mounted.
*6 5mm or more from the right and left of the Q8BAT when the Q8BAT is mounted.

(b) In case of slim type main base unit

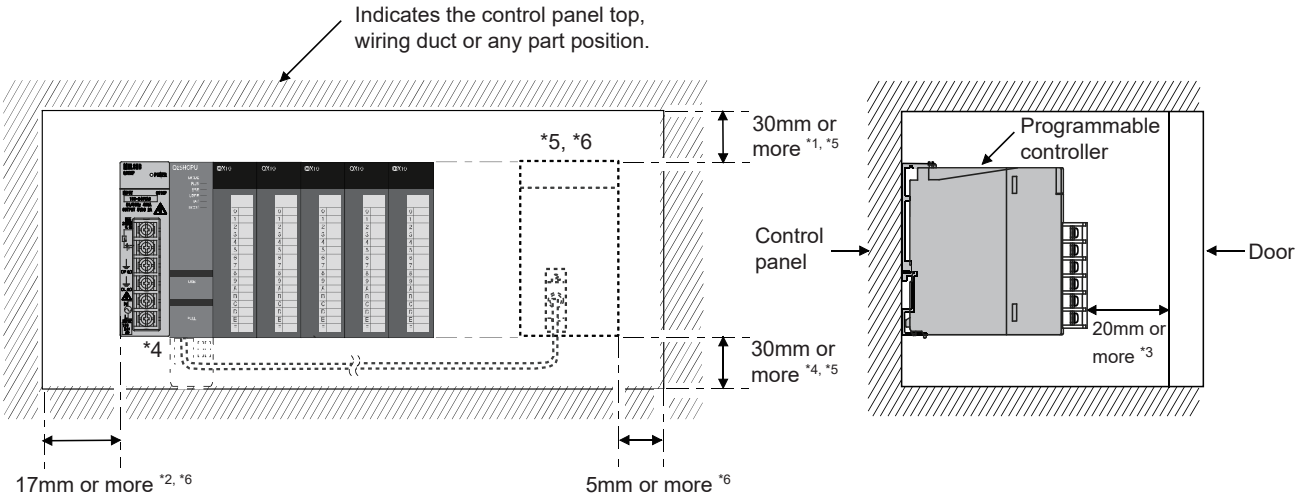

*1 30mm or more when using a wiring duct with a height of 50mm or less. In other cases, 40mm or more.

*2 The cable of the power supply module of the slim type main base unit protrudes out of the left end of the module. Install the module while reserving 17mm or more wiring space.
If the cable sheath is susceptible to damage caused by a structural object or part on the left side of the module, take a protective measure with spiral tube or a similar insulator.

*3 80mm or more for the connector type. 80mm or more for installing the Q8BAT cable when using the Q8BAT.

*4 50mm or more when the Q7BATN is mounted, and 45mm or more when the Q7BAT is mounted.

*5 30mm or more from the top and bottom of the Q8BAT when the Q8BAT is mounted.

*6 5mm or more from the right and left of the Q8BAT when the Q8BAT is mounted.

(2) Module mounting orientation

- To ensure good ventilation for heat dispassion, install the programmable controller in the orientation as shown below.

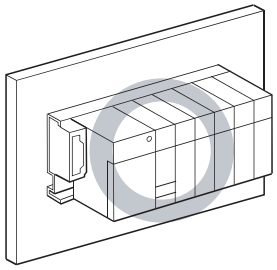

- Do not mount the programmable controller in the orientations as shown below.

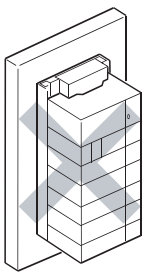

Vertical mounting

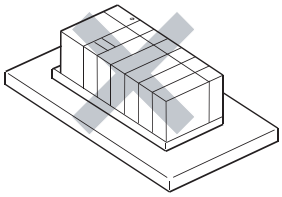

Horizontal installation

(3) Installation surface

Install the base unit on a flat surface. If the surface where the base unit is installed is not even, this may strain the printed circuit boards and cause malfunctions.

(4) Installation in an area where other devices are installed

Do not install a base unit in proximity to vibration sources such as large magnetic contractors and no-fuse circuit breakers. Install a base unit on a separate control panel or away from vibration sources.

(5) Distances from other devices

In order to avoid the effects of radiated noise and heat, provide the clearances indicated below between the programmable controller and devices that generate noise or heat (contactors and relays).

- Required clearance in front of programmable controller : at least 100mm*1
- Required clearance on the right and left of programmable controller : at least 50mm

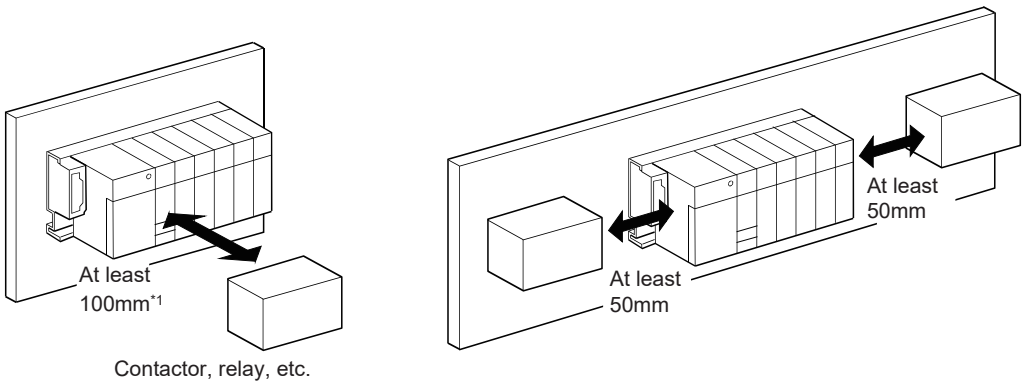

*1 When using a Redundant CPU, keep a distance of 100mm or more between the programmable controller and the tracking cable.

4.2 Mounting a Module

4.2.1 Mounting precautions

This section describes precautions for handling CPU modules, I/O modules, intelligent function modules, power supply modules, and base units.

- Do not drop or apply strong shock to the module case, memory card, SD memory card, extended SRAM cassette, terminal block connector, and pin connector.
- Do not remove the printed-circuit board of a module or extended SRAM cassette from the case. Doing so may cause failure of the module and/or printed-circuit board.
- Do not use module fixing screws on a base unit without mounting modules. Doing so may damage the base unit.
- Tighten the module fixing screws and terminal block screws within the specified torque range shown in the following table.

Screw	Tightening torque range
Module fixing screw (M3 × 12)*1	0.36 to 0.48N•m
I/O module terminal block screw (M3)	0.42 to 0.58N•m
I/O module terminal block fixing screw (M3.5)	0.66 to 0.89N•m
Power supply module terminal screw (M3.5)	0.66 to 0.89N•m

*1 Use screws (M2 × 12) with a spring washer (diameter: 5.5, thickness: 0.7) or a plain washer (diameter: 6, thickness: 0.5) (JIS B 1188 compliant screws).

- Be sure to install a power supply module in the power supply installation slot of Q3□B, Q3□SB, Q3□RB, Q3□DB, Q6□B, Q6□RB, Q6□WRB, QA1S6□B or QA6□B.
  Even if the power supply module is not installed, when the I/O modules and intelligent function module installed on the base units are of light load type, the modules may be operated.
  In this case, because a voltage becomes unstable, we cannot guarantee the operation.
- When using an extension cable or a tracking cable, keep it away from the main circuit cable (high voltage and large current).
  Keep a distance of 100mm or more from the main circuit.
- The following are precautions on use in combination with a module whose depth is 130mm or more (such as Q66DA-G).
  1) A module that is less than 130mm in depth cannot be mounted between modules that are 130mm or more in depth.
  2) A module that is less than 130mm in depth cannot be mounted on the right side of a module that is 130mm or more in depth.
  3) When the power supply module Q64P(N) is used and a module that is 130mm or more in depth is mounted in slot 0, it may be difficult to mount/remove a CPU module or insert/remove a memory card. Although there is no problem with the system operation, if it is inconvenient, mount a module that is less than 130mm in depth in slot 0 or leave the slot empty.

Point

In case of using the QA1S6□B, when installing the base unit to DIN rail in an environment of frequent vibration, use a vibration-proofing bracket (A1S-PLT-D). Mounting the vibration-proofing bracket (A1S-PLT-D) enhances the resistance to vibration.
Depending on the environment to install the base unit, it is also recommended to secure the base unit directly to the control panel.

4.2.2 Base unit installation

(1) Installing a base unit on a control panel

Install a main base unit, Q00JCPU, and Q00UJCPU (by screwing) in the following procedure.

1. **Fit the two base unit top installation screws into the enclosure.**



2. **Place the right-hand side notch of the base unit onto the right-hand side screw.**

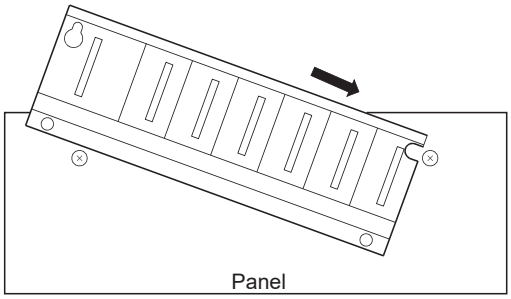

3. **Place the left-hand side pear-shaped hole onto the left-hand side screw.**

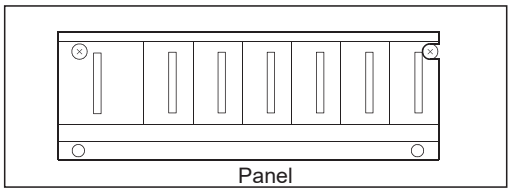

4. **Fit the installation screws into the holes at the bottom of the base unit, and then retighten all the installation screws.**

Point

- Install the main base unit, Q00JCPU, and Q00UJCPU on the panel while no module is mounted in the right-end slot on the base.
  When removing the base from the panel, remove the module mounted on the right-end slot first and then the base unit.
- The installation screws that provided with the slim type main base unit differ from those provided with other types of the base unit.
  For installation screws for the slim type main base unit, order "cross recessed head bind screw M4 x 12 (black)".

(2) Mounting a base unit on a DIN rail

Note the following when mounting a DIN rail.

Mounting a DIN rail needs special adaptors (optional), which are user-prepared.

(a) Applicable adaptor types

For Q38B, Q312B, Q68B, Q612B, Q38RB, Q68RB, Q65WRB, Q38DB, Q312DB : Q6DIN1

For Q35B, Q35DB, Q65B, Q00JCPU, Q00UJCPU : Q6DIN2

For Q33B, Q52B, Q55B, Q63B, Q32SB, Q33SB, Q35SB : Q6DIN3

DIN rail adaptor	Quantity of included parts				
	Adaptor(Large)	Adaptor(small)	Mounting screw (M5 × 10)	Square washer	Stopper
Q6DIN1	2	4	3	3	2
Q6DIN2	2	3	2	2	2
Q6DIN3	1	2	2	2	2

(b) Adaptor installation method

The following figures show how to attach DIN rail adaptors to the base unit.

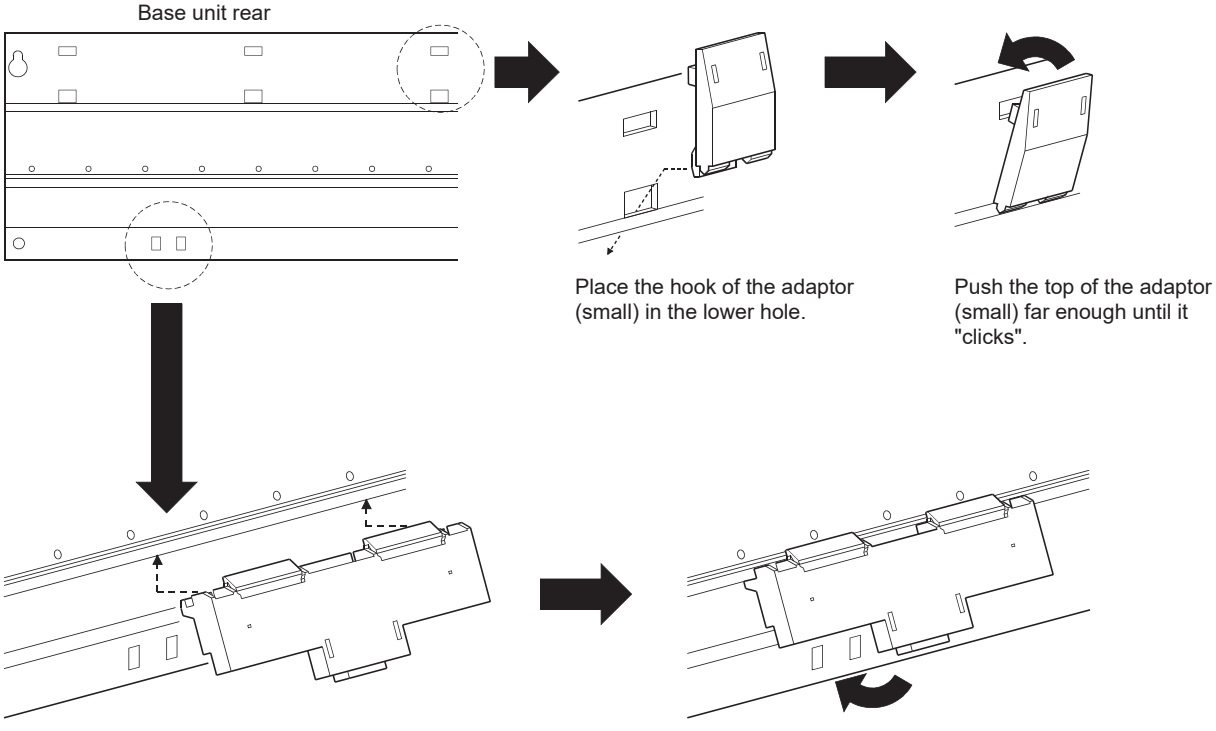

(c) Applicable DIN rail types (IEC 60715/JIS C 2812)

TH35-7.5Fe

TH35-7.5Al

TH35-15Fe

(d) Distance between DIN rail mounting screws

When using DIN rail, DIN rail mounting screws must be inserted in 200mm distances or less in order to ensure that the rail has sufficient strength.

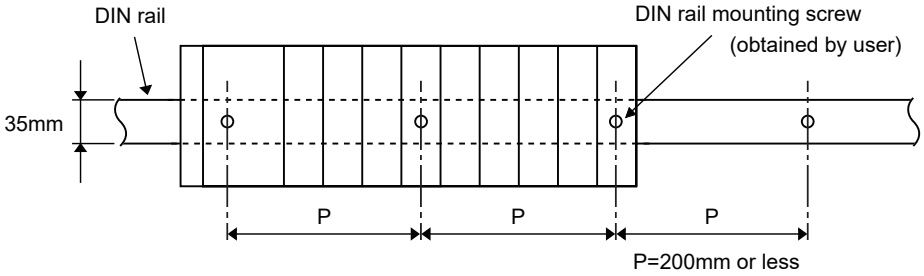

When installing the DIN rail in a frequent vibration and/or shock prone environment, insert the mounting screws in 200mm intervals or less by the following method show below.

- For Q38B, Q312B, Q68B, Q612B, Q38RB, Q68RB, Q65WRB, Q38DB or Q312DB type
  Screw the DIN rail in three places using the mounting screws and square washers included with the DIN rail adaptors (hereafter referred to as the adaptors) in 'Position A' (bottom of base unit).

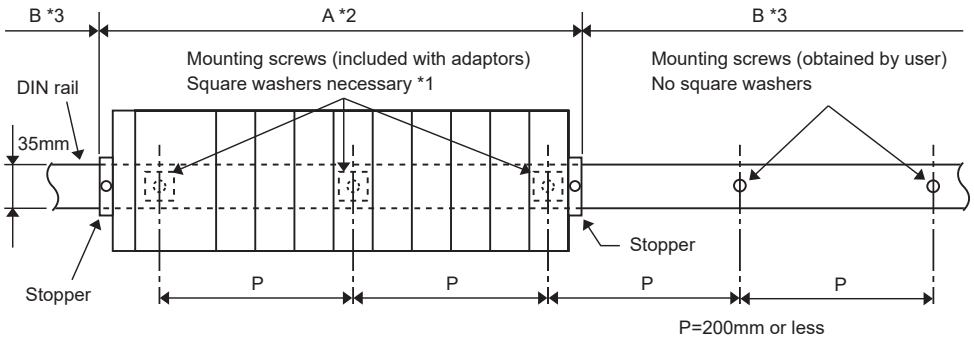

- For Q00JCPU, Q00UJCPU, Q33B, Q35B, Q35DB, Q65B, Q52B, Q55B, Q63B, Q32SB, Q33SB or Q35SB type

  Screw the DIN rail in two places using the mounting screws and square washers included with the adaptors in 'Position A' (bottom of base unit).

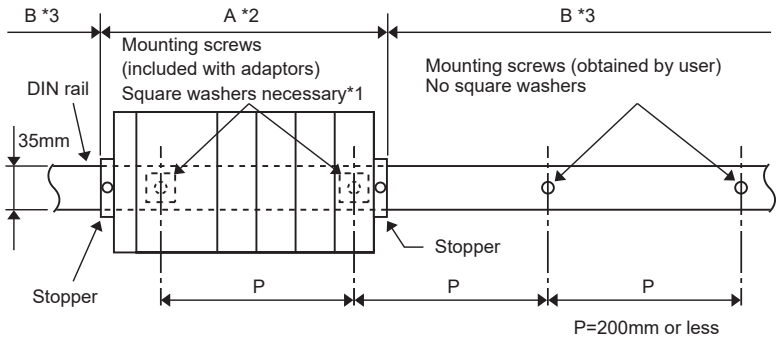

*1 The following shows where to position the square washers.

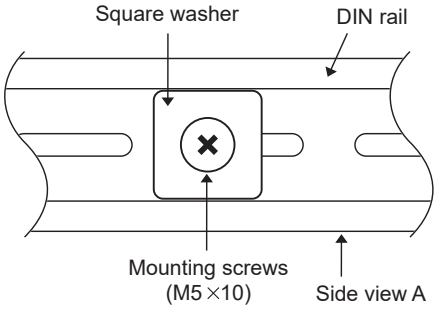

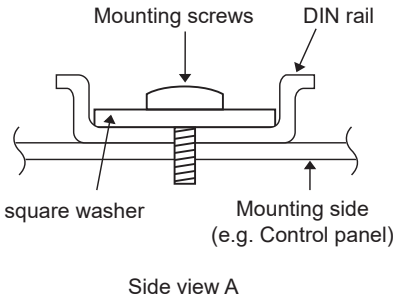

*2 Screw the DIN rail to a control panel using the mounting screws and square washers included with the adaptors in 'Position A' (bottom of base unit).

*3 Screw the DIN rail with mounting screws(obtained by user) in 'Position B' (Where the base unit is not installed). In this method the supplied mounting screws and square washers are not used.

Point

- Use only one washer for each mounting screw. Use only the square washers supplied with the adaptors. If two or more washers are used together for one mounting screw, the screw may interfere with the base unit.
- Make sure to align the square washer sides with the DIN rail.

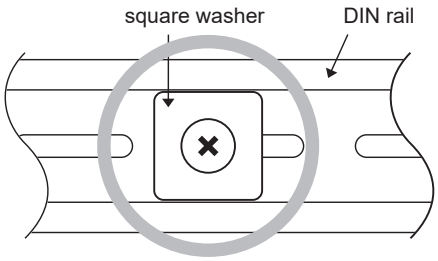

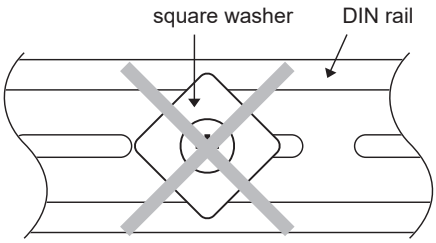

- Use the DIN rail that is compatible with M5 size screws.

(e) Stopper mounting

When using the DIN rail in the environment with frequent vibration, use stoppers included with the DIN rail adaptor shown in (a).

Point

An example of the use of the DIN rail stopper is described in the following procedure. Fix the module according to the manual of the DIN rail stopper used.

1) Loosen the screw at the top of the stopper. (2 stoppers)

2) Hitch the lower hook of the stopper to the bottom of the DIN rail. Install the stopper with the arrowhead side facing up.

3) Hitch the upper hook of the stopper to the top of the DIN rail.

4) Slide the stopper to the end of the base unit so that they are fully in contact. Pay attention when the DIN rail has been installed on the right side. The stopper needs to be attached upside down.

5) Press the stopper toward the opposite direction from the arrow incised on the stopper. Then tighten the screw with a screwdriver.
(Tightening torque 1.00 to 1.35N・m)

Make sure that the left and right stoppers are fixed securely to the DIN rail.

Complete

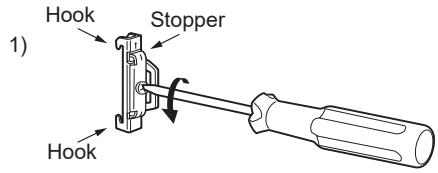

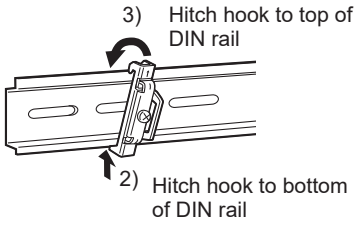

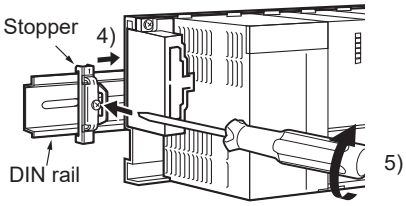

(Left side)

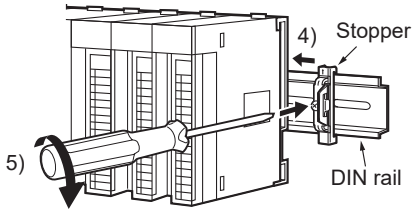

(Right side)

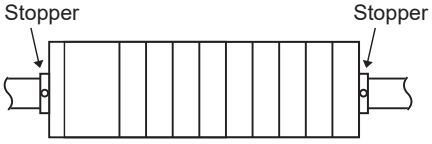

In addition, when three or more modules with 130mm or more in depth (such as Q66DA-G etc.) are mounted, or when the base unit is used in the environment with extremely frequent vibration, use the Q6DIN1A Q-type base DIN rail adaptor (vibration-proofing bracket kit) where the large mounting bracket is included. The large mounting bracket enables to enhance the resistance to vibration. Depending on the environment, it is recommended to mount the base unit directly on the control panel.

1) Q6DIN1A applicable models
   Q00JCPU, Q00UJCPU, Q33B, Q35B, Q38B, Q312B, Q32SB, Q33SB, Q35SB, Q38RB, Q35DB, Q38DB, Q312DB, Q52B, Q55B, Q63B, Q65B, Q68B, Q612B, Q68RB, Q65WRB

DIN rail adaptor (Vibration-proofing bracket kit)	Quantity of included parts							
	Adaptor (Large)	Adaptor (small)	Module mounting screw (M4 × 10)	Square washer	Stopper	Mounting bracket L	Mounting bracket R	Mounting screw (M5 × 10)
Q6DIN1A	2	4	4	3	2	1	1	3

Point

When stoppers are used, the dimension of stoppers need to be considered in the unit installation dimensions. For the base unit dimensions (W), refer to Page 247, Section 8.3.

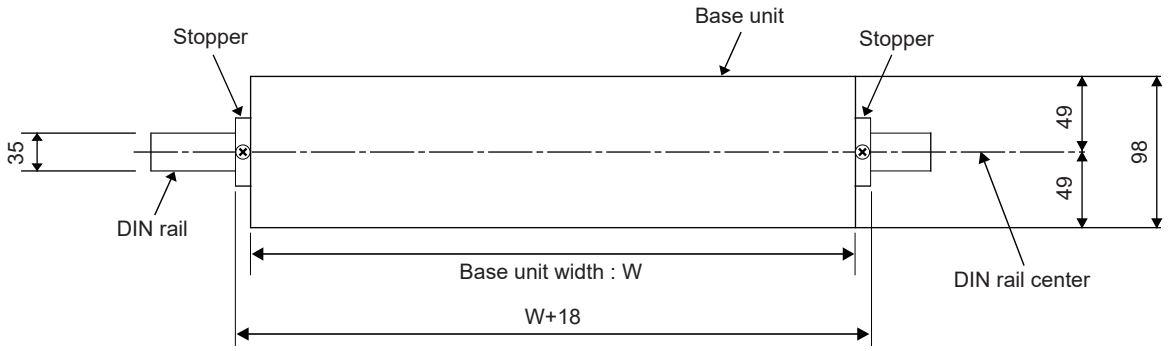

Unit: mm

(f) Dimensions when DIN rail is attached (Side view).

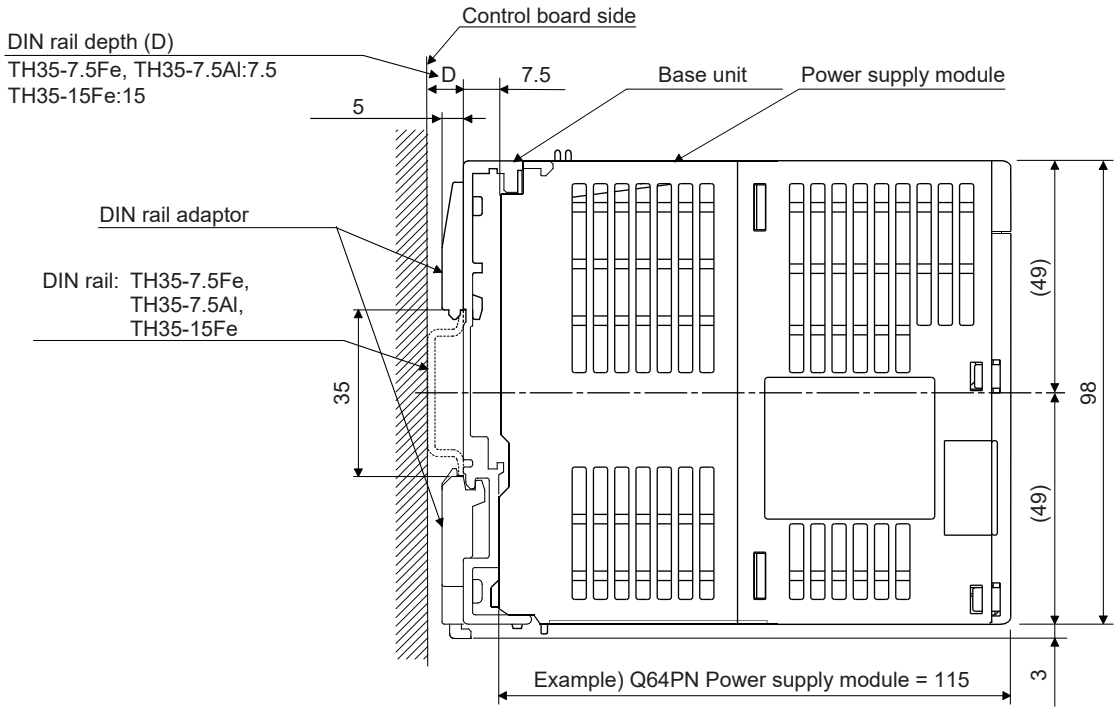

Unit: mm

4.2.3 Installation and removal of module

This section explains how to install and remove a power supply, CPU, I/O, intelligent function or another module to and from the base unit.

(1) Installation and removal of the module on/from Q3□B, Q3□SB, Q3□RB, Q3□DB, Q5□B, Q6□B, Q6□RB and Q6□WRB

(a) Installation of module on Q3□B, Q3□SB, Q3□RB, Q3□DB, Q5□B, Q6□B, Q6□RB and Q6□WRB

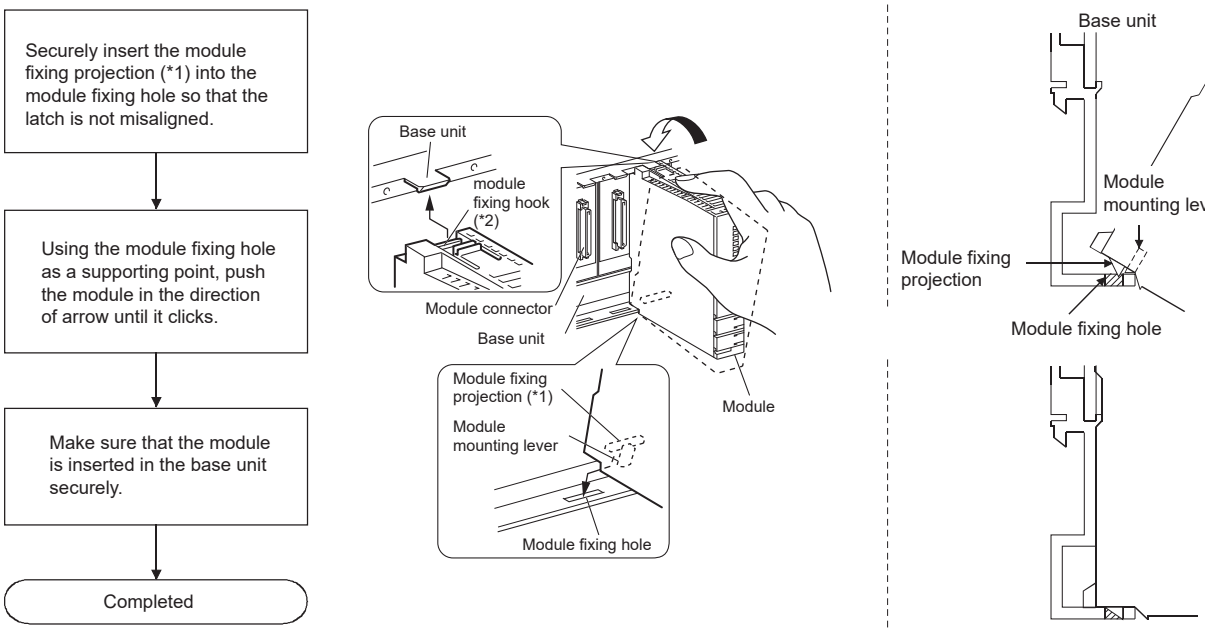

*1 If the module has two module fixing projections, insert the two module fixing projections on the right and left into the module fixing holes so that they are not misaligned.

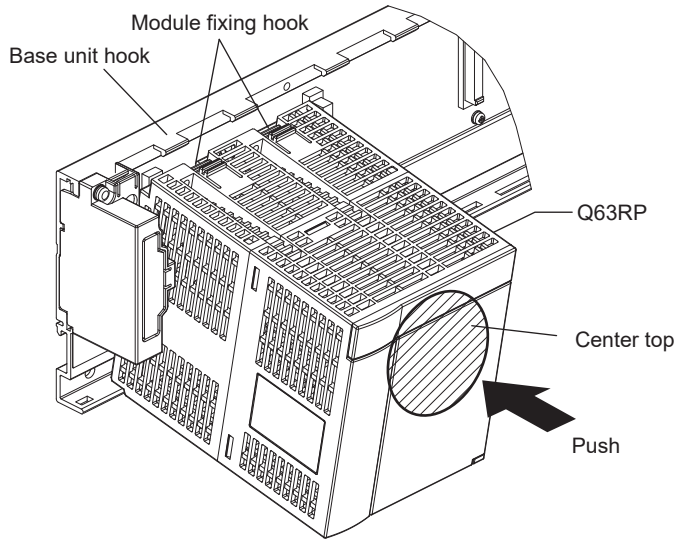

*2 If the module has two module fixing hooks on its top, push the center top of the module so that the two module fixing hooks on the right and left are securely engaged with the base unit hooks.

Point

- When mounting the module, always insert the module fixing projection into the module fixing hole of the base unit. At that time, securely insert the module fixing projection so that it does not come off from the module fixing hole. Failure to do so may damage the module connector and module.
- When using the programmable controller in an environment of frequent vibration or impact, secure the module to the base unit using screws.
  Module fixing screw : M3 × 12 (user-prepared)
- After first use of the product, do not perform the following operation more than 50 times (IEC 61131-2/JIS B 3502 compliant). Exceeding the limit may cause malfunction.
  - Mounting/removing the module to/from the base unit

(b) Removal of module from Q3□B, Q3□SB, Q3□RB, Q3□DB, Q5□B, Q6□B, Q6□RB, and Q6□WRB

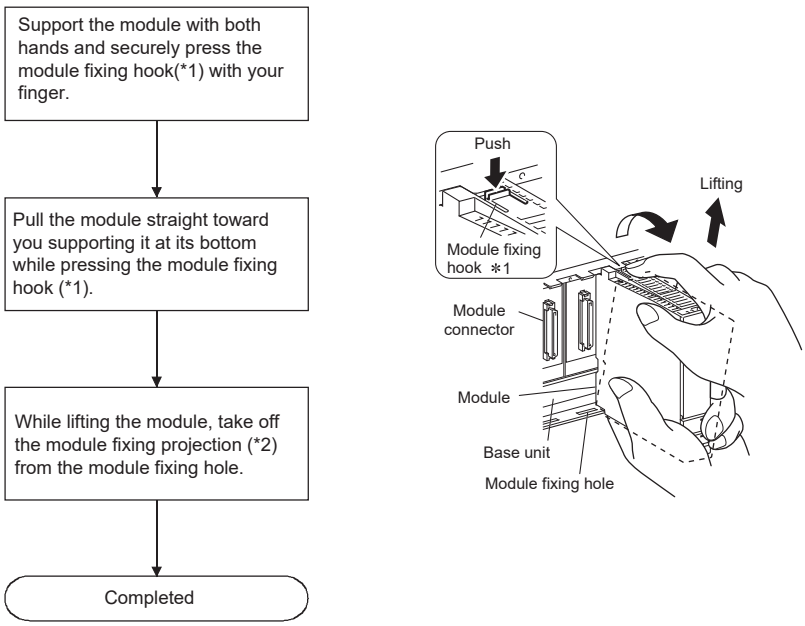

*1 If the module has two module fixing hooks on its top, push the two modules fixing hooks on the right and left of the module top simultaneously with your fingers until they stop.

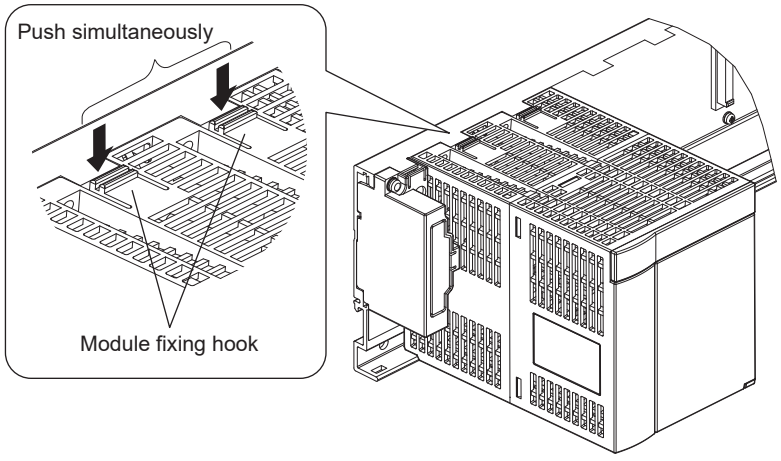

*2 If the module has two module fixing projections, remove the two module fixing projections on the right and left of the module bottom from the module fixing holes.

Point

- When removing the module which is secured by module fixing screw, remove the module fixing screw first and then module fixing projection off the module fixing hole of the base unit.
  Failure to do so may damage the module fixing projection.
- Please do not touch the module during turning on electricity and immediately after power supply interception. There is fear of a burn.

(2) Installation and removal of the module on/from QA1S5□B and QA1S6□B

(a) Installation of module on QA1S5□B and QA1S6□B

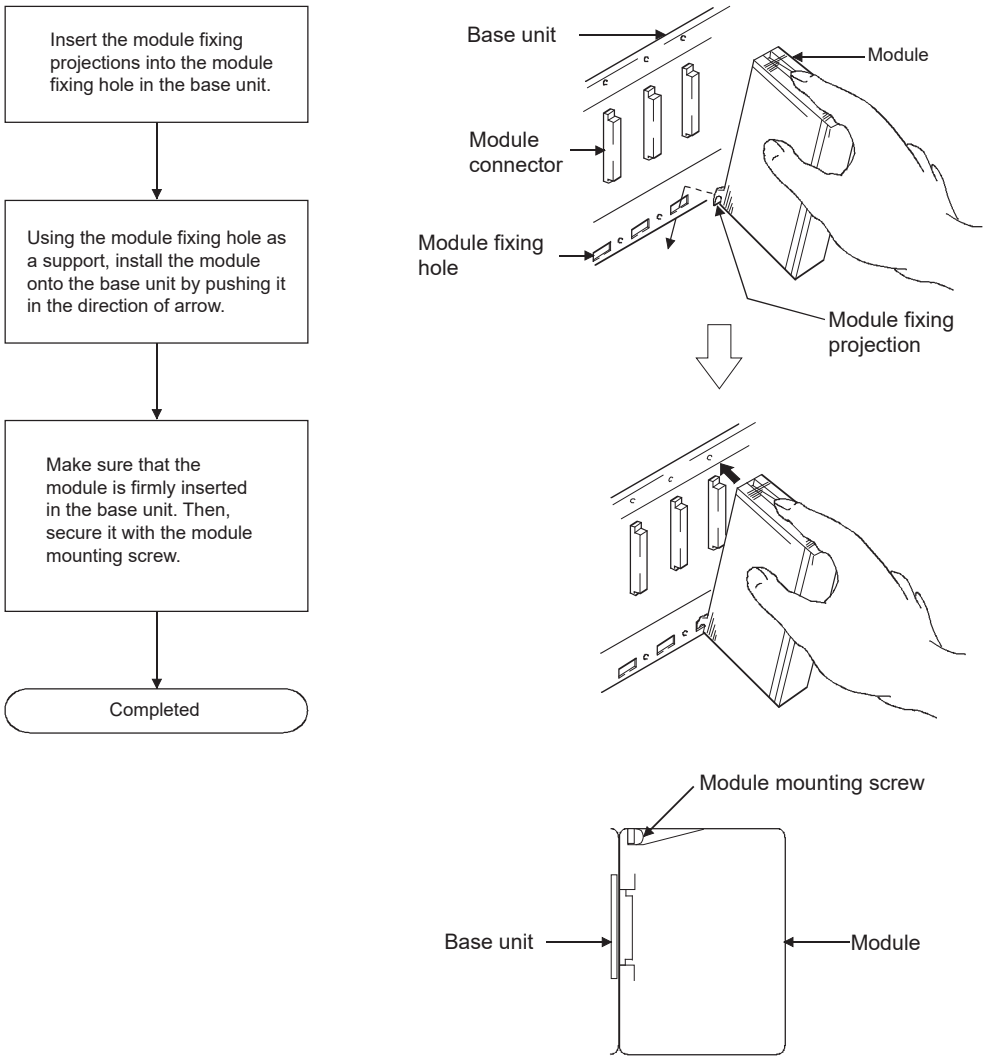

Point

- Make sure to mount the module with the module fixing projection inserted into the module fixing hole, using the module mounting screws.
  Failure to do so may damage the module connector and module.
- Attach a provided dustproof cover on the left side of the module that is to be mounted to the QA1S5□B. If not, foreign matter will get in the module and cause failure.

(b) Removal of module from QA1S5□B and QA1S6□B

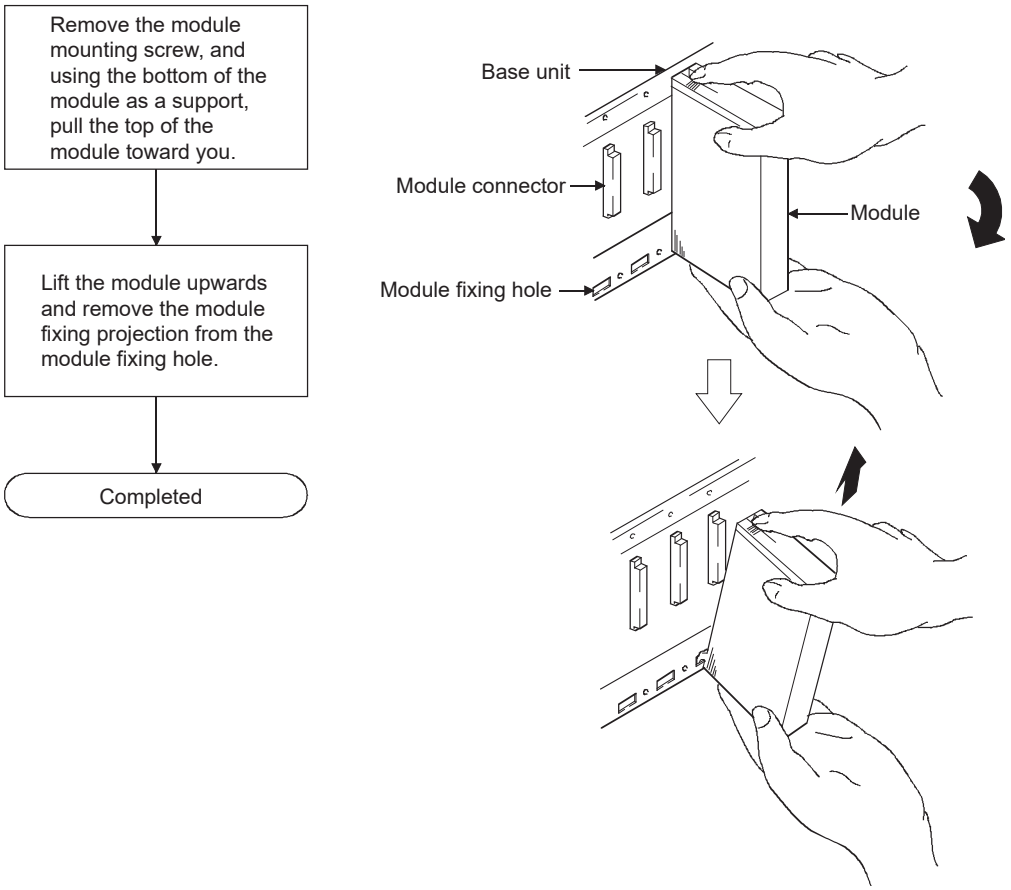

Point

When removing the module which is secured by module mounting screw, remove the module mounting screw first and then module fixing projection off the module fixing hole of the base unit.
Failure to do so may damage the module fixing projection.

(3) Installation and removal of on/from QA6□B

(a) Installation of module on QA6□B

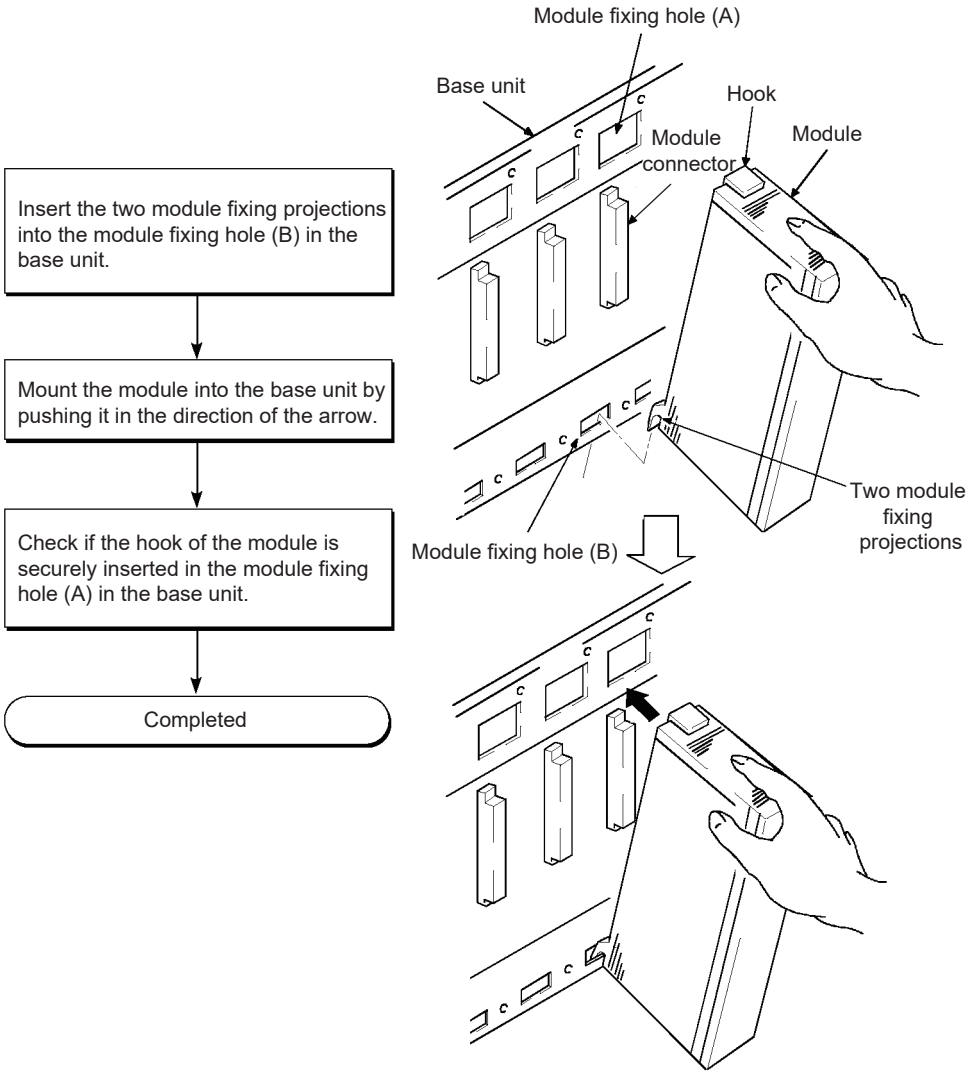

Point

For use in an environment with particularly frequent vibrations and/or shock, secure the module to the base with screws.
Module fixing screw: M4 × 0.7 × 12mm (User-prepared)

(b) Removal from QA6□B

Hold the module with both hands and press the hook on the top of module.

Pull the module straight toward you supporting it at its bottom while pressing the hook.

Lift the module upwards and remove the module fixing projection from the module fixing hole (B).

Completed

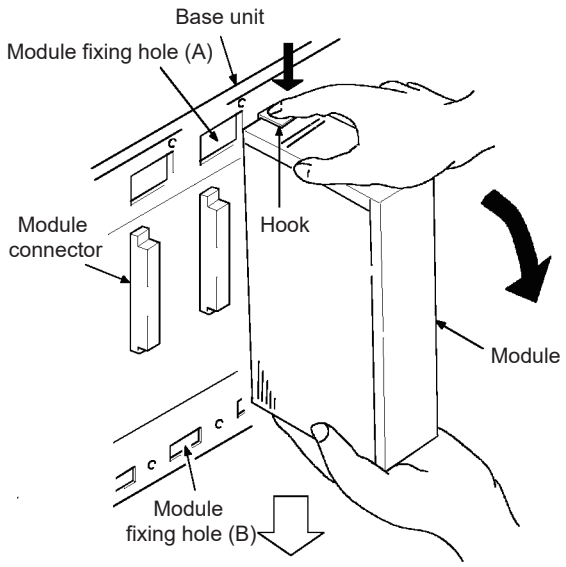

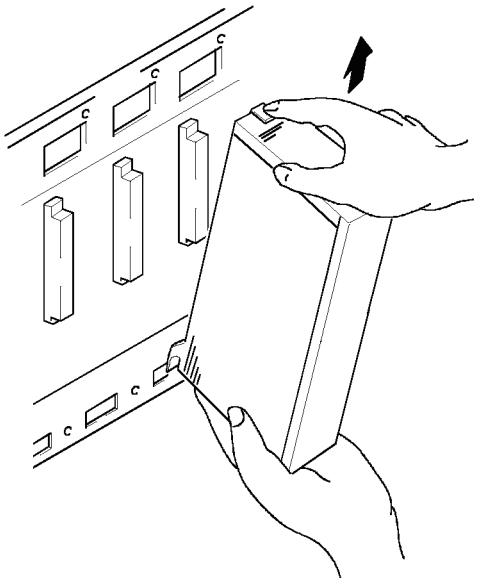

Point

Disengage the hook from the module fixing hole (A) and then remove the module fixing projection from the module fixing hole (B). Attempting to remove the module forcibly may damage the hook or module fixing projection.

4.3 Connecting an Extension Base Unit

When using two or more extension base units, the base number must be set with their base number setting connectors.*1

(The number of extension bases is set to 1 by factory default.)

*1 Since the Q6□WRB is fixed to the extension 1, extension base No. setting is not required.

4.3.1 Setting the extension base number

Set the extension base number in the following procedure.

1. **The base number setting connector of the extension base unit is located under the IN side base cover. First, loosen the upper and lower screws in the IN side base cover and remove the base cover from the extension base unit.**

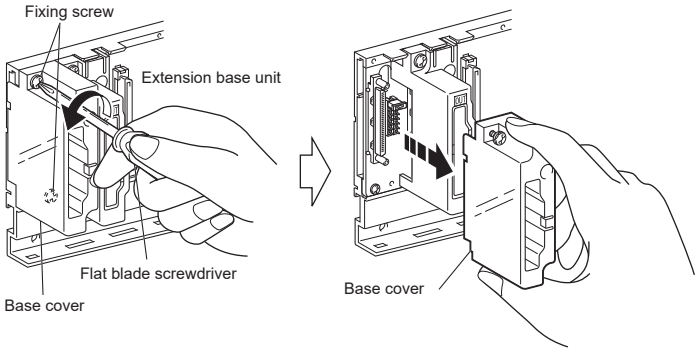

2. **Insert the connector pin in the required base number location of the connector (PIN1) existing between the IN and OUT sides of the extension cable connector.**

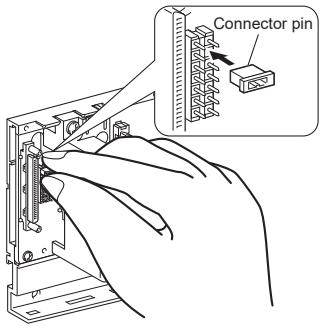

CPU module	Number setting for extension bases						
	Extension 1	Extension 2	Extension 3	Extension 4	Extension 5	Extension 6	Extension 7
							
Q12PRHCPU*2, Q25PRHCPU*2	Setting not available*3	Setting available*4					
Q00JCPU, Q00UJCPU	Setting available		Setting prohibited*1				
Q00CPU, Q01CPU, Q00UCPU, Q01UCPU, Q02UCPU	Setting available				Setting prohibited*1		
Modules other than above	Setting available						

*1 If these base numbers are set, "BASE LAY ERROR" (error code: 2010) occurs.

*2 The extension base unit can be connected only when the serial number (first five digits) of the Redundant CPU is "09012" or later and the redundant system is configured.
The extension base unit cannot be connected when the serial number (first five digits) of the Redundant CPU is "09011" or earlier.

*3 Connect the Q6□WRB to the first extension base. Since the Q6□WRB is fixed to the first extension base, base number setting is not required.

*4 The Q6□WRB cannot be connected to the second extension base or later bases. Use the Q6□RB for the second extension base or later bases.

3. **Install the base cover to the extension base unit and tighten the base cover screw. (Tightening torque: 0.36 to 0.48N•m)**

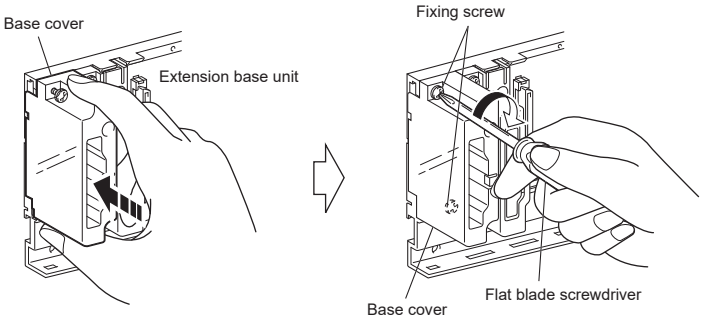

Point

- Set extension base numbers in the order of connection, starting from the extension base unit connected to the main base unit.
- Set correct extension base number for the base number setting connector. Do not set the same extension base number for two or more extension base units and do not skip extension base number setting. Doing so may cause incorrect input or incorrect output.

(1) Precautions for setting the extension base numbers

(a) Setting order

Set the extension base number consecutively.

In Auto mode, when any extension base number is skipped, no slots will be allocated to an empty extension base so that the slots cannot be reserved.

For details of the base mode, refer to the following.

Manuals for the CPU module used (Function Explanation, Program Fundamentals)

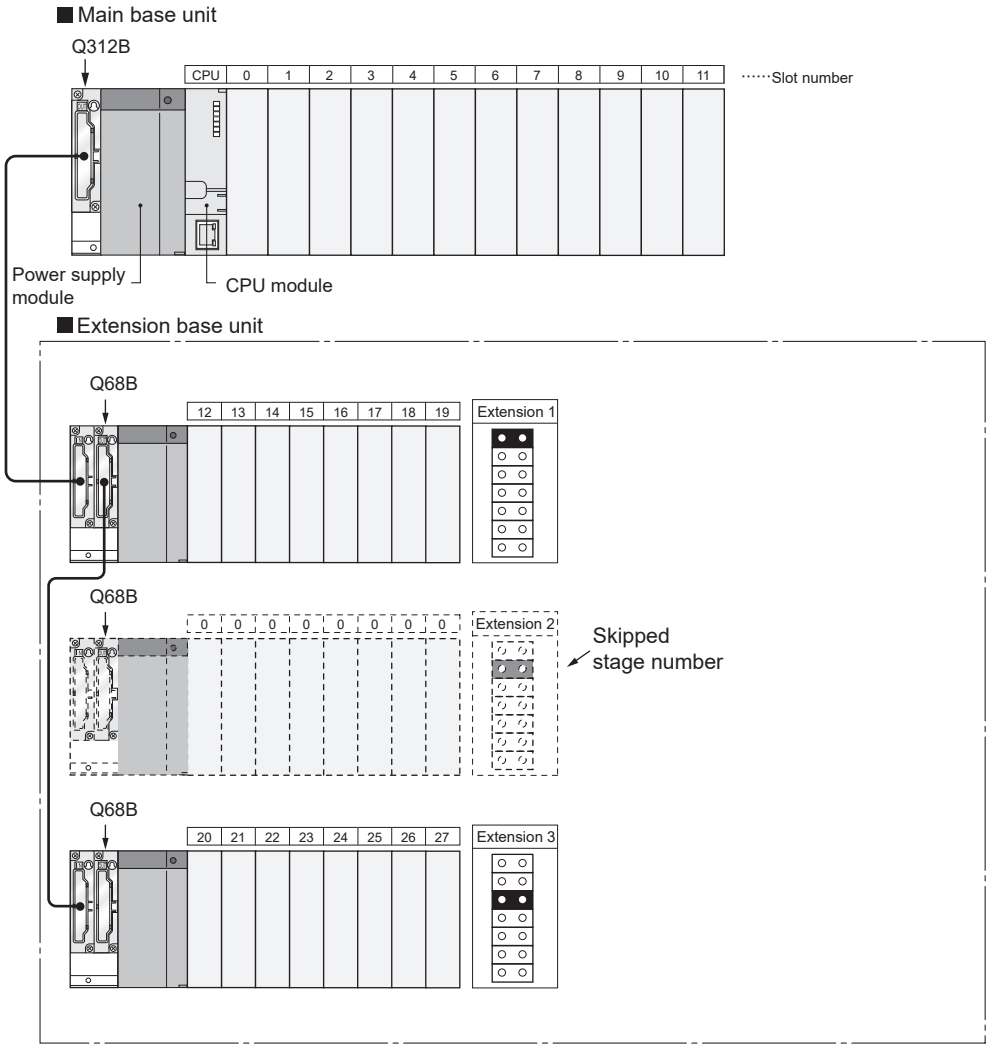

(b) When the same number is set

The same extension number cannot be set for multiple extension base unit.

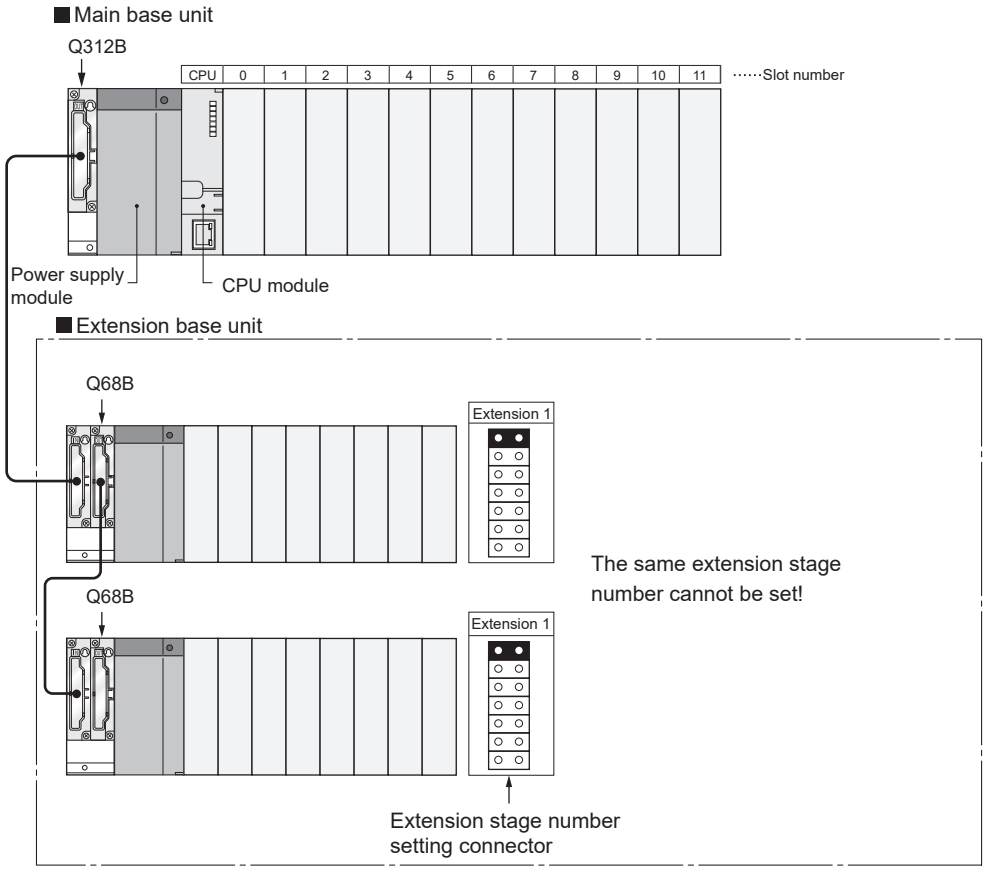

(c) When connector pins are connected in more than 2 positions, or no pin is used

The extension base unit cannot be used when connector pins for base number setting are inserted in more than two positions and when not using any connector pin.

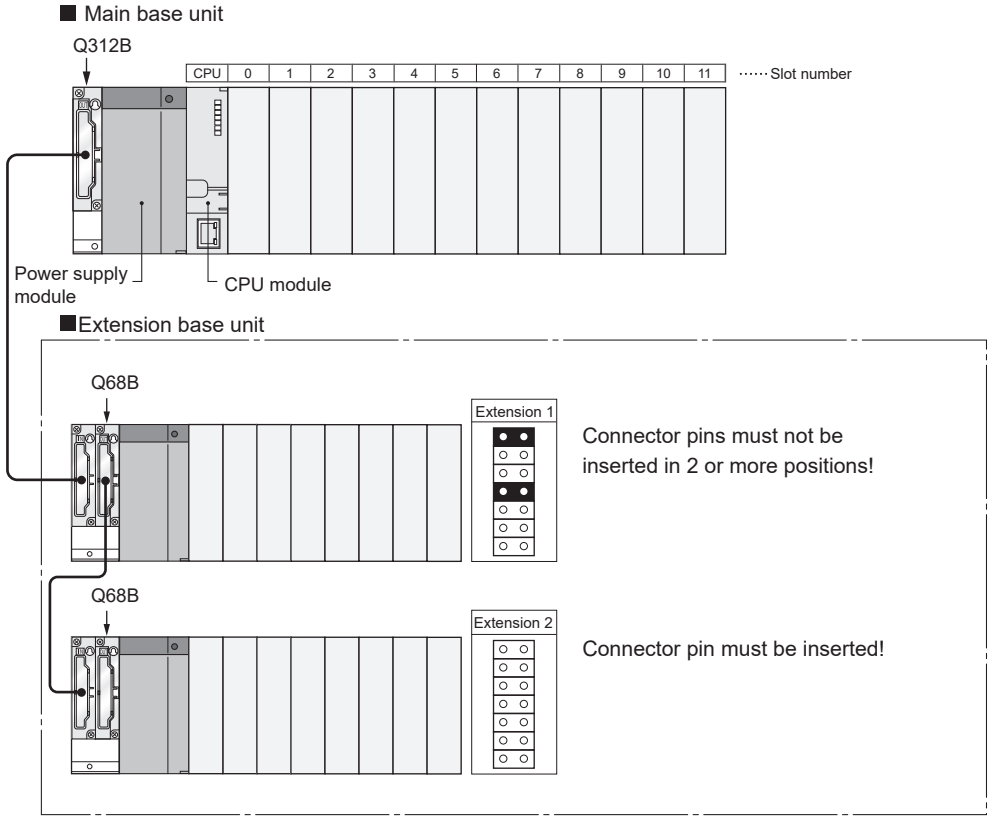

(d) Position of the AnS/A series-compatible extension base unit (QA1S6ADP+A1S5□B/A1S6□B) in the system

For precautions when using the QA1S6ADP+A1S5□B/A1S6□B in the system, refer to the following.

QA1S6ADP Q-AnS Base Unit Conversion Adapter User's Manual

QA1S6ADP-S1 Q-AnS Base Unit Conversion Adapter User's Manual

(e) Extension base positioning for AnS/A series-compatible extension base units (QA1S5☐B, QA1S6☐B, QA6☐B, and QA6ADP+A5☐B/A6☐B)

When using AnS/A series-compatible extension base units in combination, follow the instructions described below.

- Connect the units in order of Q5☐B/Q6☐B, QA1S5☐B/QA1S6☐B, QA6☐B, and QA6ADP+A5☐B/A6☐B from the nearest position of the main base unit.
- The QA1S6☐B and QA6ADP+A5☐B/A6☐B cannot be used in combination.
- The QA1S51B, which does not have an extension cable connector (OUT), cannot be used with the QA6☐B or QA6ADP+A5☐B/A6☐B.

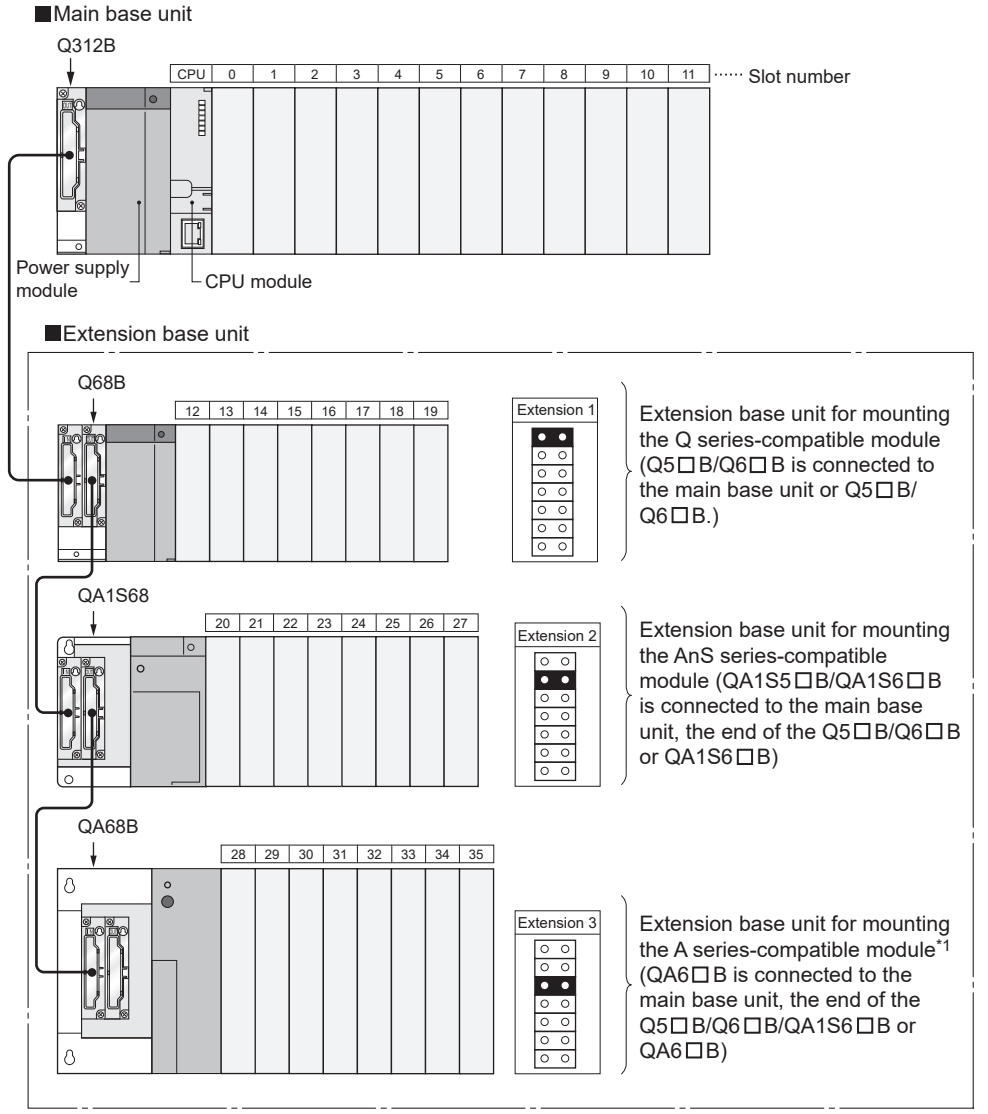

*1 When using the QA6ADP+A5☐B/A6☐B, connect it below the QA6☐B.

4.3.2 Connection and disconnection of extension cable

(1) Instructions for handling an extension cable

- Do not step on an extension cable.
- Connect the extension cable to the base unit with the base cover installed to the base unit.
  (After you have set the extension number to the extension base unit, reinstall and screw the base cover.)
- When laying an extension cable, secure 55mm or more as the minimum cable bending radius.
  If it is less than 55mm, a malfunction may occur due to characteristic deterioration, cable disconnection or the like.
- The overall length of extension cables must be up to 13.2m.
- Do not install extension cables with the main circuit (high voltage and large current) line.
- When connecting or disconnecting an extension cable, do not hold the ferrite cores mounted at both ends of the cable.
  Hold the connector part of the cable for connection or disconnection.

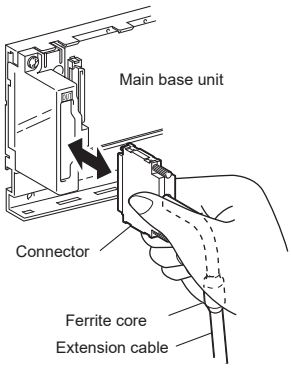

Holding the ferrite core may cause the cable disconnection in the connector.
Also, if the ferrite core position is shifted, the characteristic will change. When handling the cable, do not to shift the ferrite core position.

(2) Connection of extension cable

Point

When connecting an extension base unit to the main base unit with an extension cable, plug the OUT side connector of the main base unit and the IN side connector of the extension base unit with an extension cable. The system will not operate properly if the extension cable is connected in the form of IN to IN, OUT to OUT or IN to OUT.
When connecting two or more extension base units, plug the OUT side connector of the first extension base unit and the IN side connector of the second extension base unit with an extension cable.

1. To connect an extension cable to the main base unit, remove the portion under the OUT characters on the base cover with a tool such as a flat blade screwdriver (5.5 × 75, 6 × 100).
This also applies to a case where an extension cable is connected to the OUT side connector of the extension base unit. When connecting an extension cable to the Q00JCPU and Q00UJCPU, remove the base cover manually. To remove the base cover, insert the tip of a screwdriver into a clearance below the base cover and pry it up. Be careful not to damage the connector when inserting the screw driver since a connector is located inside the base cover.

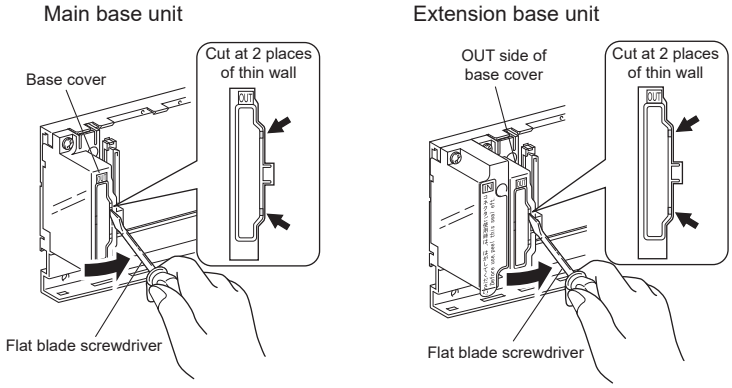

2. To connect the extension cable to the next extension base unit, remove the seal put under the IN characters on the base cover.

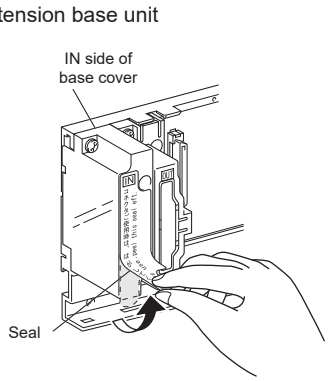

3. When plugging the extension cable to any base unit, hold the connector part of the extension cable.

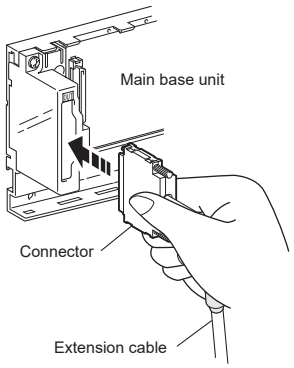

4. After fitting the extension cable, always tighten the extension cable connector fixing screws. (Tightening torque: 0.20N•m)

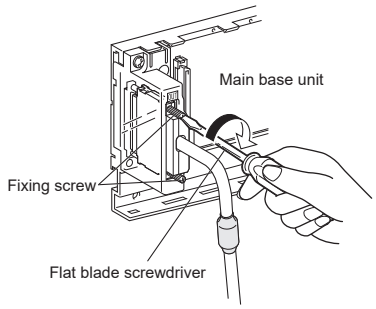

(3) Disconnection of extension cable

When disconnection the extension cable, hold and pull the connector part of the extension cable after confirming that the fixing screws have been completely removed.

4.3.3 Extension cable specifications

The extension cables are connected to transfer signals between a main base unit and an extension base unit or between extension base units.

Item	Type					
	QC05B	QC06B	QC12B	QC30B	QC50B	QC100B
Cable length	0.45m	0.6m	1.2m	3.0m	5.0m	10.0m
Conductor resistance value	0.044Ω	0.051Ω	0.082Ω	0.172Ω	0.273Ω	0.530Ω
Weight	0.15kg	0.16kg	0.22kg	0.40kg	0.60kg	1.11kg

Point

When the extension cables are used in combination, overall distance of the combined cable must be 13.2m or less.

4.3.4 Voltage drop when an extension base unit is used

Since the extension base unit (Q5□B or QA1S5□B) is supplied with 5VDC from the power supply module on the main base unit, a voltage drop occurs at extension cables. Improper I/O may occur if the specified voltage (4.75VDC or higher) is not supplied to the "IN" connector of the Q5□B or QA1S5□B.
When using the Q5□B or QA1S5□B, make sure that the "IN" connector of the Q5□B or QA1S5□B is supplied with 4.75VDC or higher.
And it is recommended to connect either of the extension base units as close as possible to the main base unit by using the short extension cable, so as to minimize the effects of voltage drop.

(1) When only the Q5□B or QA1S5□B is connected to the extension base unit

(a) Selection condition

4.75VDC or higher must be supplied to the "IN" connector of the Q5□B or QA1S5□B in the final extension base.

(b) How to calculate voltage to "IN" connector

The 5VDC output voltage of the power supply module on the main base unit is set to at least 4.90VDC. Therefore, the Q5□B or QA1S5□B can be used if the voltage drop at the extension cable is 0.15VDC or lower (4.9VDC - 4.75VDC = 0.15VDC).

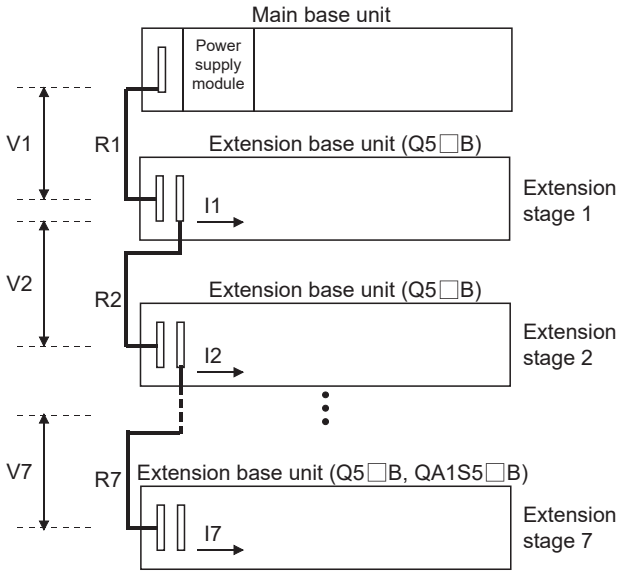

Extension cable type	Extension cable conductor resistance
QC05B	0.044Ω
QC06B	0.051Ω
QC12B	0.082Ω
QC30B	0.172Ω
QC50B	0.273Ω
QC100B	0.530Ω

Symbol	Description
V1	Voltage drop at the extension cable between the main base unit and extension base unit (Q5□B, QA1S5□B)
Vn	Voltage drop at the extension cable between the extension base unit (Q5□B, QA1S5□B) (extension stage n-1) and extension base unit (Q5□B, QA1S5□B) (extension stage n)
R1	Extension cable resistance between the main base unit and extension base unit (Q5□B, QA1S5□B)
Rn	Extension cable resistance between the extension base unit (Q5□B, QA1S5□B) (extension stage n-1) and extension base unit (Q5□B, QA1S5□B) (extension stage n)
I1 to I7	5VDC current consumption among extension base 1 to 7*1

*1 Sum total of currents consumed by Q5□B, QA1S5□B and currents consumed by the I/O modules, intelligent function modules mounted on the Q5□B, QA1S5□B. The symbols including "I" (I1 to I7) vary with the modules mounted on the Q5□B, QA1S5□B. For details of the symbol, refer to the user's manuals for the modules used.

Q5□B, QA1S5□B Installation position	Voltage drop at extension cable on corresponding extension unit							Sum total of voltage drops to "IN" connector of Q5□B or QA1S5□B (V)
	V1	V2	V3	V4	V5	V6	V7	
Extension 1	R1•I1	----	----	----	----	----	----	V=V1
Extension 2	R1 (I1+I2)	R2•I2	----	----	----	----	----	V= V1+V2
Extension 3	R1 (I1+I2+I3)	R2 (I2+I3)	R3•I3	----	----	----	----	V=V1+V2+V3
Extension 4	R1 (I1+I2+I3+I4)	R2 (I2+I3+I4)	R3 (I3+I4)	R4•I4	----	----	----	V=V1+V2+V3+V4
Extension 5	R1 (I1+I2+I3+I4+I5)	R2 (I2+I3+I4+I5)	R3 (I3+I4+I5)	R4 (I4+I5)	R5•I5	----	----	V=V1+V2+V3+V4+V5
Extension 6	R1 (I1+I2+I3+I4+I5+I6)	R2 (I2+I3+I4+I5+I6)	R3 (I3+I4+I5+I6)	R4 (I4+I5+I6)	R5 (I5+I6)	R6•I6	----	V=V1+V2+V3+V4+V5+V6
Extension 7	R1 (I1+I2+I3+I4+I5+I6+I7)	R2 (I2+I3+I4+I5+I6+I7)	R3 (I3+I4+I5+I6+I7)	R4 (I4+I5+I6+I7)	R5 (I5+I6+I7)	R6 (I6+I7)	R7•I7	V=V1+V2+V3+V4+V5+V6+V7

The voltage supplied to "IN" connector of the Q5□B or QA1S5□B in the final extension base reaches 4.75 VDC or higher on the condition that the sum total of voltage drop to "IN" connector of Q5□B or QA1S5□B (V) is 0.15V or lower.

(2) When the Q6□B or QA1S6□B is connected between the main base unit and the Q5□B or QA1S5□B

(a) Selection condition

4.75VDC or higher must be supplied to the "IN" connector of the Q5□B or QA1S5□B in the final extension base.

(b) How to calculate voltage to "IN" connector

The 5VDC output voltage of the power supply module on the main base unit is set to at least 4.90VDC. Therefore, the Q5□B or QA1S5□B can be used if the voltage drop at the extension cable is 0.15VDC or lower (4.9VDC - 4.75VDC = 0.15VDC).

[When the Q5□B or QA1S5□B is connected to Extension stage 2]

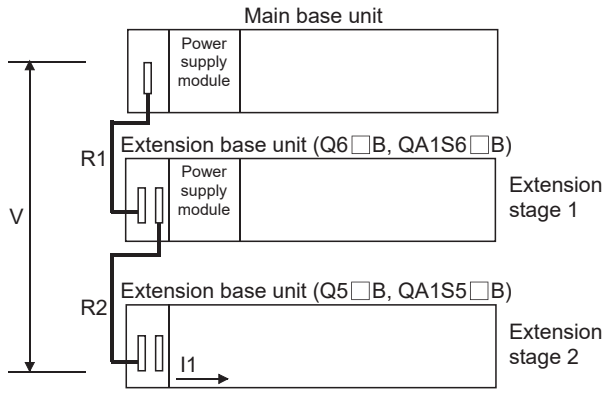

Extension cable type	Extension cable conductor resistance
QC05B	0.044Ω
QC06B	0.051Ω
QC12B	0.082Ω
QC30B	0.172Ω
QC50B	0.273Ω
QC100B	0.530Ω

Symbol	Description
V	Voltage drop at the extension cable between the main base unit and extension base unit (Q5□B, QA1S5□B)
In	5VDC current consumption when the extension base unit (Q5□B, QA1S5□B) is used as Extension stage n+1 n = 1 to 6, n: Extension number of extension base unit (Q6□B) connected (Sum total of currents consumed by Q5□B, QA1S5□B and currents consumed by the I/O modules, intelligent function modules mounted on the Q5□B, QA1S5□B.)
Rn	Extension cable resistance between the main base unit and the extension base unit (Q6□B, QA1S6□B) or the extension base unit (Q6□B, QA1S6□B) and the extension base unit (Q6□B, QA1S6□B)
R_{n+1}	Extension cable resistance between the extension base unit (Q6□B, QA1S6□B) and extension base unit (Q5□B, QA1S5□B)

Position of extension base unit		Voltage drop caused by extension cable from the main base unit to IN connector of the Q5□B or QA1S5□B (V)
Q6□B, QA1S6□B	Q5□B, QA1S5□B	
Extension1	Extension 2	V=(R1+R2)I1
Extension 1, Extension 2	Extension 3	V=(R1+R2+R3)I2
Extension 1 to 3	Extension 4	V=(R1+R2+R3+R4)I3
Extension 1 to 4	Extension 5	V=(R1+R2+R3+R4+R5)I4
Extension 1 to 5	Extension 6	V=(R1+R2+R3+R4+R5+R6)I5
Extension 1 to 6	Extension 7	V=(R1+R2+R3+R4+R5+R6+R7)I6

The voltage supplied to the "IN" connector of the Q5□B or QA1S5□B reaches 4.75 VDC or higher on the condition that the voltage drop (V) at the extension cable between the main base unit and Q5□B or QA1S5□B is 0.15 VDC or lower.

(3) When the GOT is bus-connected

(a) Selection condition

4.75VDC or higher should be supplied to the "IN" connector of the Q5□B in the final extension.

(b) How to calculate voltage to "IN" connector

The 5VDC output voltage of the power supply module on the main base unit is set to at least 4.90VDC.
Therefore, the Q5□B can be used if the voltage drop is 0.15VDC or lower (4.9VDC -4.75VDC = 0.15VDC).

Extension cable type	Extension cable conductor resistance
QC05B	0.044Ω
QC06B	0.051Ω
QC12B	0.082Ω
QC30B	0.172Ω
QC50B	0.273Ω
QC100B	0.530Ω

[When the Q5□B is connected to Extension stage 2.]

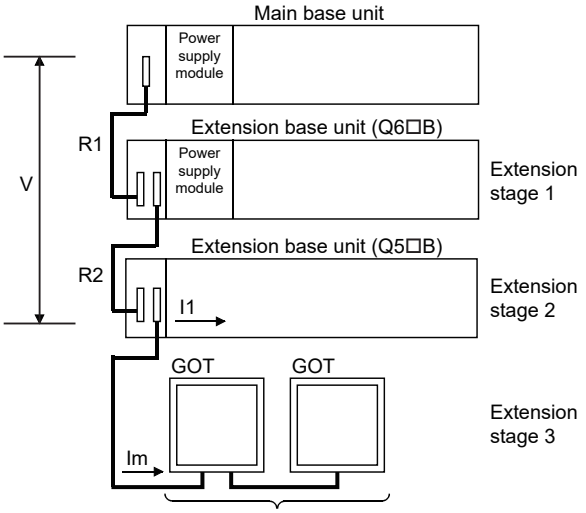

Number of connectable GOTs: up to 5

Symbol	Description
V	Voltage drop at the extension cable between the main base unit and extension base unit (Q5□B)
In	5VDC current consumption when the extension base unit (Q5□B) is used as Extension n+1, n = 1 to 5, n: Extension number of the extension base unit (Q6□B) connected (Sum total of current consumed by Q5□B and currents consumed by I/O, intelligent function modules loaded on the Q5□B)
Im	5VDC current consumption of the GOT (current consumption per GOT is 255mA) • Im = 255 × c (c: Number of GOTs connected (c: 1 to 5))
Rn	Extension cable resistance between the main base unit and extension base unit (Q6□B) or the extension base unit (Q6□B) and extension base unit (Q6□B)
R_{n+1}	Extension cable resistance between the extension base unit (Q6□B) and extension base unit (Q5□B)

Position of extension base unit		Number of bases for GOT bus connection	Voltage drop caused by extension cable from the main base unit to the Q5□B IN connector (V)
Q6□B	Q5□B		
Extension 1	Extension 2	Extension 3	V=(R1+R2)(I1+Im)
Extension 1, Extension 2	Extension 3	Extension 4	V=(R1+R2+R3)(I2+Im)
Extension 1 to 3	Extension 4	Extension 5	V=(R1+R2+R3+R4)(I3+Im)
Extension 1 to 4	Extension 5	Extension 6	V=(R1+R2+R3+R4+R5)(I4+Im)
Extension 1 to 5	Extension 6	Extension 7	V=(R1+R2+R3+R4+R5+R6)(I5+Im)

The voltage supplied to the "IN" connector of the Q5□B reaches 4.75 VDC or higher on the condition that the voltage drop (V) at the extension cable between the main base unit and Q5□B is 0.15 VDC or lower.

Point

When connecting GOT by extension cable that is 13.2m or longer, the bus extension connector box A9GT-QCNB is required.
Since the A9GT-QCNB is supplied with 5VDC from the power supply module loaded on the main base unit, 30mA must be added to "Im" as the current consumption of the A9GT-QCNB.
For details of the method for GOT bus connection, refer to the following.

GOT-A900 Series User's Manual (Connection)
GOT1000 Series Connection Manual (Mitsubishi Electric Products) for GT Works3
GOT2000 Series Connection Manual (Mitsubishi Electric Products) For GT Works3 Version1

4.4 Mounting and Removing a Terminal Block

This section describes a procedure for mounting and removing an 18-point terminal block.

(1) Removal procedure

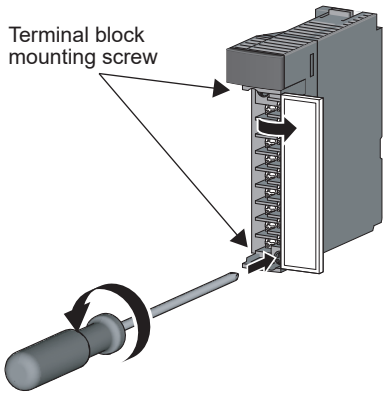

1. **Open the terminal cover and loosen the terminal block mounting screw.**

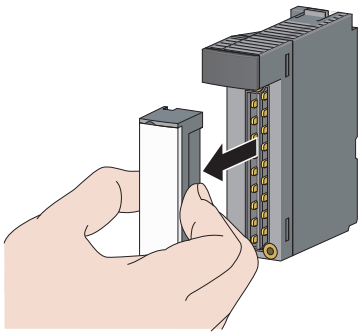

2. **Remove the terminal block.**

(2) Mounting procedure

Place the terminal block in position, and then tighten the two terminal block mounting screws (upper and lower).

Point

For mounting and removal of other terminal blocks, refer to the user's manual for the module used.

4.5 Installing and Removing a Memory Card

This section describes a procedure for installing and removing a memory card. Note 4.1

(1) For Q2MEM type memory cards

(a) Installing a memory card

Pay attention to the direction of a memory card.

Insert the card securely into the connector of a CPU module until the height of the card reaches that of the memory card EJECT button.

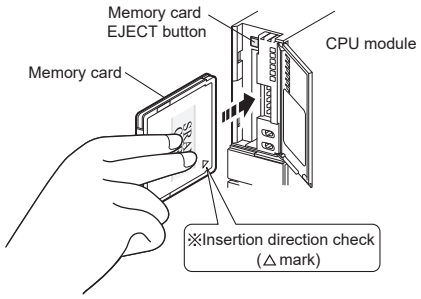

(b) Removing a memory card

Press the memory card EJECT button and pull out the memory card.

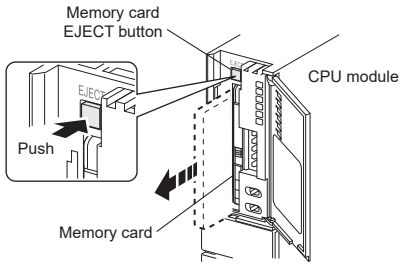

Note 4.1 Basic Universal

The Basic model QCPU, Q00U(J)CPU, Q01UCPU, QnUDVCPU, and QnUDPVCPU do not support the use of a memory card.

(2) For Q3MEM type memory cards

(a) Installing a memory card

Pay attention to the direction of a memory card and install the card according to the following procedure.

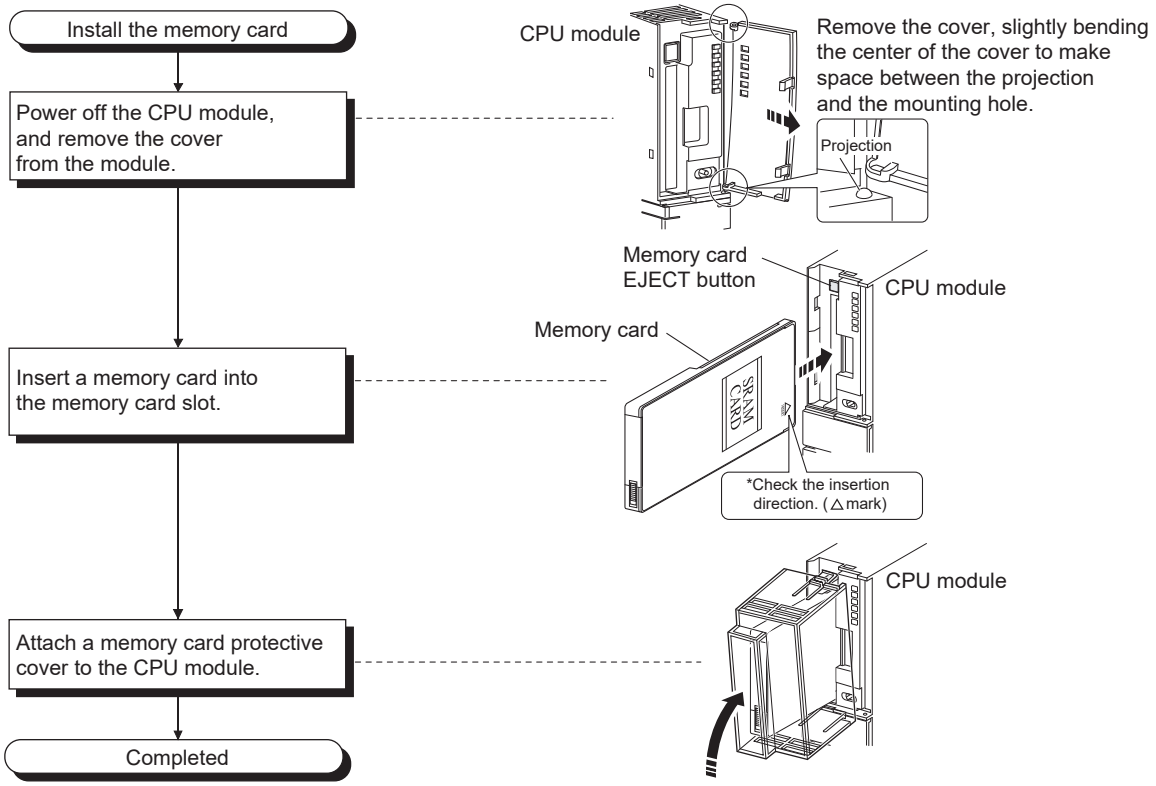

(b) Removing a memory card

When removing a memory card from the CPU module, remove a memory card protective cover and press the EJECT button to pull out the memory card.

Remove a memory card protective cover, press the memory card EJECT button, and pull out the memory card.

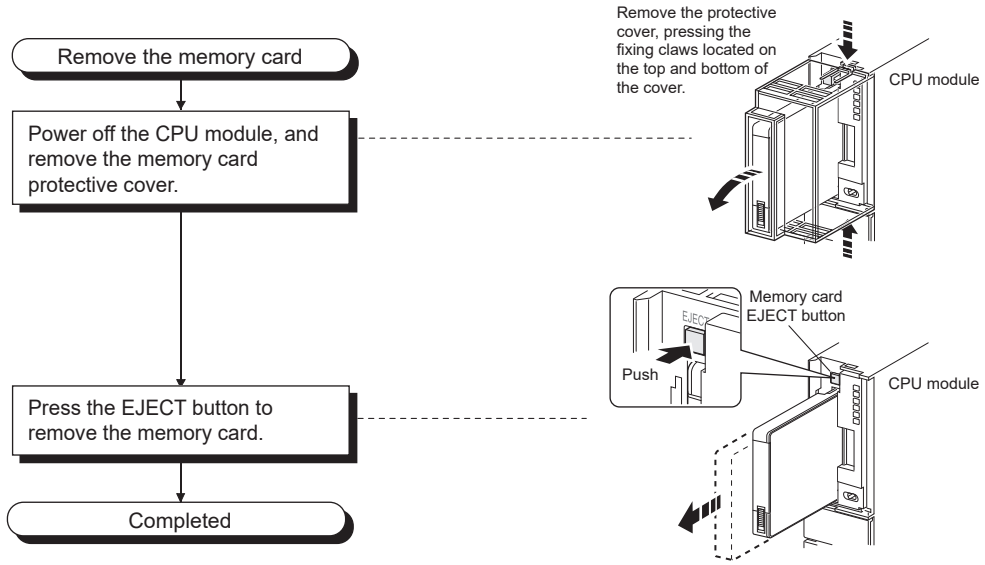

(3) Removing a memory card during power-on

Check that the corresponding special relay areas (SM604 and SM605) are off.

- The memory card cannot be removed while "SM604" is on because the CPU module is using the card.
- Turn off "SM605" if it is on.

When both "SM604" and "SM605" are off, remove the memory card according to the following procedure.

1. **Turn on the special relay "SM609" using the sequence program or by the device test of a programming tool.**
2. **By monitoring the programming tool, check that the special relay "SM600" is turned off.**
3. **Remove the memory card.**

SM600 (Memory card usable flag)	:	The system turns on this flag when a memory card is ready to be used.
SM604 (Memory card in-use flag)	:	The system turns on this flag when a memory card is being used.
SM605 (Memory card remove/insert prohibit flag)	:	The user turns on this flag to disable insertion/removal of a memory card.

(4) Installing a memory card during power-on

1. **Install a memory card.**
2. **Check that the special relay "SM600" is on by monitoring the programming tool.**

Point

Observe the following precautions when installing or removing a memory card while power is on.

- Note that the data in a memory card may be damaged if the above procedure is not followed. If the operating status of the CPU module at the time of an error is set to "Stop" in parameter, the CPU module stops its operation upon the occurrence of "ICM.OPE.ERROR".
- When a memory card is installed, the scan time of the CPU module increases by several 10ms (maximum). The scan time increases for only one scan where the CPU module performs the mount processing.
- Poor insertion of the memory card may result in "ICM.OPE.ERROR".

4.6 Installing and Removing an SD Memory Card

This section describes a procedure for installing and removing an SD memory card. Note 4.2

(1) Installing an SD memory card

Pay attention to the direction of an SD memory card and install the card according to the following procedure.

1. **Insert an SD memory card straight into the SD memory card slot.**
   The notch part of the SD memory card must be on the lower side.
   After installing the SD memory card, check that it is inserted completely. Poor contact may cause malfunction.

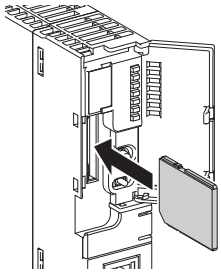

2. **The SD CARD LED starts flashing, and turns on when the card is ready to be used.**
3. **Check that the SD CARD LED remains on.**

Point

If the SD CARD LED does not turn on even after an SD memory card is installed, check that SM606 (SD memory card forced disable instruction) and SM607 (SD memory card forced disable status flag) are off.

Note 4.2 Basic High performance Process Redundant Universal

The Basic model QCPU, High Performance model QCPU, Process CPU, and Redundant CPU do not support the use of SD memory cards. For the Universal model QCPU, only the QnUDVCPU and QnUDPVCPU support the use of SD memory cards.

(2) Removing an SD memory card

Pull out the SD memory card according to the following procedure.

1. **Disable the access to the SD memory card in either of the following. The SD CARD LED flashes during the access-disabling processing, and turns off when the processing is completed.**

- Press the SD memory card lock switch on the CPU module for over one second.
- Turn on SM609 (Memory card remove/insert enable flag).

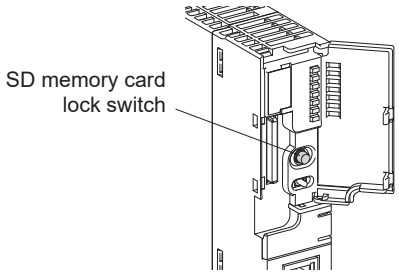

When removing the SD memory card while the power is on, check that the SD CARD LED is off.

2. **Push the SD memory card once, and pull out the card straight.**

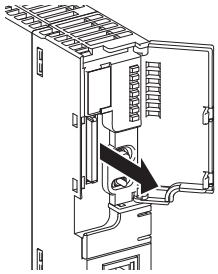

Point

- Do not remove the SD memory card while any function using the card is being executed.
- When the SD card installation/removal is prohibited or the card is being used, the SD CARD LED does not turn off. Check the following items to check that the SD card installation/removal is prohibited or the card is being used.
  - SM605 (Memory card remove/insert prohibit flag) is off.
  - All points in SD604 (Memory card use conditions) are off.
    SD604 (Memory card use conditions) turns off when the file in the SD memory card is not used. When SD604 does not turn off, use SM606 (SD memory card forced disable instruction) and SM607 (SD memory card forced disable status flag) to forcibly disable the use of the SD memory card.
    (☞ Page 261, Section 10.4)

4.7 Installing and Removing an Extended SRAM Cassette

This section describes a procedure for installing and removing an extended SRAM cassette. Note 4.3

(1) Installing an extended SRAM cassette

Insert an extended SRAM cassette while the power is off.

1. **Open the cassette cover on the side of the CPU module.**

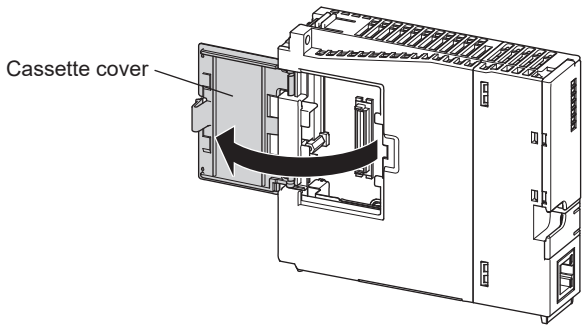

2. **Hold the top and the bottom of the knob of the extended SRAM cassette, and insert it straight into the cassette connector.**

The notch part of the extended SRAM cassette must be on the right side.
After installing the cassette, check that it is inserted completely.

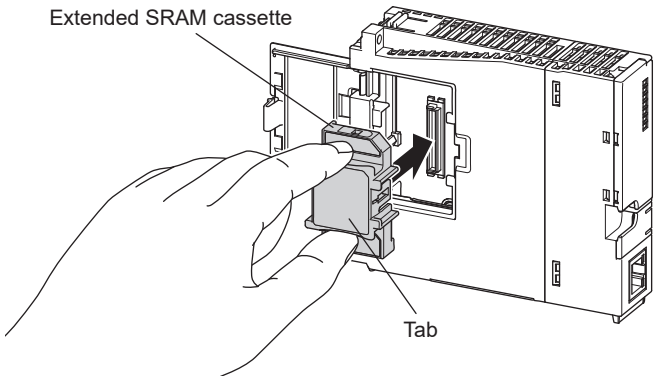

3. **Close the cassette cover.**

Note 4.3 Basic High performance Process Redundant Universal

The Basic model QCPU, High Performance model QCPU, Process CPU, and Redundant CPU do not support the use of extended SRAM cassettes. For the Universal model QCPU, only the QnUDVCPU and QnUDPVCPU support the use of extended SRAM cassettes.

Point

- The data stored in the standard RAM before an extended SRAM cassette is installed are retained even after the cassette is installed.
- The capacity of the standard RAM after installation can be checked on the "Online Data Operation" window.

  [Online] ⇨ [Read from PLC]

(2) Removing an extended SRAM cassette

Remove an extended SRAM cassette while the power is off.

1. **Read the data stored in the standard RAM (including the extended SRAM cassette) using GX Works2 in advance.**
   Removing the extended SRAM cassette deletes all the data stored in the standard RAM (including the cassette).
2. **Turn off the power supply of the CPU module.**
3. **Remove the CPU module from the base unit.**
4. **Open the cassette cover on the side of the CPU module.**
5. **Hold the top and the bottom of the tab of the extended SRAM cassette, and pull it out straight from the connector.**
6. **Close the cassette cover.**

4.8 Wiring

4.8.1 Wiring power supplies

(1) Precautions for wiring power supplies

- Wire cables of the programmable controller power supply, I/O power supply, and motor power supply separately as shown below.

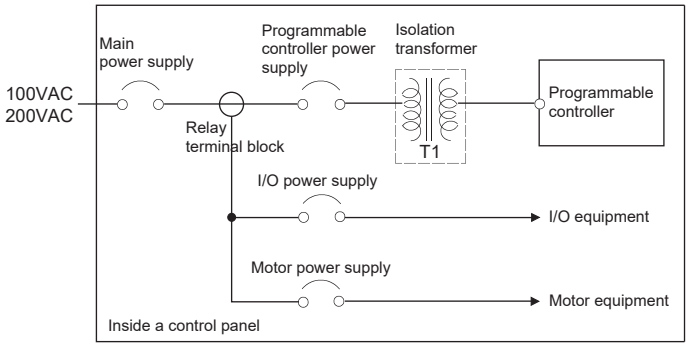

- If there is much noise, such as lightning surge, connect an isolation transformer.
  For details on the isolation transformer, refer to the following.
  ☞ Page 673, Appendix 8.1
- Make sure to connect a breaker or an external fuse between the power supply and the power input terminals (L and N) of this product so that the power can be shut off at the power input side of this product. Without a breaker or an external fuse, a large current keeps flowing if the product fails, causing a smoke and fire. (When the programmable controller is used alone, connecting a breaker around 10A or an external fuse is recommended.)
- Do not connect the 24VDC outputs of two or more power supply modules in parallel to supply power to one I/O module. Parallel connection will damage the power supply modules.

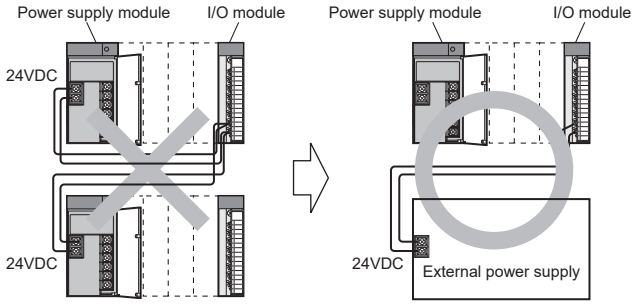

- 100VAC, 200VAC and 24VDC wires must be twisted as dense as possible.
  Connect the modules with the shortest distance.
  Also, to reduce the voltage drop to the minimum, use the thickest wires possible (maximum 2mm^2).
- Do not bundle the 100VAC and 24VDC wires with, or run them close to, the main circuit (high voltage, large current) and I/O signal lines (including common line). Reserve a distance of at least 100mm from adjacent wires.

- Momentary power failure may be detected or the CPU module may be reset due to serge caused by lightning.
  As a measure against the lightning surge noise, connect a low-voltage surge protective device (SPD) as shown below.
  Using the low-voltage surge protective device can reduce the influence from the lightning.

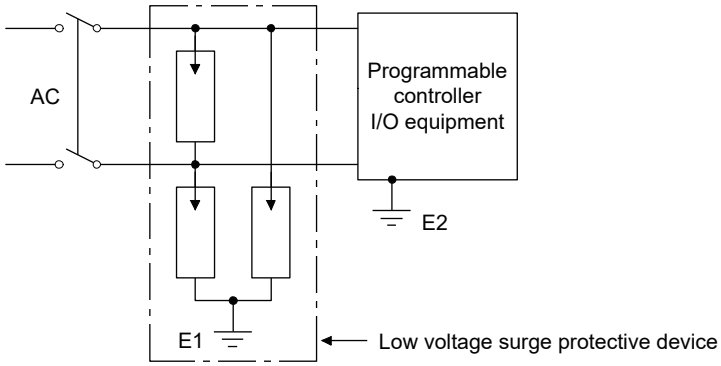

- Use an online UPS (uninterruptible power supply) with power distortion factor of 5% or less or line-interactive UPS. For a standby system UPS, use Mitsubishi small-capacity UPS "FREQUPS FW-F series" (hereafter abbreviated as FW-F series).*1 (Example: FWF10-0.3K/0.5K)
  Do not use any standby system UPS other than the FW-F series.

*1 Use a FW-F series UPS with the serial number starts with P or later or ends with HE.

SERIAL : Q00000000
Starts with "P" or later

SERIAL : B00000000 HE
Ends with "HE"

Point

- Separate the ground of the low-voltage surge protective device (E1) from that of a programmable controller (E2).
- Select a low-voltage surge protective device so that the power supply voltage of when line voltage is maximum does not exceed the maximum allowable circuit voltage of the surge absorber.
- Select a low-voltage surge protective device for power supply that complies with IEC 61643-11/JIS C5381-11 and meets the requirements of the test class "Class Unit Ⅱ".

(2) Wiring examples

The following figures show wiring examples of cables such as power cables and ground wires to the main base unit and extension base units.

(a) Single power supply system

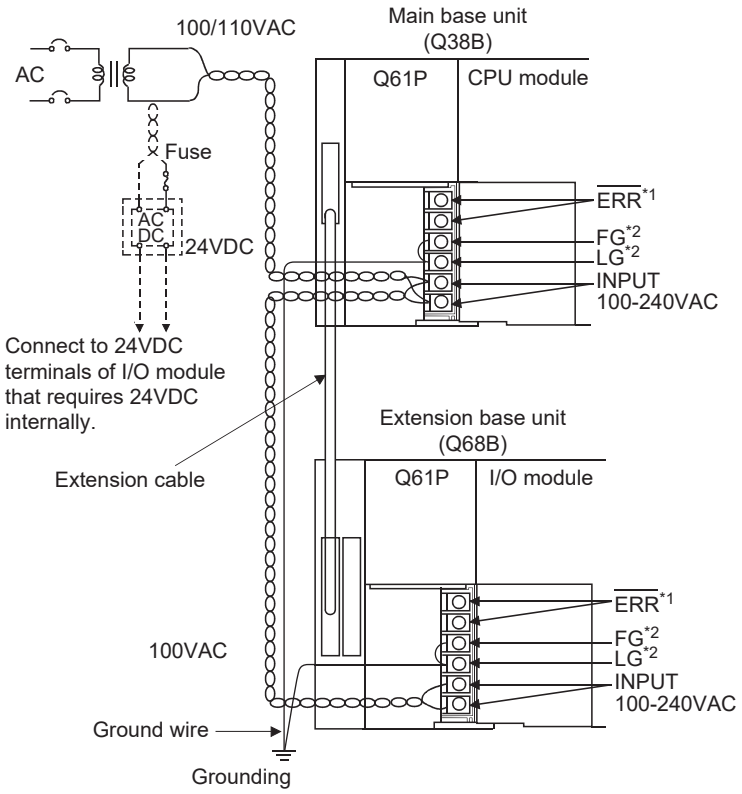

*1 The operation of the $\overline{\text{ERR}}$ terminal is as follows:
<When the power supply module is mounted on the main base unit>
The terminal turns off (opens) when the AC power is not input, a CPU module stop error (including a reset) occurs, or the fuse of the power supply module is blown.
<When the power supply module is mounted on the extension base unit>
The terminal is always off (opened).

*2 Ground the LG and FG terminals by using a ground wire as thick and short as possible (2mm in diameter).

Point

- Use the thickest possible (max. 2mm^2) wires for the 100/200VAC and 24VDC power cables. Twist these wires starting at the connection terminals. Use a solderless terminal for wiring a terminal block. To prevent short-circuit due to loosening screws, use the solderless terminals with insulation sleeves of 0.8mm or less.
Note that up to two solderless terminals can be connected per terminal block.

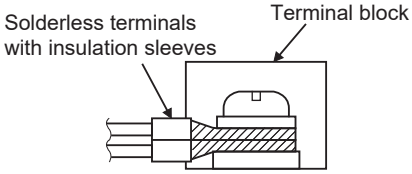

- When LG and FG terminals are connected, ground the wires.
If not, the programmable controller may become susceptible to noise.
Since the LG terminal has a half of the input voltage, touching this terminal may result in electric shock.
- No system error can be detected by the $\overline{\text{ERR}}$ terminal of an extension base unit. (The $\overline{\text{ERR}}$ terminal is always set to off.)

(b) Redundant power supply system

• Q64RPN

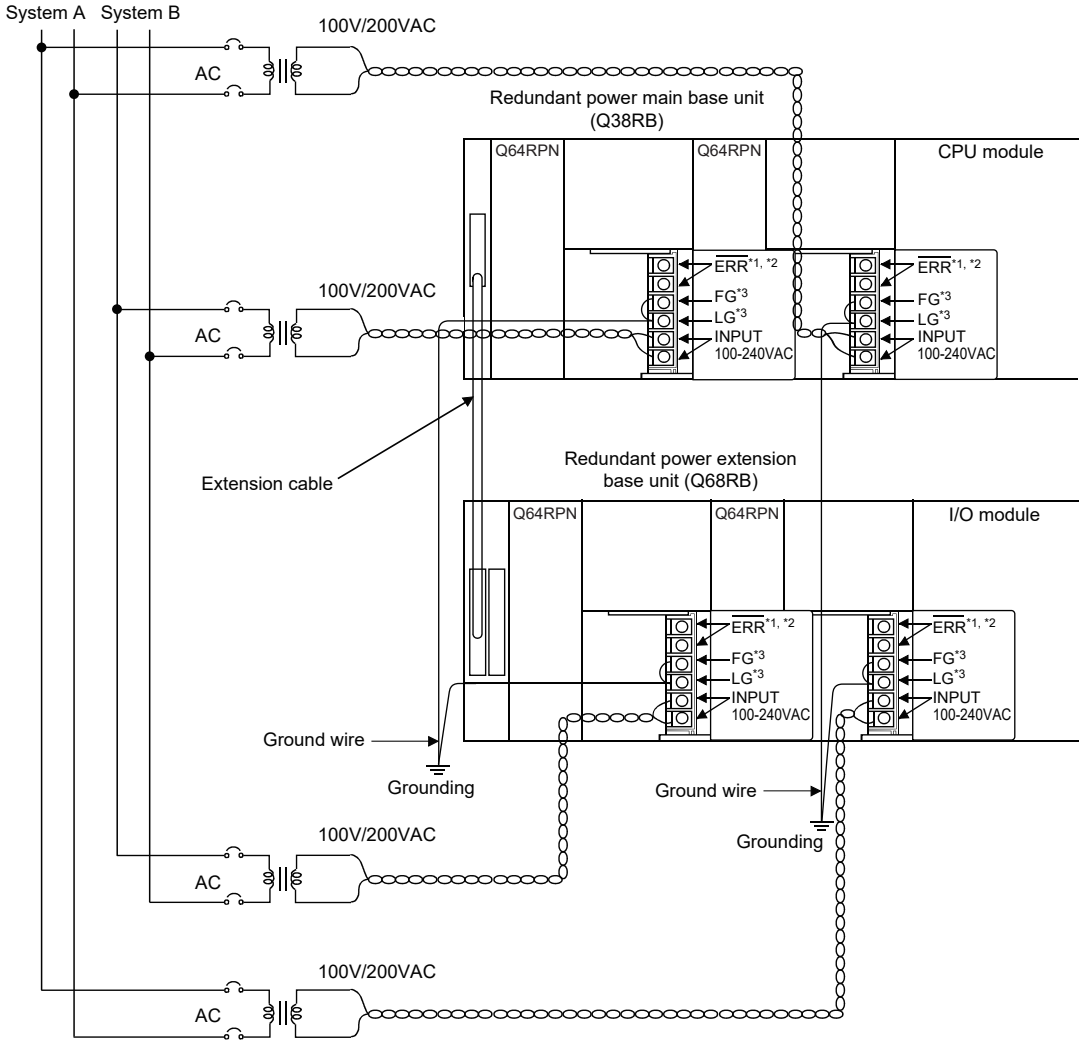

*1 The operation of the $\overline{\text{ERR}}$ terminal is as follows:
<When the redundant power supply module is mounted on the redundant power main base unit>
The terminal turns off (opens) when the AC power is not input, a CPU module stop error (including a reset) occurs, the redundant power supply module fails, or the fuse of the redundant power supply module is blown.
<When the redundant power supply module is mounted on the redundant power extension base unit>
The terminal turns off (opens) when the AC power is not input, the redundant power supply module fails, or the fuse of the redundant power supply module is blown.

*2 When input power is supplied to the redundant power supply module mounted on the redundant power main base unit and the redundant power supply module mounted on the redundant power extension base unit simultaneously, the ON (short) timing of the $\overline{\text{ERR}}$ terminal on the redundant power main base unit is later than that of the $\overline{\text{ERR}}$ terminal on the redundant power extension base unit by the initial processing time of the CPU module.

*3 Ground the LG and FG terminals by using a ground wire as thick and short as possible (2mm in diameter).

• Q64RP

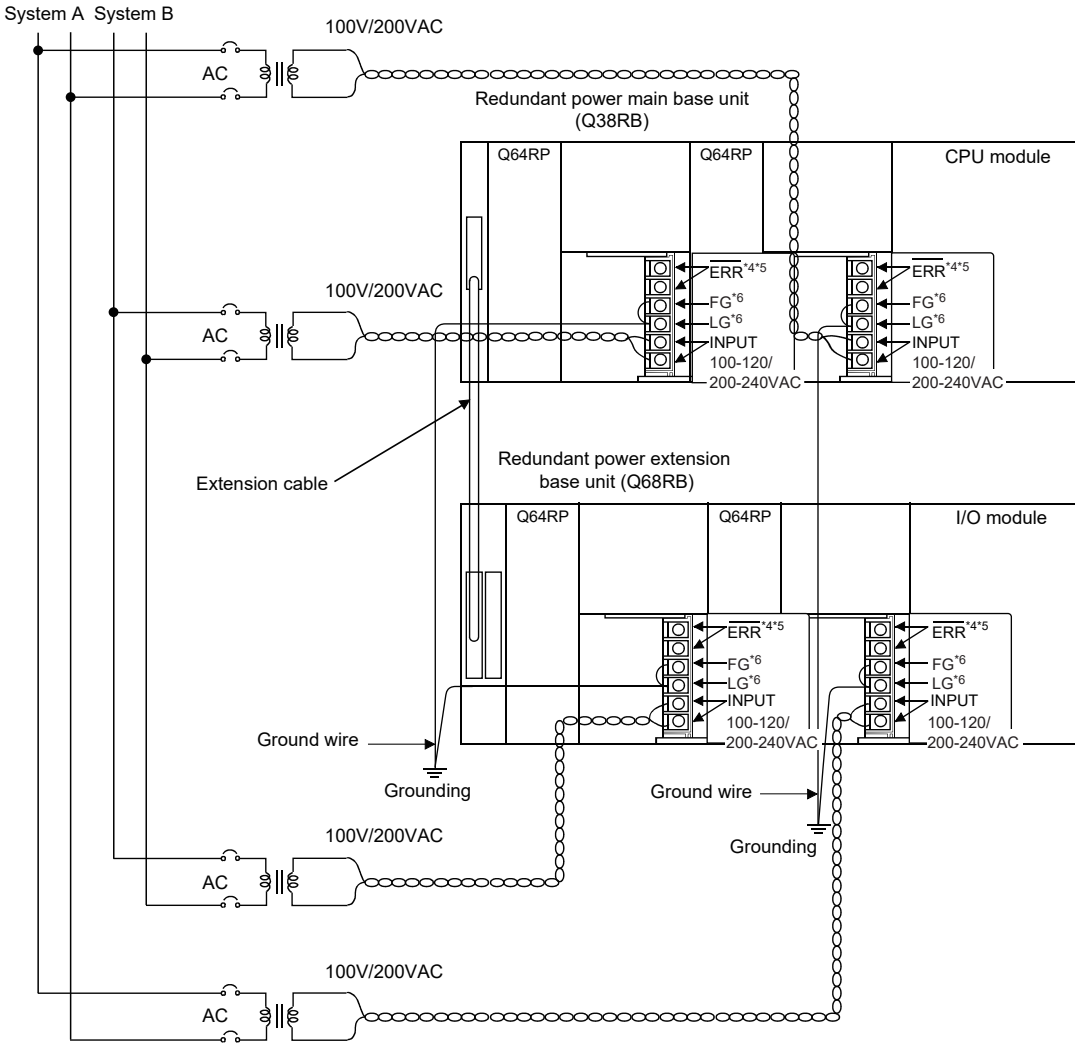

*4 The operation of the $\overline{\text{ERR}}$ terminal is as follows:
<When the redundant power supply module is mounted on the redundant power main base unit>
The terminal turns off (opens) when the AC power is not input, a CPU module stop error (including a reset) occurs, the redundant power supply module fails, or the fuse of the redundant power supply module is blown.
<When the redundant power supply module is mounted on the redundant power extension base unit>
The terminal turns off (opens) when the AC power is not input, the redundant power supply module fails, or the fuse of the redundant power supply module is blown.

*5 When input power is supplied to the redundant power supply module mounted on the redundant power main base unit and the redundant power supply module mounted on the redundant power extension base unit simultaneously, the ON (short) timing of the $\overline{\text{ERR}}$ terminal on the redundant power main base unit is later than that of the $\overline{\text{ERR}}$ terminal on the redundant power extension base unit by the initial processing time of the CPU module.

*6 Ground the LG and FG terminals by using a ground wire as thick and short as possible (2mm in diameter).

Point

- Use the thickest possible (max. 2mm^2) wires for the 100/200VAC and 24VDC power cables. Twist these wires starting at the connection terminals. Use a solderless terminal for wiring a terminal block. To prevent short-circuit due to loosening screws, use the solderless terminals with insulation sleeves of 0.8mm or less.
  Note that up to two solderless terminals can be connected per terminal block.

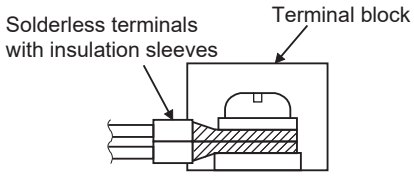

- Supply power to two redundant power supply modules individually (redundant power supply system).
- When two redundant power supply modules (Q64RPN, and Q64RP) are placed together and operated as a redundant power supply system, it is recommended to use one of them as an AC power input and connect the other to an uninterruptible power supply to the other.
- When the LG and FG terminals are connected, ground the wires.
  If not, the programmable controller may become susceptible to noise.
  The LG terminal has a half of the input voltage.

4.8.2 Wiring of 18-point screw terminal block

(1) Precautions

- Insulation-sleeved crimping terminals cannot be used with the terminal block.
  It is recommended to cover the wire connections of the crimping terminals with mark or insulation tubes.
- The wires used for connection to the terminal block must be 0.3 to 0.75mm^2 in core and 2.8mm max. in outside diameter.
- Run the input and output lines away from each other.
- When the lines cannot be run away from the main circuit and power lines, use a batch-shielded cable and ground it on the programmable controller side.
  In some cases, ground it in the opposite side.

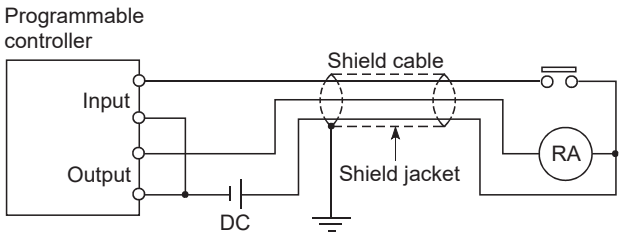

- Where wiring runs through piping, ground the piping.
- Run the 24VDC input line away from the 100VAC and 200VAC lines.
- Wiring of 200m or longer will raises current leakage due to the line capacity, resulting in a fault.
- To prevent electric shock or malfunction, provide the external power supply for the module to be changed online with means that can turn the power supply off individually, e.g. a switch. (☞ Page 281, CHAPTER 14)
- As a countermeasure against the power surge due to lightning, separate the AC wiring and DC wiring and connect a surge absorber for lightning as shown in Page 105, Section 4.8.1.
- Failure to do so increases the risk of I/O device failure due to lightning.

Point

For screw terminal blocks other than the 18-point screw terminal block, refer to the user's manual for the module used.

(2) Wiring method

(a) Wiring to an 18-point screw terminal block

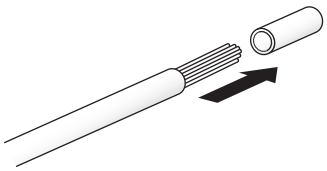

1. **Strip the insulating coating from the cable.**

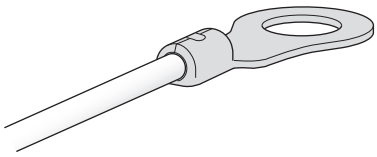

2. **Connect a solderless terminal to the stripped part of the cable.**

For applicable solderless terminals, refer to the specifications of each module.

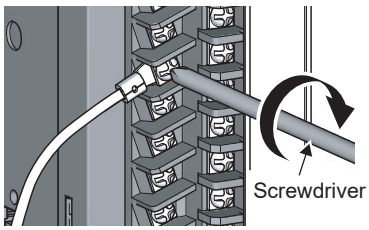

3. **Wire the solderless terminals to the 18-point screw terminal block.**

For terminal layout, refer to the specifications of each module.

4.8.3 Wiring to connectors

(1) Precautions

- Connectors for external devices (A6CON□) must be crimped, pressed, or correctly soldered.
- Plug connectors for external devices (A6CON□) securely to the module and tighten the two screws.
- Use copper wires having temperature rating of 75°C or more for the connectors.
- Tighten the connector screws within the following specified torque range.

Screw type	Tightening torque range
Connector screw (M2.6)	0.20 to 0.29N•m

- Place the cables in a duct or clamp them. If not, dangling cable may swing or inadvertently be pulled, resulting in damage to the module or cables or malfunction due to poor connection.

Point

To make the wiring comply with the EMC and Low Voltage Directives, refer to Page 673, Appendix 8.
Even when compliance with the EMC Directive and Low Voltage Directives is not required, configuring the system that complies with the EMC Directive may reduce external noise.

(2) Applicable connectors

The following tables list the crimp tool, pressure-displacement tools, and the types of connectors used for modules.

(a) 40-pin connector

Type	Model	Applicable wire size
Soldering connector (straight out type)	A6CON1	0.088 to 0.3mm^2 (28 to 22 AWG) (stranded) Use cables with outside diameter of 1.3mm or shorter to connect 40 cables to the connector.
Crimp connector (straight out type)	A6CON2	0.088 to 0.24mm^2 (28 to 24 AWG) (stranded)
Pressure-displacement connector (straight out type)	A6CON3	28 AWG (stranded) 30 AWG (solid) Flat cable of 1.27mm pitch
Soldering connector (both for straight out and 45-degree types)	A6CON4	0.088 to 0.3mm^2 (28 to 22 AWG) (stranded) Use cables with outside diameter of 1.3mm or shorter to connect 40 cables to the connector.

(b) Crimp tool and pressure-displacement tools for 40-pin connectors

Type	Model	Contact
Crimp tool	N363TT005H	OTAX CO., LTD.
Pressure-displacement tool	N367TT012H (locator plate)	
	N707TT001H (cable cutter)	
	N707TT101H (hand press)	

For wiring of the connectors and usage of the crimp tool and pressure-displacement tools, contact OTAX CO., LTD.

(3) Wiring method

(a) A6CON1, A6CON4

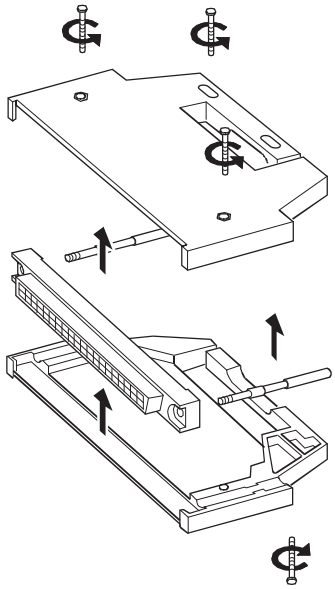

1. **Loosen the four fixing screws on the connector and remove the screws. Open the connector cover from the connector side.**

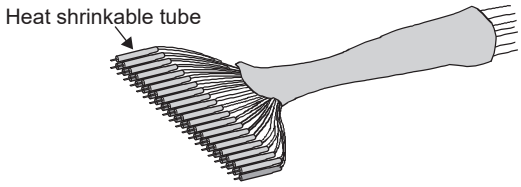

2. **Solder the wires and coat them with heat shrinkable tubes.**

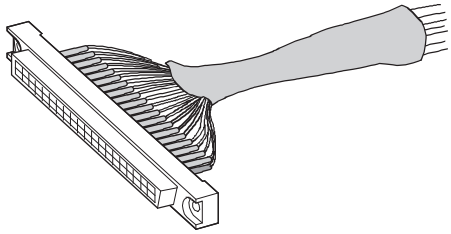

3. **Check the terminal layout and install the wires to the connector.**

When the connector is plugged into an I/O module, an FG wire needs not to be installed.

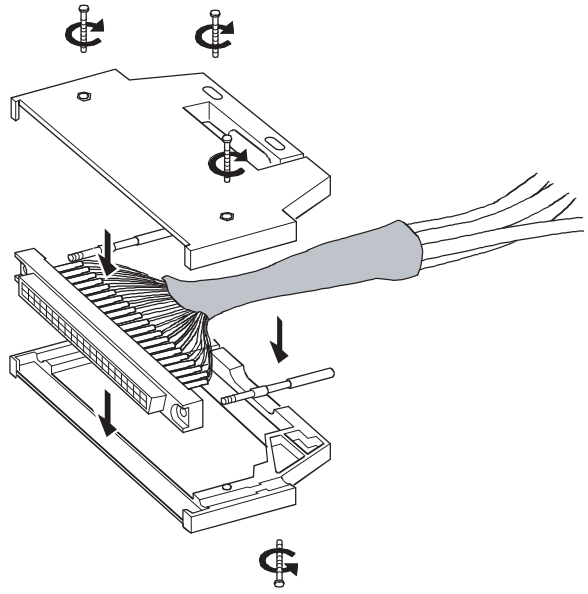

4. **Place the connector on one side of the connector cover and put the fixing screws through the screw holes. Cover the other connector cover onto the connector.**

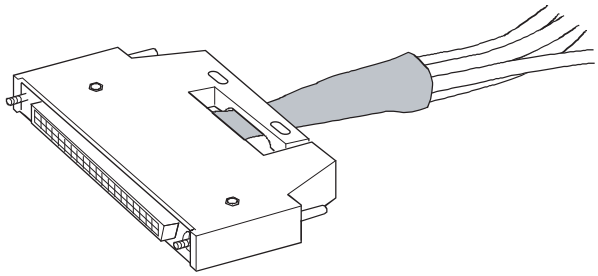

5. **Tighten the four screws.**

(b) A6CON2

The following table lists the specifications of the N363TT005H used for the A6CON2.

Applicable wire size	Cross-section area of wire	Crimp height	Outside diameter of coated wire	Length of stripped wire part
24 AWG	0.20 to 0.24mm^2	1.25 to 1.30	ϕ1.2 or less	3.0 to 4.0
26 AWG	0.13 to 0.16mm^2	1.20 to 1.25	ϕ1.2 or less	3.0 to 4.0
28 AWG	0.088 to 0.096mm^2	1.15 to 1.20	ϕ1.2 or less	3.0 to 4.0

Wiring of the A6CON2 requires special tools.
For usage and adjustment of the tools, contact OTAX CO., LTD.

(c) A6CON3

Wiring of the A6CON3 requires special tools.
For usage and adjustment of the tools, contact OTAX CO., LTD.

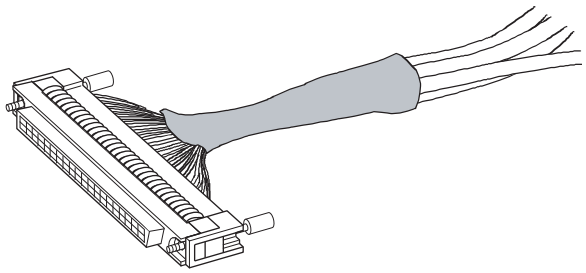

1. **Check the terminal layout and press the wires against the connector.**

Point

Arrangement for a flat cable is in the order of A1→ B1→ A2•••••.
(The following figure shows a connector seen from the plug-in side.)

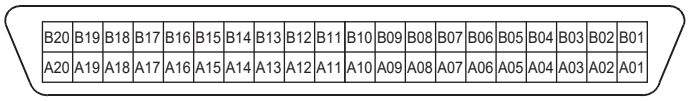

(4) Plugging a connector

(a) Installation procedure

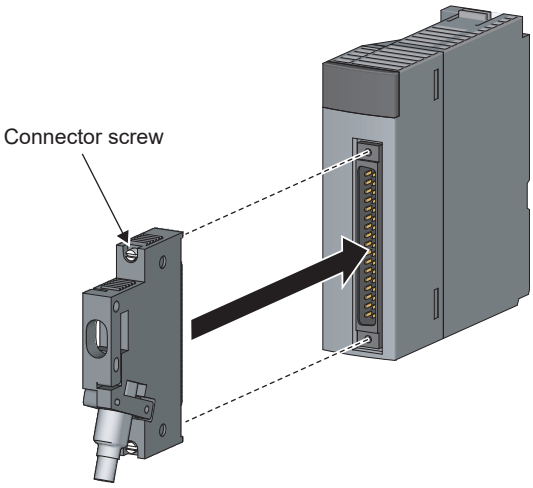

1. **Plug the connector into the slot on the module.**

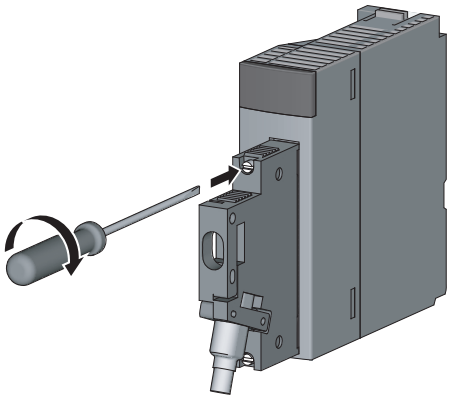

2. **Tighten the two connector screws (M2.6).**

(b) Removal procedure

Loosen the two connector screws, and then pull out the connector horizontally to the module.

4.8.4 Grounding

For grounding, perform the following:

- Use a dedicated grounding wire as far as possible. (Grounding resistance of 100Ω or less.)
- When a dedicated grounding cannot be provided, use (2) Shared grounding shown below.

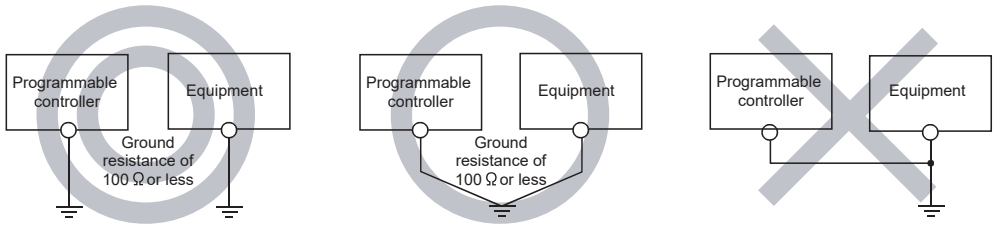

(1) Independent grounding…… Recommended (2) Shared grounding ……Allowed (3) Common grounding……Not allowed

- Use thick cables up to 2mm^2. Bring the grounding point close to the programmable controller as much as possible so that the ground cable can be shortened.

CHAPTER 5 GENERAL SPECIFICATIONS

The following table lists the general specifications of the programmable controller.

<table>
<tr><th>Item</th><th colspan="6">Specifications</th></tr>
<tr><td>Operating ambient temperature</td><td colspan="6">0 to 55°C</td></tr>
<tr><td>Storage ambient temperature</td><td colspan="6">-25 to 75°C*3</td></tr>
<tr><td>Operating ambient humidity</td><td colspan="6" rowspan="2">5 to 95%RH*4, non-condensing</td></tr>
<tr><td>Storage ambient humidity</td></tr>
<tr><td rowspan="5">Vibration resistance</td><td rowspan="5">Compliant with JIS B 3502 and IEC 61131-2</td><td></td><td>Frequency</td><td>Constant acceleration</td><td>Half amplitude</td><td>Sweep count</td></tr>
<tr><td rowspan="2">Under intermittent vibration</td><td>5 to 8.4Hz</td><td>----</td><td>3.5mm</td><td rowspan="2">10 times each in X, Y, Z directions</td></tr>
<tr><td>8.4 to 150Hz</td><td>9.8m/s^2</td><td>----</td></tr>
<tr><td rowspan="2">Under continuous vibration</td><td>5 to 8.4Hz</td><td>----</td><td>1.75mm</td><td rowspan="2">----</td></tr>
<tr><td>8.4 to 150Hz</td><td>4.9m/s^2</td><td>----</td></tr>
<tr><td>Shock resistance</td><td colspan="6">Compliant with JIS B 3502 and IEC 61131-2 (147 m/s^2, 3 times each in 3 directions X, Y, Z)</td></tr>
<tr><td>Operating atmosphere</td><td colspan="6">No corrosive gases</td></tr>
<tr><td>Operating altitude*5</td><td colspan="6">0 to 2000m</td></tr>
<tr><td>Installation location</td><td colspan="6">Inside a control panel</td></tr>
<tr><td>Overvoltage category*1</td><td colspan="6">II or less</td></tr>
<tr><td>Pollution degree*2</td><td colspan="6">2 or less</td></tr>
<tr><td>Equipment class</td><td colspan="6">Class I</td></tr>
</table>

*1 This indicates the section of the power supply to which the equipment is assumed to be connected between the public electrical power distribution network and the machinery within premises.
Category II applies to equipment for which electrical power is supplied from fixed facilities. The surge voltage withstand level for up to the rated voltage of 300V is 2500V.

*2 This index indicates the degree to which conductive material is generated in terms of the environment in which the equipment is used.
Pollution level 2 is when only non-conductive pollution occurs. A temporary conductivity caused by condensing must be expected occasionally.

*3 The storage ambient temperature is -20 to 75°C if the system includes the AnS/A series modules.

*4 The operating ambient humidity and storage ambient humidity are 10 to 90%RH if the system includes the AnS/A series modules.

*5 Do not use or store the programmable controller under pressure higher than the atmospheric pressure of altitude 0m. Doing so may cause malfunction. When using the programmable controller under pressure, please consult your local Mitsubishi Electric representative.

Memo

CHAPTER 6 CPU MODULE

6.1 Part Names

6.1.1 Basic model QCPU

(1) Q00JCPU

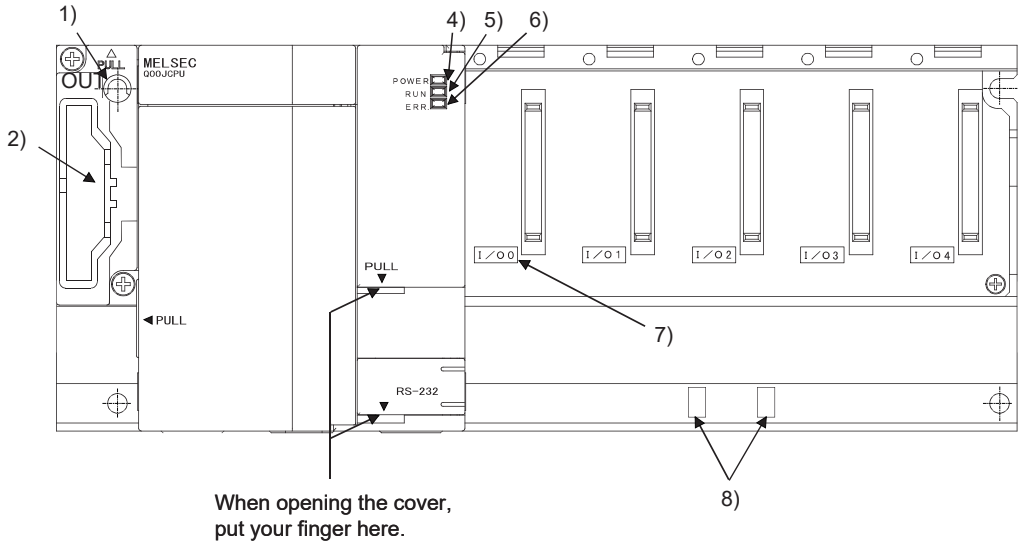

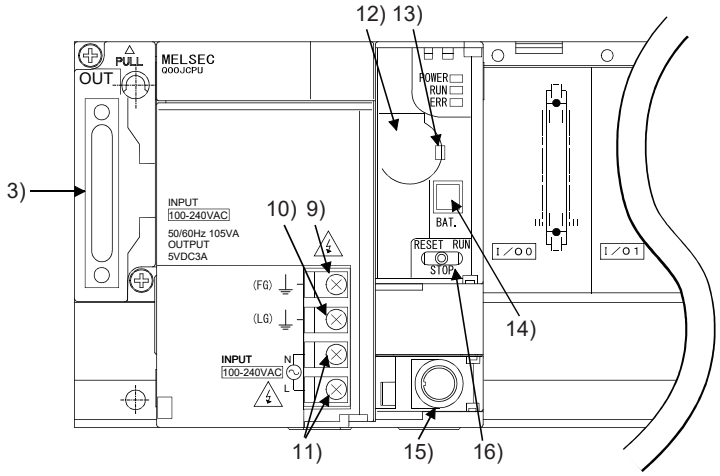

No.	Name	Application
1)	Base unit installation hole	Pear-shaped hole for installing the unit on a panel such as a control panel. (For M4 screw)
2)	Cover	Protective cover for extension cable connector. Remove this cover when connecting an extension base unit.
3)	Extension cable connector	Connector for transferring signals to or from the extension base unit. Connect an extension cable.
4)	POWER LED	Power indicator LED for 5VDC. Turns on in green during normal output of 5VDC.
5)	RUN LED	Indicates the operating status of the CPU module. On: During operation with the RUN/STOP/RESET switch set to "RUN" Off: During stop with the RUN/STOP/RESET switch set to "STOP" When the error that stops operation is detected Flash: When parameters/program is written during STOP and the RUN/STOP/RESET switch is moved from "STOP" to "RUN". To turn on the RUN LED after writing the program, perform the following operations. • Set the RUN/STOP/RESET switch from "STOP" to "RUN" to "STOP" to "RUN". • Perform reset with the RUN/STOP/RESET switch. (☞ Page 198, Section 6.4.1) • Power on the programmable controller again. To turn on the RUN LED after writing the parameters, perform the following operations. • Perform reset with the RUN/STOP/RESET switch. • Power on the programmable controller again. (If the RUN/STOP/RESET switch is set from "RUN" to "STOP" to "RUN" after changing the parameter values, the new values are not reflected on the parameters related to the intelligent function module, such as the network parameters.)
6)	ERR. LED	On: When the self-diagnostic error that will not stop operation is detected. • When continuation of operation at error detection is set in the parameter. • When the annunciator (F) is turned on by the SET/OUT instruction. • When battery low occurs. Off: Normal Flash: When the error that stops operation is detected. When reset operation is performed with the RUN/STOP/RESET switch.
7)	Module connector	Connector used for mounting an I/O module or intelligent function module. (To the connector of the spare space where no module is mounted, fit the accessory connector cover or the blank cover module (QG60) to prevent dust from entering.)
8)	DIN rail adaptor mounting holes	Holes for mounting a DIN rail adaptor.
9)	FG terminal	Ground terminal connected with the shield pattern of the printed circuit board.
10)	LG terminal	Power filter ground having a half potential of the input voltage.
11)	Power input terminals	Power input terminals for connection of a 100VAC to 200VAC power supply.
12)	Battery	Backup battery for use of the program memory, standard RAM, clock function and backup power time function.
13)	Battery fixing hook	Hook for holding the battery.
14)	Battery connector pin	For connection of the battery lead wires. (Lead wires are disconnected from the connector when shipping to prevent the battery from consuming.)

No.	Name	Application
15)	RS-232 connector*1	Connector for connecting a peripheral device by RS-232. Can be connected by the RS-232 connection cable (QC30R2).
16)	RUN/STOP/RESET switch*2	RUN: Executes sequence program operation. STOP: Stops sequence program operation. RESET: Performs hardware reset, operation error reset, operation initialization or like. (☞ Page 198, Section 6.4.1)

*1 When a cable is connected to the RS-232 connector at all times, clamp the cable to prevent a poor connection, moving, and disconnection by unintentional pulling.
The Q6HLD-R2 type RS-232 connection disconnection prevention holder is available as a clamp for RS-232 connector.

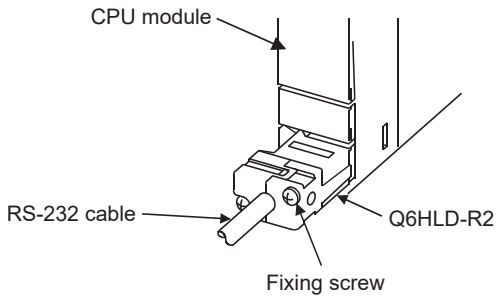

*2 Operate the RUN/STOP/RESET switch with your fingertips.
To prevent the switch from being damaged, do not use any tool such as screw driver.

(2) Q00CPU, Q01CPU

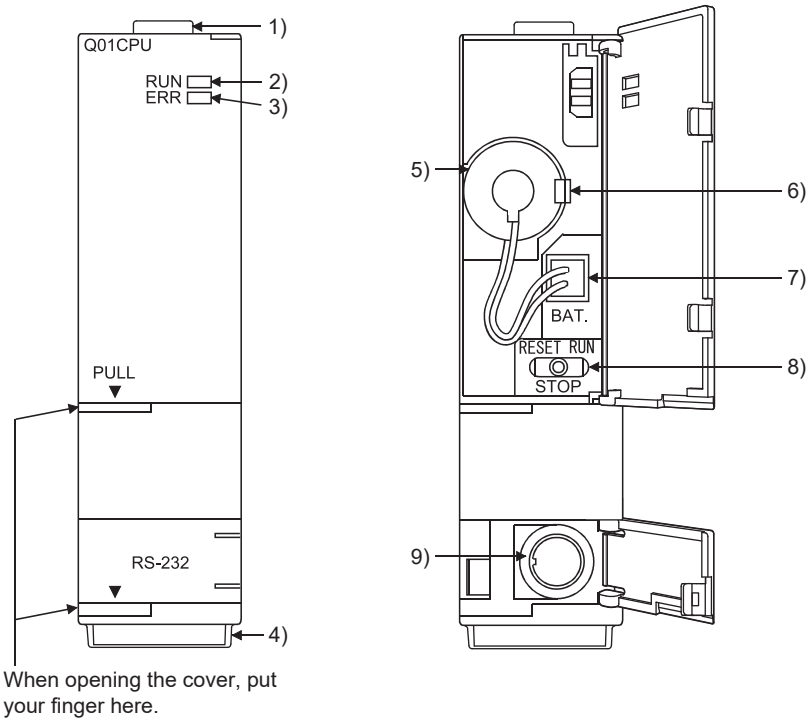

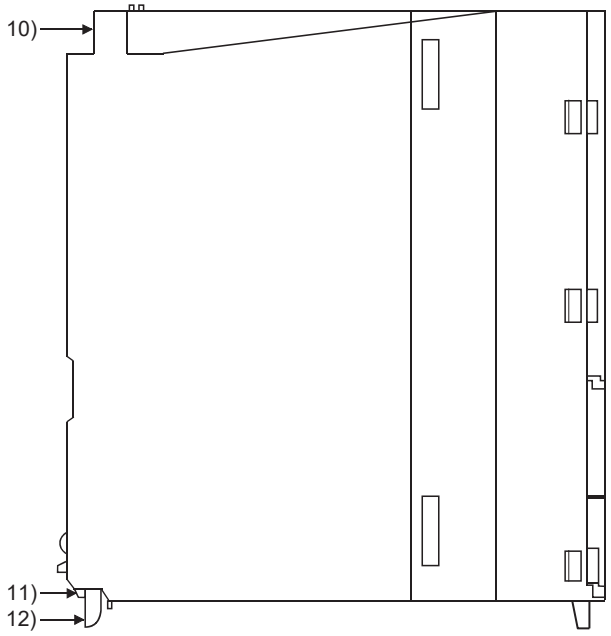

No.	Name	Application
1)	Module fixing hook	Hook used to fix the module to the base unit. (Single-motion installation)
2)	RUN LED	Indicates the operating status of the CPU module. On: During operation with the RUN/STOP/RESET switch set to "RUN". Off: During stop with the RUN/STOP/RESET switch set to "STOP". When the error that stops operation is detected Flash: When parameters/program is written during STOP and the RUN/STOP/RESET switch is set from "STOP" to "RUN". To turn on the RUN LED after writing the program, perform the following operations. • Move the RUN/STOP/RESET switch from "STOP" to "RUN" to "STOP" to "RUN". • Perform reset with the RUN/STOP/RESET switch. (☞ Page 198, Section 6.4.1) • Power on the programmable controller again To turn on the RUN LED after writing the parameters, perform the following operations. • Perform reset with the RUN/STOP/RESET switch. • Power on the programmable controller again. (If the RUN/STOP/RESET switch is set from "RUN" to "STOP" to "RUN" after changing the parameter values, the new values are not reflected on the parameters related to the intelligent function module, such as the network parameters.)
3)	ERR. LED	On: When the self-diagnostic error that will not stop operation is detected. • When continuation of operation at error detection is set in the parameter. • When the annunciator (F) is turned on by the SET/OUT instruction. • When battery low occurs. Off: Normal Flash: When the error that stops operation is detected. When reset operation is performed with the RUN/STOP/RESET switch.
4)	Serial number display	Shows the serial number printed on the rating plate.
5)	Battery	Backup battery for use of the program memory, standard RAM, and backup power time function.
6)	Battery fixing hook	Hook for holding the battery.
7)	Battery connector pin	For connection of the battery lead wires. (Lead wires are disconnected from the connector when shipping to prevent the battery from consuming.)
8)	RUN/STOP/RESET switch*2	RUN: Executes sequence program operation. STOP: Stops sequence program operation. RESET: Performs hardware reset, operation error reset, operation initialization or like. (☞ Page 198, Section 6.4.1)
9)	RS-232 connector*1	Connector for RS-232 connection Can be connected by the RS-232 connection cable (QC30R2).
10)	Module fixing screw hole	Hole for the screw used to fix to the base unit. (M3 × 12 screw)
11)	Module fixing projection	Projection used to secure the module to the base unit.
12)	Module mounting lever	Lever used to mount the module to the base unit.

*1 When a cable is connected to the RS-232 connector at all times, clamp the cable to prevent a poor connection, moving, and disconnection by unintentional pulling.
The Q6HLD-R2 type RS-232 connection disconnection prevention holder is available as a clamp for RS-232 connector.

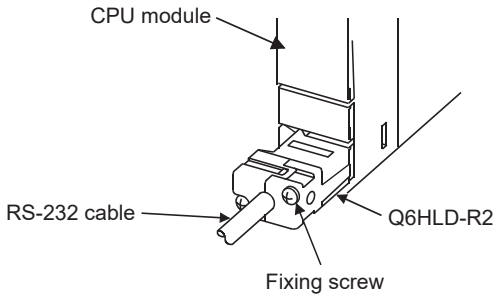

*2 Operate the RUN/STOP/RESET switch with your fingertips.
To prevent the switch from being damaged, do not use any tool such as screw driver.

6.1.2 High Performance model QCPU, Process CPU and Redundant CPU

(1) Q02CPU, Q02HCPU, Q06HCPU, Q12HCPU, Q25HCPU, Q02PHCPU, Q06PHCPU, Q12PHCPU, Q25PHCPU

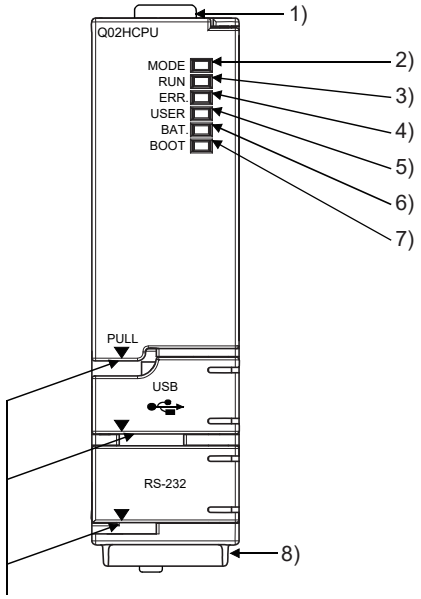

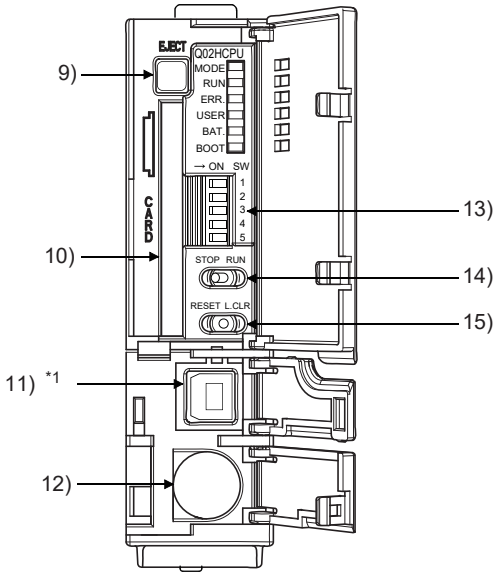

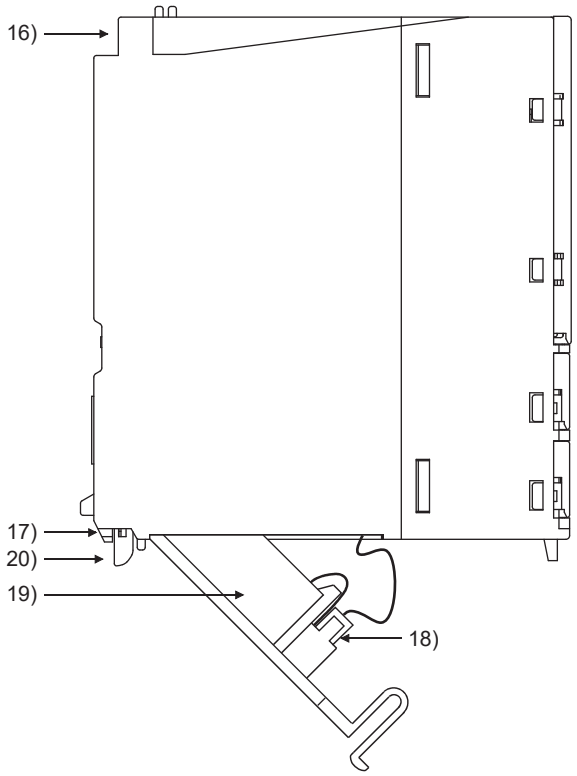

*1 Not provided for Q02CPU.

(2) Q12PRHCPU, Q25PRHCPU

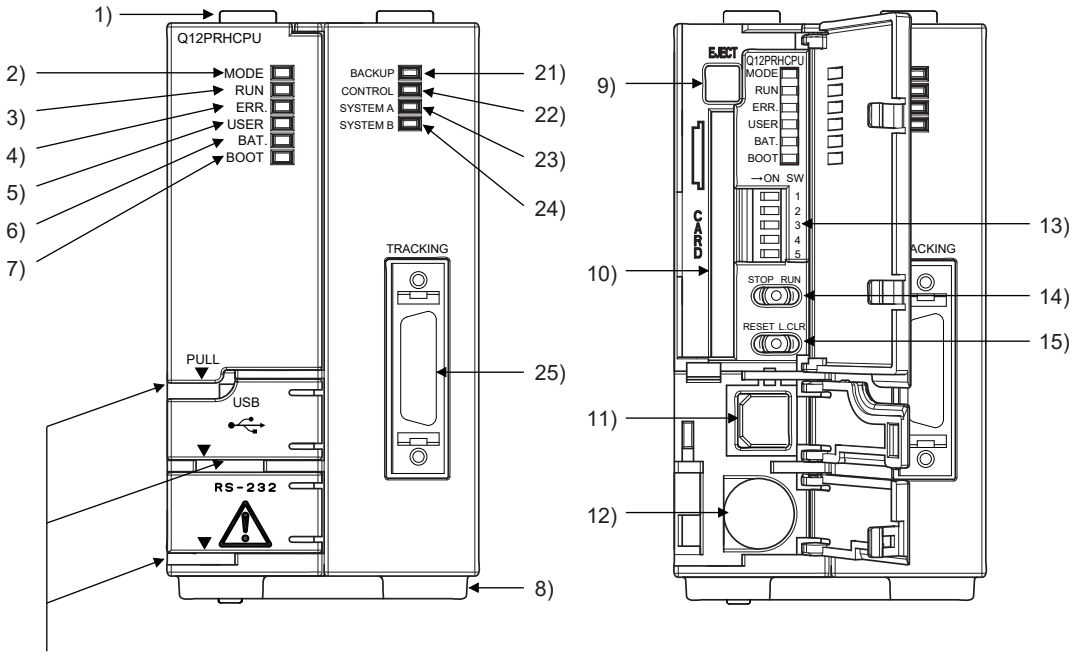

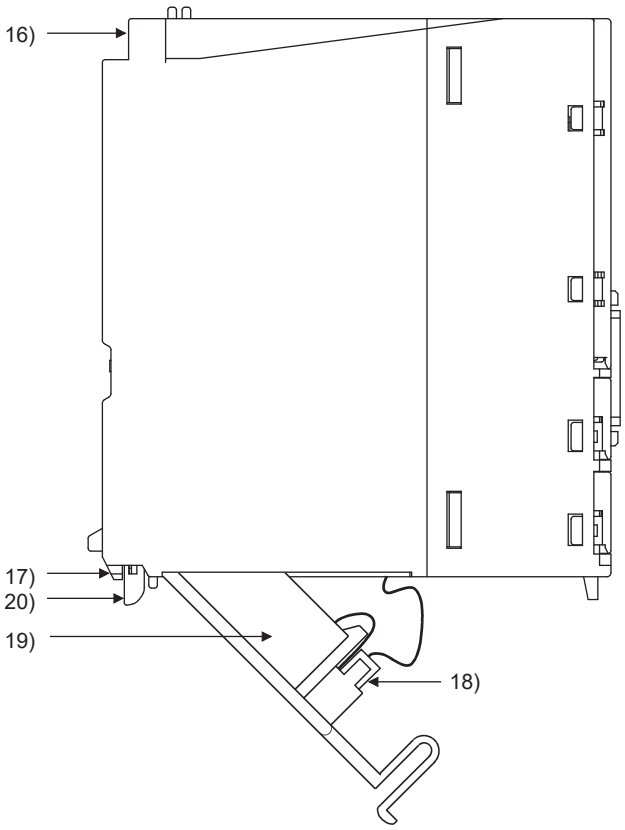

No.	Name	Application
1)	Module fixing hook	Hook used to secure the module to the base unit. (Single-motion installation)
2)	MODE LED	Indicates the mode of the CPU module. On (green): Q mode Flash (green): Forced on and off for external I/O registered
3)	RUN LED	Indicates the operating status of the CPU module. On: The RUN/STOP switch is set to "RUN". Off: The RUN/STOP switch is set to "STOP". (The standby system Redundant CPU module in the backup mode does not turn on even when the RUN/STOP switch is set to "RUN" but the module is stopped.) When an error is detected and operation must be halted due to the error Flash: Parameters or programs are written with the RUN/STOP switch set to "STOP" and then the RUN/STOP switch is turned from "STOP" to "RUN." When the operation mode is changed from the backup mode to the separate mode in the Redundant CPU system, the RUN LED of the standby system side CPU module flashes. To turn on the RUN LED after writing the program, perform the following operations. • Set the RUN/STOP switch from "RUN" → "STOP" → "RUN". • Reset with the RESET/L. CLR switch. • Restart the programmable controller power. To turn on the RUN LED after writing the parameters, perform the following operations. • Reset with the RESET/L. CLR switch. • Restart the programmable controller power. (If the RUN/STOP switch is set from "RUN" → "STOP" → "RUN" after changing the parameters, network parameters and intelligent function module parameters will not be updated.)
4)	ERR. LED	On: Detect on of self-diagnosis error which will not stop operation, except battery error. (When operation continued at error detection is set in the parameter setting.) Off: Normal Flash: Detection of the error that stops operation. When automatic write to the standard ROM is completed normally. (The BOOT LED flashes together.)
5)	USER LED	On: Error detected by CHK instruction or annunciator (F) turned ON Off: Normal Flash: Execution of latch clear
6)	BAT. LED	On: Battery error due to reduction in battery voltages of CPU module or memory card. Off: Normal
7)	BOOT LED	On: Start of boot operation Off: Non-execution of boot operation Flash: When automatic write to the standard ROM is completed normally. (The ERR. LED flashes together.)
8)	Serial number display	Shows the serial number printed on the rating plate.
9)	Memory card EJECT button	Used to eject the memory card from the CPU module.
10)	Memory card installing connector	Connector used for installing the memory card to the CPU module.
11)	USB connector[*1]	Connector for connection with USB-compatible peripheral device. (Connector type B) Can be connected by USB-dedicated cable. (Not available for Q02CPU.)
12)	RS-232 connector[*1]	Connector for connecting a peripheral device by RS-232. Can be connected by RS-232 connection cable (QC30R2).

<table>
<tr><th>No.</th><th>Name</th><th>Application</th></tr>
<tr><td rowspan="5">13)</td><td rowspan="5">DIP switches*2
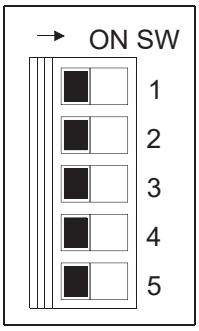</td><td>Used to set the items for operation of the CPU module.
For the system protection and the valid parameter drives of the DIP switches, refer to the following.
Qn(H)/QnPH/QnPRHCPU User's Manual (Function Explanation, Program Fundamentals)</td></tr>
<tr><td>SW1 : Used to set system protection. Inhibits all the writing and control instructions to the CPU module. (Factory-default is off)
Off: No protection
On: Protection</td></tr>
<tr><td>SW2, SW3 : Used to specify parameter-valid drive.
(Both SW2 and SW3 are preset to off as factory default)
<table>
<tr><th>SW2</th><th>SW3</th><th>Parameter Drive</th></tr>
<tr><td>OFF</td><td>OFF</td><td>Program memory (Drive 0)</td></tr>
<tr><td>ON</td><td>OFF</td><td>SRAM card (Drive 1)</td></tr>
<tr><td>OFF</td><td>ON</td><td>Flash card/ATA card (Drive 2)</td></tr>
<tr><td>ON</td><td>ON</td><td>Standard ROM (Drive 4)</td></tr>
</table>
(Parameters cannot be stored in standard RAM (Drive 3).)</td></tr>
<tr><td>SW4: Must not be used. Normally off. (Factory default: Off)</td></tr>
<tr><td>SW5: Must not be used. Normally off. (Factory default: Off)</td></tr>
<tr><td>14)</td><td>RUN/STOP switch*3</td><td>RUN: Executes sequence program operation.
STOP: Stops sequence program operation.</td></tr>
<tr><td>15)</td><td>RESET/L. CLR switch*3</td><td>RESET:
Used to perform hardware reset, operation fault rest, operation initialization, etc.
(If this switch is left in the RESET position, the whole system will be reset and the system will not operate properly. After performing reset, always return this switch to the neutral position.)
L. CLR:
Used to turn "Off" or clear to "zero" all latch area data set in the parameter.
Used to clear the sampling trace settings.</td></tr>
<tr><td>16)</td><td>Module fixing screw hole</td><td>Hole for the screw used to fix to the base unit. (M3 × 12 screw)</td></tr>
<tr><td>17)</td><td>Module fixing projection</td><td>Projection used to fix the module to the base unit.</td></tr>
<tr><td>18)</td><td>Battery connector pin</td><td>For connection of battery lead wires.
(Lead wires are disconnected from the connector when shipping to prevent the battery from consuming.)</td></tr>
<tr><td>19)</td><td>Battery</td><td>Backup battery for use of program memory, standard RAM, and the backup power time function.</td></tr>
<tr><td>20)</td><td>Module mounting lever</td><td>Lever used to mount the module to the base unit.</td></tr>
<tr><td>21)</td><td>BACKUP LED*4</td><td>Indicates the backup or separate mode while the system is running normally.
On (green): Backup mode
On (red):The status in which control (RUN) cannot be continued by system switching
On (orange):Separate mode
Off: Debug mode
The LED indication is as listed below when the memory copy from control system to standby system is executed.
<table>
<tr><th rowspan="2"></th><th colspan="2">In backup mode</th><th colspan="2">In separate mode</th></tr>
<tr><th>Control system</th><th>Standby system</th><th>Control system</th><th>Standby system</th></tr>
<tr><td>Memory copy executing</td><td>ON (red)</td><td>Flashing (red)</td><td>ON (orange)</td><td>Flashing (orange)</td></tr>
<tr><td>Memory copy normally completed</td><td>ON (red)</td><td>ON (red)</td><td>ON (orange)</td><td>ON (orange)</td></tr>
</table>
For the memory copy from control system to standby system, refer to the following.
QnPRHCPU User's Manual (Redundant System)</td></tr>
</table>

No.	Name	Application
22)	CONTROL LED*4	Indicates the CPU module operates as control system or standby system. On: Control system (The standby system is normal and system switching is available.) Off: Standby system Note that this LED turns on in the debug mode.
23)	SYSTEM A LED*4	The LED of the CPU module on the system A side turns on. On: System A Flash: When the tracking cable is disconnected while the system runs normally as the system A. (It lasts until the system A side tracking cable is connected.) Off: System B (The SYSTEM B LED turns on.) Note that this LED turns on in the debug mode.
24)	SYSTEM B LED*4	The LED of the CPU module on the system B side turns on. On: System B Flash: When the tracking cable is disconnected while the system runs normally as the system B (It lasts until the system B side tracking cable is connected.) Off: System A (The SYSTEM A LED turns on.) Note that this LED turns off in the debug mode.
25)	TRACKING connector*4	Connector for connecting system A or B with the tracking cable.

*1 When a cable is connected to the RS-232 connector at all times, clamp the cable to prevent a poor connection, moving, and disconnection by unintentional pulling.
The Q6HLD-R2 type RS-232 connector disconnection prevention holder is available as a clamp for RS-232 connector.

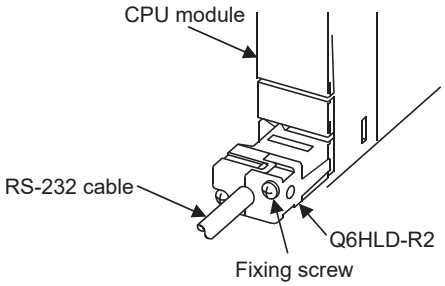

*2 Because the DIP switches are located out of reach of fingertips, operate it with a tool such as screwdriver. Careful attention must be paid to prevent the switch part from being damaged.
*3 Operate the RUN/STOP switch and RESET/L. CLR switch with your fingertips.
To prevent the switch from being damaged, do not use any tool such as screw driver.
*4 Applicable only to the Redundant CPU.

6.1.3 Universal model QCPU

(1) Q00UJCPU

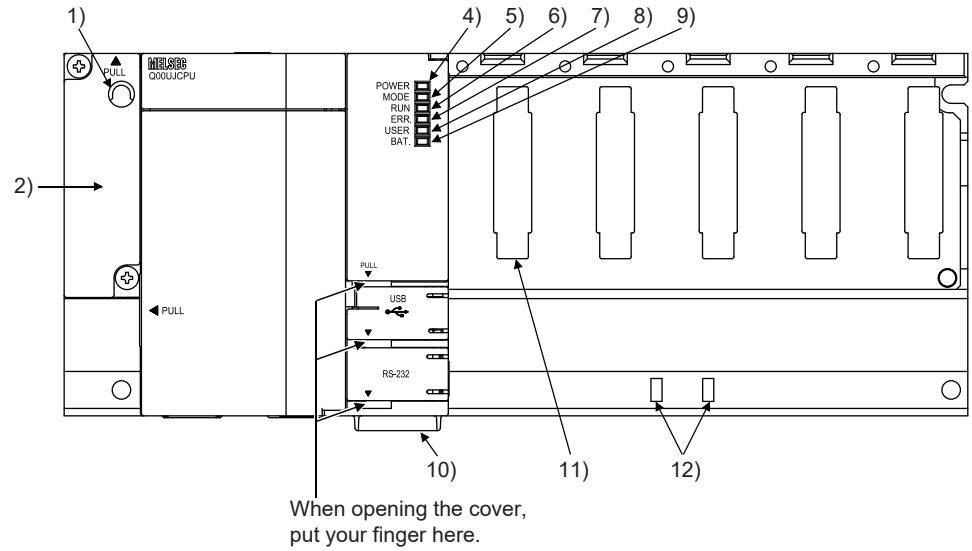

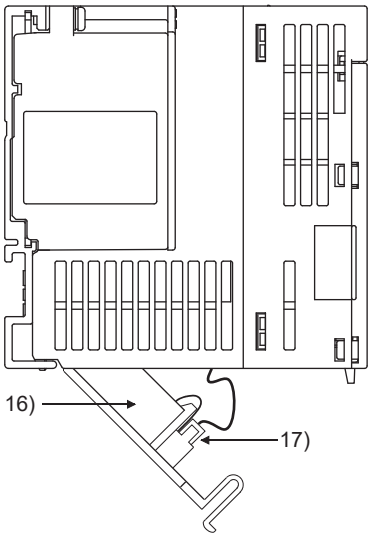

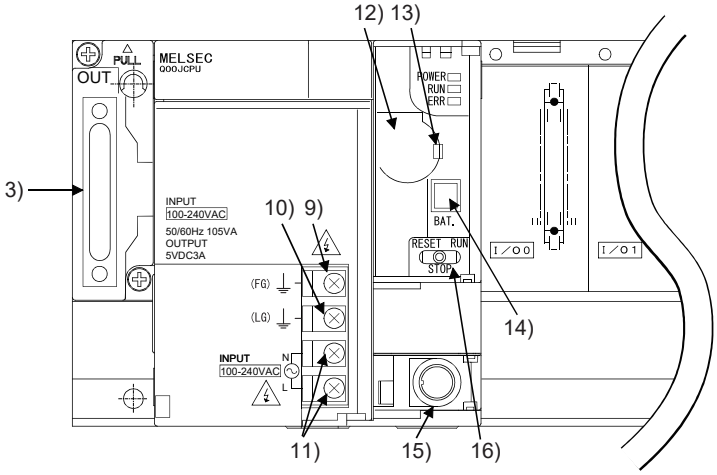

No.	Name	Application
1)	Base unit installation hole	Pear-shaped hole for installing the unit on a panel such as a control panel. (For M4 screw)
2)	Cover	Protective cover for extension cable connector. Remove this cover when connecting an extension base unit.
3)	Extension cable connector	Connector for transferring signals to or from the extension base unit. Connect an extension cable.
4)	POWER LED	Power indicator LED for 5VDC. Turns on in green during normal output of 5VDC.
5)	MODE LED	Indicates the mode of the CPU module. On: Q mode Flash: Executional conditioned device test is being executed. External input/output forced on/off function is being executed.
6)	RUN LED	Indicates the operating status of the CPU module. On: During operation with the RUN/STOP/RESET switch set to "RUN" Off: During stop with the RUN/STOP/RESET switch set to "STOP" When the error that stops operation is detected. Flash: When parameters or a program is written during STOP and the RUN/STOP/RESET switch is moved from "STOP" to "RUN". To turn on the RUN LED after writing the program, perform the following operations. • Shift the RUN/STOP/RESET switch from "RUN" to "STOP" to "RUN". • Perform reset with the RUN/STOP/RESET switch. • Power on the programmable controller again. To turn on the RUN LED after writing the parameters, perform the following operations. • Perform reset with the RUN/STOP/RESET switch. • Power on the programmable controller again. (If the RUN/STOP/RESET switch is shifted from "RUN" to "STOP" to "RUN" after changing the parameter values, the new values are not reflected on the parameters related to the intelligent function module, such as the network parameters.)
7)	ERR. LED	On: When the self-diagnostic error (other than a battery error) that will not stop operation is detected. (When continuation of operation at error detection is set in the parameter) Off: Normal Flash: When the error that stops operation is detected. When reset operation is performed with the RUN/STOP/RESET switch.
8)	USER LED	On: Annunciator (F) turned on. Off: Normal
9)	BAT. LED	Flash (yellow): Battery error due to voltage drop of the CPU module battery. On (green): Keeps on for 5 seconds after competing of restoring the data that are backed up by the latch data backup function to the standard ROM. Flash (green): When data are backed up to the standard ROM by the latch data backup function Off: Normal
10)	Serial number display	Shows the serial number printed on the rating plate.
11)	Module connector	Connector used for mounting an module or intelligent function module. (To the connector of the spare space where no module is mounted, fit the accessory connector cover or the blank cover module (QG60) to prevent dust from entering.)
12)	DIN rail adopter mounting holes	Holes for mounting a DIN rail adaptor.
13)	FG terminal	Ground terminal connected with the shield pattern of the printed circuit board.
14)	LG terminal	Power filter ground having a half potential of the input voltage.
15)	Power input terminals	Power input terminals for connection of a 100VAC to 200VAC power supply.
16)	Battery	Backup battery for use of the standard RAM and battery power time function.

No.	Name	Application
17)	Battery connector pin	For connection of the battery lead wires. (Lead wires are disconnected from the connector when shipping to prevent the battery from consuming.)
18)	USB connector*1	Connector for connection with USB-compatible peripheral devices. (Connector type miniB) Can be connected by USB-dedicated cable.
19)	RS-232 connector*1	Connector for connecting a peripheral device by RS-232. Can be connected by RS-232 connection cable. (QC30R2)
20)	RUN/STOP/RESET switch*2	RUN: Executes sequence program operation. STOP: Stops sequence program operation. RESET: Performs hardware reset, operation error reset, operation initialization or like. (☞ Page 198, Section 6.4.1)

*1 When leaving a cable connected to a USB connector or RS-232 connector, clamp the cable.
The Q6HLD-R2 type RS-232 connector disconnection prevention holder is available as a clamp for the RS-232 connector.

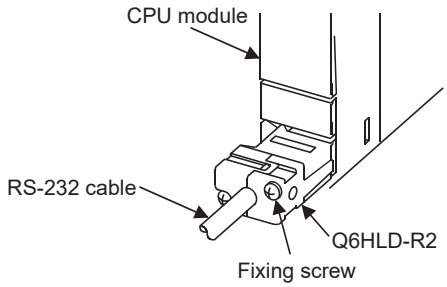

*2 Operate the RUN/STOP/RESET switch with your fingertips.
To prevent the switch from being damaged, do not use any tool such as screw driver.

(2) Q00UCPU, Q01UCPU

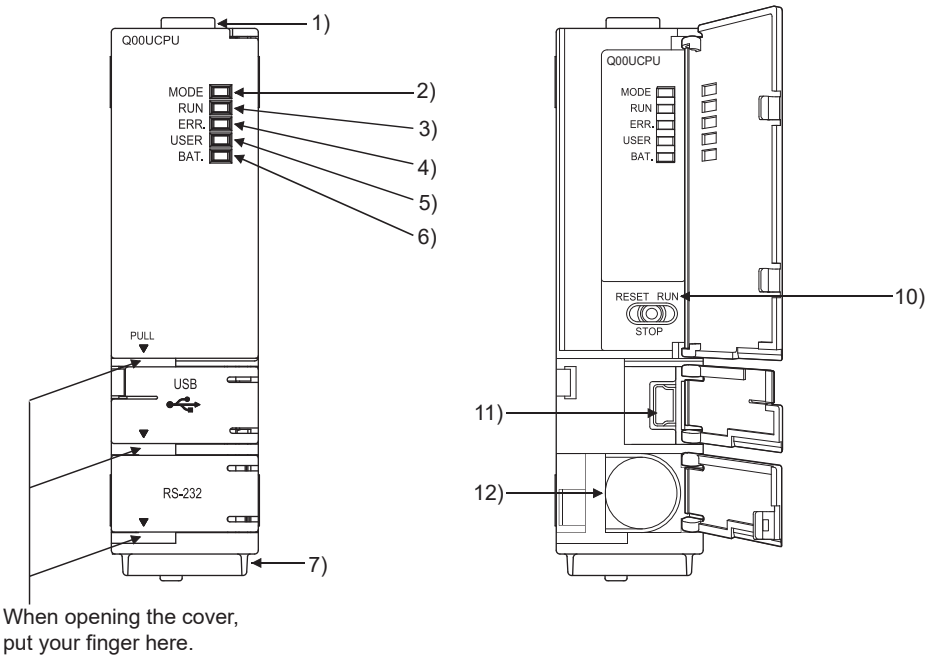

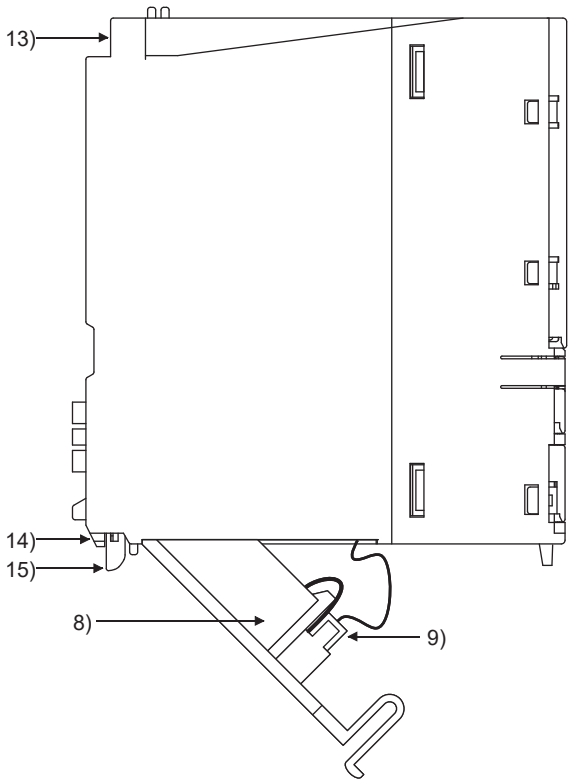

No.	Name	Application
1)	Module fixing hook	Hook used to fix the module to the base unit. (Single-motion installation)
2)	MODE LED	Indicates the mode of the CPU module. On: Q mode Flash: Executional conditioned device test is being executed. External input/output forced on/off function is being executed.
3)	RUN LED	Indicates the operating status of the CPU module. On: During operation with the RUN/STOP/RESET switch set to "RUN" Off: During stop with the RUN/STOP/RESET switch set to "STOP" When an error that stops operation is detected. Flash: Parameters or programs are written with the RUN/STOP/RESET switch set to "STOP", and then the RUN/STOP/RESET switch is turned from "STOP" to "RUN." To turn on the RUN LED after writing the program, perform the following operations. • Set the RUN/STOP/RESET switch in the order of "RUN" → "STOP" → "RUN". • Perform reset with the RUN/STOP/RESET switch. • Power on the programmable controller again. To turn on the RUN LED after writing the parameters, perform the following operations. • Perform reset with the RUN/STOP/RESET switch. • Power on the programmable controller again. (If the RUN/STOP/RESET switch is set in the order of "RUN" → "STOP" → "RUN" after changing the parameters, network parameters and intelligent function module parameters will not be updated.)
4)	ERR. LED	On: Detection of self-diagnosis error which will not stop operation, except battery error. (When operation continued at error detection is set in the parameter setting.) Off: Normal Flash: Detection of the error that stops operation. When reset operation becomes valid with the RUN/STOP/RESET switch.
5)	USER LED	On: Annunciator (F) turned on. Off: Normal
6)	BAT. LED	On (yellow): Battery error due to battery voltage drop of the CPU module. On (green): Turned on for 5 seconds after restoring of data backed up to the standard ROM by the latch data backup is completed. Flash (green): Flashes when backup of data to the standard ROM by latch data backup is completed. Off: Normal
7)	Serial number display	Shows serial number printed on the rating plate.
8)	Battery	Backup battery for use of the standard RAM and backup power time function.
9)	Battery connector pin	For connection of battery lead wires. (Lead wires are disconnected from the connector when shipping to prevent the battery from consuming.)
10)	RUN/STOP/RESET switch*2	RUN: Executes sequence program operation STOP: Stops sequence program operation RESET: Performs hardware reset, operation error reset, operation initialization, and like. (☞ Page 198, Section 6.4.1)
11)	USB connector*1	Connector for connection with USB-compatible peripheral device. (Connector type miniB) Can be connected by USB-dedicated cable.
12)	RS-232 connector*1	Connector for connecting a peripheral device by RS-232. Can be connected by RS-232 connection cable (QC30R2).
13)	Module fixing holes	Hole for the screw used to fix to the base unit. (M3 × 12 screw)

No.	Name	Application
14)	Module fixing projection	Projection used to secure the module to the base unit.
15)	Module mounting lever	Lever used to mount the module to the base unit.

*1 When leaving a cable connected to a USB connector or RS-232 connector, clamp the cable to prevent a poor connection, moving, and disconnection by unintentional pulling.
The Q6HLD-R2 type RS-232 connector disconnection prevention holder is available as a clamp for the RS-232 connector.

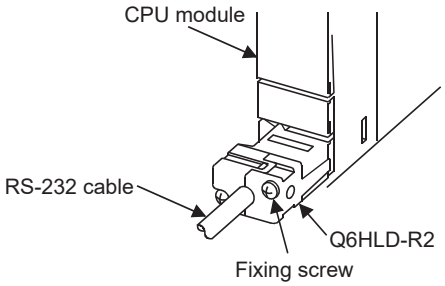

*2 Operate the RUN/STOP/RESET switch with your fingertips.
To prevent the switch from being damaged, do not use any tool such as screw driver.

(3) Q02UCPU, Q03UDCPU, Q04UDHCPU, Q06UDHCPU, Q10UDHCPU, Q13UDHCPU, Q20UDHCPU, Q26UDHCPU

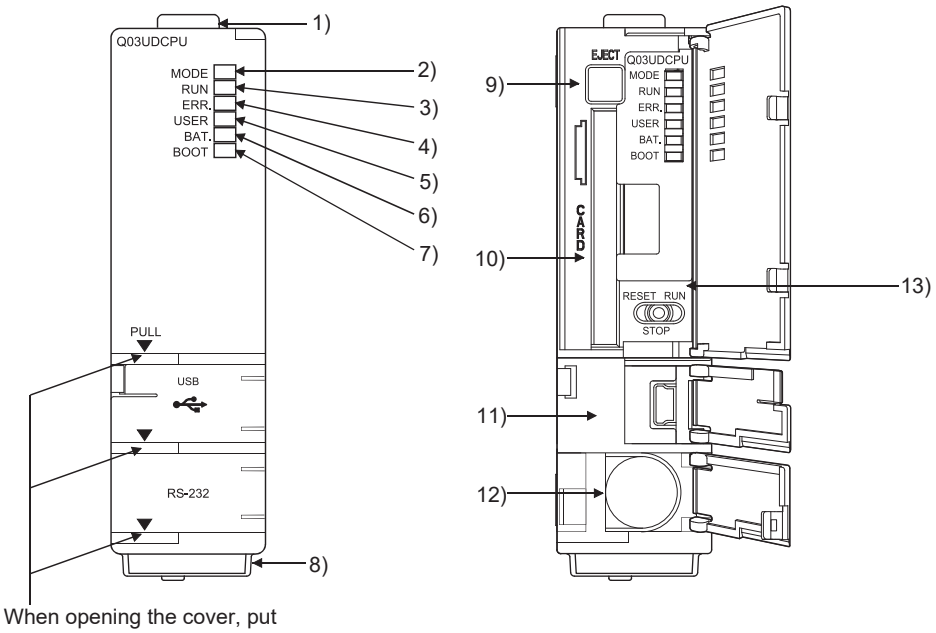

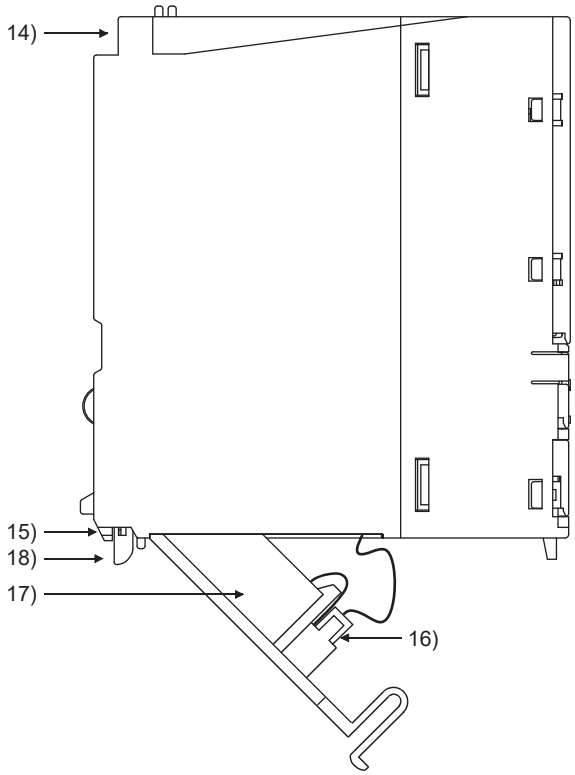

No.	Name	Application
1)	Module fixing hook	Hook used to fix the module to the base unit. (Single-motion installation)
2)	MODE LED	Indicates the mode of the CPU module. On: Q mode Flash: Executional conditioned device test is being executed. External input/output forced on/off function is being executed. CPU module change function with memory card is being executed.
3)	RUN LED	Indicates the operating status of the CPU module. On: During operation with the RUN/STOP/RESET switch set to "RUN" Off: During stop with the RUN/STOP/RESET switch set to "STOP" When an error that stops operation is detected Flash: Parameters or programs are written with the RUN/STOP/RESET switch set to "STOP", and then the RUN/STOP/RESET switch is turned from "STOP" to "RUN." To turn on the RUN LED after writing the program, perform the following operations. • Set the RUN/STOP/RESET switch in the order of "RUN" → "STOP" → "RUN". • Perform reset with the RUN/STOP/RESET switch. • Power on the programmable controller again. To turn on the RUN LED after writing the parameters, perform the following operations. • Perform reset with the RUN/STOP/RESET switch. • Power on the programmable controller again. (If the RUN/STOP/RESET switch is set in the order of "RUN" → "STOP" → "RUN" after changing the parameters, network parameters and intelligent function module parameters will not be updated.)
4)	ERR. LED	On: Detection of self-diagnosis error which will not stop operation, except battery error. (When operation continued at error detection is set in the parameter setting.) Off: Normal Flash: Detection of the error that stops operation. When reset operation becomes valid with the RUN/STOP/RESET switch.
5)	USER LED	On: Annunciator (F) turned on. Off: Normal
6)	BAT. LED	On (yellow): Battery error due to battery voltage drop of the memory card. Flash (yellow): Battery error due to voltage drop of the CPU module battery. On (green): Turned on for 5 seconds after restoring of data backed up to the standard ROM by the latch data backup is completed. Flash (green): Flashes when backup of data to the standard ROM by latch data backup is completed. Off: Normal
7)	BOOT LED	On: Start of boot operation Off: Non-execution of boot operation
8)	Serial number display	Shows the serial number printed on the rating plate.
9)	Memory card EJECT button	Used to eject the memory card from the CPU module.
10)	Memory card installing connector	Connector used for installing the memory card to the CPU module.
11)	USB connector*1	Connector for connection with USB-compatible peripheral device. (Connector type miniB) Can be connected by USB-dedicated cable.
12)	RS-232 connector*1	Connector for connecting a peripheral device by RS-232. Can be connected by RS-232 connection cable (QC30R2).
13)	RUN/STOP/RESET switch*2	RUN: Executes sequence program operation. STOP: Stops sequence program operation. RESET: Performs hardware reset, operation error reset, operation initialization or like. (☞ Page 198, Section 6.4.1)
14)	Module fixing screw hole	Hole for the screw used to secure to the base unit. (M3 × 12 screw)
15)	Module fixing projection	Projection used to secure the module to the base unit.

No.	Name	Application
16)	Battery connector pin	For connection of battery lead wires. (Lead wires are disconnected from the connector when shipping to prevent the battery from consuming.)
17)	Battery	Backup battery for use of standard RAM and backup power time function.
18)	Module mounting lever	Lever used to mount the module to the base unit.

*1 When a cable is connected to the USB connector and RS-232 connector at all times, clamp the cable to prevent a poor connection, moving, and disconnection by unintentional pulling. The Q6HLD-R2 type RS-232 connector disconnection prevention holder is available as a clamp for RS-232 connector.

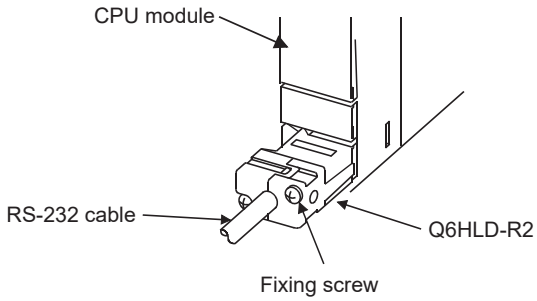

*2 Operate the RUN/STOP/RESET switch with your fingertips. To prevent the switch from being damaged, do not use any tool such as screw driver.

(4) Q03UDVCPU, Q04UDVCPU, Q04UDPVCPU, Q06UDVCPU, Q06UDPVCPU, Q13UDVCPU, Q13UDPVCPU, Q26UDVCPU, Q26UDPVCPU

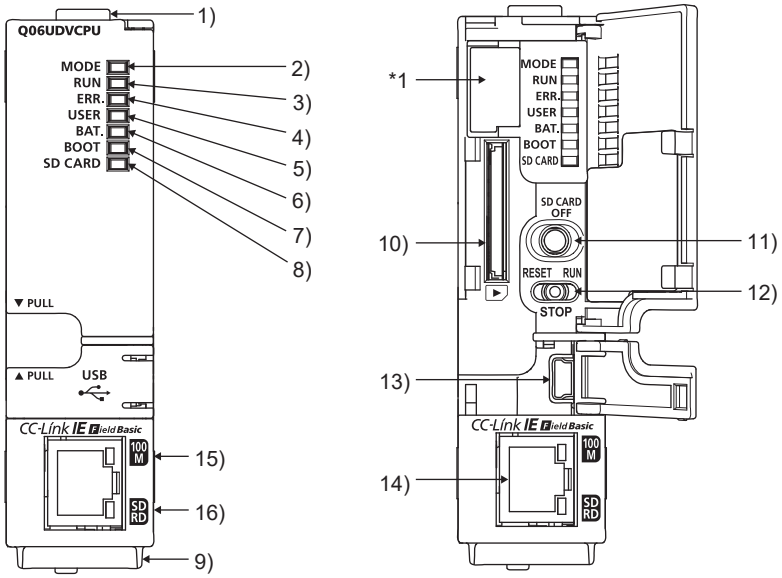

*1 Do not remove this sticker since it is for Mitsubishi maintenance.

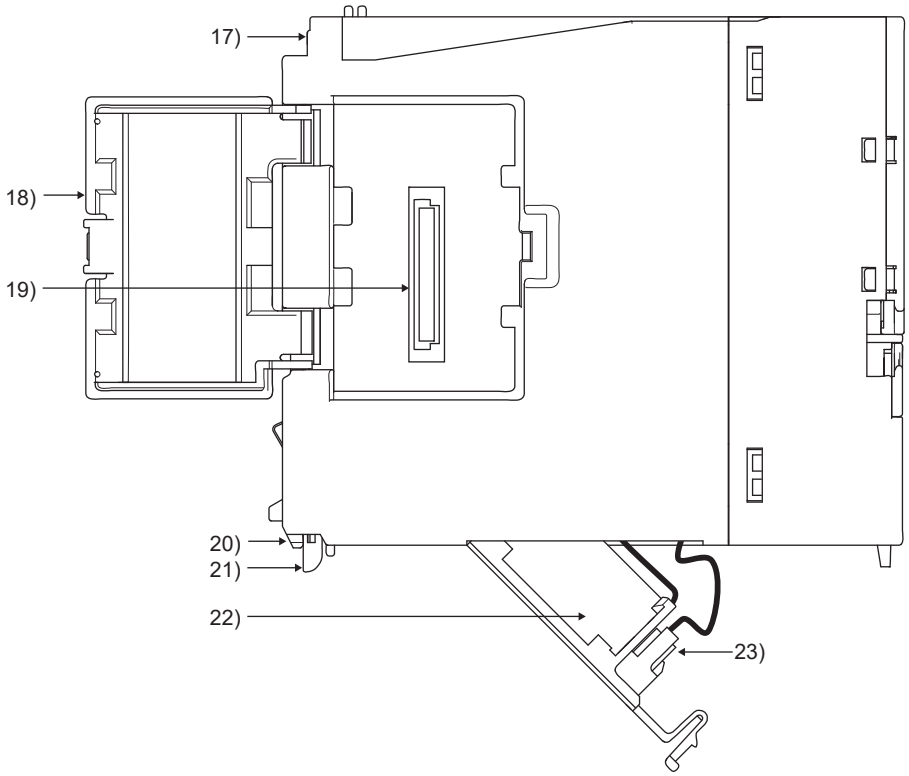

No.	Name	Application
1)	Module fixing hook	Hook used to fix the module to the base unit. (Single-motion installation)
2)	MODE LED	Indicates the mode of the CPU module. On: Q mode Flash: Executional conditioned device test is being executed. External input/output forced on/off function is being executed. CPU module change function with memory card is being executed. CPU module data backup/restoration function is being executed (Automatic restoration is being executed).
3)	RUN LED	Indicates the operating status of the CPU module. On: During operation with the RUN/STOP/RESET switch set to "RUN" Off: During stop with the RUN/STOP/RESET switch set to "STOP" When an error that stops operation is detected. Flash: Parameters or programs are written with the RUN/STOP/RESET switch set to "STOP", and then the RUN/STOP/RESET switch is turned from "STOP" to "RUN." To turn on the RUN LED after writing the program, perform the following operations. • Set the RUN/STOP/RESET switch in the order of "RUN" → "STOP" → "RUN". • Perform reset with the RUN/STOP/RESET switch. • Power on the programmable controller again. To turn on the RUN LED after writing the parameters, perform the following operations. • Perform reset with the RUN/STOP/RESET switch. • Power on the programmable controller again. (If the RUN/STOP/RESET switch is set in the order of "RUN" → "STOP" → "RUN" after changing the parameters, network parameters and intelligent function module parameters will not be updated.)
4)	ERR. LED	• On: Detection of self-diagnosis error which will not stop operation, except battery error. (When operation continued at error detection is set in the parameter setting.) • Off: Normal • Flash: Detection of the error that stops operation. When reset operation becomes valid with the RUN/STOP/RESET switch.
5)	USER LED	• On: Annunciator (F) turned on. • Off: Normal
6)	BAT. LED	Indicates the battery status and latch data backup status of the CPU module. • Flash (yellow): Battery error due to voltage drop of the CPU module battery. • On (green): Turned on for 5 seconds after restoring of data backed up to the standard ROM by the latch data backup is completed. • Flash (green): Flashes when backup of data to the standard ROM by latch data backup is completed. • Off: Normal
7)	BOOT LED	On: Start of boot operation Off: Non-execution of boot operation
8)	SD CARD LED	• On (green): An SD memory card is being used. • Flash (green): An SD memory card is being prepared or performing stop processing. Or, logging processing has completed. • Off: An SD memory card is not used.
9)	Serial number display	Shows the serial number printed on the rating plate.
10)	SD memory card slot	Slot for an SD memory card
11)	SD memory card lock switch	Switch to disable access to an SD memory card during installation or removal of the card. When the switch is pressed for over one second, the SD CARD LED flashes and then turns on, disabling access to the card. (☞Page 102, Section 4.6 (2))

No.	Name	Application
12)	RUN/STOP/RESET switch*2	• RUN: Executes sequence program operation. • STOP: Stops sequence program operation. • RESET: Performs hardware reset, operation error reset, operation initialization or like. (☞ Page 198, Section 6.4.1)
13)	USB connector*1	Connector for connection with USB-compatible peripheral device. (Connector type miniB) Can be connected by USB-dedicated cable.
14)	Ethernet connector	Connector for connecting an Ethernet device (RJ45 connector)
15)	100M LED	On: Connected at 100Mbps. Off: Connected at 10Mbps. Or disconnected.
16)	SD/RD LED	On: Data being sent/received Off: No data being sent/received
17)	Module fixing screw hole	Hole for the screw used to secure to the base unit. (M3 × 12 screw)
18)	Cassette cover	Cover for the cassette connector (☞ Page 103, Section 4.7)
19)	Cassette connector	Connector for an extended SRAM cassette (☞ Page 103, Section 4.7)
20)	Module fixing projection	Projection used to secure the module to the base unit.
21)	Module mounting lever	Lever used to mount the module to the base unit.
22)	Battery	Backup battery for the standard RAM (including an extended SRAM cassette) and the use of the backup power function
23)	Battery connector pin	For connection of battery lead wires. (Lead wires are disconnected from the connector when shipping to prevent the battery from consuming.)

*1 When a cable is connected to the USB connector at all times, clamp the cable to prevent a poor connection, moving, and disconnection by unintentional pulling.

*2 Operate the RUN/STOP/RESET switch with your fingertips. To prevent the switch from being damaged, do not use any tool such as screw driver.

(5) Q03UDECPU, Q04UDEHCPU, Q06UDEHCPU, Q10UDEHCPU, Q13UDEHCPU, Q20UDEHCPU, Q26UDEHCPU, Q50UDEHCPU, Q100UDEHCPU

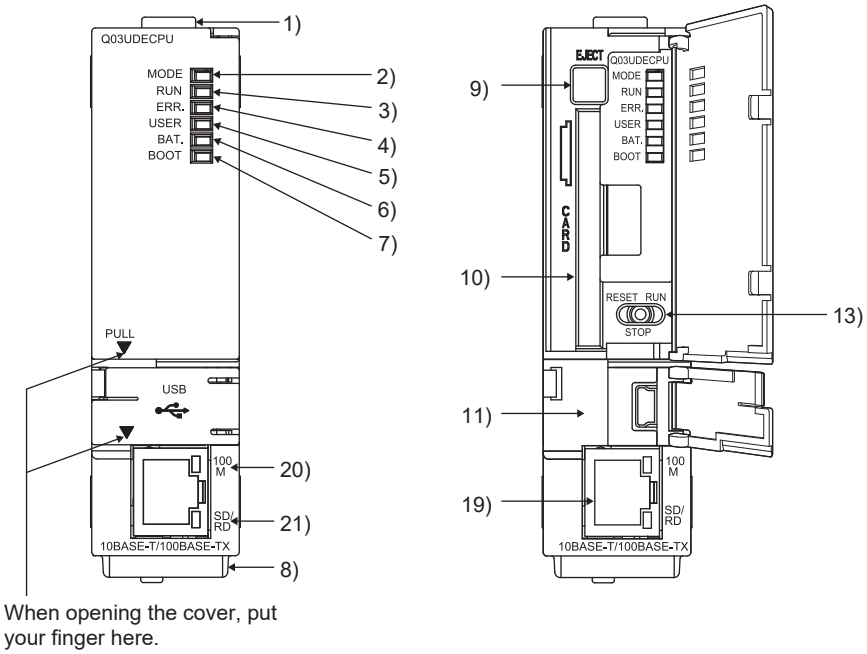

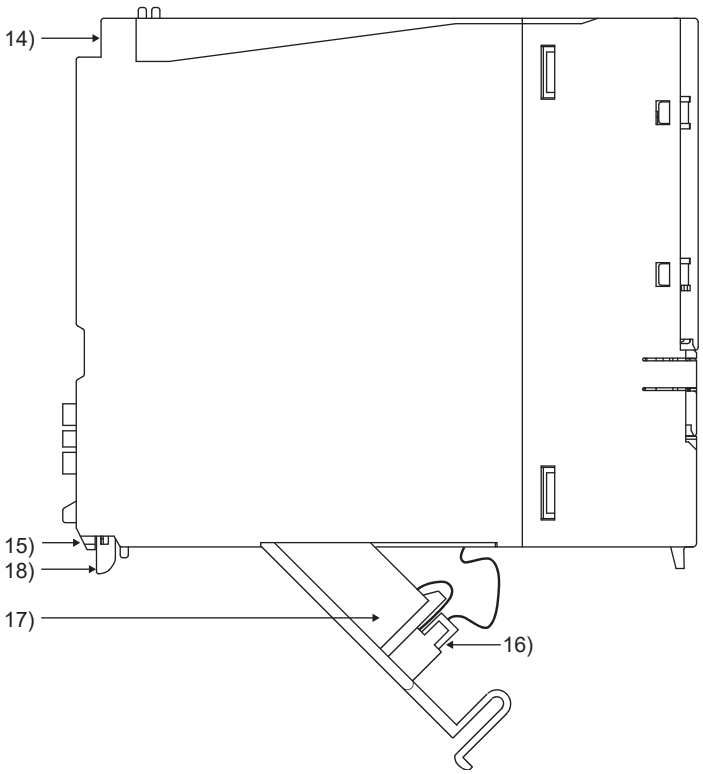

No.	Name	Application
1)	Module fixing hook	Hook used to fix the module to the base unit. (Single-motion installation)
2)	MODE LED	Indicates the mode of the CPU module. On: Q mode Flash: Executional conditioned device test is being executed. External input/output forced on/off function is being executed. CPU module change function with memory card is being executed.
3)	RUN LED	Indicates the operating status of the CPU module. On: During operation with the RUN/STOP/RESET switch set to "RUN" Off: During stop with the RUN/STOP/RESET switch set to "STOP" When an error that stops operation is detected Flash: Parameters or programs are written with the RUN/STOP/RESET switch set to "STOP", and then the RUN/STOP/RESET switch is turned from "STOP" to "RUN." To turn on the RUN LED after writing the program, perform the following operations. • Set the RUN/STOP/RESET switch in the order of "RUN" → "STOP" → "RUN". • Perform reset with the RUN/STOP/RESET switch. • Power on the programmable controller again. To turn on the RUN LED after writing the parameters, perform the following operations. • Perform reset with the RUN/STOP/RESET switch. • Power on the programmable controller again. (If the RUN/STOP/RESET switch is set in the order of "RUN" → "STOP" → "RUN" after changing the parameters, network parameters and intelligent function module parameters will not be updated.)
4)	ERR. LED	On: Detection of self-diagnosis error which will not stop operation, except battery error. (When operation continued at error detection is set in the parameter setting.) Off: Normal Flash: Detection of the error that stops operation. When reset operation becomes valid with the RUN/STOP/RESET switch.
5)	USER LED	On: Annunciator (F) turned on Off: Normal
6)	BAT. LED	On (yellow):Battery error due to battery voltage drop of the memory card. Flash (yellow):Battery error due to voltage drop of the CPU module battery. On (green): Turned on for 5 seconds after restoring of data backed up to the standard ROM by the latch data backup is completed. Flash (green): Flashes when backup of data to the standard ROM by latch data backup is completed. Off: Normal
7)	BOOT LED	On: Start of boot operation Off: Non-execution of boot operation
8)	Serial number display	Shows the serial number printed on the rating plate.
9)	Memory card EJECT button	Used to eject the memory card from the CPU module.
10)	Memory card installing connector	Connector used for installing the memory card to the CPU module.
11)	USB connector*1	Connector for connection with USB-compatible peripheral device. (Connector type miniB) Can be connected by USB-dedicated cable.
12)	RS-232 connector*1	Connector for connecting a peripheral device by RS-232. Can be connected by RS-232 connection cable (QC30R2).

No.	Name	Application
13)	RUN/STOP/RESET switch*2	RUN: Executes sequence program operation. STOP: Stops sequence program operation. RESET: Performs hardware reset, operation error reset, operation initialization or like. (☞ Page 198, Section 6.4.1)
14)	Module fixing screw hole	Hole for the screw used to secure to the base unit. (M3 × 12 screw)
15)	Module fixing projection	Projection used to secure the module to the base unit.
16)	Battery connector pin	For connection of battery lead wires. (Lead wires are disconnected from the connector when shipping to prevent the battery from consuming.)
17)	Battery	Backup battery for use of standard RAM and backup power time function.
18)	Module mounting lever	Lever used to mount the module to the base unit.
19)	Ethernet connector	Connector for connecting an Ethernet device (RJ45 connector)
20)	100M LED	On: Connected at 100Mbps. Off: Connected at 10Mbps. Or disconnected.
21)	SD/RD LED	On: Data being sent/received Off: No data being sent/received

*1 When a cable is connected to the USB connector at all times, clamp the cable to prevent a poor connection, moving, and disconnection by unintentional pulling.

*2 Operate the RUN/STOP/RESET switch with your fingertips. To prevent the switch from being damaged, do not use any tool such as screw driver.

6.2 Specifications

The following table lists performance specifications of CPU modules.

6.2.1 Basic model QCPU

Item		Basic model QCPU		
		Q00JCPU	Q00CPU	Q01CPU
Control method		Stored program cyclic operation		
I/O control mode		Refresh mode (Direct access I/O is available by specifying direct access I/O (DX□, DY□).)		
Program language	Sequence control language	Relay symbol language, logic symbolic language, MELSAP3 (SFC), MELSAP-L, function block, and structured text (ST)		
	Process control language	----		
Processing speed (sequence instruction)	LD X0	200ns	160ns	100ns
	MOV D0 D1	700ns	560ns	350ns
Processing speed (redundant function)	Tracking execution time (increased scan time)	----		
Constant scan (Function for keeping regular scan time)		1 to 2000ms (Setting available in 1ms unit.) (Setting by parameters.)		
Program size*1*2		8K steps (32K bytes)		14K steps (56K bytes)
Memory size*1	Program memory (drive 0)	58K bytes	94K bytes	
	Memory card (RAM) (drive 1)	----		
	Memory card (ROM) (drive 2)	----		
	Standard RAM (drive 3)	0	128K bytes*3	
	Standard ROM (drive 4)	58K bytes	94K bytes	
	CPU shared memory *3*4	----	1K byte	

*1 The size unit of the files stored in the memory area differs depending on the CPU module. For details, refer to the following.

Qn(H)/QnPH/QnPRHCPU User's Manual (Function Explanation, Program Fundamentals)

*2 The maximum number of executable sequence steps is obtained by the following formula.
(Program size) - (File header size (Default: 34 steps))
For details of the program size and files, refer to the following.

Qn(H)/QnPH/QnPRHCPU User's Manual (Function Explanation, Program Fundamentals)

*3 The size has been increased by the function upgrade of the CPU module. (Page 658, Appendix 6)

*4 Data in the CPU shared memory is not latched.
Data in the CPU shared memory is cleared when the programmable controller is powered on or the CPU module is reset.

QCPU User's Manual (Multiple CPU System)

Item			Basic model QCPU		
			Q00JCPU	Q00CPU	Q01CPU
Max. number of files stored	Program memory		6[*5]		
	Memory card (RAM)		----		
	Memory card (ROM)	Flash card	----		
		ATA card	----		
	Standard RAM		----	1	
	Standard ROM		6[*5]		
Maximum number of intelligent function module parameters		Initial setting	512		
		Refresh	256		
No. of times of writing data into the standard ROM			Max. 100000 times		
No. of I/O device points (No. of points usable on program)			2048 points (X/Y0 to 7FF)		
No. of I/O points (No. of points accessible to the actual I/O module)			256 points (X/Y0 to FF)	1024 points (X/Y0 to 3FF)	
No. of device points	Internal relay [M][*6]		8192 points by default (M0 to 8191) (changeable)		
	Latch relay [L][*6]		2048 points by default (L0 to 2047) (changeable)		
	Link relay [B][*6]		2048 points by default (B0 to 7FF) (changeable)		
	Timer [T][*6]		512 points by default (T0 to 511) (Sharing of low- and high-speed timers) (changeable) The low- and high-speed timers are specified by the instructions. The measurement unit of the low- and high-speed timers is set up by parameters. (Low-speed timer: 1 to 1000ms, 1ms unit, 100ms by default) (High-speed timer: 0.1 to 100.0ms, 0.1ms unit, 10.0ms by default)		
	Retentive timer [ST][*6]		0 point by default (sharing of the low- and high-speed retentive timers) (changeable) The low- and high-speed retentive timers are specified by the instructions. The measurement unit of the low- and high-speed retentive timers is set up by parameters. (Low-speed retentive timer: 1 to 1000ms, 1ms unit, 100ms by default) (High-speed retentive timer: 0.1 to 100.0ms, 0.1ms unit, 10.0ms by default)		
	Counter [C][*6]		Normal counter: 512 points by default (C0 to 511) (changeable) Interrupt counter: 128 points max. (0 points by default, setting by parameters)		
	Data register [D][*6]		11136 points by default (D0 to 11135) (changeable)		
	Link register [W][*6]		2048 points by default (W0 to 7FF) (changeable)		
	Annunciator [F][*6]		1024 points by default (F0 to 1023) (changeable)		
	Edge relay [V][*6]		1024 points by default (V0 to 1023) (changeable)		
	File register	[R],[ZR]	----	R: The following number of device points can be used by switching blocks (in increments of 32768 points (R0 to 32767)). ZR: The following number of device points can be used without switching blocks.	
		Standard RAM	----	65536 points (The number of device points is fixed.)	
	Link special relay [SB]		1024 points (SB0 to 3FF) (The number of device points is fixed.)		
	Link special register [SW]		1024 points (SW0 to 3FF) (The number of device points is fixed.)		

Item		Basic model QCPU		
		Q00JCPU	Q00CPU	Q01CPU
No. of device points	Step relay [S]*7	2048 points (S0 to 127/block) (The number of device points is fixed.)		
	Index register [Z]	10 points (Z0 to 9) (The number of device points is fixed.)		
	Pointer [P]	300 points (P0 to 299) (The number of device points is fixed.)		
	Interrupt pointer [I]	128 points (I0 to 127) (The number of device points is fixed.) The cyclic interval of system interrupt pointers I28 to 31 can be set up by parameters. (2 to 1000ms, 1ms unit) Default values I28: 100ms, I29: 40ms, I30: 20ms, I31: 10ms		
	Special relay [SM]	1024 points (SM0 to 1023) (The number of device points is fixed.)		
	Special register [SD]	1024 points (SD0 to 1023) (The number of device points is fixed.)		
	Function input [FX]	16 points (FX0 to F) (The number of device points is fixed.)		
	Function output [FY]	16 points (FY0 to F) (The number of device points is fixed.)		
	Function register [FD]	5 points (FD0 to 4) (The number of device points is fixed.)		
No. of device tracking words		----		
Link direct device		Device for accessing the link device of a network module directly Specified form: J□□\X□□, J□□\Y□□, J□□\W□□, J□□\B□□, J□□\SW□□, J□□\SB□□		
Intelligent function module device		Device for accessing the buffer memory of the intelligent function module directly. Specified form: U□□\G□□		
Latch range		L0 to 2047 (default) (Latch range can be set up for B, F, V, T, ST, C, D, and W.) (Setting by parameters.)		
RUN/PAUSE contact		One contact can be set up in X0 to 7FF for each of RUN and PAUSE. (Setting by parameters.)		
Clock function		Year, month, date, hour, minute, second and day of the week (Automatic leap year detection) Accuracy: -3.2 to +5.27s(TYP.+1.98s)/d at 0°C Accuracy: -2.57 to +5.27s(TYP.+2.22s)/d at 25°C Accuracy: -11.68 to +3.65s(TYP.-2.64s)/d at 55°C		
Allowable momentary power failure time		20ms or less (100VAC or more)	Varies depending on the power supply module.	
5VDC internal current consumption		0.26A*8	0.25A	0.27A
External dimensions	H	98mm	98mm	
	W	244.4mm*9	27.4mm	
	D		89.3mm	
Weight		0.66kg*9	0.13kg	

*5 Each of parameter, intelligent function module parameter, sequence program, SFC program, device comment, and initial device value files can be stored.

*6 The number of points can be changed within the setting range.
(Qn(H)/QnPH/QnPRHCPU User's Manual (Function Explanation, Program Fundamentals)

*7 The step relay is a device for the SFC function.

*8 The value is for the CPU module and base unit together.

*9 The value includes the CPU module, base unit, and power supply module.

Remark

For the general specifications, refer to Page 119, CHAPTER 5.

6.2.2 High Performance model QCPU

Item		High Performance model QCPU				
		Q02CPU	Q02HCPU	Q06HCPU	Q12HCPU	Q25HCPU
Control method		Stored program cyclic operation				
I/O control mode		Refresh mode (Direct access I/O is available by specifying direct access I/O (DX□, DY□).)				
Program language	Sequence control language	Relay symbol language, logic symbolic language, MELSAP3 (SFC), MELSAP-L, function block, and structured text (ST)				
	Process control language	----				
Processing speed (sequence instruction)	LD X0	79ns	34ns			
	MOV D0 D1	237ns	102ns			
Processing speed (redundant function)	Tracking execution time (increased scan time)	----				
Constant scan (Function for keeping regular scan time)		0.5 to 2000ms (Setting available in 0.5ms unit.) (Setting by parameters.)				
Program size*1*2		28K steps (112K bytes)		60K steps (240K bytes)	124K steps (496K bytes)	252K steps (1008K bytes)
Memory size*1	Program memory (drive 0)	112K bytes		240K bytes	496K bytes	1008K bytes
	Memory card (RAM) (drive 1)	Size of the installed memory card (4M bytes max.)*11				
	Memory card (ROM) (drive 2)	Size of the installed memory card (Flash card: 4M bytes max., ATA card: 32M bytes max.)				
	Standard RAM (drive 3)	64K bytes	128K bytes*3		256K bytes*3	
	Standard ROM (drive 4)	112K bytes		240K bytes	496K bytes	1008K bytes
	CPU shared memory*3*4	8K bytes				

*1 The size unit of the files stored in the memory area differs depending on the CPU module. For details, refer to the following.

Qn(H)/QnPH/QnPRHCPU User's Manual (Function Explanation, Program Fundamentals)

*2 The maximum number of executable sequence steps is obtained by the following formula.
(Program size) - (File header size (Default: 34 steps))
For details of the program size and files, refer to the following.

Qn(H)/QnPH/QnPRHCPU User's Manual (Function Explanation, Program Fundamentals)

*3 The size has been increased by the function upgrade of the CPU module. (Page 658, Appendix 6)

*4 Data in the CPU shared memory is not latched.
Data in the CPU shared memory is cleared when the programmable controller is powered on or the CPU module is reset.

QCPU User's Manual (Multiple CPU System)

*11 For the CPU module whose serial number (first five digits) is "16020" or earlier, the maximum memory card size is 2M bytes.

Item			High Performance model QCPU				
			Q02CPU	Q02HCPU	Q06HCPU	Q12HCPU	Q25HCPU
Max. number of files stored	Program memory		28		60	124	252*5
	Memory card (RAM)		319 (When the Q3MEM-4MBS is used)*12				
	Memory card (ROM)	Flash card	288				
		ATA card	512				
	Standard RAM		3*6				
	Standard ROM		28		60	124	252
Max. number of intelligent function module parameters		Initial setting	512				
		Refresh	256				
No. of times of writing data into the standard ROM			Max. 100000 times				
No. of I/O device points (No. of points usable on program)			8192 points (X/Y0 to 1FFF)				
No. of I/O points (No. of points accessible to the actual I/O module)			4096 points (X/Y0 to FFF)				
No. of device points*7	Internal relay [M]		8192 points by default (M0 to 8191) (changeable)				
	Latch relay [L]		8192 points by default (L0 to 8191) (changeable)				
	Link relay [B]		8192 points by default (B0 to 1FFF) (changeable)				
	Timer [T]		2048 points by default (T0 to 2047) (sharing of low- and high-speed timers) (changeable) The low- and high-speed timers are specified by the instructions. The measurement unit of the low- and high-speed timers is set up by parameters. (Low-speed timer: 1 to 1000ms, 1ms unit, 100ms by default) (High-speed timer: 0.1 to 100.0ms, 0.1ms unit, 10.0ms by default)				
	Retentive timer [ST]		0 point by default (sharing of the low- and high-speed retentive timers) (changeable) The low- and high-speed retentive timers are specified by the instructions. The measurement unit of the low- and high-speed retentive timers is set up by parameters. (Low-speed retentive timer: 1 to 1000ms, 1ms unit, 100ms by default) (High-speed retentive timer: 0.1 to 100.0ms, 0.1ms unit, 10.0ms by default)				
	Counter [C]		Normal counter, 1024 points by default (C0 to 1023) (changeable) Interrupt counter: 256 points max. (0 point by default, setting by parameters)				
	Data register [D]		12288 points by default (D0 to 12287) (changeable)				
	Link register [W]		8192 points by default (W0 to 1FFF) (changeable)				
	Annunciator [F]		2048 points by default (F0 to 2047) (changeable)				
	Edge relay [V]		2048 points by default (V0 to 2047) (changeable)				

*5 The CPU module can execute up to 124 programs. Any program exceeding 124 cannot be executed.

*6 The number has been increased by the function upgrade of the CPU module.
(Qn(H)/QnPH/QnPRHCPU User's Manual (Function Explanation, Program Fundamentals))

*7 The number of points can be changed within the setting range.
(Qn(H)/QnPH/QnPRHCPU User's Manual (Function Explanation, Program Fundamentals)

*12 When the Q2MEM-2MBS is used, the maximum number of files stored is 287 for the CPU module whose serial number (first five digits) is "16020" or earlier.

Item				High Performance model QCPU				
				Q02CPU	Q02HCPU	Q06HCPU	Q12HCPU	Q25HCPU
No. of device points	File register*8	[R], [ZR]		R: The following number of device points can be used by switching blocks (in increments of 32768 points (R0 to 32767)). ZR: The following number of device points can be used without switching blocks.				
			Standard RAM	32768 points	65536 points		131072 points	
			SRAM card (1M byte)	517120 points				
			SRAM card (2M bytes)	1041408 points				
			SRAM card (4M bytes)*13	1042432 points				
			Flash card (2M bytes)	1041408 points				
			Flash card (4M bytes)	1042432 points				
	Link special relay [SB]			2048 points (SB0 to 7FF) (The number of device points is fixed.)				
	Link special register [SW]			2048 points (SW0 to 7FF) (The number of device points is fixed.)				
	Step relay [S]*9			8192 points (S0 to 8191) (The number of device points is fixed.)				
	Index register [Z]			16 points (Z0 to 15) (The number of device points is fixed.)				
	Pointer [P]			4096 points (P0 to 4095) (The number of device points is fixed.), The use ranges of the local pointers and common pointers can be set up by parameters.				
	Interrupt pointer [I]			256 points (I0 to 255) (The number of device points is fixed.) The constant cyclic interval of system interrupt pointers I28 to 31 and I49 can be set up by parameters. (I28 to 31: 0.5 to 1000ms, in 0.5ms unit, I49: 0.2 to 1.0ms, in 0.1ms unit) Default values I28: 100ms, I29: 40ms, I30: 20ms, I31: 10ms, I49: Blank				
	Special relay [SM]			2048 points (SM0 to 2047) (The number of device points is fixed.)				
	Special register [SD]			2048 points (SD0 to 2047) (The number of device points is fixed.)				
	Function input [FX]			16 points (FX0 to F) (The number of device points is fixed.)				
	Function output [FY]			16 points (FY0 to F) (The number of device points is fixed.)				
	Function register [FD]			5 points (FD0 to 4) (The number of device points is fixed.)				
No. of device tracking words				----				
Link direct device				Device for accessing the link device of a network module directly Specified form: J□□\X□□, J□□\Y□□, J□□\W□□, J□□\B□□, J□□\SW□□, J□□\SB□□				
Intelligent function module device				Device for accessing the buffer memory of the intelligent function module directly. Specified form: U□□\G□□				

*8 When a Flash card is used, only reading is possible. ATA cards cannot be used.

*9 The step relay is a device for the SFC function.

*13 The card can be used for the CPU module whose serial number (first five digits) is "16021" or later.

Item		High Performance model QCPU				
		Q02CPU	Q02HCPU	Q06HCPU	Q12HCPU	Q25HCPU
Latch range		L0 to 8191 (default) (Latch range can be set up for B, F, V, T, ST, C, D, and W.) (Setting by parameters.)				
RUN/PAUSE contact		One contact can be set up in X0 to 1FFF for each of RUN and PAUSE. (Setting by parameters.)				
Clock function		Year, month, date, hour, minute, second, and day of the week (Automatic leap year detection) Accuracy: -3.18 to +5.25s(TYP.+2.12s)/d at 0°C Accuracy: -3.93 to +5.25s(TYP.+1.90s)/d at 25°C Accuracy: -14.69 to +3.53s(TYP.-3.67s)/d at 55°C				
Allowable momentary power failure time		Varies depending on the power supply module.				
5VDC internal current consumption		0.60A	0.64A			
External dimensions	H	98mm				
	W	27.4mm				
	D	89.3mm				
Weight		0.20kg				

Remark

For the general specifications, refer to Page 119, CHAPTER 5.

6.2.3 Process CPU

Item		Process CPU			
		Q02PHCPU	Q06PHCPU	Q12PHCPU	Q25PHCPU
Control method		Stored program cyclic operation			
I/O control mode		Refresh mode (Direct access I/O is available by specifying direct access I/O (DX□, DY□).)			
Program language	Sequence control language	Relay symbol language, logic symbolic language, MELSAP3 (SFC), MELSAP-L, function block and structured text (ST)			
	Process control language	FBD for process control (Programming by PX Developer)			
Processing speed (sequence instruction)	LD X0	34ns			
	MOV D0 D1	102ns			
Processing speed (redundant function)	Tracking execution time (increased scan time)	----			
Constant scan (Function for keeping regular scan time)		0.5 to 2000ms (Setting available in 0.5ms unit.) (Setting by parameters)			
Program size*1*2		28K steps (112 bytes)	60K steps (240 bytes)	124K steps (496 bytes)	252K steps (1008 bytes)
Memory size*1	Program memory (drive 0)	112K bytes	240K bytes	496K bytes	1008K bytes
	Memory card (RAM) (drive 1)	Size of the installed memory card (4M bytes max.)*10			
	Memory card (ROM) (drive 2)	Size of the installed memory card (Flash card: 4M bytes max., ATA card: 32M bytes max.)			
	Standard RAM (drive 3)	128K bytes		256K bytes	
	Standard ROM (drive 4)	112K bytes	240K bytes	496K bytes	1008K bytes
	CPU shared memory*3	8K bytes			

*1 The size unit of the files stored in the memory area differs depending on the CPU module. For details, refer to the following.

Qn(H)/QnPH/QnPRHCPU User's Manual (Function Explanation, Program Fundamentals)

*2 The maximum number of executable sequence steps is obtained by the following formula.
(Program size) - (File header size (Default: 34 steps))
For details of the program size and files, refer to the following.

Qn(H)/QnPH/QnPRHCPU User's Manual (Function Explanation, Program Fundamentals)

*3 Data in the CPU shared memory is not latched.
Data in the CPU shared memory is cleared when the programmable controller is powered on or the CPU module is reset.

QCPU User's Manual (Multiple CPU System)

*10 For the CPU module whose serial number (first five digits) is "16020" or earlier, the maximum memory card size is 2M bytes.

Item			Process CPU			
			Q02PHCPU	Q06PHCPU	Q12PHCPU	Q25PHCPU
Max. number of files stored	Program memory		28	60	124	252*4
	Memory card (RAM)		319 (When the Q3MEM-4MBS is used)*11			
	Memory card (ROM)	Flash card	288			
		ATA card	512			
	Standard RAM		3*5			
	Standard ROM		28	60	124	252
Max. number of intelligent function module parameters		Initial setting	512			
		Refresh	256			
No. of times of writing data into the standard ROM			Max. 100000 times			
No. of I/O device points (No. of points usable on program)			8192 points (X/Y0 to 1FFF)			
No. of I/O points (No. of points accessible to the actual I/O module)			4096 points (X/Y0 to FFF)			
No. of device points*6	Internal relay [M]		8192 points by default (M0 to 8191) (changeable)			
	Latch relay [L]		8192 points by default (L0 to 8191) (changeable)			
	Link relay [B]		8192 points by default (B0 to 1FFF) (changeable)			
	Timer [T]		2048 points by default (T0 to 2047) (sharing of low- and high-speed timers) (changeable) The low- and high-speed timers are specified by the instructions. The measurement unit of the low- and high-speed timers is set up by parameters. (Low-speed timer: 1 to 1000ms, 1ms unit, 100ms by default) (High-speed timer: 0.1 to 100.0ms, 0.1ms unit, 10.0ms by default)			
	Retentive timer [ST]		0 point by default (sharing of low- and high-speed retentive timers) (changeable) The low- and high-speed retentive timers are specified by the instructions. The measurement unit of the low- and high-speed retentive timers is set up by parameters. (Low-speed retentive timer: 1 to 1000ms, 1ms unit, 100ms by default) (High-speed retentive timer: 0.1 to 100.0ms, 0.1ms unit, 10.0ms by default)			
	Counter [C]		Normal counter, 1024 points by default (C0 to 1023) (changeable) Interrupt counter: 256 points max. (0 points by default, setting by parameters)			
	Data register [D]		12288 points by default (D0 to 12287) (changeable)			
	Link register [W]		8192 points by default (W0 to 1FFF) (changeable)			
	Annunciator [F]		2048 points by default (F0 to 2047) (changeable)			
	Edge relay [V]		2048 points by default (V0 to 2047) (changeable)			

*4 The CPU module can execute up to 124 programs. Any program exceeding 124 cannot be executed.

*5 The number has been increased by the function upgrade of the CPU module.
(Qn(H)/QnPH/QnPRHCPU User's Manual (Function Explanation, Program Fundamentals))

*6 The number of points can be changed within the setting range.
(Qn(H)/QnPH/QnPRHCPU User's Manual (Function Explanation, Program Fundamentals))

*11 When the Q2MEM-2MBS is used, the maximum number of files stored is 287 for the CPU module whose serial number (first five digits) is "16020" or earlier.

Item				Process CPU			
				Q02PHCPU	Q06PHCPU	Q12PHCPU	Q25PHCPU
No. of device points	File register[*7]	[R], [ZR]		R: The following number of device points can be used by switching blocks (in increments of 32768 points (R0 to 32767)). ZR: The following number of device points can be used without switching blocks.			
			Standard RAM	65536 points		131072 points	
			SRAM card (1M byte)	517120 points			
			SRAM card (2M bytes)	1041408 points			
			SRAM card (4M bytes)[*12]	1042432 points			
			SRAM card (2M bytes)	1041408 points			
			Flash card (2M bytes)	1041408 points			
			Flash card (4M bytes)	1042432 points			
	Link special relay [SB]			2048 points (SB0 to 7FF) (The number of device points is fixed.)			
	Link special register [SW]			2048 points (SW0 to 7FF) (The number of device points is fixed.)			
	Step relay [S][*8]			8192 points (S0 to 8191) (The number of device points is fixed.)			
	Index register [Z]			16 points (Z0 to 15) (The number of device points is fixed.)			
	Pointer [P]			4096 points (P0 to 4095) (The number of device points is fixed.), The use ranges of the local pointers and common pointers can be set up by parameters.			
	Interrupt pointer [I]			256 points (I0 to 255) (The number of device points is fixed.) The constant cyclic interval of system interrupt pointers I28 to 31 can be set up by parameters. (0.5 to 1000ms, 0.5ms unit) Default values I28: 100ms, I29: 40ms, I30: 20ms, I31: 10ms			
	Special relay [SM]			2048 points (SM0 to 2047) (The number of device points is fixed.)			
	Special register [SD]			2048 points (SD0 to 2047) (The number of device points is fixed.)			
	Function input [FX]			16 points (FX0 to F) (The number of device points is fixed.)			
	Function output [FY]			16 points (FY0 to F) (The number of device points is fixed.)			
	Function register [FD]			5 points (FD0 to 4) (The number of device points is fixed.)			
No. of device tracking words				----			
Link direct device				Device for accessing the link device of a network module directly Specified form: J□□\X□□, J□□\Y□□, J□□\W□□, J□□\B□□, J□□\SW□□, J□□\SB□□			
Intelligent function module device				Device for accessing the buffer memory of the intelligent function module directly. Specified form: U□□\G□□			

*7 When a Flash card is used, only reading is possible. ATA cards cannot be used.

*8 The step relay is a device for the SFC function.

*12 The card can be used for the CPU module whose serial number (first five digits) is "16021" or later.

Item		Process CPU			
		Q02PHCPU	Q06PHCPU	Q12PHCPU	Q25PHCPU
Latch range		L0 to 8191 (default) (Latch range can be set up for B, F, V, T, ST, C, D, and W.) (Setting by parameters)			
RUN/PAUSE contact		One contact can be set up in X0 to 1FFF for each of RUN and PAUSE. (Setting by parameters)			
Clock function		Year, month, date, hour, minute, second, and day of the week (Automatic leap year detection) Accuracy: -3.18 to +5.25s(TYP.+2.12s)/d at 0°C Accuracy: -3.93 to +5.25s(TYP.+1.90s)/d at 25°C Accuracy: -14.69 to +3.53s(TYP.-3.67s)/d at 55°C			
Allowable momentary power failure time		Varies depending on the power supply module.			
5VDC internal current consumption		0.64A			
External dimensions	H	98mm			
	W	27.4mm			
	D	89.3mm			
Weight		0.20kg			

Remark

For the general specifications, refer to Page 119, CHAPTER 5.

6.2.4 Redundant CPU

Item		Redundant CPU	
		Q12PRHCPU	Q25PRHCPU
Control method		Stored program cyclic operation	
I/O control mode		Refresh mode (Direct access I/O is available by specifying direct access I/O (DX□, DY□).)	
Program language	Sequence control language	Relay symbol language, logic symbolic language, MELSAP3 (SFC), MELSAP-L, function block and structured text (ST)	
	Process control language	FBD for process control (Programming by PX Developer)	
Processing speed (sequence instruction)	LD X0	34ns	
	MOV D0 D1	102ns	
Processing speed (redundant function)	Tracking execution time (increased scan time)	Device memory 48k words: 10ms Device memory 100k words: 15ms (QnPRHCPU User's Manual (Redundant System))	
Constant scan (Function for keeping regular scan time)		0.5 to 2000ms (Setting available in 0.5ms unit) (Setting by parameters)	
Program size*1*2		124K steps (496 bytes)	252K steps (1008 bytes)
Memory size*1	Program memory (drive 0)	496K bytes	1008K bytes
	Memory card (RAM) (drive 1)	Size of the installed memory card (4M bytes max.)*9	
	Memory card (ROM) (drive 2)	Size of the installed memory card (Flash card: 4M bytes max., ATA card: 32M bytes max.)	
	Standard RAM (drive 3)	256K bytes	
	Standard ROM (drive 4)	496K bytes	1008K bytes
	CPU shared memory	----	

*1 The size unit of the files stored in the memory area differs depending on the CPU module. For details, refer to the following.

Qn(H)/QnPH/QnPRHCPU User's Manual (Function Explanation, Program Fundamentals)

*2 The maximum number of executable sequence steps is obtained by the following formula.
(Program size) - (File header size (Default: 34 steps))
For details of the program size and files, refer to the following.

Qn(H)/QnPH/QnPRHCPU User's Manual (Function Explanation, Program Fundamentals)

*9 For the CPU module whose serial number (first five digits) is "16020" or earlier, the maximum memory card size is 2M bytes.

Item			Redundant CPU	
			Q12PRHCPU	Q25PRHCPU
Max. number of files stored	Program memory		124	252*3
	Memory card (RAM)		319 (When the Q3MEM-4MBS is used)*10	
	Memory card (ROM)	Flash card	288	
		ATA card	512	
	Standard RAM		3*4	
	Standard ROM		124	252
Max. number of intelligent function module parameters		Initial setting	512	
		Refresh	256	
No. of times of writing data into the standard ROM			Max. 100000 times	
No. of I/O device points (No. of points usable on program)			8192 points (X/Y0 to 1FFF)	
No. of I/O points (No. of points accessible to the actual I/O module)			4096 points (X/Y0 to FFF)	
No. of device points*5	Internal relay [M]		8192 points by default (M0 to 8191) (changeable)	
	Latch relay [L]		8192 points by default (L0 to 8191) (changeable)	
	Link relay [B]		8192 points by default (B0 to 1FFF) (changeable)	
	Timer [T]		2048 points by default (T0 to 2047) (sharing of low- and high-speed timers) (changeable) The low- and high-speed timers are specified by the instructions. The measurement unit of the low- and high-speed timers is set up by parameters. (Low-speed timer: 1 to 1000ms, 1ms unit, 100ms by default) (High-speed timer: 0.1 to 100.0ms, 0.1ms unit, 10.0ms by default)	
	Retentive timer [ST]		0 point by default (sharing of low- and high-speed retentive timers) (changeable) The low- and high-speed retentive timers are specified by the instructions. The measurement unit of the low- and high-speed retentive timers is set up by parameters. (Low-speed retentive timer: 1 to 1000ms, 1ms unit, 100ms by default) (High-speed retentive timer: 0.1 to 100.0ms, 0.1ms unit, 10.0ms by default)	
	Counter [C]		Normal counter, 1024 points by default (C0 to 1023) (changeable) Interrupt counter: 256 points max. (0 points by default, setting by parameters)	
	Data register [D]		12288 points by default (D0 to 12287) (changeable)	
	Link register [W]		8192 points by default (W0 to 1FFF) (changeable)	
	Annunciator [F]		2048 points by default (F0 to 2047) (changeable)	
	Edge relay [V]		2048 points by default (V0 to 2047) (changeable)	

*3 The CPU module can execute up to 124 programs. Any program exceeding 124 cannot be executed.

*4 The number has been increased by the function upgrade of the CPU module.
(Qn(H)/QnPH/QnPRHCPU User's Manual (Function Explanation, Program Fundamentals))

*5 The number of points can be changed within the setting range.
(Qn(H)/QnPH/QnPRHCPU User's Manual (Function Explanation, Program Fundamentals))

*10 When the Q2MEM-2MBS is used, the maximum number of files stored is 287 for the CPU module whose serial number (first five digits) is "16020" or earlier.

Item				Redundant CPU	
				Q12PRHCPU	Q25PRHCPU
No. of device points	File register[*6]	[R], [ZR]		R: The following number of device points can be used by switching blocks (in increments of 32768 points (R0 to 32767)). ZR: The following number of device points can be used without switching blocks.	
			Standard RAM	131072 points	
			SRAM card (1M byte)	517120 points	
			SRAM card (2M bytes)	1041408 points	
			SRAM card (4M bytes)[*11]	1042432 points	
			Flash card (2M bytes)	1041408 points	
			Flash card (4M bytes)	1042432 points	
	Link special relay [SB]			2048 points (SB0 to 7FF) (The number of device points is fixed.)	
	Link special register [SW]			2048 points (SW0 to 7FF) (The number of device points is fixed.)	
	Step relay [S][*7]			8192 points (S0 to 8191) (The number of device points is fixed.)	
	Index register [Z]			16 points (Z0 to 15) (The number of device points is fixed.)	
	Pointer [P]			4096 points (P0 to 4095) (The number of device points is fixed.), The use ranges of the local pointers and common pointers can be set up by parameters.	
	Interrupt pointer [I]			256 points (I0 to 255) (The number of device points is fixed.) The constant cyclic interval of system interrupt pointers I28 to 31 can be set up by parameters. (0.5 to 1000ms, 0.5ms unit) Default values I28: 100ms, I29: 40ms, I30: 20ms, I31: 10ms	
	Special relay [SM]			2048 points (SM0 to 2047) (The number of device points is fixed.)	
	Special register [SD]			2048 points (SD0 to 2047) (The number of device points is fixed.)	
	Function input [FX]			16 points (FX0 to F) (The number of device points is fixed.)	
	Function output [FY]			16 points (FY0 to F) (The number of device points is fixed.)	
	Function register [FD]			5 points (FD0 to 4) (The number of device points is fixed.)	
No. of device tracking words				Max. 100k words (QnPRHCPU User's Manual (Redundant System))	
Link direct device				Device for accessing the link device of a network module directly Specified form: J□□\X□□, J□□\Y□□, J□□\W□□, J□□\B□□, J□□\SW□□, J□□\SB□□	
Intelligent function module device				Device for accessing the buffer memory of the intelligent function module directly Specified form: U□□\G□□	

*6 When a Flash card is used, only reading is possible. ATA cards cannot be used.
*7 The step relay is a device for the SFC function.
*11 The card can be used for the CPU module whose serial number (first five digits) is "16021" or later.

Item		Redundant CPU	
		Q12PRHCPU	Q25PRHCPU
Latch range		L0 to 8191 (default) (Setting by parameters) (Latch range can be set up for B, F, V, T, ST, C, D, and W.)	
RUN/PAUSE contact		One contact can be set up in X0 to 1FFF for each of RUN and PAUSE. (Setting by parameters)	
Clock function		Year, month, date, hour, minute, second, and day of the week (Automatic leap year detection) Accuracy: -3.2 to +5.27s (TYP.+2.07s)/d at 0°C Accuracy: -2.77 to +5.27s (TYP.+2.22s)/d at 25°C Accuracy: -12.14 to +3.65s (TYP.-2.89s)/d at 55°C	
Allowable momentary power failure time		Varies depending on the power supply module.	
5VDC internal current consumption		0.89A	
External dimensions	H	98mm	
	W	55.2mm	
	D	89.3mm	
Weight		0.30kg	

Remark

For the general specifications, refer to Page 119, CHAPTER 5.

6.2.5 Universal model QCPU

(1) Q00UJCPU, Q00UCPU, Q01UCPU, Q02UCPU

<table>
<tr><th colspan="3" rowspan="2">Item</th><th colspan="4">Universal model QCPU</th></tr>
<tr><th>Q00UJCPU</th><th>Q00UCPU</th><th>Q01UCPU</th><th>Q02UCPU</th></tr>
<tr><td colspan="3">Control method</td><td colspan="4">Stored program cyclic operation</td></tr>
<tr><td colspan="3">I/O control mode</td><td colspan="4">Refresh mode
(Direct access I/O is available by specifying direct access I/O (DX□, DY□).)</td></tr>
<tr><td rowspan="2">Program language</td><td colspan="2">Sequence control language</td><td colspan="4">Relay symbol language, logic symbolic language, MELSAP3 (SFC),
MELSAP-L, function block and structured text (ST)</td></tr>
<tr><td colspan="2">Process control language</td><td colspan="4">----</td></tr>
<tr><td rowspan="2">Processing speed (sequence instruction)</td><td colspan="2">LD X0</td><td>120ns</td><td>80ns</td><td>60ns</td><td>40ns</td></tr>
<tr><td colspan="2">MOV D0 D1</td><td>240ns</td><td>160ns</td><td>120ns</td><td>80ns</td></tr>
<tr><td>Processing speed (redundant function)</td><td colspan="2">Tracking execution time (increased scan time)</td><td colspan="4">----</td></tr>
<tr><td colspan="3">Constant scan
(Function for keeping regular scan time)</td><td colspan="4">0.5 to 2000ms
(Setting available in 0.5ms unit) (Setting by parameters)</td></tr>
<tr><td colspan="3">Program size*1*2</td><td colspan="2">10K steps
(40K bytes)</td><td>15K steps
(60K bytes)</td><td>20K steps
(80K bytes)</td></tr>
<tr><td rowspan="6">Memory size*1</td><td colspan="2">Program memory (drive 0)</td><td colspan="2">40K bytes</td><td>60K bytes</td><td>80K bytes</td></tr>
<tr><td colspan="2">Memory card (RAM) (drive 1)</td><td colspan="3">----</td><td>Size of the installed memory card
(8M bytes max.)</td></tr>
<tr><td colspan="2">Memory card (ROM) (drive 2)</td><td colspan="3">----</td><td>Size of the installed memory card
(Flash card:
4M bytes max.,
ATA card:
32M bytes max.)</td></tr>
<tr><td colspan="2">Standard RAM (drive 3)</td><td>----</td><td colspan="3">128K bytes</td></tr>
<tr><td colspan="2">Standard ROM (drive 4)</td><td>256K bytes</td><td colspan="3">512K bytes</td></tr>
<tr><td rowspan="2">CPU shared memory*3</td><td>----</td><td colspan="3">8K bytes</td></tr>
<tr><td>Multiple CPU high speed transmission area</td><td colspan="4">----</td></tr>
</table>

*1 The size unit of the files stored in the memory area differs depending on the CPU module.
For details, refer to the following.

QnUCPU User's Manual (Function Explanation, Program Fundamentals)

*2 The maximum number of executable sequence steps is obtained by the following formula.
(Program size) - (File header size (Default: 34 steps))
For details of the program size and files, refer to the following.

QnUCPU User's Manual (Function Explanation, Program Fundamentals)

*3 Data in the CPU shared memory is not latched.
Data in the CPU shared memory is cleared when the programmable controller is powered on or the CPU module is reset.

QCPU User's Manual (Multiple CPU System)

Item			Universal model QCPU			
			Q00UJCPU	Q00UCPU	Q01UCPU	Q02UCPU
Max. number of files stored	Program memory		32[*7]			64[*7]
	Memory card (RAM)		----			319 (When the Q3MEM-8MBS is used)
	Memory card (ROM)	Flash card	----			288
		ATA card	----			511
	Standard RAM		----	4 files (each one of the following files: file register file, local device file, sampling trace file, and module error collection file)		
	Standard ROM		128			
Max. number of intelligent function module parameters		Initial setting	512			2048
		Refresh	256			1024
No. of times of writing data into the program memory			Max. 100000 times[*4]			
No. of times of writing data into the standard ROM			Max. 100000 times[*5]			
No. of I/O device points (No. of points usable on program)			8192 points (X/Y0 to 1FFF)			
No. of I/O points (No. of points accessible to the actual I/O module)			256 points (X/Y0 to FF)	1024 points (X/Y0 to 3FF)		2048 points (X/Y0 to 7FF)
No. of device points	Internal relay [M][*6]		8192 points by default (M0 to 8191) (changeable)			
	Latch relay [L][*6]		8192 points by default (L0 to 8191) (changeable)			
	Link relay [B][*6]		8192 points by default (B0 to 1FFF) (changeable)			
	Timer [T][*6]		2048 points by default (T0 to 2047) (changeable) (Sharing of low- and high-speed timers) The low- and high-speed timers are specified by the instructions. The measurement unit of the low- and high-speed timers is set up by parameters. (Low-speed timer: 1 to 1000ms, 1ms unit, 100ms by default) (High-speed timer: 0.01 to 100ms, 0.01ms unit, 10.00ms by default)			
	Retentive timer [ST][*6]		0 points by default (sharing of the low- and high-speed retentive timers) (changeable) The low- and high-speed retentive timers are specified by the instructions. The measurement unit of the low- and high-speed retentive timers is set up by parameters. (Low-speed retentive timer: 1 to 1000ms, 1ms unit, 100ms by default) (High-speed retentive timer: 0.01 to 100ms, 0.01ms unit, 10.00ms by default)			
	Counter [C][*6]		Normal counter, 1024 points by default (C0 to 1023) (changeable)			
	Data register [D][*6]		12288 points by default (D0 to 12287) (changeable)			
	Extended data register [D]		----	0 points by default (changeable)		
	Link register [W][*6]		8192 points by default (W0 to 1FFF) (changeable)			
	Extended link register [W]		----	0 points by default (changeable)		
	Annunciator [F][*6]		2048 points by default (F0 to 2047) (changeable)			
	Edge relay [V][*6]		2048 points by default (V0 to 2047) (changeable)			
	Link special relay [SB][*6]		2048 points by default (SB0 to 7FF) (changeable)			
	Link special register [SW][*6]		2048 points by default (SW0 to 7FF) (changeable)			

*4 A single write operation may not be counted as one.
The count of writing into the program memory can be checked with the special register (SD682 and SD683).

*5 A single write operation may not be counted as one.
The count of writing into the standard ROM can be checked with the special register (SD687 and SD688).

*6 The number of points can be changed within the setting range. (QnUCPU User's Manual (Function Explanation, Program Fundamentals))

*7 The number of executable programs differs depending on the CPU module.
- Q00UJCPU, Q00UCPU, Q01UCPU: up to 32 programs
- Q02UCPU: up to 64 programs

Item				Universal model QCPU			
				Q00UJCPU	Q00UCPU	Q01UCPU	Q02UCPU
No. of device points	File register*8	[R], [ZR]		----	R: The following number of device points can be used by switching blocks (in increments of 32768 points (R0 to 32767)). ZR: The following number of device points can be used without switching blocks.		
			Standard RAM	----	65536 points		
			SRAM card (1M byte)	----			517120 points
			SRAM card (2M bytes)	----			1041408 points
			SRAM card (4M bytes)	----			2087936 points
			SRAM card (8M bytes)	----			4184064 points
			Flash card (2M bytes)	----			1041408 points
			Flash card (4M bytes)	----			2087936 points
	Step relay [S]*9			8192 points (S0 to 8191) (The number of device points is fixed.)*10*15			
	Index register / Standard device register [Z]			max. 20 points (Z0 to 19)			
	Index register [Z] (32-bit modification specification of ZR device)			----	max. 10 points (Z0 to 18) (Index register (Z) is used in double words.)		
	Pointer [P]			512 points (P0 to 511), The use ranges of the local pointers and common pointers can be set up by parameters.			4096 points (P0 to 4095), The use ranges of the local pointers and common pointers can be set up by parameters.
	Interrupt pointer [I]			128 points (I0 to 127) The constant cyclic interval of system interrupt pointers I28 to 31 can be set up by parameters. (0.5 to 1000ms, 0.5ms unit) Default values I28: 100ms, I29: 40ms, I30: 20ms, I31: 10ms			256 points (I0 to 255) The constant cyclic interval of system interrupt pointers I28 to 31 can be set up by parameters. (0.5 to 1000ms, 0.5ms unit) Default values I28: 100ms, I29: 40ms, I30: 20ms, I31: 10ms
	Special relay [SM]			2048 points (SM0 to 2047) (The number of device points is fixed.)			
	Special register [SD]			2048 points (SD0 to 2047) (The number of device points is fixed.)			
	Function input [FX]			16 points (FX0 to F) (The number of device points is fixed.)			
	Function output [FY]			16 points (FY0 to F) (The number of device points is fixed.)			
	Function register [FD]			5 points (FD0 to 4) (The number of device points is fixed.)			
No. of device tracking words				----			
Link direct device				Device for accessing the link device of a network module directly Specified form: J□□\X□□, J□□\Y□□, J□□\W□□, J□□\B□□, J□□\SW□□, J□□\SB□□			
Intelligent function module device				Device for accessing the buffer memory of the intelligent function module directly Specified form: U□□\G□□			

*8 When a Flash card is used, only reading is possible. ATA cards cannot be used.

*9 The step relay is a device for the SFC function.

*10 For the Universal model QCPU whose serial number (first five digits) is "10042" or later, the number of device points can be changed to zero.

*15 For the Universal model QCPU whose serial number (first five digits) is "12052" or later, a step relay can be set in increments of 1k point and up to 8192 points. (☞ Page 668, Appendix 6.6)

Item			Universal model QCPU			
			Q00UJCPU	Q00UCPU	Q01UCPU	Q02UCPU
Specifications of built-in Ethernet port CPU module*11	Data transmission speed		----			
	Communication mode		----			
	Transmission method		----			
	Max. distance between hub and node		----			
	Max. number of connectable nodes	10BASE-T	----			
		100BASE-TX	----			
	Number of connections*12		----			
Latch range			L0 to 8191 (8192 points by default) (Latch range can be set up for B, F, V, T, ST, C, D, and W.) (Setting by parameters)			
RUN/PAUSE contact			One contact can be set up in X0 to 1FFF for each of RUN and PAUSE. (Setting by parameters)			
Clock function			Year, month, date, hour, minute, second, and day of the week (Automatic leap year detection) Accuracy: -3.67 to +4.62s (TYP.+1.24s)/d at 0°C Accuracy: -3.08 to +4.62s (TYP.+1.63s)/d at 25°C Accuracy: -11.79 to +2.88s (TYP.-3.03s)/d at 55°C			Year, month, date, hour, minute, second, and day of the week (Automatic leap year detection) Accuracy: -2.96 to +3.74s (TYP.+1.42s)/d at 0°C Accuracy: -3.18 to +3.74s (TYP.+1.50s)/d at 25°C Accuracy: -13.20 to +2.12s (TYP.-3.54s)/d at 55°C
Allowable momentary power failure time			20ms or less (100VAC or more)	Varies depending on the power supply module.		
5VDC internal current consumption			0.37A*13	0.33A		0.23A
External dimensions		H	98mm	98mm		
		W	244.4mm*14	27.4mm		
		D	98mm	89.3mm		
Weight			0.70kg*14	0.15kg		0.20kg

*11 For the Built-in Ethernet port QCPU
*12 The number is a total of TCP/IP and UDP/IP.
*13 The value is for the CPU module and base unit together.
*14 The value includes the CPU module, power supply module, and base unit.

Remark

For the general specifications, refer to Page 119, CHAPTER 5.

(2) Q03UDCPU, Q04UDHCPU, Q06UDHCPU

Item			Universal model QCPU		
			Q03UDCPU	Q04UDHCPU	Q06UDHCPU
Control method			Stored program cyclic operation		
I/O control mode			Refresh mode (Direct access I/O is available by specifying direct access I/O (DX□, DY□).)		
Program language	Sequence control language		Relay symbol language, logic symbolic language, MELSAP3 (SFC), MELSAP-L, function block and structured text (ST)		
	Process control language		----		
Processing speed (sequence instruction)	LD X0		20ns	9.5ns	
	MOV D0 D1		40ns	19ns	
Processing speed (redundant function)	Tracking execution time (increased scan time)		----		
Constant scan (Function for keeping regular scan time)			0.5 to 2000ms (Setting available in 0.5ms unit) (Setting by parameters)		
Program size*1*2			30K steps (120K bytes)	40K steps (160K bytes)	60K steps (240K bytes)
Memory size*1	Program memory (drive 0)		120K bytes	160K bytes	240K bytes
	Memory card (RAM) (drive 1)		Size of the installed memory card (8M bytes max.)		
	Memory card (ROM) (drive 2)		Size of the installed memory card (Flash card: 4M bytes max., ATA card: 32M bytes max.)		
	Standard RAM (drive 3)		192K bytes	256K bytes	768K bytes
	Standard ROM (drive 4)		1024K steps		
	CPU shared memory*3		8K bytes		
		Multiple CPU high speed transmission area	32K bytes		

*1 The size unit of the files stored in the memory area differs depending on the CPU modules. For details on the file size unit, refer to the following manual.

QnUCPU User's Manual (Function Explanation, Program Fundamentals)

*2 The maximum number of executable sequence steps is obtained by the following formula.
(Program size) - (File header size (Default: 34 steps))
For details on the program size and files, refer to the following manual.

QnUCPU User's Manual (Function Explanation, Program Fundamentals)

*3 Data in the CPU shared memory is not latched.
Data in the CPU shared memory is cleared when the programmable controller is powered off and on or the CPU module is reset.

QCPU User's Manual (Multiple CPU System)

Item			Universal model QCPU		
			Q03UDCPU	Q04UDHCPU	Q06UDHCPU
Max. number of files stored	Program memory		124*4		
	Memory card (RAM)		319 (When the Q3MEM-8MBS is used)		
	Memory card (ROM)	Flash card	288		
		ATA card	511		
	Standard RAM		4 files (each one of the following files: file register file, local device file, sampling trace file, and module error collection file)		
	Standard ROM		256		
Max. number of intelligent function module parameters		Initial setting	4096		
		Refresh	2048		
No. of times of writing data into the program memory			Max. 100000 times*5		
No. of times of writing data into the standard ROM			Max. 100000 times*6		
No. of I/O device points (No. of points usable on program)			8192 points (X/Y0 to 1FFF)		
No. of I/O points (No. of points accessible to the actual I/O module)			4096 points (X/Y0 to FFF)		
No. of device points	Internal relay [M]*7		8192 points by default (M0 to 8191) (changeable)		
	Latch relay [L]*7		8192 points by default (L0 to 8191) (changeable)		
	Link relay [B]*7		8192 points by default (B0 to 1FFF) (changeable)		
	Timer [T]*7		2048 points by default (T0 to 2047) (changeable) (Sharing of low- and high-speed timers) The low- and high-speed timers are specified by the instructions. The measurement unit of the low- and high-speed timers is set up by parameters. (Low-speed timer: 1 to 1000ms, 1ms unit, 100ms by default) (High-speed timer: 0.01 to 100ms, 0.01ms unit, 10.00ms by default)		
	Retentive timer [ST]*7		0 points by default (sharing of the low- and high-speed retentive timers) (changeable) The low- and high-speed retentive timers are specified by the instructions. The measurement unit of the low- and high-speed retentive timers is set up by parameters. (Low-speed retentive timer: 1 to 1000ms, 1ms unit, 100ms by default) (High-speed retentive timer: 0.01 to 100ms, 0.01ms unit, 10.00ms by default)		
	Counter [C]*7		Normal counter, 1024 points by default (C0 to 1023) (changeable)		
	Data register [D]*7		12288 points by default (D0 to 12287) (changeable)		
	Extended data register [D]		0 points by default (changeable)		
	Link register [W]*7		8192 points by default (W0 to 1FFF) (changeable)		
	Extended link register [W]		0 points by default (changeable)		
	Annunciator [F]*7		2048 points by default (F0 to 2047) (changeable)		
	Edge relay [V]*7		2048 points by default (V0 to 2047) (changeable)		

*4 The number of executable programs differs depending on the CPU modules.
• Q03UDCPU, Q04UDHCPU, Q06UDHCPU: up to 124 programs

*5 A single write operation may not be counted as one.
The number of writes to program memory can be checked with the special register (SD682 or SD683).

*6 A single write operation may not be counted as one.
The number of writes to standard ROM can be checked with the special register (SD687 or SD688).

*7 The number of points can be changed within the setting range. (QnUCPU User's Manual (Function Explanation, Program Fundamentals))

Item				Universal model QCPU		
				Q03UDCPU	Q04UDHCPU	Q06UDHCPU
No. of device points	Link special relay [SB]*8			2048 points by default (SB0 to 7FF) (changeable)		
	Link special register [SW]*8			2048 points by default (SW0 to 7FF) (changeable)		
	File register*9	[R], [ZR]		R: The following number of device points can be used by switching blocks (in increments of 32768 points (R0 to 32767)). ZR: The following number of device points can be used without switching blocks.		
			Standard RAM	98304 points	131072 points	393216 points
			SRAM card (1M byte)	517120 points		
			SRAM card (2M bytes)	1041408 points		
			SRAM card (4M bytes)	2087936 points		
			SRAM card (8M bytes)	4184064 points		
			Flash card (2M bytes)	1041408 points		
			Flash card (4M bytes)	2087936 points		
	Step relay [S]*10			8192 points (S0 to 8191) (The number of device points is fixed.)*11*12		
	Index register/ Standard device register [Z]			Max. 20 points (Z0 to 19)		
	Index register [Z] (32-bit modification specification of ZR device)			Max. 10 points (Z0 to 18) (Index register (Z) is used in double words.)		
	Pointer [P]			4096 points (P0 to 4095), The use ranges of the local pointers and common pointers can be set by parameters.		
	Interrupt pointer [I]			256 points (I0 to 255) The constant cyclic interval of system interrupt pointers I28 to 31 can be set up by parameters. (0.5 to 1000ms, 0.5ms unit) Default values I28: 100ms, I29: 40ms, I30: 20ms, I31: 10ms		
	Special relay [SM]			2048 points (SM0 to 2047) (The number of device points is fixed.)		
	Special register [SD]			2048 points (SD0 to 2047) (The number of device points is fixed.)		
	Function input [FX]			16 points (FX0 to F) (The number of device points is fixed.)		
	Function output [FY]			16 points (FY0 to F) (The number of device points is fixed.)		
	Function register [FD]			5 points (FD0 to 4) (The number of device points is fixed.)		

*8 The number of points can be changed within the setting range. (QnUCPU User's Manual (Functional Explanation/Program Basics))

*9 When a Flash card is used, only reading is possible. ATA cards cannot be used.

*10 The step relay is a device for the SFC function.

*11 The number of device points can be changed to 0K points for the universal model QCPU with serial number "10042" or later (first five digits).

*12 The step relay can be set maximum of 16384 points in increments of 1K for the universal model QCPU with serial number "12052" or later (first five digits). (Page 658, Appendix 6)

Item			Universal model QCPU		
			Q03UDCPU	Q04UDHCPU	Q06UDHCPU
No. of device tracking words			----		
Link direct device			Device for accessing the link device of a network module directly Specified form: J□□\X□□, J□□\Y□□, J□□\W□□, J□□\B□□, J□□\SW□□, J□□\SB□□		
Intelligent function module device			Device for accessing the buffer memory of the intelligent function module directly Specified form: U□□\G□□		
Specifications of Ethernet port built in the CPU module*13	Data transmission speed		100/10Mbps		
	Communication mode		Full-duplex/Half-duplex		
	Transmission method		Base band		
	Max. distance between hub and node		100m		
	Max. number of connectable nodes	10BASE-T	Maximum number of cascade connections: four levels*15		
		100BASE-TX	Maximum number of cascade connections: two levels*15		
	Number of connections*14		16 for a total of socket communication, MELSOFT connection, and MC protocol and 1 for FTP		
Latch range			L0 to 8191 (8192 points by default) (Latch range can be set for B, F, V, T, ST, C, D, and W.) (Setting by parameters)		
RUN/PAUSE contact			One contact can be set up in X0 to 1FFF for each of RUN and PAUSE. (Setting by parameters)		
Clock function			Year, month, date, hour, minute, second, and day of the week (Automatic leap year detection) Accuracy: -2.96 to +3.74s (TYP.+1.42s)/d at 0°C Accuracy: -3.18 to +3.74s (TYP.+1.50s)/d at 25°C Accuracy: -13.20 to +2.12s (TYP.-3.54s)/d at 55°C		
Allowable momentary power failure time			Varies depending on the power supply module.		
5VDC internal current consumption			0.33A	0.39A	
External dimensions		H	98mm		
		W	27.4mm		
		D	89.3mm		
Weight			0.20kg		

*13 For the Built-in Ethernet port QCPU

*14 The number is a total of TCP/IP and UDP/IP.

*15 This is the number of connectable levels when a repeater hub is used. For the number of connectable levels when a switching hub is used, contact the manufacturer of the switching hub used.

Remark

For the general specifications, refer to Page 119, CHAPTER 5.

(3) Q10UDHCPU, Q13UDHCPU, Q20UDHCPU, Q26UDHCPU

Item			Universal model QCPU			
			Q10UDHCPU	Q13UDHCPU	Q20UDHCPU	Q26UDHCPU
Control method			Stored program cyclic operation			
I/O control mode			Refresh mode (Direct access I/O is available by specifying direct access I/O (DX□, DY□).)			
Program language	Sequence control language		Relay symbol language, logic symbolic language, MELSAP3 (SFC), MELSAP-L, function block and structured text (ST)			
	Process control language		----			
Processing speed (sequence instruction)	LD X0		9.5ns			
	MOV D0 D1		19ns			
Processing speed (redundant function)	Tracking execution time (increased scan time)		----			
Constant scan (Function for keeping regular scan time)			0.5 to 2000ms (Setting available in 0.5ms unit) (Setting by parameters)			
Program size*1*2			100K steps (400K bytes)	130K steps (520K bytes)	200K steps (800K bytes)	260K steps (1040K bytes)
Memory size*1	Program memory (drive 0)		400K bytes	520K bytes	800K bytes	1040K bytes
	Memory card (RAM) (drive 1)		Size of the installed memory card (8M bytes max.)			
	Memory card (ROM) (drive 2)		Size of the installed memory card (Flash card: 4M bytes max., ATA card: 32M bytes max.)			
	Standard RAM (drive 3)		1024K bytes		1280K bytes	
	Standard ROM (drive 4)		2048K bytes		4096K bytes	
	CPU shared memory*3		8K bytes			
		Multiple CPU high speed transmission area	32K bytes			

*1 The size unit of the files stored in the memory area differs depending on the CPU modules. For details on the file size unit, refer to the following manual.

QnUCPU User's Manual (Function Explanation, Program Fundamentals)

*2 The maximum number of executable sequence steps is obtained by the following formula.
(Program size) - (File header size (Default: 34 steps))
For details on the program size and files, refer to the following manual.

QnUCPU User's Manual (Function Explanation, Program Fundamentals)

*3 Data in the CPU shared memory is not latched.
Data in the CPU shared memory is cleared when the programmable controller is powered off and on or the CPU module is reset.

QCPU User's Manual (Multiple CPU System)

Item			Universal model QCPU			
			Q10UDHCPU	Q13UDHCPU	Q20UDHCPU	Q26UDHCPU
Max. number of files stored	Program memory		252[*4]			
	Memory card (RAM)		319 (When the Q3MEM-8MBS is used)			
	Memory card (ROM)	Flash card	288			
		ATA card	511			
	Standard RAM		4 files (each one of the following files: file register file, local device file, sampling trace file, and module error collection file)			
	Standard ROM		256			
Max. number of intelligent function module parameters		Initial setting	4096			
		Refresh	2048			
No. of times of writing data into the program memory			Max. 100000 times[*5]			
No. of times of writing data into the standard ROM			Max. 100000 times[*6]			
No. of I/O device points (No. of points usable on program)			8192 points (X/Y0 to 1FFF)			
No. of I/O points (No. of points accessible to the actual I/O module)			4096 points (X/Y0 to FFF)			
No. of device points	Internal relay [M][*7]		8192 points by default (M0 to 8191) (changeable)			
	Latch relay [L][*7]		8192 points by default (L0 to 8191) (changeable)			
	Link relay [B][*7]		8192 points by default (B0 to 1FFF) (changeable)			
	Timer [T][*7]		2048 points by default (T0 to 2047) (changeable) (Sharing of low- and high-speed timers) The low- and high-speed timers are specified by the instructions. The measurement unit of the low- and high-speed timers is set up by parameters. (Low-speed timer: 1 to 1000ms, 1ms unit, 100ms by default) (High-speed timer: 0.01 to 100ms, 0.01ms unit, 10.00ms by default)			
	Retentive timer [ST][*7]		0 points by default (sharing of the low- and high-speed retentive timers) (changeable) The low- and high-speed retentive timers are specified by the instructions. The measurement unit of the low- and high-speed retentive timers is set up by parameters. (Low-speed retentive timer: 1 to 1000ms, 1ms unit, 100ms by default) (High-speed retentive timer: 0.01 to 100ms, 0.01ms unit, 10.00ms by default)			
	Counter [C][*7]		Normal counter, 1024 points by default (C0 to 1023) (changeable)			
	Data register [D][*7]		12288 points by default (D0 to 12287) (changeable)			
	Extended data register [D]		0 points by default (changeable)			
	Link register [W][*7]		8192 points by default (W0 to 1FFF) (changeable)			
	Extended link register [W]		0 points by default (changeable)			
	Annunciator [F][*7]		2048 points by default (F0 to 2047) (changeable)			
	Edge relay [V][*7]		2048 points by default (V0 to 2047) (changeable)			

*4 The number of executable programs differs depending on the CPU modules.
• Q10UDHCPU, Q13UDHCPU, Q20UDHCPU, Q26UDHCPU: up to 124 programs (125 or more programs cannot be executed.))

*5 A single write operation may not be counted as one.
The number of writes to program memory can be checked with the special register (SD682 or SD683).

*6 A single write operation may not be counted as one.
The number of writes to standard ROM can be checked with the special register (SD687 or SD688).

*7 The number of points can be changed within the setting range. (QnUCPU User's Manual (Function Explanation, Program Fundamentals))

Item				Universal model QCPU			
				Q10UDHCPU	Q13UDHCPU	Q20UDHCPU	Q26UDHCPU
No. of device points	Link special relay [SB]*8			2048 points by default (SB0 to 7FF) (changeable)			
	Link special register [SW]*8			2048 points by default (SW0 to 7FF) (changeable)			
	File register*9	[R], [ZR]		R: The following number of device points can be used by switching blocks (in increments of 32768 points (R0 to 32767)). ZR: The following number of device points can be used without switching blocks.			
			Standard RAM	524288 points		655360 points	
			SRAM card (1M byte)	517120 points			
			SRAM card (2M bytes)	1041408 points			
			SRAM card (4M bytes)	2087936 points			
			SRAM card (8M bytes)	4184064 points			
			Flash card (2M bytes)	1041408 points			
			Flash card (4M bytes)	2087936 points			
	Step relay [S]*10			8192 points (S0 to 8191) (The number of device points is fixed.)*11*12			
	Index register/ Standard device register [Z]			Max. 20 points (Z0 to 19)			
	Index register [Z] (32-bit modification specification of ZR device)			Max. 10 points (Z0 to 18) (Index register (Z) is used in double words.)			
	Pointer [P]			4096 points (P0 to 4095), The use ranges of the local pointers and common pointers can be set by parameters.			
	Interrupt pointer [I]			256 points (I0 to 255) The constant cyclic interval of system interrupt pointers I28 to 31 can be set up by parameters. (0.5 to 1000ms, 0.5ms unit) Default values I28: 100ms, I29: 40ms, I30: 20ms, I31: 10ms			
	Special relay [SM]			2048 points (SM0 to 2047) (The number of device points is fixed.)			
	Special register [SD]			2048 points (SD0 to 2047) (The number of device points is fixed.)			
	Function input [FX]			16 points (FX0 to F) (The number of device points is fixed.)			
	Function output [FY]			16 points (FY0 to F) (The number of device points is fixed.)			
	Function register [FD]			5 points (FD0 to 4) (The number of device points is fixed.)			

*8 The number of points can be changed within the setting range. (QnUCPU User's Manual (Functional Explanation/Program Basics))

*9 When a Flash card is used, only reading is possible. ATA cards cannot be used.

*10 The step relay is a device for the SFC function.

*11 The number of device points can be changed to 0K points for the universal model QCPU with serial number "10042" or later (first five digits).

*12 The step relay can be set maximum of 16384 points in increments of 1K for the universal model QCPU with serial number "12052" or later (first five digits). (Page 658, Appendix 6)

Item			Universal model QCPU			
			Q10UDHCPU	Q13UDHCPU	Q20UDHCPU	Q26UDHCPU
No. of device tracking words			----			
Link direct device			Device for accessing the link device of a network module directly Specified form: J□□\X□□, J□□\Y□□, J□□\W□□, J□□\B□□, J□□\SW□□, J□□\SB□□			
Intelligent function module device			Device for accessing the buffer memory of the intelligent function module directly Specified form: U□□\G□□			
Specifications of Ethernet port built in the CPU module*13	Data transmission speed		100/10Mbps			
	Communication mode		Full-duplex/Half-duplex			
	Transmission method		Base band			
	Max. distance between hub and node		100m			
	Max. number of connectable nodes	10BASE-T	Maximum number of cascade connections: four levels*15			
		100BASE-TX	Maximum number of cascade connections: two levels*15			
	Number of connections*14		16 for a total of socket communication, MELSOFT connection, and MC protocol and 1 for FTP			
Latch range			L0 to 8191 (8192 points by default) (Latch range can be set for B, F, V, T, ST, C, D, and W.) (Setting by parameters)			
RUN/PAUSE contact			One contact can be set up in X0 to 1FFF for each of RUN and PAUSE. (Setting by parameters)			
Clock function			Year, month, date, hour, minute, second, and day of the week (Automatic leap year detection) Accuracy: -3.67 to +4.62s (TYP.+1.42s)/d at 0°C Accuracy: -3.88 to +4.62s (TYP.+1.50s)/d at 25°C Accuracy: -13.42 to +2.88s (TYP.+3.54s)/d at 55°C			
Allowable momentary power failure time			Varies depending on the power supply module.			
5VDC internal current consumption			0.39A			
External dimensions		H	98mm			
		W	27.4mm			
		D	89.3mm			
Weight			0.20kg			

*13 For the Built-in Ethernet port QCPU

*14 The number is a total of TCP/IP and UDP/IP.

*15 This is the number of connectable levels when a repeater hub is used. For the number of connectable levels when a switching hub is used, contact the manufacturer of the switching hub used.

Remark

For the general specifications, refer to Page 119, CHAPTER 5.

(4) Q03UDECPU, Q04UDEHCPU, Q06UDEHCPU, Q10UDEHCPU, Q13UDEHCPU

Item			Universal model QCPU				
			Q03UDECPU	Q04UDEHCPU	Q06UDEHCPU	Q10UDEHCPU	Q13UDEHCPU
Control method			Stored program cyclic operation				
I/O control mode			Refresh mode (Direct access I/O is available by specifying direct access I/O (DX□, DY□).)				
Program language	Sequence control language		Relay symbol language, logic symbolic language, MELSAP3 (SFC), MELSAP-L, function block and structured text (ST)				
	Process control language		----				
Processing speed (sequence instruction)	LD X0		20ns	9.5ns			
	MOV D0 D1		40ns	19ns			
Processing speed (redundant function)	Tracking execution time (increased scan time)		----				
Constant scan (Function for keeping regular scan time)			0.5 to 2000ms (Setting available in 0.5ms unit) (Setting by parameters)				
Program size*1*2			30K steps (120K bytes)	40K steps (160K bytes)	60K steps (240K bytes)	100K steps (400K bytes)	130K steps (520K bytes)
Memory size*1	Program memory (drive 0)		120K bytes	160K bytes	240K bytes	400K bytes	520K bytes
	Memory card (RAM) (drive 1)		Size of the installed memory card (8M bytes max.)				
	Memory card (ROM) (drive 2)		Size of the installed memory card (Flash card: 4M bytes max., ATA card: 32M bytes max.)				
	Standard RAM (drive 3)		192K bytes	256K bytes	768K bytes	1024K bytes	
	Standard ROM (drive 4)		1024K steps			2048K steps	
	CPU shared memory*3		8K bytes				
		Multiple CPU high speed transmission area	32K bytes				

*1 The size unit of the files stored in the memory area differs depending on the CPU modules. For details on the file size unit, refer to the following manual.

QnUCPU User's Manual (Function Explanation, Program Fundamentals)

*2 The maximum number of executable sequence steps is obtained by the following formula.
(Program size) - (File header size (Default: 34 steps))
For details on the program size and files, refer to the following manual.

QnUCPU User's Manual (Function Explanation, Program Fundamentals)

*3 Data in the CPU shared memory is not latched.
Data in the CPU shared memory is cleared when the programmable controller is powered off and on or the CPU module is reset.

QCPU User's Manual (Multiple CPU System)

Item			Universal model QCPU				
			Q03UDECPU	Q04UDEHCPU	Q06UDEHCPU	Q10UDEHCPU	Q13UDEHCPU
Max. number of files stored	Program memory		124*4			252*4	
	Memory card (RAM)		319 (When the Q3MEM-8MBS is used)				
	Memory card (ROM)	Flash card	288				
		ATA card	511				
	Standard RAM		4 files (each one of the following files: file register file, local device file, sampling trace file, and module error collection file)				
	Standard ROM		256				
Max. number of intelligent function module parameters		Initial setting	4096				
		Refresh	2048				
No. of times of writing data into the program memory			Max. 100000 times*5				
No. of times of writing data into the standard ROM			Max. 100000 times*6				
No. of I/O device points (No. of points usable on program)			8192 points (X/Y0 to 1FFF)				
No. of I/O points (No. of points accessible to the actual I/O module)			4096 points (X/Y0 to FFF)				
No. of device points	Internal relay [M]*7		8192 points by default (M0 to 8191) (changeable)				
	Latch relay [L]*7		8192 points by default (L0 to 8191) (changeable)				
	Link relay [B]*7		8192 points by default (B0 to 1FFF) (changeable)				
	Timer [T]*7		2048 points by default (T0 to 2047) (changeable) (Sharing of low- and high-speed timers) The low- and high-speed timers are specified by the instructions. The measurement unit of the low- and high-speed timers is set up by parameters. (Low-speed timer: 1 to 1000ms, 1ms unit, 100ms by default) (High-speed timer: 0.01 to 100ms, 0.01ms unit, 10.00ms by default)				
	Retentive timer [ST]*7		0 points by default (sharing of the low- and high-speed retentive timers) (changeable) The low- and high-speed retentive timers are specified by the instructions. The measurement unit of the low- and high-speed retentive timers is set up by parameters. (Low-speed retentive timer: 1 to 1000ms, 1ms unit, 100ms by default) (High-speed retentive timer: 0.01 to 100ms, 0.01ms unit, 10.00ms by default)				
	Counter [C]*7		Normal counter, 1024 points by default (C0 to 1023) (changeable)				
	Data register [D]*7		12288 points by default (D0 to 12287) (changeable)				
	Extended data register [D]		0 points by default (changeable)				
	Link register [W]*7		8192 points by default (W0 to 1FFF) (changeable)				
	Extended link register [W]		0 points by default (changeable)				
	Annunciator [F]*7		2048 points by default (F0 to 2047) (changeable)				
	Edge relay [V]*7		2048 points by default (V0 to 2047) (changeable)				

*4 The number of executable programs differs depending on the CPU module.
• Q03UDECPU, Q04UDEHCPU, Q06UDEHCPU: up to 124 programs
• Q10UDEHCPU, Q13UDEHCPU: up to 124 programs (125 or more programs cannot be executed.)

*5 A single write operation may not be counted as one.
The number of writes to program memory can be checked with the special register (SD682 or SD683).

*6 A single write operation may not be counted as one.
The number of writes to standard ROM can be checked with the special register (SD687 or SD688).

*7 The number of points can be changed within the setting range. (QnUCPU User's Manual (Function Explanation, Program Fundamentals))

Item				Universal model QCPU				
				Q03UDECPU	Q04UDEHCPU	Q06UDEHCPU	Q10UDEHCPU	Q13UDEHCPU
No. of device points	Link special relay [SB]*8			2048 points by default (SB0 to 7FF) (changeable)				
	Link special register [SW]*8			2048 points by default (SW0 to 7FF) (changeable)				
	File register*9	[R], [ZR]		R: The following number of device points can be used by switching blocks (in increments of 32768 points (R0 to 32767)). ZR: The following number of device points can be used without switching blocks.				
			Standard RAM	98304 points	131072 points	393216 points	524288 points	
			SRAM card (1M byte)	517120 points				
			SRAM card (2M bytes)	1041408 points				
			SRAM card (4M bytes)	2087936 points				
			SRAM card (8M bytes)	4184064 points				
			Flash card (2M bytes)	1041408 points				
			Flash card (4M bytes)	2087936 points				
	Step relay [S]*10			8192 points (S0 to 8191) (The number of device points is fixed.)*11*12				
	Index register/ Standard device register [Z]			Max. 20 points (Z0 to 19)				
	Index register [Z] (32-bit modification specification of ZR device)			Max. 10 points (Z0 to 18) (Index register (Z) is used in double words.)				
	Pointer [P]			4096 points (P0 to 4095), The use ranges of the local pointers and common pointers can be set by parameters.				
	Interrupt pointer [I]			256 points (I0 to 255) The constant cyclic interval of system interrupt pointers I28 to 31 can be set up by parameters. (0.5 to 1000ms, 0.5ms unit) Default values I28: 100ms, I29: 40ms, I30: 20ms, I31: 10ms				
	Special relay [SM]			2048 points (SM0 to 2047) (The number of device points is fixed.)				
	Special register [SD]			2048 points (SD0 to 2047) (The number of device points is fixed.)				
	Function input [FX]			16 points (FX0 to F) (The number of device points is fixed.)				
	Function output [FY]			16 points (FY0 to F) (The number of device points is fixed.)				
	Function register [FD]			5 points (FD0 to 4) (The number of device points is fixed.)				

*8 The number of points can be changed within the setting range. (QnUCPU User's Manual (Functional Explanation/Program Basics))

*9 When a Flash card is used, only reading is possible. ATA cards cannot be used.

*10 The step relay is a device for the SFC function.

*11 The number of device points can be changed to 0K points for the universal model QCPU with serial number "10042" or later (first five digits).

*12 The step relay can be set maximum of 16384 points in increments of 1K for the universal model QCPU with serial number "12052" or later (first five digits). (Page 658, Appendix 6)

Item			Universal model QCPU				
			Q03UDECPU	Q04UDEHCPU	Q06UDEHCPU	Q10UDEHCPU	Q13UDEHCPU
No. of device tracking words			----				
Link direct device			Device for accessing the link device of a network module directly Specified form: J□□\X□□, J□□\Y□□, J□□\W□□, J□□\B□□, J□□\SW□□, J□□\SB□□				
Intelligent function module device			Device for accessing the buffer memory of the intelligent function module directly Specified form: U□□\G□□				
Specifications of Ethernet port built in the CPU module*13	Data transmission speed		100/10Mbps				
	Communication mode		Full-duplex/Half-duplex				
	Transmission method		Base band				
	Max. distance between hub and node		100m				
	Max. number of connectable nodes	10BASE-T	Maximum number of cascade connections: four levels*15				
		100BASE-TX	Maximum number of cascade connections: two levels*15				
	Number of connections*14		16 for a total of socket communication, MELSOFT connection, and MC protocol and 1 for FTP				
Latch range			L0 to 8191 (8192 points by default) (Latch range can be set for B, F, V, T, ST, C, D, and W.) (Setting by parameters)				
RUN/PAUSE contact			One contact can be set up in X0 to 1FFF for each of RUN and PAUSE. (Setting by parameters)				
Clock function			Year, month, date, hour, minute, second, and day of the week (Automatic leap year detection) Accuracy: -2.96 to +3.74s (TYP.+1.42s)/d at 0°C Accuracy: -3.18 to +3.74s (TYP.+1.50s)/d at 25°C Accuracy: -13.20 to +2.12s (TYP.-3.54s)/d at 55°C				
Allowable momentary power failure time			Varies depending on the power supply module.				
5VDC internal current consumption			0.33A*15	0.39A*16			
External dimensions		H	98mm				
		W	27.4mm				
		D	89.3mm*17				
Weight			0.20kg*17				

*13 For the Built-in Ethernet port QCPU

*14 The number is a total of TCP/IP and UDP/IP.

*15 The value is 0.46A for the Q03UDECPU.

*16 The value is 0.49A for the Q04UDEHCPU, Q06UDEHCPU, Q10UDEHCPU, and Q13UDEHCPU.

*17 For the Q03UDECPU, Q04UDEHCPU, Q06UDEHCPU, Q10UDEHCPU, and Q13UDEHCPU, the values are as follows:
- External dimensions (D): 115mm
- Weight: 0.22kg

*18 This is the number of connectable levels when a repeater hub is used. For the number of connectable levels when a switching hub is used, contact the manufacturer of the switching hub used.

Remark

For the general specifications, refer to Page 119, CHAPTER 5.

(5) Q20UDEHCPU, Q26UDEHCPU, Q50UDEHCPU, Q100UDEHCPU

Item			Universal model QCPU			
			Q20UDEHCPU	Q26UDEHCPU	Q50UDEHCPU	Q100UDEHCPU
Control method			Stored program cyclic operation			
I/O control mode			Refresh mode (Direct access I/O is available by specifying direct access I/O (DX□, DY□).)			
Program language	Sequence control language		Relay symbol language, logic symbolic language, MELSAP3 (SFC), MELSAP-L, function block and structured text (ST)			
	Process control language		----			
Processing speed (sequence instruction)	LD X0		9.5ns			
	MOV D0 D1		19ns			
Processing speed (redundant function)	Tracking execution time (increased scan time)		----			
Constant scan (Function for keeping regular scan time)			0.5 to 2000ms (Setting available in 0.5ms unit) (Setting by parameters)			
Program size*1*2			200K steps (800K bytes)	260K steps (1040K bytes)	500K steps (2000K bytes)	1000K steps (4000K bytes)
Memory size*1	Program memory (drive 0)		800K bytes	1040K bytes	2000K bytes	4000K bytes
	Memory card (RAM) (drive 1)		Size of the installed memory card (8M bytes max.)			
	Memory card (ROM) (drive 2)		Size of the installed memory card (Flash card: 4M bytes max., ATA card: 32M bytes max.)			
	Standard RAM (drive 3)		1280K bytes		1536K bytes	1792K bytes
	Standard ROM (drive 4)		4096K bytes		8192K bytes	16384K bytes
	CPU shared memory*3		8K bytes			
		Multiple CPU high speed transmission area	32K bytes			

*1 The size unit of the files stored in the memory area differs depending on the CPU modules. For details on the file size unit, refer to the following manual.

QnUCPU User's Manual (Function Explanation, Program Fundamentals)

*2 The maximum number of executable sequence steps is obtained by the following formula.
(Program size) - (File header size (Default: 34 steps))
For details on the program size and files, refer to the following manual.

QnUCPU User's Manual (Function Explanation, Program Fundamentals)

*3 Data in the CPU shared memory is not latched.
Data in the CPU shared memory is cleared when the programmable controller is powered off and on or the CPU module is reset.

QCPU User's Manual (Multiple CPU System)

Item			Universal model QCPU			
			Q20UDEHCPU	Q26UDEHCPU	Q50UDEHCPU	Q100UDEHCPU
Max. number of files stored	Program memory		252[*4]			
	Memory card (RAM)		319 (When the Q3MEM-8MBS is used)			
	Memory card (ROM)	Flash card	288			
		ATA card	511			
	Standard RAM		4 files (each one of the following files: file register file, local device file, sampling trace file, and module error collection file)			
	Standard ROM		256		512	
Max. number of intelligent function module parameters		Initial setting	4096			
		Refresh	2048			
No. of times of writing data into the program memory			Max. 100000 times[*5]			
No. of times of writing data into the standard ROM			Max. 100000 times[*6]			
No. of I/O device points (No. of points usable on program)			8192 points (X/Y0 to 1FFF)			
No. of I/O points (No. of points accessible to the actual I/O module)			4096 points (X/Y0 to FFF)			
No. of device points	Internal relay [M][*7]		8192 points by default (M0 to 8191) (changeable)			
	Latch relay [L][*7]		8192 points by default (L0 to 8191) (changeable)			
	Link relay [B][*7]		8192 points by default (B0 to 1FFF) (changeable)			
	Timer [T][*7]		2048 points by default (T0 to 2047) (changeable) (Sharing of low- and high-speed timers) The low- and high-speed timers are specified by the instructions. The measurement unit of the low- and high-speed timers is set up by parameters. (Low-speed timer: 1 to 1000ms, 1ms unit, 100ms by default) (High-speed timer: 0.01 to 100ms, 0.01ms unit, 10.00ms by default)			
	Retentive timer [ST][*7]		0 points by default (sharing of the low- and high-speed retentive timers) (changeable) The low- and high-speed retentive timers are specified by the instructions. The measurement unit of the low- and high-speed retentive timers is set up by parameters. (Low-speed retentive timer: 1 to 1000ms, 1ms unit, 100ms by default) (High-speed retentive timer: 0.01 to 100ms, 0.01ms unit, 10.00ms by default)			
	Counter [C][*7]		Normal counter, 1024 points by default (C0 to 1023) (changeable)			
	Data register [D][*7]		12288 points by default (D0 to 12287) (changeable)			
	Extended data register [D]		0 points by default (changeable)		131072 points by default (changeable)	
	Link register [W][*7]		8192 points by default (W0 to 1FFF) (changeable)			
	Extended link register [W]		0 points by default (changeable)			
	Annunciator [F][*7]		2048 points by default (F0 to 2047) (changeable)			
	Edge relay [V][*7]		2048 points by default (V0 to 2047) (changeable)			

*4 The number of executable programs differs depending on the CPU modules.
• Q20UDEHCPU, Q26UDEHCPU: up to 124 programs (125 or more programs cannot be executed.)
• Q50UDEHCPU, Q100UDEHCPU: up to 252 programs

*5 A single write operation may not be counted as one.
The number of writes to program memory can be checked with the special register (SD682 or SD683).

*6 A single write operation may not be counted as one.
The number of writes to standard ROM can be checked with the special register (SD687 or SD688).

*7 The number of points can be changed within the setting range. (QnUCPU User's Manual (Function Explanation, Program Fundamentals))

Item				Universal model QCPU			
				Q20UDEHCPU	Q26UDEHCPU	Q50UDEHCPU	Q100UDEHCPU
No. of device points	Link special relay [SB]*8			2048 points by default (SB0 to 7FF) (changeable)			
	Link special register [SW]*8			2048 points by default (SW0 to 7FF) (changeable)			
	File register*9	[R], [ZR]		R: The following number of device points can be used by switching blocks (in increments of 32768 points (R0 to 32767)). ZR: The following number of device points can be used without switching blocks.			
			Standard RAM	655360 points		786432 points	917504 points
			SRAM card (1M byte)	517120 points			
			SRAM card (2M bytes)	1041408 points			
			SRAM card (4M bytes)	2087936 points			
			SRAM card (8M bytes)	4184064 points			
			Flash card (2M bytes)	1041408 points			
			Flash card (4M bytes)	2087936 points			
	Step relay [S]*10			8192 points (S0 to 8191) (The number of device points is fixed.)*11*12			
	Index register/ Standard device register [Z]			Max. 20 points (Z0 to 19)			
	Index register [Z] (32-bit modification specification of ZR device)			Max. 10 points (Z0 to 18) (Index register (Z) is used in double words.)			
	Pointer [P]			4096 points (P0 to 4095), The use ranges of the local pointers and common pointers can be set by parameters.			
	Interrupt pointer [I]			256 points (I0 to 255) The constant cyclic interval of system interrupt pointers I28 to 31 can be set up by parameters. (0.5 to 1000ms, 0.5ms unit) Default values I28: 100ms, I29: 40ms, I30: 20ms, I31: 10ms			
	Special relay [SM]			2048 points (SM0 to 2047) (The number of device points is fixed.)			
	Special register [SD]			2048 points (SD0 to 2047) (The number of device points is fixed.)			
	Function input [FX]			16 points (FX0 to F) (The number of device points is fixed.)			
	Function output [FY]			16 points (FY0 to F) (The number of device points is fixed.)			
	Function register [FD]			5 points (FD0 to 4) (The number of device points is fixed.)			

*8 The number of points can be changed within the setting range. (QnUCPU User's Manual (Functional Explanation/Program Basics))

*9 When a Flash card is used, only reading is possible. ATA cards cannot be used.

*10 The step relay is a device for the SFC function.

*11 The number of device points can be changed to 0K points for the universal model QCPU with serial number "10042" or later (first five digits).

*12 The step relay can be set maximum of 16384 points in increments of 1K for the universal model QCPU with serial number "12052" or later (first five digits). (Page 658, Appendix 6)

Item			Universal model QCPU			
			Q20UDEHCPU	Q26UDEHCPU	Q50UDEHCPU	Q100UDEHCPU
No. of device tracking words			----			
Link direct device			Device for accessing the link device of a network module directly Specified form: J□□\X□□, J□□\Y□□, J□□\W□□, J□□\B□□, J□□\SW□□, J□□\SB□□			
Intelligent function module device			Device for accessing the buffer memory of the intelligent function module directly Specified form: U□□\G□□			
Specifications of Ethernet port built in the CPU module*13	Data transmission speed		100/10Mbps			
	Communication mode		Full-duplex/Half-duplex			
	Transmission method		Base band			
	Max. distance between hub and node		100m			
	Max. number of connectable nodes	10BASE-T	Maximum number of cascade connections: four levels*17			
		100BASE-TX	Maximum number of cascade connections: two levels*17			
	Number of connections*14		16 for a total of socket communication, MELSOFT connection, and MC protocol and 1 for FTP			
Latch range			L0 to 8191 (8192 points by default) (Latch range can be set for B, F, V, T, ST, C, D, and W.) (Setting by parameters)			
RUN/PAUSE contact			One contact can be set up in X0 to 1FFF for each of RUN and PAUSE. (Setting by parameters)			
Clock function			Year, month, date, hour, minute, second, and day of the week (Automatic leap year detection) Accuracy: -2.96 to +3.74s (TYP.+1.42s)/d at 0°C Accuracy: -3.18 to +3.74s (TYP.+1.50s)/d at 25°C Accuracy: -13.20 to +2.12s (TYP.-3.54s)/d at 55°C			
Allowable momentary power failure time			Varies depending on the power supply module.			
5VDC internal current consumption			0.39A*15		0.50A	
External dimensions		H	98mm			
		W	27.4mm			
		D	89.3mm*16		115mm	
Weight			0.20kg*16		0.24kg	

*13 For the Built-in Ethernet port QCPU

*14 The number is a total of TCP/IP and UDP/IP.

*15 The value is 0.49A for the Q20UDEHCPU and Q26UDEHCPU.

*16 For the Q20UDEHCPU and Q26UDEHCPU, the values are as follows:
- External dimensions (D): 115mm
- Weight: 0.22kg

*17 This is the number of connectable levels when a repeater hub is used. For the number of connectable levels when a switching hub is used, contact the manufacturer of the switching hub used.

Remark

For the general specifications, refer to Page 119, CHAPTER 5.

(6) Q03UDVCPU, Q04UDVCPU, Q06UDVCPU, Q13UDVCPU, Q26UDVCPU

Item			Universal model QCPU				
			Q03UDVCPU	Q04UDVCPU	Q06UDVCPU	Q13UDVCPU	Q26UDVCPU
Control method			Stored program cyclic operation				
I/O control mode			Refresh mode (Direct access I/O is available by specifying direct access I/O (DX□, DY□).)				
Program language	Sequence control language		Relay symbol language, logic symbolic language*10, MELSAP3 (SFC), MELSAP-L, function block, and structured text (ST)				
	Process control language		----				
Processing speed (sequence instruction)	LD X0		1.9ns				
	MOV D0 D1		3.9ns				
Processing speed (redundant function)	Tracking execution time (increased scan time)		----				
Constant scan (Function for keeping regular scan time)			0.5 to 2000ms (Setting available in 0.1ms unit) (Setting by parameters)				
Program size*1*2			30K steps (120K bytes)	40K steps (160K bytes)	60K steps (240K bytes)	130K steps (520K bytes)	260K steps (1040K bytes)
Memory size	Program memory (drive 0)		120K bytes	160K bytes	240K bytes	520K bytes	1040K bytes
	Memory card (RAM) (drive 1)		----				
	Memory card (SD) (drive 2)		Depends on the SD memory card (SD or SDHC type) used. (Max. 32G bytes)				
	Standard RAM (drive 3)	Without an extended SRAM cassette	192K bytes	256K bytes	768K bytes	1024K bytes	1280K bytes
		With an extended SRAM cassette	Capacities of the memory in the module + extended SRAM cassette (The maximum capacity of an extended SRAM cassette is 8M bytes.)				
	Standard ROM (drive 4)		1025.5K bytes			2051K bytes	4102K bytes
	CPU shared memory*3		8K bytes				
		Multiple CPU high speed transmission area	32K bytes				

*1 The maximum number of executable sequence steps is obtained by the following formula.
(Program size) - (File header size (Default: 34 steps))
For details of the program size and files, refer to the following.

QnUCPU User's Manual (Function Explanation, Program Fundamentals)

*2 When the QnUD(H)CPU or QnUDE(H)CPU is replaced with the QnUDVCPU, the number of steps in the program may change (increase or decrease).

- For details of the change, refer to the "Precautions for Replacing QnUD(E)(H)CPU with QnUDVCPU/QnUDPVCPU" section in the following manual.

  QnUCPU User's Manual (Function Explanation, Program Fundamentals)
- For the number of steps of each instruction, refer to the “INSTRUCTION TABLES” chapter in the following manual.

  MELSEC-Q/L Programming Manual (Common Instruction)

*3 Data in the CPU shared memory cannot be latched. Data in the CPU shared memory is cleared when the programmable controller is powered on or the CPU module is reset.

QCPU User's Manual (Multiple CPU System)

*10 Logic symbolic language cannot be used because GX Works2 does not support this language.

Item			Universal model QCPU				
			Q03UDVCPU	Q04UDVCPU	Q06UDVCPU	Q13UDVCPU	Q26UDVCPU
Max. number of files stored	Program memory		124*4			252*4	
	Memory card (SD)	SD	Root directory: 512 files (maximum)*11 Subdirectory: 65534 files (maximum)*11				
		SDHC	Root directory: 65535 files (maximum)*11 Subdirectory: 65534 files (maximum)*11				
	Standard RAM	Without an extended SRAM cassette	323				
		With an extended SRAM cassette					
	Standard ROM		256				
Max. number of intelligent function module parameters		Initial setting	4096				
		Refresh	2048				
No. of times of writing data into the program memory			Max. 100000 times*5				
No. of times of writing data into the standard ROM			Max. 100000 times*5				
No. of I/O device points (No. of points usable on program)			8192 points (X/Y0 to 1FFF)				
No. of I/O points (No. of points accessible to the actual I/O module)			4096 points (X/Y0 to FFF)				

	Item	Universal model QCPU				
		Q03UDVCPU	Q04UDVCPU	Q06UDVCPU	Q13UDVCPU	Q26UDVCPU
No. of device points	Internal relay [M]*6	9216 points by default (M0 to 9215) (changeable)	15360 points by default (M0 to 15359) (changeable)		28672 points by default (M0 to 28671) (changeable)	
	Latch relay [L]*6	8192 points by default (L0 to 8191) (changeable)				
	Link relay [B]*6	8192 points by default (B0 to 1FFF) (changeable)				
	Timer [T]*6	2048 points by default (T0 to 2047) (changeable) (Sharing of low- and high-speed timers) The low- and high-speed timers are specified by the instructions. The measurement unit of the low- and high-speed timers is set up by parameters. (Low-speed timer: 1 to 1000ms, 1ms unit, 100ms by default) (High-speed timer: 0.01 to 100ms, 0.01ms unit, 10.00ms by default)				
	Retentive timer [ST]*6	0 points by default (sharing of the low- and high-speed retentive timers) (changeable) The low- and high-speed retentive timers are specified by the instructions. The measurement unit of the low- and high-speed retentive timers is set up by parameters. (Low-speed retentive timer: 1 to 1000ms, 1ms unit, 100ms by default) (High-speed retentive timer: 0.01 to 100ms, 0.01ms unit, 10.00ms by default)				
	Counter [C]*6	Normal counter, 1024 points by default (C0 to 1023) (changeable)				
	Data register [D]*6	13312 points by default (D0 to 13311) (changeable)	22528 points by default (D0 to 22527) (changeable)		41984 points by default (D0 to 41983) (changeable)	
	Extended data register [D]*6	0 points by default (changeable)				
	Link register [W]*6	8192 points by default (W0 to 1FFF) (changeable)				
	Extended link register [W]*6	0 points by default (changeable)				
	Annunciator [F]*6	2048 points by default (F0 to 2047) (changeable)				
	Edge relay [V]*6	2048 points by default (V0 to 2047) (changeable)				
	Link special relay [SB]*6	2048 points by default (SB0 to 7FF) (changeable)				
	Link special register [SW]*6	2048 points by default (SW0 to 7FF) (changeable)				

Item					Universal model QCPU				
					Q03UDVCPU	Q04UDVCPU	Q06UDVCPU	Q13UDVCPU	Q26UDVCPU
No. of device points	File register	[R], [ZR]			R: The following number of device points can be used by switching blocks (in increments of 32768 points (R0 to 32767)). ZR: The following number of device points can be used without switching blocks.				
			Standard RAM	Without an extended SRAM cassette	98304 points	131072 points	393216 points	524288 points	655360 points
				With an extended SRAM cassette (1M bytes)	622592 points	655360 points	917504 points	1048576 points	1179648 points
				With an extended SRAM cassette (2M bytes)	1146880 points	1179648 points	1441792 points	1572864 points	1703936 points
				With an extended SRAM cassette (4M bytes)	2195456 points	2228224 points	2490368 points	2621440 points	2752512 points
				With an extended SRAM cassette (8M bytes)	4292608 points	4325376 points	4587520 points	4718592 points	4849664 points
	Step relay [S]*7				8192 points (S0 to 8191) (changeable)				
	Index register/ Standard device register [Z]				Max. 20 points (Z0 to 19)				
	Index register [Z] (32-bit modification specification of ZR device)				Max. 10 points (Z0 to 18) (Index register (Z) is used in double words.)				
	Pointer [P]				4096 points (P0 to 4095), The use ranges of the local pointers and common pointers can be set up by parameters.				
	Interrupt pointer [I]				256 points (I0 to 255) The constant cyclic interval of system interrupt pointers I28 to 31 and I49 can be set up by parameters. (I28 to 31: 0.5 to 1000ms, in 0.5ms unit, I49: 0.2 to 1.0ms, in 0.1ms unit) Default values I28: 100ms, I29: 40ms, I30: 20ms, I31: 10ms, I49: Blank				
	Special relay [SM]				2048 points (SM0 to 2047) (The number of device points is fixed.)				
	Special register [SD]				2048 points (SD0 to 2047) (The number of device points is fixed.)				
	Function input [FX]				16 points (FX0 to F) (The number of device points is fixed.)				
	Function output [FY]				16 points (FY0 to F) (The number of device points is fixed.)				
	Function register [FD]				5 points (FD0 to 4) (The number of device points is fixed.)				
No. of device tracking words					----				
Link direct device					Device for accessing the link device of a network module directly Specified form: J□□\X□□, J□□\Y□□, J□□\W□□, J□□\B□□, J□□\SW□□, J□□\SB□□				

*4 The number of executable programs in the CPU module is up to 124.

*5 A single write operation may not be counted as one. The count of writing to the program memory or standard ROM can be checked with the special register (SD682 and SD683, or SD687 and SD688, respectively).

*6 The number of points can be changed within the setting range. For the setting range, refer to the following.

QnUCPU User's Manual (Function Explanation, Program Fundamentals)

*7 The step relay is a device for the SFC function.

*11 The numbers are total numbers of files that can be created when a file or folder name length is 13 characters or fewer (including an extension). If the file or folder name length is over 13 characters or the name includes lower-case characters, the maximum number of files is decreased.

Item			Universal model QCPU				
			Q03UDVCPU	Q04UDVCPU	Q06UDVCPU	Q13UDVCPU	Q26UDVCPU
Intelligent function module device			Device for accessing the buffer memory of the intelligent function module directly. Specified form: U□□\G□□				
Specifications of Ethernet port built in the CPU module	Data transmission speed		100/10Mbps				
	Communication mode		Full-duplex/Half-duplex				
	Transmission method		Base band				
	Max. distance between hub and node		100m				
	Max. number of connectable nodes	10BASE-T	Maximum number of cascade connection: four levels*8				
		100BASE-TX	Maximum number of cascade connection: two levels*8				
	Number of connections*9		16 for a total of socket communication, MELSOFT connection, and MC protocol, and 1 for FTP				
Latch range			L0 to 8191 (8192 points by default) (Latch range can be set up for B, F, V, T, ST, C, D, and W.) (Setting by parameters)				
RUN/PAUSE contact			One contact can be set up in X0 to 1FFF for each of RUN and PAUSE. (Setting by parameters)				
Clock function			Year, month, date, hour, minute, second, and day of the week (Automatic leap year detection) Accuracy: -2.97 to +3.75s (TYP.+0.39s)/d at 0°C Accuracy: -2.97 to +3.75s (TYP.+0.39s)/d at 25°C Accuracy: -12.77 to +2.13s (TYP.-5.32s)/d at 55°C				
Allowable momentary power failure time			Varies depending on the power supply module.				
5VDC internal current consumption			0.58A (only CPU module), 0.6A (with an extended SRAM cassette)				
External dimensions		H	98mm				
		W	27.4mm				
		D	115mm				
Weight			0.20kg				

*8 This is the number of connectable levels when a repeater hub is used. For the number of connectable levels when a switching hub is used, contact the manufacturer of the switching hub used.

*9 The number is a total of TCP/IP and UDP/IP.

Remark

For the general specifications, refer to Page 119, CHAPTER 5.

(7) Q04UDPVCPU, Q06UDPVCPU, Q13UDPVCPU, Q26UDPVCPU

Item			Universal model QCPU			
			Q04UDPVCPU	Q06UDPVCPU	Q13UDPVCPU	Q26UDPVCPU
Control method			Stored program cyclic operation			
I/O control mode			Refresh mode (Direct access I/O is available by specifying direct access I/O (DX□, DY□).)			
Program language	Sequence control language		Relay symbol language, logic symbolic language*10, MELSAP3 (SFC), MELSAP-L, function block, and structured text (ST)			
	Process control language		FBD for process control (Programming by PX Developer)			
Processing speed (sequence instruction)	LD X0		1.9ns			
	MOV D0 D1		3.9ns			
Processing speed (redundant function)	Tracking execution time (increased scan time)		----			
Constant scan (Function for keeping regular scan time)			0.5 to 2000ms (Setting available in 0.1ms unit) (Setting by parameters)			
Program size*1*2			40K steps (160K bytes)	60K steps (240K bytes)	130K steps (520K bytes)	260K steps (1040K bytes)
Memory size	Program memory (drive 0)		160K bytes	240K bytes	520K bytes	1040K bytes
	Memory card (RAM) (drive 1)		----			
	Memory card (SD) (drive 2)		Depends on the SD memory card (SD or SDHC type) used. (Max. 32G bytes)			
	Standard RAM (drive 3)	Without an extended SRAM cassette	256K bytes	768K bytes	1024K bytes	1280K bytes
		With an extended SRAM cassette	Capacities of the memory in the module + extended SRAM cassette (The maximum capacity of an extended SRAM cassette is 8M bytes.)			
	Standard ROM (drive 4)		1025.5K bytes		2051K bytes	4102K bytes
	CPU shared memory*3		8K bytes			
		Multiple CPU high speed transmission area	32K bytes			

*1 The maximum number of executable sequence steps is obtained by the following formula.
(Program size) - (File header size (Default: 34 steps))
For details of the program size and files, refer to the following.

QnUCPU User's Manual (Function Explanation, Program Fundamentals)

*2 When the QnPHCPU is replaced with the QnUDPVCPU, the number of steps in the program may change (increase or decrease).

- For details of the change, refer to the "Precautions for Replacing QnPHCPU with QnUDPVCPU" section in the following manual.

  QnUCPU User's Manual (Function Explanation, Program Fundamentals)
- For the number of steps of each instruction, refer to the "INSTRUCTION TABLES" chapter in the following manual.

  MELSEC-Q/L Programming Manual (Common Instruction)

*3 Data in the CPU shared memory cannot be latched. Data in the CPU shared memory is cleared when the programmable controller is powered on or the CPU module is reset.

QCPU User's Manual (Multiple CPU System)

*10 Logic symbolic language cannot be used because GX Works2 does not support this language.

Item			Universal model QCPU			
			Q04UDPVCPU	Q06UDPVCPU	Q13UDPVCPU	Q26UDPVCPU
Max. number of files stored	Program memory		124[*4]		252[*4]	
	Memory card (SD)	SD	Root directory: 512 files (maximum)[*11] Subdirectory: 65534 files (maximum)[*11]			
		SDHC	Root directory: 65535 files (maximum)[*11] Subdirectory: 65534 files (maximum)[*11]			
	Standard RAM	Without an extended SRAM cassette	323			
		With an extended SRAM cassette				
	Standard ROM		256			
Max. number of intelligent function module parameters		Initial setting	4096			
		Refresh	2048			
No. of times of writing data into the program memory			Max. 100000 times[*5]			
No. of times of writing data into the standard ROM			Max. 100000 times[*5]			
No. of I/O device points (No. of points usable on program)			8192 points (X/Y0 to 1FFF)			
No. of I/O points (No. of points accessible to the actual I/O module)			4096 points (X/Y0 to FFF)			

Item		Universal model QCPU			
		Q04UDPVCPU	Q06UDPVCPU	Q13UDPVCPU	Q26UDPVCPU
No. of device points	Internal relay [M]*6	15360 points by default (M0 to 15359) (changeable)		28672 points by default (M0 to 28671) (changeable)	
	Latch relay [L]*6	8192 points by default (L0 to 8191) (changeable)			
	Link relay [B]*6	8192 points by default (B0 to 1FFF) (changeable)			
	Timer [T]*6	2048 points by default (T0 to 2047) (changeable) (Sharing of low- and high-speed timers) The low- and high-speed timers are specified by the instructions. The measurement unit of the low- and high-speed timers is set up by parameters. (Low-speed timer: 1 to 1000ms, 1ms unit, 100ms by default) (High-speed timer: 0.01 to 100ms, 0.01ms unit, 10.00ms by default)			
	Retentive timer [ST]*6	0 points by default (sharing of the low- and high-speed retentive timers) (changeable) The low- and high-speed retentive timers are specified by the instructions. The measurement unit of the low- and high-speed retentive timers is set up by parameters. (Low-speed retentive timer: 1 to 1000ms, 1ms unit, 100ms by default) (High-speed retentive timer: 0.01 to 100ms, 0.01ms unit, 10.00ms by default)			
	Counter [C]*6	Normal counter, 1024 points by default (C0 to 1023) (changeable)			
	Data register [D]*6	22528 points by default (D0 to 22527) (changeable)		41984 points by default (D0 to 41983) (changeable)	
	Extended data register [D]*6	0 points by default (changeable)			
	Link register [W]*6	8192 points by default (W0 to 1FFF) (changeable)			
	Extended link register [W]*6	0 points by default (changeable)			
	Annunciator [F]*6	2048 points by default (F0 to 2047) (changeable)			
	Edge relay [V]*6	2048 points by default (V0 to 2047) (changeable)			
	Link special relay [SB]*6	2048 points by default (SB0 to 7FF) (changeable)			
	Link special register [SW]*6	2048 points by default (SW0 to 7FF) (changeable)			

Item					Universal model QCPU			
					Q04UDPVCPU	Q06UDPVCPU	Q13UDPVCPU	Q26UDPVCPU
No. of device points	File register	[R], [ZR]			R: The following number of device points can be used by switching blocks (in increments of 32768 points (R0 to 32767)). ZR: The following number of device points can be used without switching blocks.			
			Standard RAM	Without an extended SRAM cassette	131072 points	393216 points	524288 points	655360 points
				With an extended SRAM cassette (1M bytes)	655360 points	917504 points	1048576 points	1179648 points
				With an extended SRAM cassette (2M bytes)	1179648 points	1441792 points	1572864 points	1703936 points
				With an extended SRAM cassette (4M bytes)	2228224 points	2490368 points	2621440 points	2752512 points
				With an extended SRAM cassette (8M bytes)	4325376 points	4587520 points	4718592 points	4849664 points
	Step relay [S]*7				8192 points (S0 to 8191) (changeable)			
	Index register/ Standard device register [Z]				Max. 20 points (Z0 to 19)			
	Index register [Z] (32-bit modification specification of ZR device)				Max. 10 points (Z0 to 18) (Index register (Z) is used in double words.)			
	Pointer [P]				4096 points (P0 to 4095) The use ranges of the local pointers and common pointers can be set up by parameters.			
	Interrupt pointer [I]				256 points (I0 to 255) The constant cyclic interval of system interrupt pointers I28 to 31 and 49 can be set up by parameters. (I28 to 31: 0.5 to 1000ms, in 0.5ms unit, I49: 0.1 to 1.0ms, in 0.1ms unit) Default values I28: 100ms, I29: 40ms, I30: 20ms, I31: 10ms, I49: Blank			
	Special relay [SM]				2048 points (SM0 to 2047) (The number of device points is fixed.)			
	Special register [SD]				2048 points (SD0 to 2047) (The number of device points is fixed.)			
	Function input [FX]				16 points (FX0 to F) (The number of device points is fixed.)			
	Function output [FY]				16 points (FY0 to F) (The number of device points is fixed.)			
	Function register [FD]				5 points (FD0 to 4) (The number of device points is fixed.)			
No. of device tracking words					----			
Link direct device					Device for accessing the link device of a network module directly Specified form: J□□\X□□, J□□\Y□□, J□□\W□□, J□□\B□□, J□□\SW□□, J□□\SB□□			

*4 The number of executable programs in the CPU module is up to 124.

*5 A single write operation may not be counted as one. The count of writing to the program memory or standard ROM can be checked with the special register (SD682 and SD683, or SD687 and SD688, respectively).

*6 The number of points can be changed within the setting range. For the setting range, refer to the following.

QnUCPU User's Manual (Function Explanation, Program Fundamentals)

*7 The step relay is a device for the SFC function.

*11 The numbers are total numbers of files that can be created when a file or folder name length is 13 characters or fewer (including an extension). If the file or folder name length is over 13 characters or the name includes lowercase characters, the maximum number of files is decreased.

Item			Universal model QCPU			
			Q04UDPVCPU	Q06UDPVCPU	Q13UDPVCPU	Q26UDPVCPU
Intelligent function module device			Device for accessing the buffer memory of the intelligent function module directly. Specified form: U□□\G□□			
Specifications of Ethernet port built in the CPU module	Data transmission speed		100/10Mbps			
	Communication mode		Full-duplex/Half-duplex			
	Transmission method		Base band			
	Max. distance between hub and node		100m			
	Max. number of connectable nodes	10BASE-T	Maximum number of cascade connection: four levels*8			
		100BASE-TX	Maximum number of cascade connection: two levels*8			
	Number of connections*9		16 for a total of socket communication, MELSOFT connection, and MC protocol, and 1 for FTP			
Latch range			L0 to 8191 (8192 points by default) (Latch range can be set up for B, F, V, T, ST, C, D, and W.) (Setting by parameters)			
RUN/PAUSE contact			One contact can be set up in X0 to 1FFF for each of RUN and PAUSE. (Setting by parameters)			
Clock function			Year, month, date, hour, minute, second, and day of the week (Automatic leap year detection) Accuracy: -2.97 to +3.75s (TYP.+0.39s)/d at 0°C Accuracy: -2.97 to +3.75s (TYP.+0.39s)/d at 25°C Accuracy: -12.77 to +2.13s (TYP.-5.32s)/d at 55°C			
Allowable momentary power failure time			Varies depending on the power supply module.			
5VDC internal current consumption			0.58A (only CPU module), 0.6A (with an extended SRAM cassette)			
External dimensions		H	98mm			
		W	27.4mm			
		D	115mm			
Weight			0.20kg			

*8 This is the number of connectable levels when a repeater hub is used. For the number of connectable levels when a switching hub is used, contact the manufacturer of the switching hub used.

*9 The number is a total of TCP/IP and UDP/IP.

Remark

For the general specifications, refer to Page 119, CHAPTER 5.

6.3 Switch Operation at the Time of Writing Program

6.3.1 Basic model QCPU and Universal model QCPU

This section explains the switch operation after a program is written using programming tool.

(1) When writing program with CPU module set to "STOP"*1

(a) To set to RUN status with device memory data cleared

1. **Set the RUN/STOP/RESET switch to the RESET position once (Approximately 1 second) and return it to the STOP position.**
2. **Set the RUN/STOP/RESET switch to the RUN position.**
3. **The CPU module is placed in the RUN status (RUN LED: On).**

(b) To set to RUN status with device memory data not cleared (held)

1. **Set the RUN/STOP/RESET switch to the RUN position.**
2. **The RUN LED flashes.**
3. **Set the RUN/STOP/RESET switch to the STOP position.**
4. **Set the RUN/STOP/RESET switch to the RUN position again.**
5. **The CPU module is placed in the RUN status (RUN LED: On).**

(2) When a program is written while CPU module is running (online change)*2

No operation is needed for the RUN/STOP/RESET switch of the CPU module. At this time, the device memory data are not cleared.

*1 When a program was written to the program memory during boot operation, also write the program to the boot source memory. If the program is not written to the boot source memory, the old program will be executed at the next boot operation.

*2 When a program is written online in the ladder mode, the changed program is written to the program memory. When performing boot operation, also write the program to the boot source memory after online change. If the program is not written to the boot source memory, the old program will be executed at the next boot operation.

For details of the boot operation, refer to the following.

QnUCPU User's Manual (Function Explanation, Program Fundamentals)

Point

When the CPU module is placed in the STOP status by the remote STOP operation of programming tool, it can be set in the RUN status by the remote RUN operation of programming tool after program write. In that case, no operation is needed for the RUN/STOP/RESET switch of the CPU module. For details of programming tool, refer to the following.

Operating manual for the programming tool used

6.3.2 High Performance model QCPU, Process CPU and Redundant CPU

This section explains the switch operation after a program is written using programming tool.

(1) When writing program with CPU module set to "STOP"*1

(a) To set to RUN status with device memory data cleared

1. **Set the RESET/L. CLR switch to the RESET position once and return it to the original neutral position.**
2. **Set the RUN/STOP switch to RUN.**
3. **The CPU module is placed in the RUN status (RUN LED: On).**

(b) To set to RUN status with device memory data not cleared (held)

1. **Set the RUN/STOP switch to RUN.**
2. **The RUN LED flashes.**
3. **Set the RUN/STOP switch to STOP.**
4. **Set the RUN/STOP switch to RUN again.**
5. **The CPU module is placed in the RUN status (RUN LED: On).**

(2) When a program is written while CPU module is running (online change)*2

No operation is needed for the RUN/STOP switch and RESET/L. CLR switch of the CPU module.

At this time, the device memory data are not cleared.

*1 When a program was written to the program memory during boot operation, also write the program to the boot source memory.
If the program is not written to the boot source memory, the old program will be executed at the next boot operation.

*2 When a program is changed online in the ladder mode, the changed program is written to the program memory.
When performing boot operation, also write the program to the boot source memory after online change. If the program is not written to the boot source memory, the old program will be executed at the next boot operation.

For details of the boot operation, refer to the following.

Qn(H)/QnPH/QnPRHCPU User's Manual (Function Explanation, Program Fundamentals)

Point

- Before writing a program to the CPU module, perform the following operation.
  - Set the system protect setting switch (DIP switch: SW1) of the CPU module to off (not protected).
  - Cancel the registered password on programming tool.
- When the CPU module is placed in the STOP status by the remote STOP operation of programming tool, it can be put in the RUN status by the remote RUN operation of programming tool after program write. In that case, No operation is needed for the RUN/STOP switch and RESET/L. CLR switch of the CPU module.
- For details of programming tool, refer to the following.
  Operating manual for the programming tool used

6.4 Reset Operation

6.4.1 Basic model QCPU and Universal model QCPU

For the Universal model QCPU, the RUN/STOP/RESET switch of the CPU module is used to switch between the RUN status and STOP status and to perform RESET operation.
When using the RUN/STOP/RESET switch to reset the CPU module, setting the RUN/STOP/RESET switch to the reset position will not reset it immediately.

Point

Hold the RUN/STOP/RESET switch in the RESET position until reset processing is complete (the flashing ERR. LED turns off).
If you release your hand from the RUN/STOP/RESET switch during reset processing (the ERR. LED is flashing), the switch will return to the STOP position and reset processing cannot be completed.

Perform reset operation using the RUN/STOP/RESET switch as shown in the following flowchart.

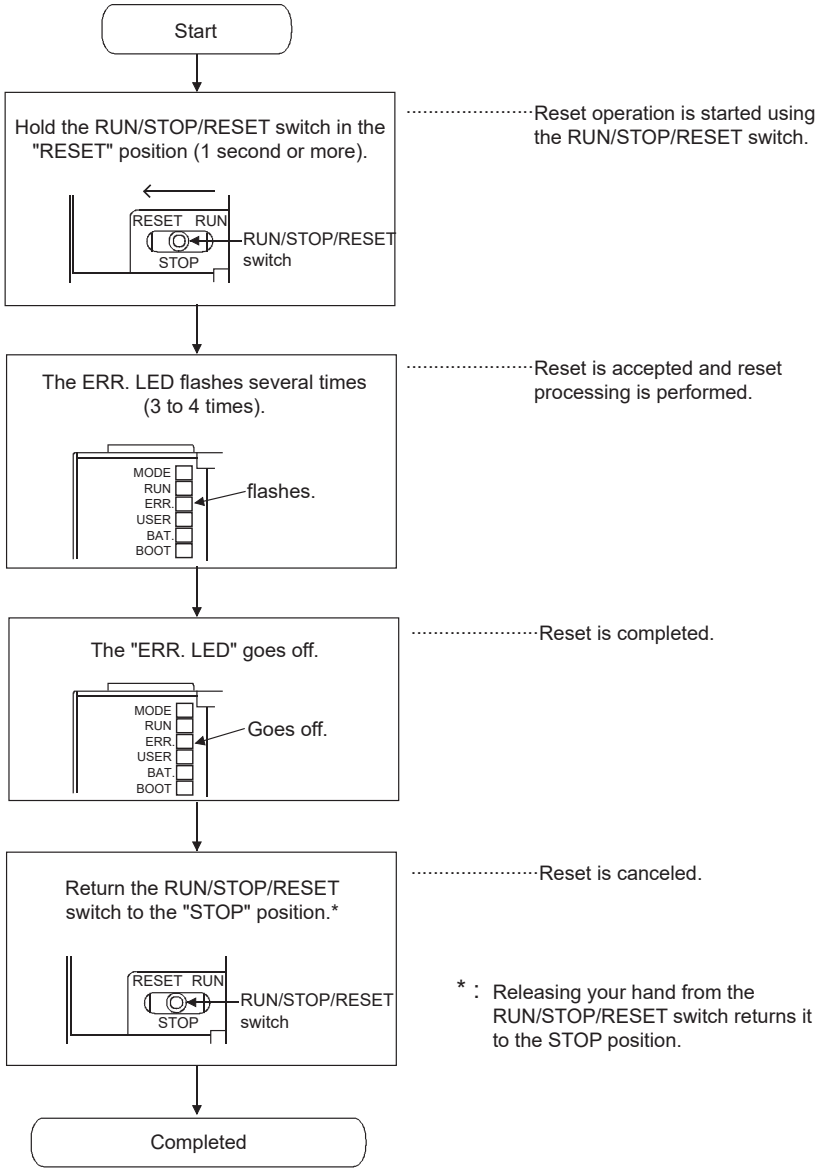

Point

Operate the RUN/STOP/RESET switch with your fingertips.
To prevent the switch from being damaged, do not use any tool such as screw driver.

6.4.2 High Performance model QCPU, Process CPU and Redundant CPU

Reset operation is performed by turning the RESET/L. CLR switch of the CPU module to the RESET side for the High Performance model QCPU, Process CPU, and Redundant CPU.

Point

Be sure to return the RESET/L. CLR switch to the neutral position after resetting. When the system is left with the RESET/L. CLR switch set to the RESET, the entire system is reset, not operated normally.

6.5 Latch Clear Operation

6.5.1 Basic model QCPU and Universal model QCPU

To clear latch data, perform either of the following.

- Remote latch clear using a programming tool
- Latch clear by using the special relay and special register areas Note 6.1

Point

- The latch data cannot be cleared using a switch of the CPU module.
- The valid/invalid for latch clear in the clear range of latch clear operation can be set for each device. The setting can be made in the device setting of the PLC parameter.
- For details of the latch clear operation, refer to the following.
  User's Manual (Function Explanation, Program Fundamentals) for the CPU module used

6.5.2 High Performance model QCPU, Process CPU and Redundant CPU

To perform latch clear, operate the RESET/L. CLR switch in the following procedure.

1. **RUN/STOP switch: STOP**
2. **RESET/L. CLR switch: Set the switch to the L. CLR position several times until the USER LED flashes.**
   USER LED: Flash (Ready for latch clear)
3. **RESET/L. CLR switch: Set the switch to the L. CLR position one more time.**
   USER LED: Off (Latch clear complete)

Point

- The valid/invalid for latch clear in the clear range of latch clear operation can be set for each device. The setting can be configured in the device setting of the PLC parameter.
- In addition to the way of using the RESET/L. CLR switch for latch clear, remote latch clear may be performed from programming tool.
  For details of remote latch clear operation by programming tool, refer to the following.
  Qn(H)/QnPH/QnPRHCPU User's Manual (Function Explanation, Program Fundamentals)

Note 6.1 Universal

Only the High-speed Universal model QCPU whose serial number (first five digits) is "15043" or later and the Universal model Process CPU whose serial number (first five digits) is "15072" or later support this type of latch clear operation.

6.6 Automatic Write to the Standard ROM Note 6.1

The High Performance model QCPU, Process CPU and Redundant CPU allow data in the memory card to be written into the standard ROM automatically.
For details, refer to the following.

Qn(H)/QnPH/QnPRHCPU User's Manual (Function Explanation, Program Fundamentals)

(1) Procedures for automatic write to the standard ROM

Automatic write to the standard ROM is performed with the following procedures.

(a) Operation with programming tool (setting automatic write to the standard ROM)

Project window ⇨ [Parameter] ⇨ [PLC Parameter] ⇨ [Boot File]

1. **Check the "Auto Download All Data from Memory Card to Standard ROM".**
2. **Set the parameter and program to be booted in the "Boot File" tab.**
   (Set the "Transfer from" to "Standard ROM".)

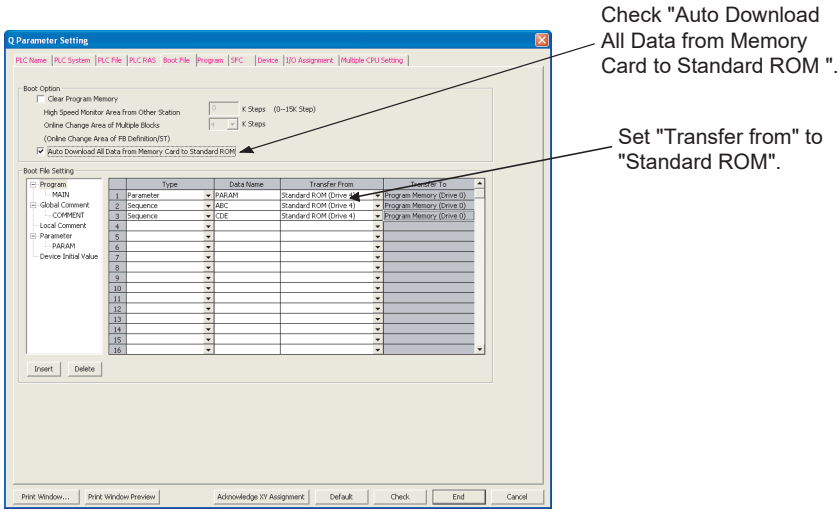

3. **Store the set parameters and programs to be booted in the memory card.**

Note 6.1 **Basic** **Universal**

For the Basic model QCPU and Universal model QCPU, automatic write to the standard ROM is not available.

(b) Operations on CPU module (automatic write to the standard ROM)

1. **Power off the programmable controller.**
2. **Insert the memory card that contains the parameters and programs to be booted onto the CPU module.**
3. **Set the DIP switches on the CPU module so that the valid parameter drive is matched with the memory card to be installed.**
   - When a SRAM card is installed: SW2 : On, SW3 : Off
   - When a Flash card/ATA card is installed: SW2 : Off, SW3 : On
4. **Power on the programmable controller.**
   Boot the file specified in the memory card into the program memory, and write the program in the memory to the standard ROM after completion of the boot.
5. **The BOOT LED will flash when automatic write to the standard ROM is completed, and the CPU module will be in the stop error status.**
6. **Power off the programmable controller.**
7. **Remove the memory card, and then set the valid parameter drive to the standard ROM with the CPU module's DIP switches.**
   - Standard ROM: SW2 : On, SW3 : Off
8. **The parameters and programs will be booted from the standard ROM to the program memory when the programmable controller is powered on.**

CHAPTER 7 POWER SUPPLY MODULE

This chapter describes the specifications of the power supply modules applicable for the programmable controller system (The Q Series power supply module, slim type power supply module, redundant power supply module and AnS/A Series power supply module) and how to select the most suitable module.

7.1 Part Names and Settings

This section describes part names of each power supply module.

■ Q61P-A1 (100 to 120VAC input, 5VDC 6A output)
■ Q61P-A2 (200 to 240VAC input, 5VDC 6A output)
■ Q61P (100 to 240VAC input, 5VDC 6A output)
■ Q62P (100 to 240VAC input, 5VDC 3A/24VDC 0.6A output)
■ Q63P (24VDC input, 5VDC 6A output)
■ Q64P (100 to 120VAC/200 to 240VAC input, 5VDC 8.5A output)
■ Q64PN (100 to 240VAC input, 5VDC 8.5A output)

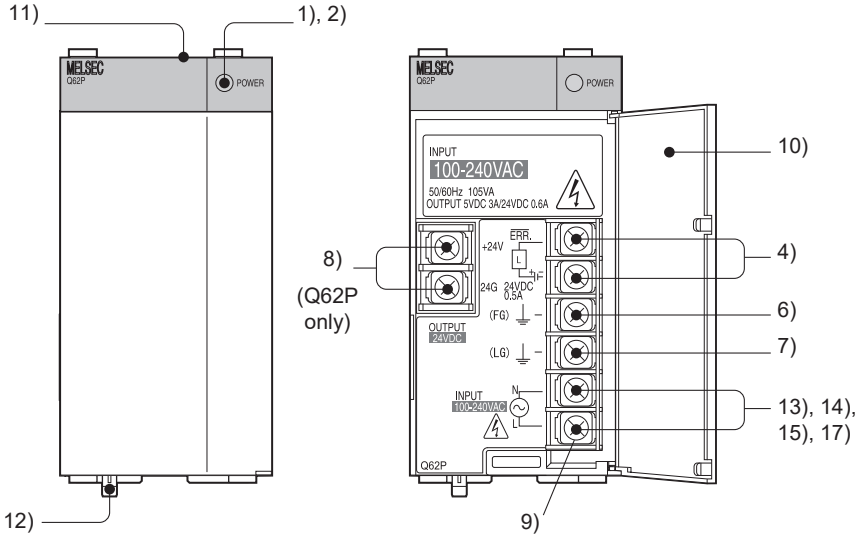

Q61P-A1, Q61P-A2, Q61P, Q62P, Q64P, Q64PN

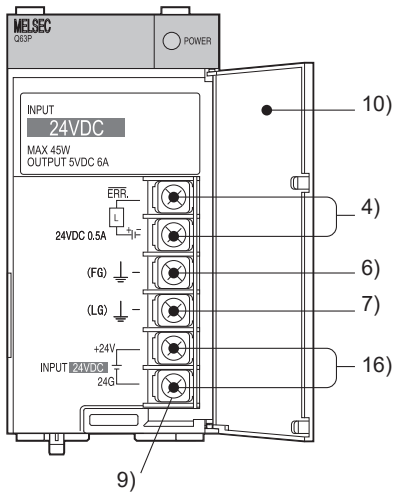

Q63P

■ Q61P-D (100 to 240VAC input, 5VDC 6A output)

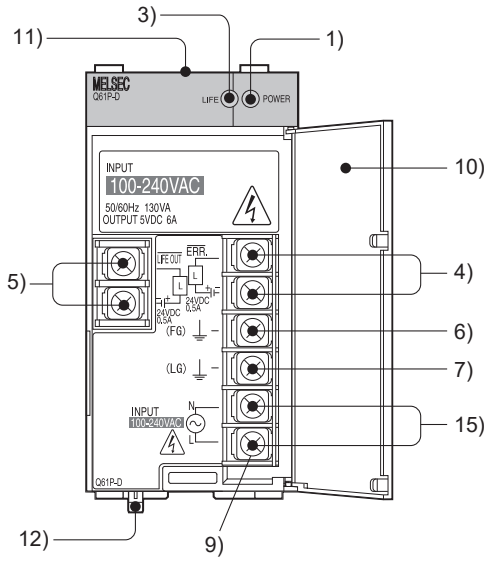

■ Q61SP (100 to 240VAC input, 5VDC 2A output)

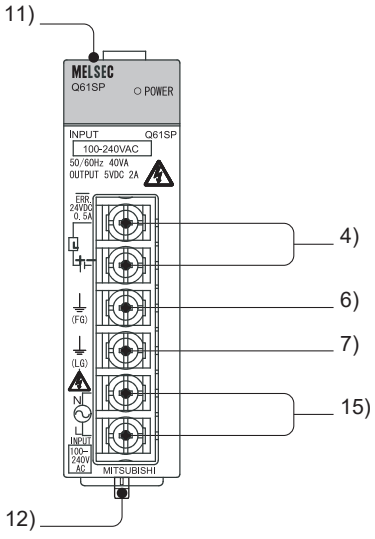

No.	Name	Application
1)	POWER LED[*2]	On (green): Normal (5VDC output, momentary power failure within 20ms) Off: • AC power supply is on but the power supply module is out of order. (5VDC error, overload, internal circuit failure, or blown fuse) • AC power supply is not on. • Power failure (including an momentary power failure of 20ms or more)
2)	POWER LED	On (green): Normal (5VDC output, momentary power failure within 10ms) Off: • DC power supply is on but the power supply module is out of order. (5VDC error, overload, internal circuit failure, or blown fuse) • DC power supply is not on. • Power failure (including an momentary power failure of 10ms or more)
3)	LIFE LED	On (green): When operation has started On (orange): Remaining life of the module approx. 50% Flash (orange): • On for 5 seconds and off for 1 second: Module remaining life is approx. 1 year • At intervals of 0.5 seconds: Module remaining life is approx. 6 months Off: • Module life expired • Ambient temperature is out of range (Ambient temperature of the module is exceeding the specification and also the life detection function is stopped.) On (red): Ambient temperature out of range (Ambient temperature of the module is exceeding the specification) Flash(red): Function failure (at intervals of 1 second)
4)	$\overline{\text{ERR.}}$ terminal	• Turns on when the entire system operates normally. • Turns off (opens) when the power is not supplied, a stop error (including reset) occurs in the CPU module, or the fuse is blown. • In a multiple CPU system, turns off when a stop error occurs in any of the CPU modules. Normally off when mounted on an extension base unit.
5)	$\overline{\text{LIFE OUT}}$ terminal	• Output signal of the terminal turns off (opens) when the life is detected. (Applicable only when the remaining life is 1 year or less.) • Flicker-OFF (opens) when the life diagnostics error (including detection error) is detected.[*1] • Flicker-OFF (opens) when the ambient temperature is detected out of range. • Output signal of the terminal turns off (opens) when the watchdog timer error is detected in the module. The above operations are available when the module is mounted on an extension base unit.
6)	FG terminal	Ground terminal connected to the shield pattern of the printed circuit board.
7)	LG terminal	Grounding for the power supply filter. For AC input, it has one-half the potential of the input voltage.
8)	+24V, 24G terminals	Used to supply 24VDC power to inside the output module (using external wiring).
9)	Terminal screw	M3.5 × 7 screw
10)	Terminal cover	Protective cover of the terminal block
11)	Module fixing screw hole	Used to secure the module to the base unit. M3 × 12 screw (user-prepared) (Tightening torque range : 0.36 to 0.48N•m)
12)	Module mounting lever	Used to mount the module onto the base unit.
13)	Power input terminals	Power input terminals for Q61P-A1 and connected to a 100VAC power supply.
14)	Power input terminals	Power input terminals for Q61P-A2 and connected to a 200VAC power supply.
15)	Power input terminals	Power input terminals for Q61P, Q61P-D, Q61SP, Q62P, Q64PN and connected to a power supply of 100VAC to 200VAC.

No.	Name	Application
16)	Power input terminals	Power input terminals for Q63P and connected to a 24VDC power supply.
17)	Power input terminals	Power input terminals for Q64P and connected to a 100VAC/200VAC power supply.

*1 Flicker-OFF indicates that the output signal of the terminal turns off and on at intervals of one second for three times and then off (opens).

*2 When using the Q61P-D in the system configured with an extension base unit, the POWER LED of the Q61P-D on the extension base unit may turn on in dull red when the module is turned off. Note that this does not indicate an error.

Point

- The Q61P-A1 is dedicated for inputting a voltage of 100 VAC.
  Do not input a voltage of 200 VAC into it or trouble may occur on the Q61P-A1.

Power supply module	Supply power voltage	
	100VAC	200VAC
Q61P-A1	Operates normally.	Power supply module causes trouble.
Q61P-A2	Power supply module does not cause trouble. CPU module cannot be operated.	Operates normally.

- Q64P automatically switches the input range 100/200VAC.
  Therefore, it cannot be used in the intermediate voltage (133 to 169VAC).
  The CPU module may not work normally if the above intermediate voltage is applied.
- Individually ground the LG and FG terminals with a ground resistance of 100 Ω or less.
- When the Q61P-A1, Q61P-A2, Q61P-D, Q61P, Q62P, Q63P, Q64P or Q64PN is mounted on the extension base unit, a system error cannot be detected by the $\overline{\text{ERR.}}$ terminal. (The $\overline{\text{ERR.}}$ terminal is always off.)
- Cables for the $\overline{\text{ERR.}}$ contact and $\overline{\text{LIFE OUT}}$ contact must be up to 30m and installed in the control panel.
- A fuse is built into the power input terminal of L side. Therefore, when the power supply that supplies the power to the power supply module is grounded, connect the grounded side of the power supply to the N terminal and the ungrounded side to the L terminal.
- Place the 24VDC output cables in the control panel. The cable length must be 30m or shorter.

■Q63RP

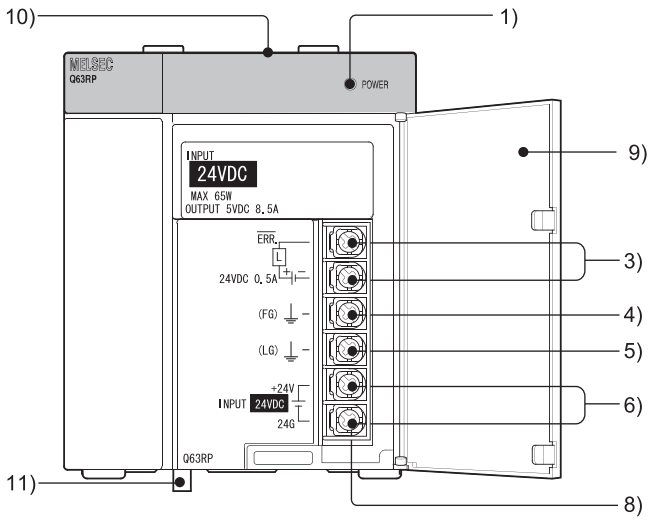

■Q64RPN

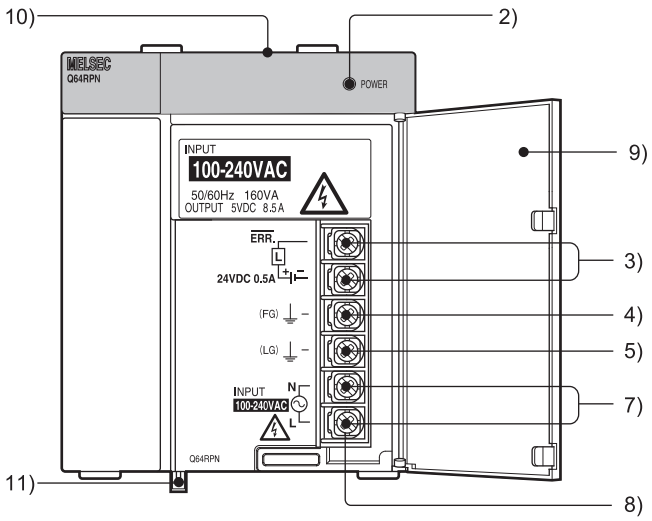

■Q64RP

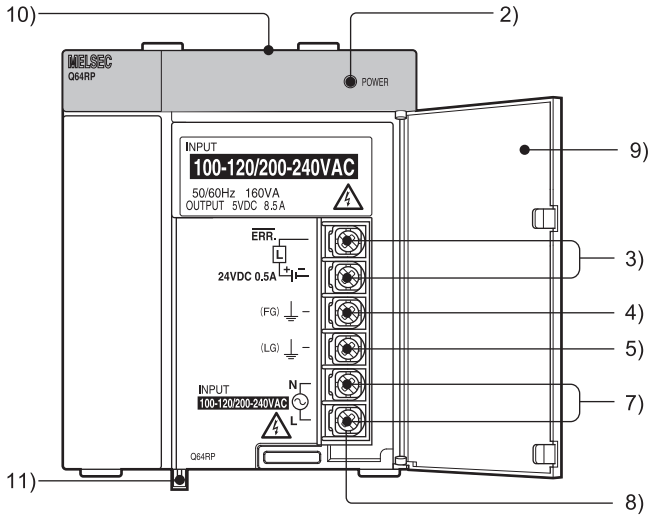

No.	Name	Application
1)	POWER LED*1	On (green): Normal operation (5V DC output, momentary power failure of 10ms or less) On (red): DC power is input but the Q63RP is faulty. (5V DC error, overload, or internal circuit failure) Off: DC power not input, blown fuse, power failure (including momentary power failure of 10ms or more)
2)	POWER LED*1	On (green): Normal (5V DC output, momentary power failure within 20ms) On (red): AC power supply is on but Q64RPN, or Q64RP is out of order. (5V DC error, overload, or internal circuit failure) Off: AC power supply is not on, blown fuse, power failure (including momentary power failure of 20ms or more)
3)	$\overline{\text{ERR.}}$ terminal	<When power supply is mounted on redundant power main base unit (Q3□RB)> • Turns on when the system on the redundant power main base unit operates normally. • Turns off (open) when the Q63RP fails, the DC power supply is not input, a CPU module stop error (including a reset) occurs, or the fuse is blown. • Turns off (open) when a stop error occurs in any of the CPU modules in a multiple CPU system. <When power supply is mounted on redundant power extension base unit (Q6□RB) or redundant type extension base unit (Q6□WRB)> • Turns on when the Q63RP operates normally. • Turns off (open) when the Q63RP fails, the DC power supply is not input, or the fuse is blown.
4)	FG terminal	Ground terminal connected to the shield pattern of the printed circuit board.
5)	LG terminal	Grounding for the power supply filter. The potential of AC input (Q64RPN, or Q64RP) terminal is 1/2 of the input voltage.
6)	Power input terminals	Connect direct current of 24 VDC with the power input terminal.
7)	Power input terminals	Power input terminals for Q64RPN and connected to a 100VAC to 200VAC power supply. Power input terminals for Q64RP and connected to a 100VAC/200VAC power supply.
8)	Terminal screw	M3.5 × 7 screw
9)	Terminal cover	Protective cover of the terminal block
10)	Module fixing screw hole	Screw hole for securing a module to the base unit. M3 × 12 screw (user-prepared) (Tightening torque : 0.36 to 0.48N•m)
11)	Module mounting lever	Used to mount a module on the base unit.

*1 Although the POWER LED turns on in red for a moment immediately after the power supply is turned on or off, redundant power supply modules is not faulty.

Point

- Q64RP automatically switches the input range 100/200VAC.
  Therefore, it cannot be used in the intermediate voltage (133 to 169VAC).
  The CPU module may not work normally if the above intermediate voltage is applied.
- Supply power to redundant power supply modules from separate power sources (a redundant power supply system).
- Individually ground the LG and FG terminals with a ground resistance of 100 Ω or less.

■ A1S61PN

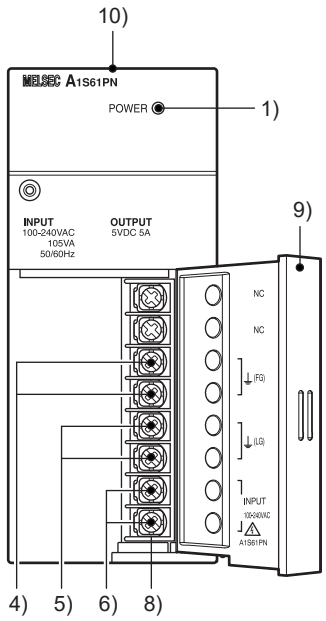

■ A1S62PN

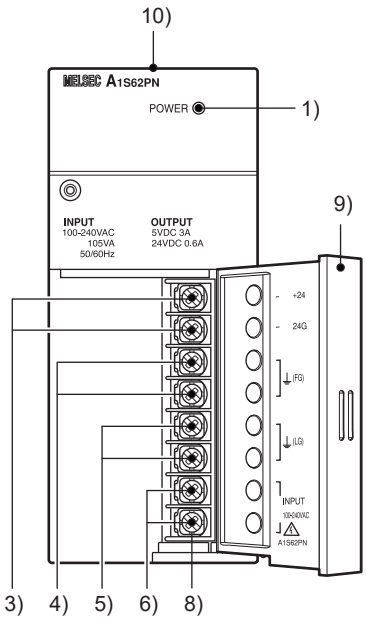

■ A1S63P

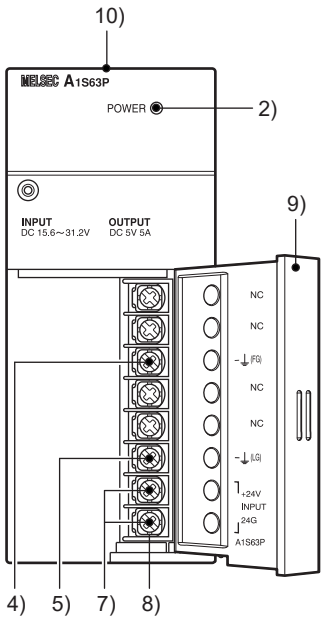

No.	Name	Application
1)	POWER LED	On (green): Normal (5VDC output, momentary power failure within 20ms) Off: • AC power supply is on but the power supply module is out of order. (5VDC error, overload, internal circuit failure, or fuse blown) • AC power supply is not on • Power failure (including an momentary power failure of 20ms or more)
2)	POWER LED	On (green): Normal (5VDC output, momentary power failure within 10ms) Off: • DC power supply is on but the power supply module is out of order. (5VDC error, overload, internal circuit failure, or fuse blown) • DC power supply is not on. • Power failure (including an momentary power failure of 10ms or more)
3)	+24V, 24G terminals	Used to supply 24VDC power to inside the output module (using external wiring).
4)	FG terminals	Ground terminal connected to the shield pattern of the printed circuit board.
5)	LG terminals	Grounding for the power supply filter. The potential of A1S61PN or A1S62PN terminal is 1/2 of the input voltage.
6)	Power input terminals	Used to connect a 100VAC to 200VAC power supply.
7)	Power input terminals	Used to connect a 24VDC power supply.
8)	Terminal screw	M3.5 × 7 screw
9)	Terminal cover	Protective cover of the terminal block
10)	Module fixing screw hole	Used to secure the module to the base unit. (M4 screw, tightening torque : 0.66 to 0.89N•m)

Point

- Do not wire to those terminals for which NC is stamped on the terminal block.
- Individually ground the LG and FG terminals with a ground resistance of 100 Ω or less.

7.1.1 Base unit that can be used in combination with power supply module

This section describes the base unit that can be used in combination with the power supply module respectively.
For details of the CPU modules and base units, refer to the following.
CPU modules: ☞ Page 121, CHAPTER 6
Base units: ☞ Page 239, CHAPTER 8

For details on the system configuration, refer to Page 33, CHAPTER 2.

(1) Main base unit

○: Combination available, ×: Combination not available

Power supply module	Main base unit			
	Q33B Q35B Q38B Q312B	**Q32SB Q33SB Q35SB**	**Q38RB**	**Q35DB Q38DB Q312DB**
Q61P-A1 Q61P-A2 Q61P Q61P-D Q62P Q63P Q64P Q64PN	○	×	×	○
Q61SP	×	○	×	×
Q63RP Q64RPN Q64RP	×	×	○	×

(2) Extension base unit

○: Combination available, ×: Combination not available

Power supply module	Extension base unit						
	Q52B Q55B	Q63B Q65B Q68B Q612B	Q68RB	Q65WRB	QA1S51B	QA1S65B QA1S68B *3	QA65B QA68B *2
Q61P-A1 Q61P-A2 Q61P Q61P-D Q62P Q63P Q64P Q64PN	×	○	×	×	×	×	×
Q61SP	×	×	×	×	×	×	×
Q63RP Q64RPN Q64RP	×	×	○	○*1	×	×	×
A1S61PN A1S62PN A1S63P	×	×	×	×	×	○	×
A61P A61PN A62P A63P A61PEU A62PEU	×	×	×	×	×	×	○

*1 When mounting the Q64RP to the Q65WRB, use the Q64RP whose serial number (first six digits) is "081103" or later. The vibration condition described in the general specifications may not be met if the serial number (first six digits) of the Q64RP is "081102" or earlier is mounted.

*2 The same specifications are applied to the QA6ADP+A6□B.

*3 The same specifications are applied to the QA1S6ADP+A1S6□B.

7.2 Specifications

7.2.1 Power supply module specifications

The following table lists specifications of power supply modules.

Item		Performance Specifications			
		Q61P-A1	Q61P-A2	Q61P	Q62P
Mounting position		Power supply module mounting slot			
Applicable base unit		Q3□B, Q3□DB, Q6□B			
Input power supply		100 to 120VAC $^{+10\%}_{-15\%}$ (85 to 132VAC)	200 to 240VAC $^{+10\%}_{-15\%}$ (170 to 264VAC)	100 to 240VAC $^{+10\%}_{-15\%}$ (85 to 264VAC)	
Input frequency		50/60Hz ±5%			
Input voltage distortion factor		Within 5% (☞ Page 105, Section 4.8.1)			
Max. input apparent power		105VA		120VA	105VA
Max. input power		----			
Inrush current[*1]		20A within 8ms			
Rated output current	5VDC	6A			3A
	24VDC	----			0.6A
External output voltage		----			24VDC ±10%
Overcurrent protection[*1]	5VDC	6.6A or more			3.3A or more
	24VDC	----			0.66A or more
Overvoltage protection[*1]	5VDC	5.5 to 6.5V			
	24VDC	----			
Efficiency		70% or more			65% or more
Allowable momentary power failure time[*1]		Within 20ms			
Dielectric withstand voltage		2300VAC per minute (altitude 0 to 2000m) Between the combined "line input/LG terminals" and the "FG terminal and output"			
Insulation resistance		10MΩ or higher by 500VDC insulation resistance tester Between the combined "line input/LG terminals" and the "FG terminal and output", the line input and LG terminals, the output and FG terminals			
Noise durability		• By noise simulator of 1500Vp-p noise voltage, 1μs noise width and 25 to 60Hz noise frequency • Noise voltage IEC 61000-4-4, 2KV			
Operation indication		LED indication (Normal: On (green), Error: Off)			
Fuse		Built-in (User-unchangeable)			

Item		Performance Specifications			
		Q61P-A1	Q61P-A2	Q61P	Q62P
Contact output section	Application	$\overline{\text{ERR.}}$ contact (☞ Page 204, Section 7.1)			
	Rated switching voltage, current	24VDC, 0.5A			
	Minimum switching load	5VDC, 1mA			
	Response time	OFF to ON: 10ms max., ON to OFF: 12ms max.			
	Life	Mechanical : More than 20 million times Electrical : More than 100 thousand times at rated switching voltage, current			
	Surge suppressor	None			
	Fuse	None			
Terminal screw size		M3.5			
Applicable wire size		0.75 to 2mm^2			
Applicable solderless terminal		RAV1.25 - 3.5, RAV2 - 3.5, thickness 0.8mm or less. Two solderless terminals can be connected to one terminal.			
Applicable tightening torque		0.66 to 0.89N•m			
External dimensions	H	98mm			
	W	55.2mm			
	D	90mm			
Weight		0.31kg		0.40kg	0.39kg

*1 For the descriptions of the specification items, refer to Page 229, Section 7.2.2.

Item		Performance Specifications
		Q63P
Mounting position		Power supply module mounting slot
Applicable base unit		Q3□B, Q3□DB, Q6□B
Input power supply		24VDC $^{+30\%}_{-35\%}$ (15.6 to 31.2VDC)
Input frequency		----
Input voltage distortion factor		----
Max. input power		45W
Inrush current		100A within 1ms (at 24VDC input)
Rated output current	5VDC	6A
	24VDC	----
External output voltage		----
Overcurrent protection*1	5VDC	6.6A or more
	24VDC	----
Overvoltage protection*1	5VDC	5.5 to 6.5V
	24VDC	----
Efficiency		70% or more
Allowable momentary power failure time*1		Within 10ms (at 24VDC input)
Dielectric withstand voltage		510VAC per minute (altitude 0 to 2000m) Between the combined "line input/LG terminals" and the "FG terminal and output"
Insulation resistance		10MΩ or more by insulation resistance tester
Noise durability		By noise simulator of 500Vp-p noise voltage, 1μs noise width and 25 to 60Hz noise frequency
Operation indication		LED indication (Normal: On (green), Error: Off)
Fuse		Built-in (User-unchangeable)
Contact output section	Application	$\overline{\text{ERR.}}$ contact (☞ Page 204, Section 7.1)
	Rated switching voltage, current	24VDC, 0.5A
	Minimum switching load	5VDC, 1mA
	Response time	OFF to ON: 10ms max. ON to OFF: 12ms max.
	Life	Mechanical : More than 20 million times Electrical : More than 100 thousand times at rated switching voltage, current
	Surge suppressor	None
	Fuse	None
Terminal screw size		M3.5
Applicable wire size		0.75 to 2mm^2
Applicable solderless terminal		RAV1.25 - 3.5, RAV2 - 3.5, thickness 0.8mm or less. Two solderless terminals can be connected to one terminal.
Applicable tightening torque		0.66 to 0.89N•m
External dimensions	H	98mm
	W	55.2mm
	D	90mm
Weight		0.33kg

*1 For the description of the specifications, refer to Page 229, Section 7.2.2.

Item		Performance Specifications	
		Q64P	Q64PN
Mounting position		Power supply module mounting slot	
Applicable base unit		Q3□B, Q3□DB, Q6□B	
Input power supply		100 to 120VAC/200 to 240VAC $^{+10\%}_{-15\%}$ (85 to 132VAC/170 to 264VAC)	100 to 240VAC $^{+10\%}_{-15\%}$ (85 to 264VAC)
Input frequency		50/60Hz ±5%	
Input voltage distortion factor		Within 5% (☞ Page 105, Section 4.8.1)	
Max. input apparent power		160VA	
Inrush current[*1]		20A within 8ms	
Rated output current	5VDC	8.5A	
	24VDC	----	
Overcurrent protection[*1]	5VDC	9.9A or more	
	24VDC	----	
Overvoltage protection[*1]	5VDC	5.5 to 6.5V	
	24VDC	----	
Efficiency		70% or more	
Allowable momentary power failure time[*1]		Within 20ms	
Dielectric withstand voltage		2300VAC per minute (altitude 0 to 2000m) Between the combined "line input/LG terminals" and the "FG terminal and output"	
Insulation resistance		10MΩ or higher by 500VDC insulation resistance tester Between the combined "line input/LG terminals" and the "FG terminal and output", the line input and LG terminals, the output and FG terminals	
Noise durability		• By noise simulator of 1500Vp-p noise voltage, 1μs noise width and 25 to 60Hz noise frequency • Noise voltage IEC 61000-4-4, 2KV	
Operation indication		LED (Normal: On (green), Error: Off)[*2]	LED (Normal: On (green), Error: Off)
Fuse		Built-in (User-unchangeable)	
Contact output section	Application	$\overline{\text{ERR.}}$ contact (☞ Page 204, Section 7.1)	
	Rated switching voltage, current	24VDC, 0.5A	
	Minimum switching load	5VDC, 1mA	
	Response time	OFF to ON: 10ms max. ON to OFF: 12ms max.	
	Life	Mechanical : More than 20 million times Electrical : More than 100 thousand times at rated switching voltage, current	
	Surge suppressor	None	
	Fuse	None	
Terminal screw size		M3.5 screw	
Applicable wire size		0.75 to 2mm^2	
Applicable solderless terminal		RAV1.25 - 3.5, RAV2 - 3.5, thickness 0.8mm or less. Two solderless terminals can be connected to one terminal.	
Applicable tightening torque		0.66 to 0.89N•m	

Item		Performance Specifications	
		Q64P	Q64PN
External dimensions	H	98mm	
	W	55.2mm	
	D	115mm	
Weight		0.40kg	0.47kg

*1 For the descriptions of the specification items, refer to Page 229, Section 7.2.2.

*2 During the operation, do not allow the input voltage to change from 200VAC level (170 to 264VAC) to 100VAC level (85 to 132VAC). (If changed, the POWER LED of the module turns off and the system operation stops.)

Item		Performance Specifications
		Q61SP
Mounting position		Power supply module mounting slot
Applicable base unit		Q3□SB
Input power supply		100 to 240VAC $^{+10\%}_{-15\%}$ (85 to 264VAC)
Input frequency		50/60Hz ±5%
Input voltage distortion factor		Within 5% (☞ Page 105, Section 4.8.1)
Max. input apparent power		40VA
Inrush current*1		40A within 8ms
Rated output current	5VDC	2A
	24VDC	----
Overcurrent protection*1	5VDC	2.2A or more
	24VDC	----
Overvoltage protection*1	5VDC	5.5 to 6.5V
	24VDC	----
Efficiency		70% or more
Allowable momentary power failure time*1		Within 20ms (AC100VAC or more)
Dielectric withstand voltage		2300VAC per minute (altitude 0 to 2000m) Between the combined "line input/LG terminals" and the "FG terminal and output"
Insulation resistance		10MΩ or higher by 500VDC insulation resistance tester Between the combined "line input/LG terminals" and the "FG terminal and output", the line input and LG terminals, the output and FG terminals
Noise durability		• By noise simulator of 1500Vp-p noise voltage, 1μs noise width and 25 to 60Hz noise frequency • Noise voltage IEC 61000-4-4, 2KV
Operation indication		LED indication (Normal: On (green), Error: Off)
Fuse		Built-in (User-unchangeable)
Contact output section	Application	$\overline{\text{ERR.}}$ contact (☞ Page 204, Section 7.1)
	Rated switching voltage, current	24VDC, 0.5A
	Minimum switching load	5VDC, 1mA
	Response time	OFF to ON: 10ms max. ON to OFF: 12ms max.
	Life	Mechanical : More than 20 million times Electrical : More than 100 thousand times at rated switching voltage, current
	Surge suppressor	None
	Fuse	None
Terminal screw size		M3.5 screw
Applicable wire size		0.75 to 2mm^2
Applicable solderless terminal		RAV1.25 - 3.5, RAV2 - 3.5, thickness 0.8mm or less. Two solderless terminals can be connected to one terminal.
Applicable tightening torque		0.66 to 0.89N•m

Item		Performance Specifications
		Q61SP
External dimensions	H	98mm
	W	27.4mm
	D	104mm
Weight		0.18kg

*1 For the descriptions of the specification items, refer to Page 229, Section 7.2.2.

Item		Performance Specifications
		Q63RP
Base unit position		Power supply module mounting slot
Applicable base unit		Q3□RB, Q3□RB, Q6□WRB
Input power supply		24V DC(-35%/+30%) (15.6 to 31.2V DC)
Max. input power		65W
Inrush current		150A within 1ms
Rated output current	5VDC	8.5A
	24VDC	----
Overcurrent protection*1	5VDC	9.35A or more
	24VDC	----
Overvoltage protection*1	5VDC	5.5 to 6.5V
	24VDC	----
Efficiency		65% or more
Allowable momentary power failure time*1		Within 10ms (at 24V DC input)
Dielectric withstand voltage		510VAC per minute (altitude 0 to 2000m) Between the combined "line input/LG terminals" and the "FG terminal and output"
Insulation resistance		10MΩ or more by insulation resistance tester
Noise durability		By noise simulator of 500Vp-p noise voltage, 1μs noise width and 25 to 60Hz noise frequency
Operation indication		LED indication*2 (Normal operation: On (green) Error: Off (red)
Fuse		Built-in (User-unchangeable)
Contact output section	Application	$\overline{\text{ERR.}}$ contact (☞ Page 204, Section 7.1)
	Rated switching voltage, current	24VDC, 0.5A
	Minimum switching load	5VDC, 1mA
	Response time	OFF to ON: 10ms max. ON to OFF: 12ms max.
	Life	Mechanical : More than 20 million times Electrical : More than 100 thousand times at rated switching voltage, current
	Surge suppressor	None
	Fuse	None
Terminal screw size		M3.5 Screw
Applicable wire size		0.75 to 2mm^2
Applicable solderless terminal		R1.25-3.5, R2-3.5, RAV1.25-3.5, RAV2-3.5, thickness 0.8mm or less. Two solderless terminals can be connected to one terminal.
Applicable tightening torque		0.66 to 0.89N•m
External dimensions	H	98mm
	W	83mm
	D	115mm
Weight		0.60kg

*1 For the descriptions of the specification items, refer to Page 229, Section 7.2.2.

*2 Although the POWER LED momentarily turns on in red immediately after the power supply is turned on or off, the Q63RP is not faulty.

Item			Performance Specifications	
			Q64RPN	Q64RP
Mounting position			Power supply module mounting slot	
Applicable base unit			Q3□RB, Q6□RB, Q6□WRB*3	
Input power supply			100 to 240VAC +10% -15% (85 to 264VAC)	100 to 120VAC/200 to 240VAC +10% -15% (85 to 132VAC/170 to 264VAC)
Input frequency			50/60Hz ±5%	
Input voltage distortion factor			Within 5% (☞ Page 105, Section 4.8.1)	
Max. input apparent power			160VA	
Inrush current*1			20A within 8ms	
Rated output current		5VDC	8.5A	
		24VDC	----	
Overcurrent protection*1		5VDC	9.35A or more	
		24VDC	----	
Overvoltage protection*1		5VDC	5.5 to 6.5V	
		24VDC	----	
Efficiency			70% or more	65% or more
Allowable momentary power failure time*1			Within 20ms	
Dielectric withstand voltage			2300VAC per minute (altitude 0 to 2000m) Between the combined "line input/LG terminals" and the "FG terminal and output"	
Insulation resistance			10MΩ or higher by 500VDC insulation resistance tester Between the combined "line input/LG terminals" and the "FG terminal and output", the line input and LG terminals, the output and FG terminals	
Noise durability			• By noise simulator of 1500Vp-p noise voltage, 1μs noise width and 25 to 60Hz noise frequency • Noise voltage IEC 61000-4-4, 2kV	
Operation indication			LED indication (Normal: ON (green), Error: ON (red))*2*4	
Fuse			Built-in (User-unchangeable)	
Contact output section	Application		$\overline{\text{ERR.}}$ contact (☞ Page 204, Section 7.1)	
	Rated switching voltage, current		24VDC, 0.5A	
	Minimum switching load		5VDC, 1mA	
	Response time		OFF to ON: 10ms max. ON to OFF: 12ms max.	
	Life		Mechanical : More than 20 million times Electrical : More than 100 thousand times at rated switching voltage, current	
	Surge suppressor		None	
	Fuse		None	
Terminal screw size			M3.5 screw	
Applicable wire size			0.75 to 2mm^2	
Applicable solderless terminal			R1.25-3.5, R2-3.5, RAV1.25-3.5, RAV2-3.5	
Applicable tightening torque			0.66 to 0.89N•m	

Item		Performance Specifications	
		Q64RPN	Q64RP
External dimensions	H	98mm	
	W	83mm	
	D	115mm	
Weight		0.49kg	0.47kg

*1 For the descriptions of the specification items, refer to Page 229, Section 7.2.2.

*2 Although the POWER LED momentarily turns on in red immediately after the power supply is turned on or off, the Q64RPN or Q64RP are not faulty.

*3 When mounting the Q64RP to the Q65WRB, use the Q64RP whose first 6 digits of serial No. is "081103" or later. The vibration condition described in the general specifications may not be met if the serial number (first six digits) of the Q64RP is "081102" or earlier is mounted.

*4 During the operation for the Q64RP, do not allow the input voltage to change from 200VAC level (170 to 264VAC) to 100VAC level (85 to 132VAC). (If changed, the POWER LED of the module turns red and the system operation stops.)

Item		Performance Specifications
		Q61P-D
Mounting position		Power supply module mounting slot
Applicable base unit		Q3□B, Q3□DB, Q6□B
Input power supply*2		100 to 240VAC $^{+10\%}_{-15\%}$ (85 to 264VAC)
Input frequency		50/60Hz ±5%
Input voltage distortion factor		Within 5% (☞ Page 105, Section 4.8.1)
Max. input apparent power		130VA
Max. input power		----
Inrush current*1		20A within 8ms
Rated output current	5VDC	6A
	24VDC	----
External output voltage		----
Overcurrent protection*1	5VDC	6.6A or more
	24VDC	----
Overvoltage protection*1	5VDC	5.5 to 6.5V
	24VDC	----
Efficiency		70% or more
Allowable momentary power failure time*1		Within 20ms
Dielectric withstand voltage		2300VAC per minute (altitude 0 to 2000m) Between the combined "line input/LG terminals" and the "FG terminal and output"
Insulation resistance		10MΩ or higher by 500VDC insulation resistance tester Between the combined "line input/LG terminals" and the "FG terminal and output", the line input and LG terminals, the output and FG terminals
Noise durability		• By noise simulator of 1500Vp-p noise voltage, 1μs noise width and 25 to 60Hz noise frequency • Noise voltage IEC 61000-4-4, 2KV
Operation indication		LED indication (POWER LED, LIFE LED) (☞ Page 235, Section 7.2.5)
Fuse		Built-in (User-unchangeable)
Contact output section	Application	$\overline{\text{ERR.}}$ contact, $\overline{\text{LIFE OUT}}$ contact (☞ Page 204, Section 7.1)
	Rated switching voltage, current	24VDC, 0.5A
	Minimum switching load	5VDC, 1mA
	Response time	OFF to ON: 10ms max. ON to OFF: 12ms max.
	Life	Mechanical : More than 20 million times Electrical : More than 100 thousand times at rated switching voltage, current
	Surge suppressor	None
	Fuse	None
Terminal screw size		M3.5
Applicable wire size		0.75 to 2mm^2
Applicable solderless terminal		RAV1.25 - 3.5, RAV2 - 3.5, thickness 0.8mm or less. Two solderless terminals can be connected to one terminal.

Item		Performance Specifications
		Q61P-D
Applicable tightening torque		0.66 to 0.89N•m
External dimensions	H	98mm
	W	55.2mm
	D	90mm
Weight		0.45kg

*1 For the descriptions of the specification items, refer to Page 229, Section 7.2.2.

*2 When using the Q61P-D in the system configured with an A/AnS series module, the power supply modules mounted on the main base unit and extension base unit must be turned on and off simultaneously.

Item		Performance Specifications	
		Q00JCPU (Power supply part)	Q00UJCPU (Power supply part)
Input power supply		100 to 240VAC $^{+10\%}_{-15\%}$ (85 to 264VAC)	
Input frequency		50/60Hz ±5%	
Input voltage distortion factor		Within 5% (☞ Page 105, Section 4.8.1)	
Max. input apparent power		105VA	
Inrush current*1		40A within 8ms	
Rated output current	5VDC	3A	
Overcurrent protection*1	5VDC	3.3A or more	
Overvoltage protection*1	5VDC	5.5 to 6.5V	
Efficiency		65% or more	
Allowable momentary power failure time*1		Within 20ms (100VAC or more)	
Dielectric withstand voltage		2300VAC per minute (altitude 0 to 2000m) Between the combined "line input/LG terminals" and the "FG terminal and output"	
Insulation resistance		10MΩ or higher by 500VDC insulation resistance tester Between the combined "line input/LG terminals" and the "FG terminal and output", the line input and LG terminals, the output and FG terminals	
Noise durability		• By noise simulator of 1500Vp-p noise voltage, 1μs noise width and 25 to 60Hz noise frequency • Noise voltage IEC61000-4-4, 2KV	
Operation indication		LED indication (The POWER LED of the CPU part: Normal: On (green), Error: Off)	
Fuse		Built-in (User-unchangeable)	
Contact output section		None	
Terminal screw size		M3.5×7	
Applicable wire size		0.75 to 2mm^2	
Applicable solderless terminal		RAV1.25 - 3.5, RAV2 - 3.5, thickness 0.8mm or less. Two solderless terminals can be connected to one terminal.	
Applicable tightening torque		0.66 to 0.89N•m	
External dimensions		☞ Page 147, Section 6.2	
Weight			

*1 For the descriptions of the specification items, refer to Page 229, Section 7.2.2.

Item		Performance Specifications		
		A1S61PN	A1S62PN	A1S63P
Mounting position		Power supply module mounting slot		
Applicable base unit		QA1S6□B		
Input power supply		100 to 240VAC $^{+10\%}_{-15\%}$ (85 to 264VAC)		24VDC $^{+30\%}_{-35\%}$ (15.6 to 31.2VDC)
Input frequency		50/60Hz ±5%		----
Input voltage distortion factor		Within 5% (☞ Page 105, Section 4.8.1)		---
Max. input apparent power		105VA		----
Max. input power		----		41W
Inrush current		20A within 8ms*1		81A within 1ms
Rated output current	5VDC	5A	3A	5A
	24VDC	----	0.6A	----
Overcurrent protection*1	5VDC	5.5A or more	3.3A or more	5.5A or more
	24VDC	----	0.66A or more	----
Overvoltage protection*1	5VDC	5.5 to 6.5V		
	24VDC	----		
Efficiency		65% or more		
Allowable momentary power failure time*1		Within 20ms		Within 10ms (at 24VDC input)
Dielectric withstand voltage		2300VAC per minute (altitude 0 to 2000m) Between the combined "line input/LG terminals" and the "FG terminal and output"		510VAC per minute (altitude 0 to 2000m) Between the combined "line input/LG terminals" and the "FG terminal and output"
Insulation resistance		Between inputs and outputs (LG and FG separated), between inputs and LG/FG, between outputs and FG/LG 10MΩ or more by 500VDC insulation resistance tester		5MΩ or more by insulation resistance tester
Noise durability		• By noise simulator of 1500Vp-p noise voltage, 1μs noise width and 25 to 60Hz noise frequency • Noise voltage IEC 61000-4-4, 2KV		By noise simulator of 500Vp-p noise voltage, 1μs noise width and 25 to 60Hz noise frequency
Operation indication		LED indication (Normal: On (green), Error: Off)		
Fuse		Built-in (User-unchangeable)		
Contact output section		None		
Terminal screw size		M3.5 screw		
Applicable wire size		0.75 to 2mm^2		
Applicable solderless terminal		RAV1.25 - 3.5, RAV2 - 3.5, thickness 0.8mm or less. Two solderless terminals can be connected to one terminal.		
Applicable tightening torque		0.66 to 0.89N•m		
External dimensions	H	130mm		
	W	55mm		
	D	93.6mm		
Weight		0.60kg		0.50kg

*1 For the descriptions of the specification items, refer to Page 229, Section 7.2.2.

Item		Performance Specifications			
		A61P	A61PN	A62P	A63P
Mounting position		Power supply module mounting slot			
Applicable base unit		QA6□B			
Input power supply		100VAC to 120VAC $^{+10\%}_{-15\%}$ (85VAC to 132VAC)			24VDC $^{+30\%}_{-35\%}$ (15.6VDC to 31.2VDC)
		200VAC to 240VAC $^{+10\%}_{-15\%}$ (170VAC to 264VAC)			
Input frequency		50/60Hz ±5%			–
Input voltage distortion		Within 5% (☞ Page 105, Section 4.8.1)			–
Max. input apparent power		160VA		155VA	65W
Inrush current		20A, 8ms or less*1			100A, 1ms or less
Rated output current	5VDC	8A		5A	8A
	24VDC	–		0.8A	–
Overcurrent protection*1	5VDC	8.8A or more		5.5A or more	8.5A or more
	24VDC	–		1.2A or more	–
Overvoltage protection*1	5VDC	5.5 to 6.5V		5.5 to 6.5V	5.5 to 6.5V
	24VDC	–			
Efficiency		65% or more			
Dielectric withstand voltage		Between AC external terminals and ground, 1500V AC, 1 minute Between DC external terminals and ground, 500V AC, 1 minute			
Noise durability		By noise simulator of 1500Vp-p noise voltage, noise width 1μs, and 25 to 60Hz noise frequency			By noise simulator of 500Vp-p noise voltage, noise width 1μs, and 25 to 60Hz noise frequency
Insulation resistance		Between AC external terminals and ground, 5MΩ or higher by 500VDC insulation resistance tester			
Power indicator		LED indication of power supply			
Terminal screw size		M4 × 0.7 × 6			
Applicable wire size		0.75 to 2mm^2			
Applicable solderless terminal		R1.25-4, R2-4 RAV1.25, RAV2-4			
Applicable tightening torque		78 to 118N•cm			
External dimensions	H	250mm			
	W	55mm			
	D	121mm			
Weight		0.98 kg	0.79 kg	0.94 kg	0.8 kg
Allowable momentary power failure time		20ms or less			1ms or less

*1 For the descriptions of the specification items, refer to Page 229, Section 7.2.2.

Item		Performance specifications	
		A61PEU	A62PEU
Mounting position		Power supply module mounting slot	
Applicable base unit		QA6□B	
Input power supply		100 to 120/200 to 240VAC +10%/-15%	
Input frequency		50/60Hz ±5%	
Input voltage distortion		Within 5% (☞ Page 105, Section 4.8.1)	
Max. input apparent power		130VA	155VA
Inrush current*1		20A, 8ms or less	
Rated output current	5VDC	8A	5A
	24VDC	–	0.8A
Overcurrent protection*1	5VDC	8.8A or more	5.5A or more
	24VDC	–	1.2A or more
Overvoltage protection*1	5VDC	5.5 to 6.5V	–
	24VDC	–	
Efficiency		65% or more	
Dielectric withstand voltage	Between primary side and FG	2300VAC/1min (at a height of 0 to 2000m above sea level)	
Noise durability		By noise simulator of noise voltage IEC 801-4, 2KV, 1500Vp-p, noise width 1μs, and noise frequency 25 to 60Hz	
Power indicator		LED indication of power supply	
Terminal screw size		M4 × 0.7 × 6	
Applicable wire size		0.75 to 2mm^2	
Applicable solderless terminal		RAV1.25-4, RAV2-4	
Applicable tightening torque		98 to 137N•cm	
External dimensions	H	250mm	
	W	55mm	
	D	121mm	
Weight		0.8 kg	0.9 kg
Allowable momentary power failure time*1		20ms or less	

*1 For the descriptions of the specification items, refer to Page 229, Section 7.2.2.

Item		Performance Specifications
		A68P
Mounting position		I/O module slot
Number of occupied points		2 slots occupied, 1 slot 16 points
Input voltage		100 to 120V AC$^{+10\%}_{-15\%}$ (85 to 132V AC)
		200 to 240V AC$^{+10\%}_{-15\%}$ (170 to 264V AC)
Input frequency		50/60Hz ±5%
Max. input apparent power		95VA
Inrush current		20A, within 8ms
Rated output current	+15VDC	1.2A
	-15VDC	0.7A
Overcurrent protection*1	+15VDC	1.64A or more
	-15VDC	0.94A or more
Efficiency		65% or more
Power indicator		Power LED display (Normal: On (green), error: Off)
Power ON output		Contact output
		Switched on if +15V DC output is +14.25V or higher or -15V DC output is -14.25V or lower.
		Min. contact switching load: 5V DC, 10mA Min. contact switching load: 264V AC (R load)
Terminal screw size		M3 × 0.5 × 6
Applicable wire size		0.75 to 2mm^2
Solderless terminal		V1.25 - 4, V2 - YS4A, V2 - S4, V2 - YS4A
Applicable tightening torque		68N•cm
External dimensions	H	250mm
	W	75.5mm
	D	121mm
Weight		0.9kg

*1 The overcurrent protection shuts off the +15VDC circuit if a current higher than the specified value flows in the circuit and:

- Both +15VDC and -15VDC are switched off if overcurrent has occurred at +15V; or
- -15VDC is switched off but +15V remains output if overcurrent has occurred at -15V; and
- The power supply module LED is switched off or dimly lit due to ±15VDC voltage drop.

If this device is activated, turn off the input power supply and eliminate the cause such as insufficient current capacity or short before restarting the system.

7.2.2 Specifications

(1) Overcurrent protection

The overcurrent protection device shuts off the 5V, 24VDC circuit and stops the system if the current flowing in the circuit exceeds the specified value. The LED of the power supply module turns off or turns on in dim green when voltage is lowered. (As for the redundant power supply module, the LED turns off or turns on in red.) If this device is activated, switch the input power supply off and eliminate the cause such as insufficient current capacity or short. Then, a few minutes later, switch it on to restart the system. The initial start for the system takes place when the current value becomes normal.

(2) Overvoltage protection

The overvoltage protection device shuts off the 5VDC circuit and stops the system if a voltage of 5.5VDC is applied to the circuit. When this device is activated, the power supply module LED turns off. If this happens, switch the input power off, then a few minutes later on. This causes the initial start for the system to take place. The power supply module must be changed if the system is not booted and the LED remains off (As for the redundant power supply module, the LED turns on in red).

(3) Allowable momentary power failure time

For AC input power supply

- If the momentary power failure time is within 20ms, the system detects an AC down and suspends the operation processing. However, the system continues operations after the power comes back.
- If the momentary power failure time exceeds 20ms, the system either continues or initially starts the operations depending on the power supply load. In case that the operation processing is continued, the system operates the same as when the momentary power failure time is within 20ms.
- Supplying the same amount of AC to both the power supply module and an AC input module (such as the QX10) can prevent a connected sensor from being turned off due to the momentary power failure.
  However, if only the power supply module and an AC input module are connected on the AC line, an AC down detection in the power supply module may be delayed due to the internal capacitor of the AC input module.
  To avoid this delaying, connect a load of approximately 30mA per AC input module on the AC line.
- During the system operation with two redundant power supply modules, the system does not initially start operations when the momentary power failure of 20ms or longer occurs in one of the AC input power supplies.
  However, the system may initially start operations when the momentary power failure of 20ms or longer occurs simultaneously in both AC input power supplies.

For DC input power supply

- If the momentary power failure time is within 10ms[*1], the system detects a 24VDC down and suspends the operation processing. However, the system continues operations after the power comes back.
- If the momentary power failure time exceeds 10ms[*1], the system either continues or initially starts the operations depending on the power supply load. In case that the operation processing is continued, the system operates the same as when the momentary power failure time is within 10ms.

*1 This is the time when 24VDC is input. If the input is less than 24VDC, the time will be less than 10ms.

(4) Inrush current

When power is switched on again immediately (within 5 seconds) after power-off, an inrush current of more than the specified value (2ms or less) may flow. Reapply power 5 or more seconds after power-off. When selecting a fuse and breaker in the external circuit, take account of the blowout, detection characteristics and above matters.

7.2.3 Selecting the power supply module

The power supply module is selected according to the total of current consumption of the base units, I/O modules, intelligent function module, special function module, and peripheral devices supplied by its power supply module.
For the internal current consumption of 5VDC of the base unit, refer to Page 239, CHAPTER 8.
For the internal current consumption of 5VDC of the I/O modules, intelligent function module, special function module, and peripheral devices, refer to the Manuals of their respective modules.
For the devices obtained by a user, see the manual for the respective device.

(1) When the base unit is Q3□B, Q3□DB or Q6□B:

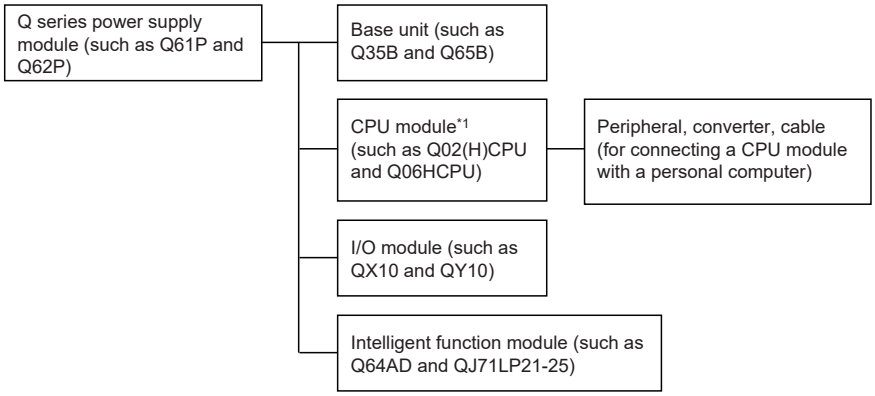

*1 The CPU module is mounted on the main base unit.

Keep the current consumption of the base unit (Q3□B, Q3□DB, and Q6□B) below the 5VDC rated output current of the Q series power supply module.

5VDC rated output current	Type
6.0A	Q61P-A1, Q61P-A2, Q61P, Q61P-D, Q63P
3.0A	Q62P
8.5A	Q64P, Q64PN

(a) Precaution on using the extension base unit (Q5□B, QA1S5□B)

When the Q5□B or QA1S5□B is used, a power of 5VDC is supplied from the power supply module on the main base unit through an extension cable.
Therefore, to use the Q5□B or QA1S5□B, pay attention to the following.

- Select a proper power supply module of 5VDC rated output current to be installed to the main base unit so that it will cover the current used by the Q5□B or QA1S5□B.
  For example, if current consumption is 3.0A on the main base unit and 1.0A on the Q5□B or QA1S5□B, any of the power supply modules shown in a table below must be mounted on the main base unit.

5VDC rated output current	Type
6.0A	Q61P-A1, Q61P-A2, Q61P, Q61P-D, Q63P
8.5A	Q64P, Q64PN

- Because 5VDC is supplied to the Q5□B or QA1S5□B through an extension cable, voltage is lowered in the extension cable.
  The power supply module and extension cable must be selected so that a voltage of 4.75VDC or higher is supplied to the "IN" connector of the Q5□B or QA1S5□B.
  For details of the voltage drop, refer to Page 90, Section 4.3.4.

(b) Methods for reducing voltage drops

The following methods are effective to reduce voltage drops at the extension cables.

1) Changing the module loading positions
   Load large current consumption modules on the main base unit.
   Load small current consumption modules on the extension base unit (Q5□B).
2) Using short extension cables
   The shorter the extension cable is, the smaller the resistance and voltage drops will be.
   Use the shortest possible extension cables.

(2) When the base unit is Q3□SB:

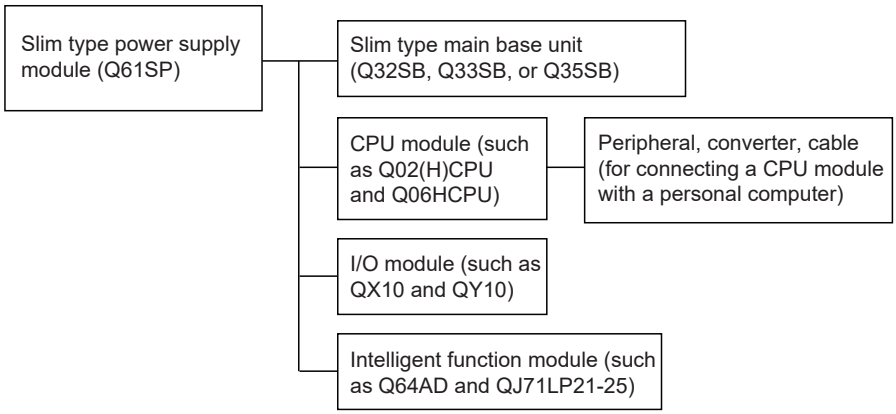

Keep the current consumption of the slim type main base unit (Q3□SB) not exceeding the 5VDC rated output current of the slim type power supply module (Q61SP).

5VDC Rated output current	Type
2.0A	Q61SP

(3) When the base unit is Q3□RB or Q6□RB

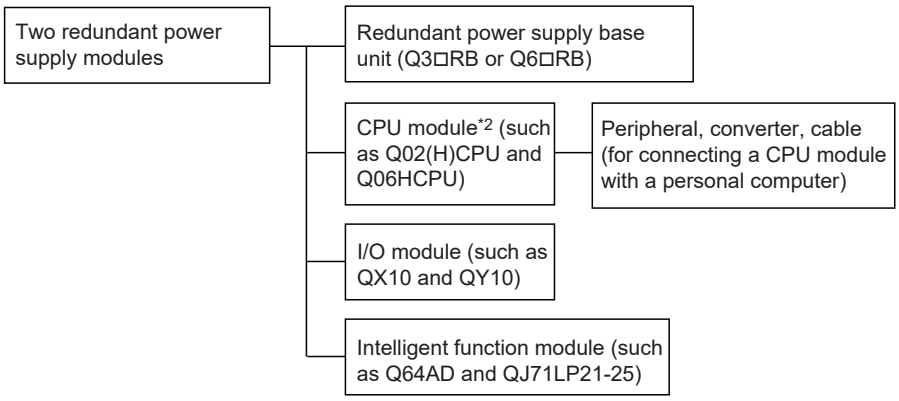

*2 The CPU module is mounted on the main base unit.

5VDC rated output current	Type
8.5A	Q63RP Q64RPN Q64RP

Point

When a redundant power supply system is configured and one redundant power supply module has failed, the system is operated using the other redundant power supply module only during replacement of the failed redundant power supply module.
Therefore, keep the current consumption of the redundant power supply base unit (Q3□RB/Q6□RB/Q6□WRB) within the 5VDC rated output current (8.5A) for one redundant power supply module.

(a) Cautions for using the extension base unit (Q5□B)

When Q5□B is used, a power of 5VDC is supplied from the redundant power supply module on the redundant power main base unit (Q3□RB) through an extension cable.
Pay attentions to the following to use Q5□B.

- Keep the sum of the current consumption on Q3□RB and Q5□B not exceeding the 5VDC rated output current for one redundant power supply module.
- Because 5VDC is supplied to Q5□B through an extension cable, voltage drop occurs in the extension cable.
  Select an appropriate extension cable so that a voltage of 4.75VDC or more is supplied at the "IN" connector of Q5□B.
  For details of the voltage drop, refer to Page 90, Section 4.3.4.

(b) Methods for reducing voltage drops

The following methods are effective to reduce voltage drops at the extension cables.

1) Changing the module mounting positions
   Mount a module with large current consumption on the redundant power main base unit (Q3□RB).
   Mount small current consumption modules on the extension base unit (Q5□B).
2) Using short extension cables
   The shorter the extension cable is, the smaller the resistance and voltage drops are.
   Use the shortest possible extension cables.

(4) When the base unit is QA1S6□B:

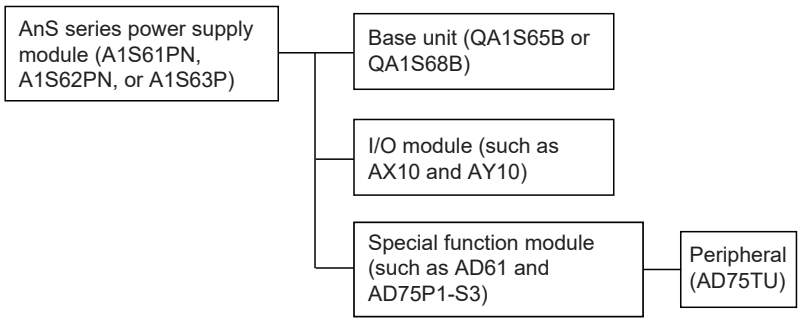

Select the power supply module also in consideration of the current consumption of the peripheral devices connected to the special function module.
For example, when the AD75TU is connected to the AD75P1-S3, the current consumption of the AD75TU must also be taken into account.

(5) When the base unit is QA6□B:

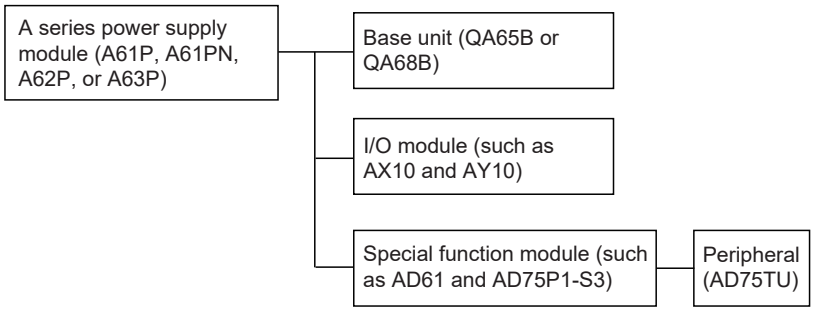

Select the power supply module also in consideration of the current consumption of the peripheral devices connected to the special function module.
For example, when the AD75TU is connected to the AD75P1-S3, the current consumption of the AD75TU must also be taken into account.

7.2.4 Precautions on power supply capacity

Select a power supply having enough power for a power supply module. (For an AC power supply module, the power capacity should be twice or more as great as the current consumption of the power supply module, and four times or more for a DC power supply module.)

(1) When the Q64RP or Q64P is used

The Q64RP and Q64P automatically recognize the rated input voltage waveform to switch the input voltage between 100VAC and 200VAC.
If the power supply of insufficient power capacity is selected, the power supply module might fail when 200VAC power is supplied.

7.2.5 Life detection power supply module

The Life detection power supply module estimates its remaining life internally and indicates the life. The remaining life of the module can be checked by the LIFE LED located on the front of the module and on/off of the $\overline{\text{LIFE OUT}}$ terminals.

(1) LED indication and module status during operation

The following table lists the LED indication and module status during operation.

LED		$\overline{\text{LIFE OUT}}$ terminal	Module
POWER	LIFE		
Off	Off	Off	• Power supply module failure • AC power is not input • Power failure (including momentary power failure for 20ms or more)
On (green)	On (green)	On	• Normal operation
On (green)	On (orange)		• Normal operation (Remaining life approx. 50%)*1
On (green)	Flash (orange) (On for 5 sec. and off for 1 sec.)	Off	• Normal operation (Remaining life approx. 1 year)*1 Replacement of the module is recommended
On (green)	Flash (orange) (At intervals of half a sec.)		• Normal operation (Remaining life approx. 6 months)*1
On (green)	Off		• Life expired
On (green)	On (red)	Turns off and on three times at intervals of 1 second and then off	• Ambient temperature is out of range (Ambient temperature is exceeding the specification)
On (green)	Flash (red) (At intervals of 1 sec.)		• Function failure (Normal processing is not available due to a failure of the life diagnostics circuit in the module)
On (green)	Off		• Ambient temperature is out of range (Ambient temperature is exceeding the specification and also the life detection function has stopped.)
Flash (orange)	Off	Off	• Watchdog timer error in the module

*1 The remaining life of the module varies depending on the ambient temperature.
(If the ambient temperature rose by 10°C, the remaining life of the module will be shortened by half.)

(2) Monitoring module life by using the $\overline{\text{LIFE OUT}}$ terminal

The module life can be monitored in either of the following way by using outputs of the $\overline{\text{LIFE OUT}}$ terminal

- Connecting the terminal to an external display device
- Obtaining the output status into an input module and monitoring it by GOT

(a) Connecting the terminal to an external display device

Connecting the $\overline{\text{LIFE OUT}}$ terminal allows indication of the remaining life of the module to an external display, device such as external LED, by turning it off when the life is one year or less.

When the external display device turned off, the remaining life can be checked by the LIFE LED of the Q61P-D located in the control panel.

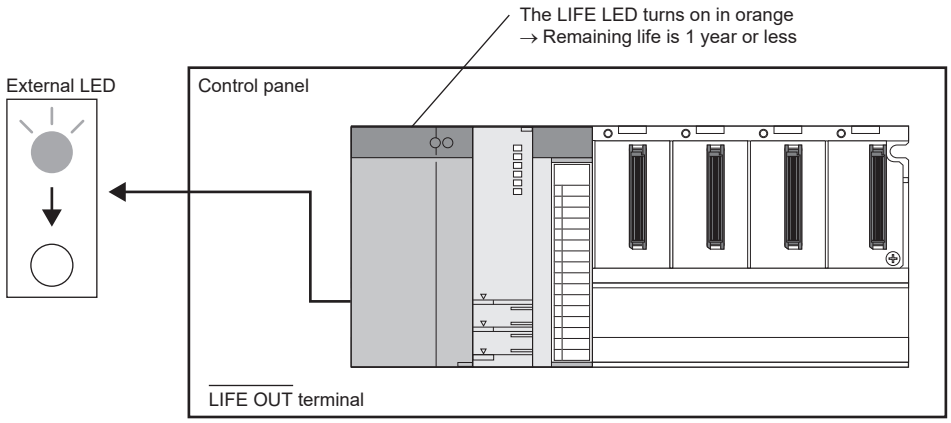

(b) Obtaining the output status into an input module and monitoring it by GOT

Obtaining the $\overline{\text{LIFE OUT}}$ terminal status into an input module allows monitoring of the module remaining life in a sequence program.

The following indicates how to monitor the remaining life of the power supply module in the sequence program by using GOT.

1) System configuration

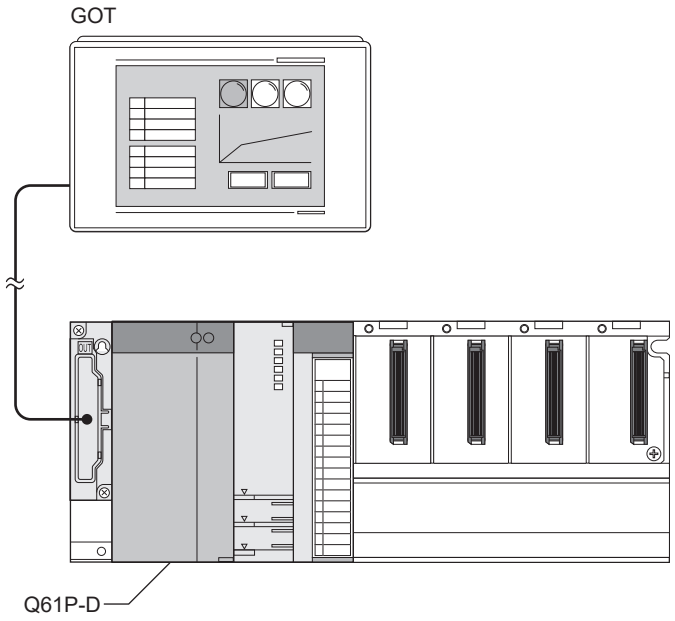

Model name	Start XY
Q02HPU	-
QX40	0000_H

2) Conditions of a program

The following tables list devices used in a program for monitoring the module life.

Signal	Device	Function
Monitoring clear command	X0F	Resets the life monitoring processing
Life warning signal	M11	Turns on when the remaining life of the Q61P-D is one year or less
Error signal	M12	Turns on when the life detection function of the Q61P-D is faulty

Signal	Device	Function
LIFE OUT signal	X00	$\overline{\text{LIFE OUT}}$ terminal status of the Q61P-D
Monitoring clear request	M0	An internal signal for resetting the life monitoring processing
Monitoring start flag	M1	An internal signal for detecting offs of the $\overline{\text{LIFE OUT}}$ terminal
Time monitoring flag	M2	An internal signal for counting on and off of the $\overline{\text{LIFE OUT}}$ terminal
ON/OFF monitoring timer	T0	On and off of the $\overline{\text{LIFE OUT}}$ terminal are counted while this timer is enabled (6 seconds)
ON/OFF counter	D100	Counts on and off of the $\overline{\text{LIFE OUT}}$ terminal

Point

When the life detection function of the Q61P-D is faulty, the $\overline{\text{LIFE OUT}}$ terminal repeats on and off for three times when the module is started.
Depending on the system, this behavior (on and off) of the $\overline{\text{LIFE OUT}}$ terminal may not be obtained to the input module due to delay of the sequence program start after the Q61P-D has started.
In this program example, M11 turns on even though the life detection function is faulty when powered on since the remaining life is regarded as one year.

3) Program example

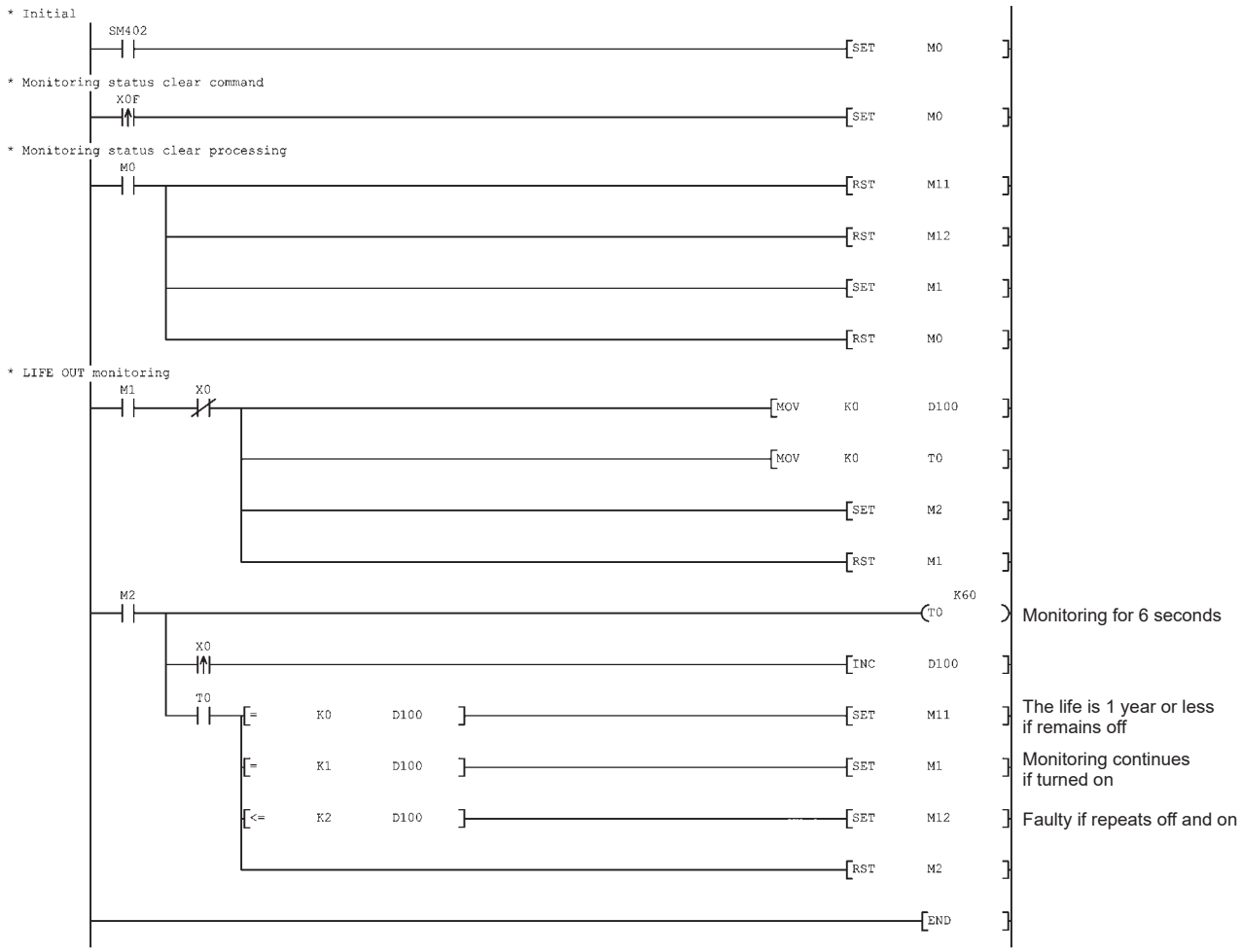

CHAPTER 8 BASE UNIT

This chapter describes base units that can be used in a programmable controller system.
Base units are to mount CPU modules, power supply modules, I/O modules, and intelligent function modules.

8.1 Part Names

The part names of the base units are described below.

(1) Main base unit (Q33B, Q35B, Q38B, Q312B)

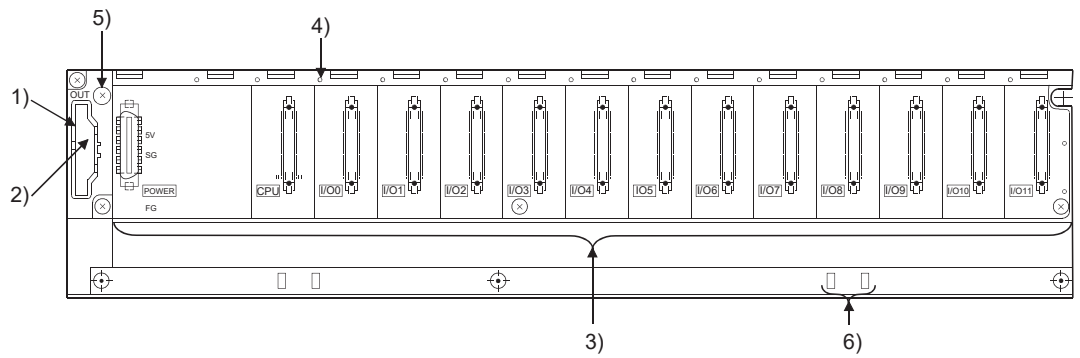

No.	Name	Application
1)	Extension cable connector	Connector for connecting an extension cable (for signal communications with the extension base unit)
2)	Base cover	Protective cover of extension cable connector. Before an extension cable is connected, the area of the base cover surrounded by the groove under the word "OUT" on the base cover must be removed with a tool such as nippers.
3)	Module connector	Connector for installing the Q series power supply module, CPU module, I/O modules, and intelligent function module. To the connectors located in the spare space where these modules are not installed, attach the supplied connector cover or the blank cover module (QG60) to prevent entry of dirt.
4)	Module fixing screw hole	Screw hole for fixing the module to the base unit. Screw size: M3 × 12
5)	Base unit installation hole	Hole for installing this base unit on a panel such as a control panel (for M4 screw)
6)	DIN rail adapter mounting hole	Hole for mounting DIN rail adapter

(2) Slim type main base unit (Q32SB, Q33SB, Q35SB)

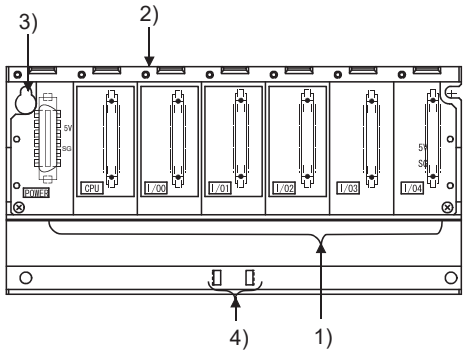

No.	Name	Application
1)	Module connector	Connector for installing the Q series power supply module, CPU module, I/O modules, and intelligent function module. To the connectors located in the spare space where these modules are not installed, attach the supplied connector cover or the blank cover module (QG60) to prevent entry of dirt.
2)	Module fixing screw hole	Screw hole for fixing the module to the base unit. Screw size: M3 × 12
3)	Base unit installation hole	Hole for installing this base unit on a panel such as a control panel (for M4 screw)
4)	DIN rail adapter mounting hole	Hole for mounting DIN rail adapter

(3) Redundant power main base unit (Q38RB)

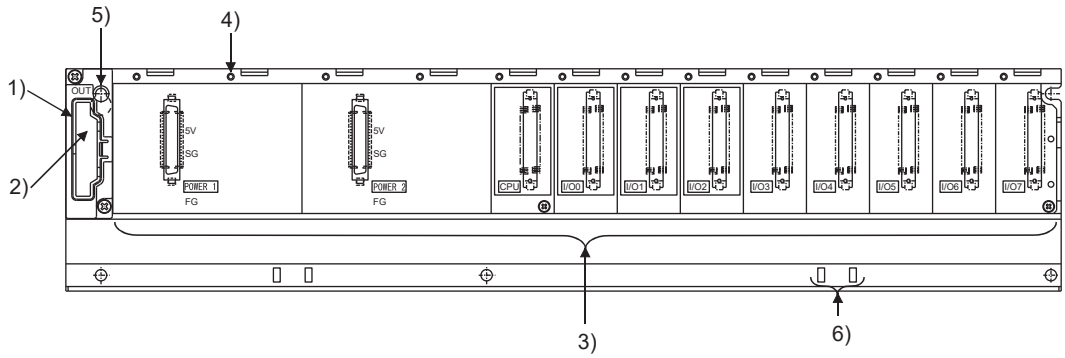

No.	Name	Application
1)	Extension cable connector	Connector for connecting an extension cable (for signal communications with the extension base unit)
2)	Base cover	Protective cover of extension cable connector. Before an extension cable is connected, the area surrounded by the groove under the word "OUT" must be removed with a tool such as a flat head screwdriver.
3)	Module connector	Connector for connecting a redundant power supply module, CPU module, I/O module and intelligent function module To the connectors unused, attach the supplied connector cover or the blank cover module (QG60) to prevent entry of dirt.
4)	Module fixing screw hole	Screw hole for fixing the module to the base unit. Screw size: M3 × 12
5)	Base unit installation hole	Hole for installing this base unit on a panel such as a control panel (for M4 screw)
6)	DIN rail adapter mounting hole	Hole for mounting DIN rail adapter

(4) Multiple CPU high speed main base unit (Q35DB, Q38DB, Q312DB)

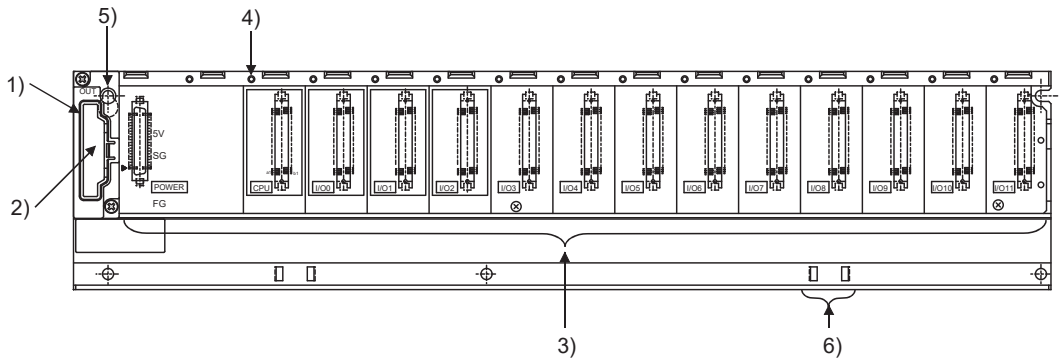

No.	Name	Application
1)	Extension cable connector	Connector for connecting an extension cable (for signal communications with the extension base unit)
2)	Base cover	Protective cover of extension cable connector. Before an extension cable is connected, the area of the base cover surrounded by the groove under the word "OUT" on the base cover must be removed with a tool such as nippers.
3)	Module connector	Connector for installing the Q series power supply module, CPU module, I/O modules, and intelligent function module. To the connectors located in the spare space where these modules are not installed, attach the supplied connector cover or the blank cover module (QG60) to prevent entry of dirt.
4)	Module fixing screw hole	Screw hole for fixing the module to the base unit. Screw size: M3 × 12
5)	Base unit installation hole	Hole for installing this base unit on a panel such as a control panel (for M4 screw)
6)	DIN rail adapter mounting hole	Hole for mounting DIN rail adapter

(5) Extension base unit (Q5□B, Q6□B, QA1S5□B, QA1S6□B, QA6□B)

Q52B, Q55B

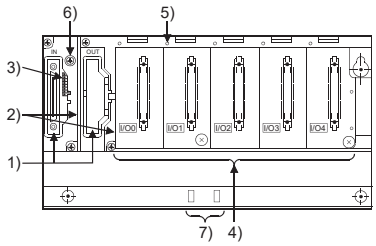

Q63B, Q65B, Q68B, Q612B

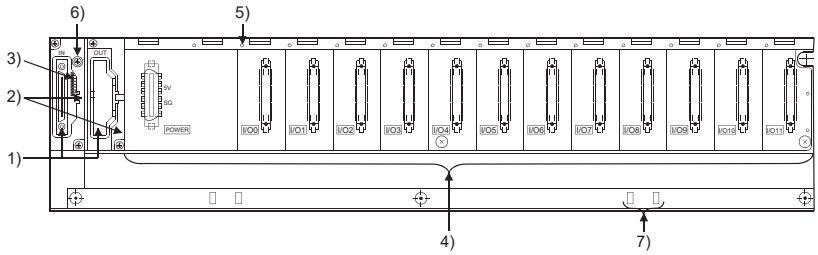

QA1S51B

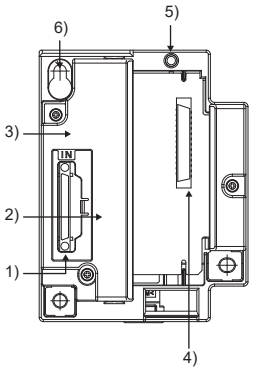

QA1S65B, QA1S68B

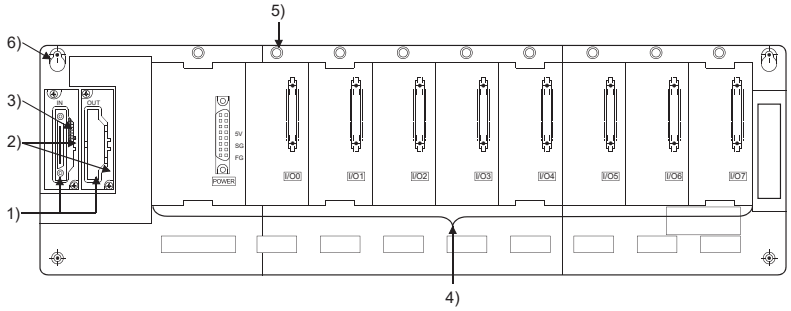

QA65B, QA68B

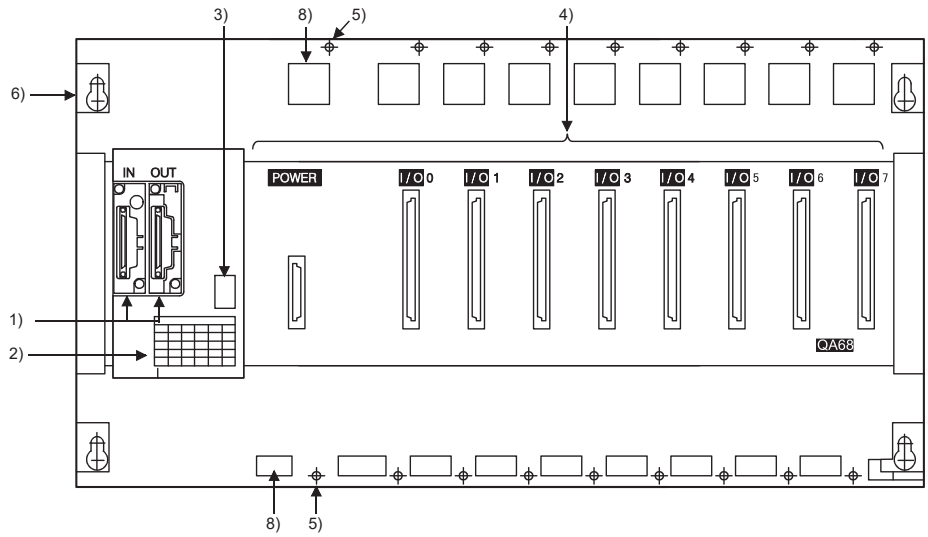

No.	Name	Application
1)	Extension cable connector	Connector for connecting an extension cable (for signal communications with the main base unit or other extension base unit)
2)	Base cover	Protective cover of extension cable connector. Before connecting an extension cable, the part under OUT on the base cover must be removed with a tool such as a flat blade screwdriver.
3)	Base No. setting connector	Connector for setting the number of bases of the extension base unit. (☞ Page 80, Section 4.3.1)
4)	Module connector	Connectors for installing the power supply module, I/O modules, and intelligent function module/ special function module. To those connectors located in the spare space where these modules are not installed, apply the supplied connector cover or the blank cover module to prevent entry of dirt. Blank cover module applicable to Q52B, Q55B, Q63B, Q65B, Q68B and Q612B: QG60 Blank cover module applicable to QA1S51B, QA1S65B and QA1S68B: A1SG60 Blank cover module applicable to QA65B and QA68B: AG60
5)	Module fixing screw hole	Screw hole for fixing the module to the base unit. Q52B, Q55B, Q63B, Q65B, Q68B and Q612B.....Screw size: M3 × 12 QA1S51B, QA1S65B, QA1S68B, QA65B and QA68B.....Screw size: M4 × 12
6)	Base unit installation hole	Hole for installing this base unit on a panel such as a control panel. Q52B, Q55B, Q63B, Q65B, Q68B and Q612B.....For M4 screw QA1S51B, QA1S65B, QA1S68B, QA65B and QA68B.....For M5 screw
7)	DIN rail adapter mounting hole	DIN rail adapter mounting hole.
8)	Module fixing hole	Cut out to accept projection and hook at rear of modules.

(6) Redundant power extension base unit (Q68RB)

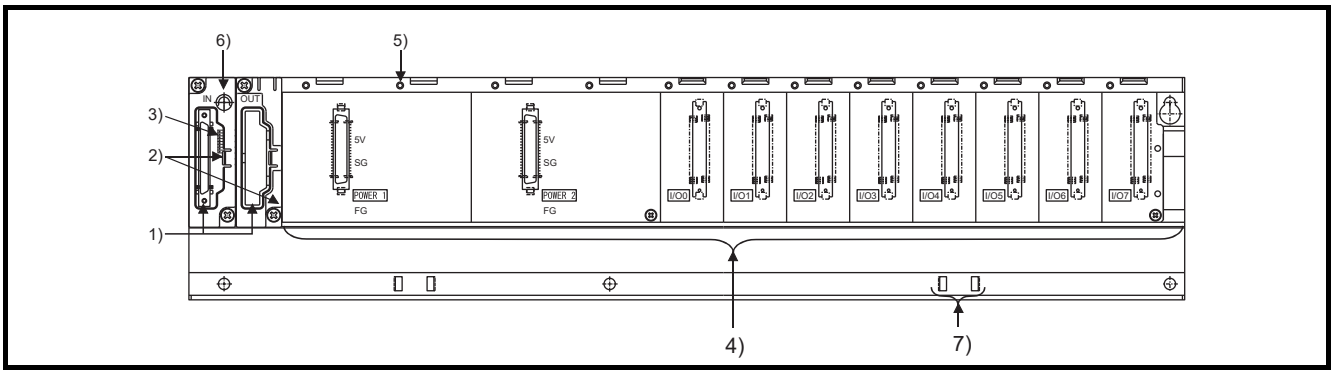

No.	Name	Application
1)	Extension cable connector	Connector for connecting an extension cable (for signal communications with the redundant power main base unit or other extension base unit)
2)	Base cover	Protective cover of extension cable connector. Before connecting an extension cable, the part under OUT on the base cover must be removed with a tool such as a flat blade screwdriver.
3)	Base No. setting connector	Connector for setting the number of bases of redundant power extension base units. (☞ Page 80, Section 4.3.1)
4)	Module connector	Connector for installing a redundant power supply module, I/O module and intelligent function module. To the connectors unused, attach the supplied connector cover or the blank cover module (QG60) to prevent entry of dirt.
5)	Module fixing screw hole	Screw hole for fixing the module to the base unit. Screw size: M3 × 12
6)	Base unit installation hole	Hole for installing this base unit on a panel such as a control panel. (For M4 screw)
7)	DIN rail adapter mounting hole	DIN rail adapter mounting hole.

(7) Redundant extension base unit (Q65WRB)

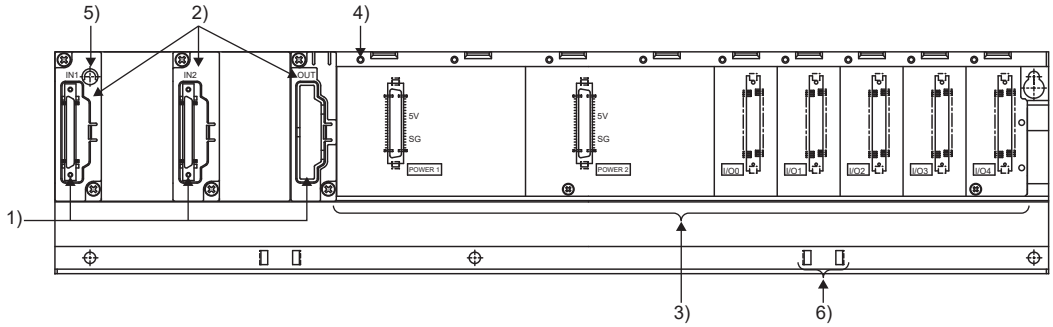

No.	Name	Application
1)	Extension cable connector	Connector for connecting an extension cable (for signal communications with the main base unit or extension base unit of the redundant system)
2)	Base cover	Protective cover of extension cable connector. Before connecting an extension cable, the part under OUT on the base cover must be removed with a tool such as a flat blade screwdriver.
3)	Module connector	Connector for installing a redundant power supply module, I/O module and intelligent function module. To the connectors unused, attach the supplied connector cover or the blank cover module (QG60) to prevent entry of dirt.
4)	Module fixing screw hole	Screw hole for fixing the module to the base unit. Screw size: M3 × 12
5)	Base unit installation hole	Hole for installing this base unit on a panel such as a control panel. (For M4 screw)
6)	DIN rail adapter mounting hole	DIN rail adapter mounting hole.

8.2 Extension Base Units that can be Combined with the Main Base Unit

This section introduces extension base units that can be combined with the main base unit.

For details of the CPU module and power supply modules, refer to the following.

CPU module: ☞ Page 121, CHAPTER 6

Power supply modules: ☞ Page 203, CHAPTER 7

For details on the system configuration, refer to Page 33, CHAPTER 2.

○: Combination available, ×: Combination not available

Main base unit	Extension base unit						
	Q52B Q55B	Q63B Q65B Q68B Q612B	Q68RB	Q65WRB*1	QA1S51B	QA1S65B QA1S68B *7	QA65B QA68B *2
Q00JCPU	○	○	×	×	×	×	×
Q00UJCPU	○	○	×	×	○*4	○*4	○*4
Q33B Q35B Q38B Q312B	○	○	○*3	○	○*5	○*5	○*5
Q32SB Q33SB Q35SB	×	×	×	×	×	×	×
Q38RB	○	×	○	○	×	×	×
Q35DB Q38DB Q312DB	○	○	×	×	○*6	○*6	○*6

*1 Applicable only in a redundant system.

*2 The same specifications are applied to the QA6ADP+A6□B.

*3 Available only for the 2nd extension base unit or later in a redundant system where the Redundant CPU whose serial number (first five digits) is "09012" or later is used.

*4 Available only when the serial number (first five digits) of the Q00UJCPU is "13102" or later is used.

*5 Available for the High Performance model QCPU and Universal model QCPU. When the Universal model QCPU is used, available only when the serial number (first five digits) is "13102" or later is used. (Not available for the QnUDPVCPU.)

*6 Available only when the Universal model QCPU whose serial number (first five digits) is "13102" or later is used. (Not available for the QnUDPVCPU.)
Not available for the High Performance QCPU.

*7 The same specifications are applied to the QA1S6ADP+A1S5□B/A1S6□B.

Point

Slim type main base units do not have a connector for extension cable. Therefore, connection of extension base units and GOT by bus is not available.

8.3 Specification Table

(1) Main base unit

Item		Type			
		Q33B	Q35B	Q38B	Q312B
Number of I/O modules installed		3	5	8	12
Possibility of extension		Extendable			
Applicable module		Q series modules			
5VDC internal current consumption		0.11A		0.12A	0.13A
Installation hole size		M4 screw hole or ϕ4.5 hole (for M4 screw)			
External dimensions	H	98mm			
	W	189mm	245mm	328mm	439mm
	D	44.1mm			
Weight		0.21kg	0.27kg	0.36kg	0.47kg
Attachment		Installation screw M4 × 14, 4 pieces*1 (DIN rail adapter is sold separately.)			
DIN rail adapter type		Q6DIN3	Q6DIN2	Q6DIN1	

*1 The Q38B and Q312B manufactured in August 2006 or later have five base unit installation holes.
Base unit installation screws equal to the number of holes are provided with the unit.

(2) Slim type main base unit

Item		Type		
		Q32SB	Q33SB	Q35SB
Number of I/O modules installed		2	3	5
Possibility of extension		Not extendable		
Applicable module		Q series modules		
5VDC internal current consumption		0.09A		0.10A
Installation hole size		M4 screw hole or ϕ4.5 hole (for M4 screw)		
External dimensions	H	98mm		
	W	114mm	142mm	197.5mm
	D	18.5mm		
Weight		0.12kg	0.15kg	0.21kg
Attachment		Installation screw M4 × 14, 4 pieces*1 (DIN rail adapter is sold separately.)		
DIN rail adapter type		Q6DIN3		

(3) Redundant power main base unit

Item		Type
		Q38RB
Number of I/O modules installed		8
Possibility of extension		Extendable
Applicable module		Q series modules
5VDC internal current consumption		0.12A
Installation hole size		M4 screw hole or ϕ4.5 hole (for M4 screw)
External dimensions	H	98mm
	W	439mm
	D	44.1mm
Weight		0.47kg
Attachment		Installation screw M4 × 14, 5 pieces (DIN rail adapter is sold separately.)
DIN rail adapter type		Q6DIN1

(4) Multiple CPU high speed main base unit

Item		Type		
		Q35DB	Q38DB	Q312DB
Number of I/O modules installed		5	8	12
Possibility of extension		Extendable		
Applicable module		Q series modules		
5VDC internal current consumption		0.23A	0.23A	0.24A
Installation hole size		M4 screw hole or ϕ4.5 hole (for M4 screw)		
External dimensions	H	98mm		
	W	245mm	328mm	439mm
	D	44.1mm		
Weight		0.32kg	0.41kg	0.54kg
Attachment		Installation screw M4 × 14, 4 pieces (DIN rail adapter is sold separately.)	Installation screw M4 × 14, 5 pieces (DIN rail adapter is sold separately.)	
DIN rail adapter type		Q6DIN2	Q6DIN1	

(5) Extension base unit (Type not requiring power supply module)

Item		Type		
		Q52B	Q55B	QA1S51B
Number of I/O modules installed		2	5	1
Possibility of extension		Extendable		Not extendable
Applicable module		Q series modules		AnS series modules
5VDC internal current consumption		0.08A	0.10A	0.12A
Installation hole size		M4 screw hole or ϕ4.5 hole (for M4 screw)		M5 screw hole or ϕ5.5 hole (for M5 screw)
External dimensions	H	98mm		130mm
	W	106mm	189mm	100mm
	D	44.1mm		50.7mm
Weight		0.14kg	0.23kg	0.23kg
Attachment		Installation screw M4 × 14, 4 pieces (DIN rail adapter is sold separately.)		Installation screw M5 × 25, 3 pieces
DIN rail adapter type		Q6DIN3		----

(6) Extension base unit (Type requiring power supply module)

Item		Type							
		Q63B	Q65B	Q68B	Q612B	QA1S65B	QA1S68B	QA65B	QA68B
Number of I/O modules installed		3	5	8	12	5	8	5	8
Possibility of extension		Extendable							
Applicable module		Q series modules				AnS series modules		A series module	
5VDC internal current consumption		0.11A		0.12A	0.13A	0.12A			
Installation hole size		M4 screw hole or ϕ4.5 hole (for M4 screw)				M5 screw hole or ϕ5.5 hole (for M5 screw)			
External dimensions	H	98mm				130mm		250mm	
	W	189mm	245mm	328mm	439mm	315mm	420mm	352mm	466mm
	D	44.1mm				51.2mm		46.6mm	
Weight		0.23kg	0.28kg	0.38kg	0.51kg	0.75kg	1.00kg	1.60kg	2.00kg
Attachment		Installation screw M4 × 14 , 4 pieces*1 (DIN rail adapter is sold separately.)				Installation screw M5 × 25 4 pieces		----	
DIN rail adapter type		Q6DIN3	Q6DIN2	Q6DIN1		----	----	----	----

*1 The Q68B and Q612B manufactured in August 2006 or later have five base unit installation holes. Base unit installation screws equal to the number of holes are provided with the unit.

(7) Redundant power extension base unit

Item		Type
		Q68RB
Number of I/O modules installed		8
Possibility of extension		Extendable
Applicable module		Q series modules
5VDC internal current consumption		0.12A
Installation hole size		M4 screw hole or ϕ4.5 hole (for M4 screw)
External dimensions	H	98mm
	W	439mm
	D	44.1mm
Weight		0.49kg
Attachment		Installation screw M4 × 14, 5 pieces (DIN rail adapter is sold separately.)
DIN rail adapter type		Q6DIN1

(8) Redundant extension base unit

Item		Type
		Q65WRB
Number of I/O modules installed		5
Possibility of extension		Extendable
Applicable module		Q series modules
5VDC internal current consumption		0.16A
Installation hole size		M4 screw hole or ϕ4.5 hole (for M4 screw)
External dimensions	H	98mm
	W	439mm
	D	44.1mm
Weight		0.52kg
Attachment		Installation screw M4 × 14, 5 pieces (DIN rail adapter is sold separately.)
DIN rail adapter type		Q6DIN1

CHAPTER 9 MEMORY CARD

This chapter describes the specifications of memory cards installed to CPU modules. Note 9.1
A memory card is used to store programs, file register data, and debug data of the trace function.
A memory card is also used to store file register data exceeding the number of points that can be stored in the standard RAM. (Page 147, Section 6.2)

9.1 Part Names

The part names of memory cards are described below.

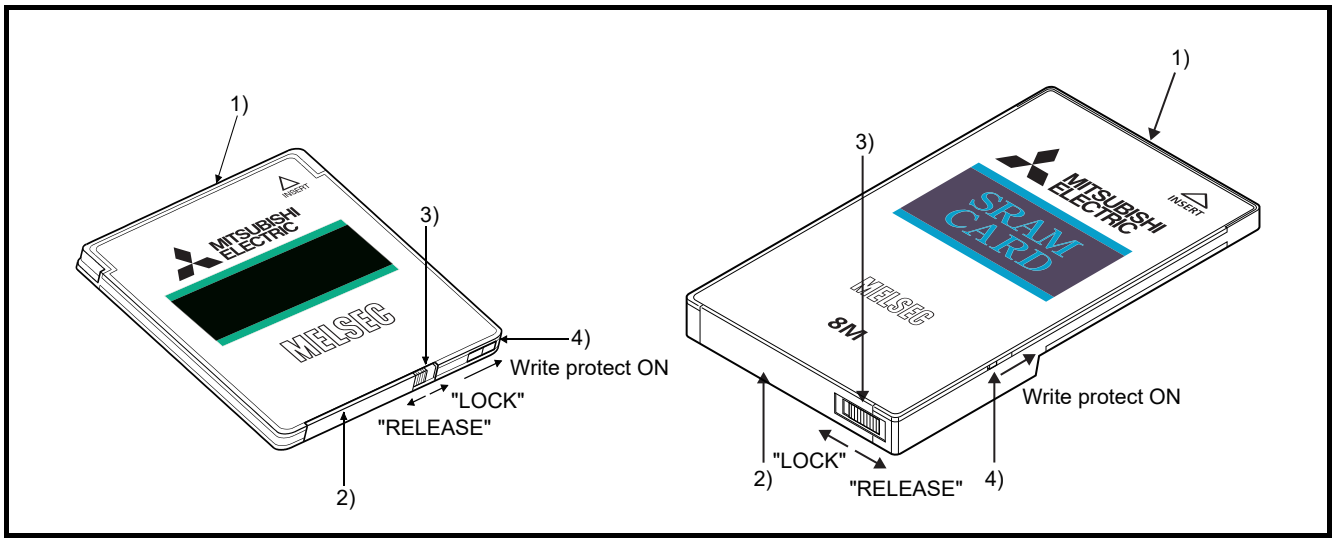

No.	Name	Application
1)	Connector area	An area connected to a CPU module
2)	Battery holder	Used to set the lithium battery for data backup of the SRAM memory (SRAM card only)
3)	Battery holder fixing switch*1	Switch for fixing the battery holder to the memory card. Locked at: LOCK position (write protect switch side) LOCK: Locked, RELEASE: Unlocked (SRAM card only)
4)	Write protect switch	Prevents the data in a memory card from being erased or modified. (Factory default: Off, SRAM card and Flash card only) On: Write-protected Off: Not write-protected (Data can be written to a memory card.)

*1 The battery holder fixing switch is returned automatically from the RELEASE to LOCK position when the battery holder is disconnected.

Note 9.1 Basic Universal

The Basic model QCPU, Q00U(J)CPU, Q01UCPU, QnUDVCPU, and QnUDPVCPU do not support the use of a memory card.

9.1.1 List of usable memory cards

Three types of memory cards (SRAM card, Flash card, and ATA card) are available.
Memory cards available for each CPU module are shown in the following table.

○: Usable, ×: Not usable

Memory card[*1]		CPU module					
		Q00JCPU Q00CPU Q01CPU	Q02CPU Q02HCPU Q06HCPU Q12HCPU Q25HCPU	Q02PHCPU Q06PHCPU Q12PHCPU Q25PHCPU	Q12PRHCPU Q25PRHCPU	Q00UJCPU Q00UCPU Q01UCPU	Q02UCPU Q03UD(E)CPU Q04UD(E)HCPU Q06UD(E)HCPU Q10UD(E)HCPU Q13UD(E)HCPU Q20UD(E)HCPU Q26UD(E)HCPU Q50UDEHCPU Q100UDEHCPU
SRAM card	Q2MEM-1MBSN Q2MEM-1MBS	×	○	○	○	×	○
	Q2MEM-2MBSN Q2MEM-2MBS	×	○	○	○	×	○
	Q3MEM-4MBS	×	○[*2]	○[*2]	○[*2]	×	○
	Q3MEM-8MBS	×	×	×	×	×	○
Flash card	Q2MEM-2MBF	×	○	○	○	×	○
	Q2MEM-4MBF	×	○	○	○	×	○
ATA card	Q2MEM-8MBA	×	○	○	○	×	○
	Q2MEM-16MBA	×	○	○	○	×	○
	Q2MEM-32MBA	×	○	○	○	×	○

*1 Only one memory card can be installed for each CPU module.
*2 CPU modules whose serial number (first five digits) of "16020" or earlier do not support the Q3MEM-4MBS.

Point

Storable data vary depending on the type of memory card.
For the data that can be stored on memory cards, refer to the following.
Manuals for the CPU module used (Function Explanation, Program Fundamentals)

9.2 Specifications

9.2.1 Memory card specifications

The specifications of memory cards applicable for CPU modules are compliant with those of PCMCIA small PC cards.

(1) SRAM card

Item		Type			
		Q2MEM-1MBSN Q2MEM-1MBS	Q2MEM-2MBSN Q2MEM-2MBS	Q3MEM-4MBS	Q3MEM-8MBS
Capacity after formatted		1011.5K bytes	2034K bytes	4078K bytes	8172K bytes
Number of storable files		255	287	319	
Number of insertions and removals		5000 times			
External dimensions	H	45mm		74mm	
	W	42.8mm			
	D	3.3mm		8.1mm	
Weight		15g		30g	31g

(2) Flash card

Item		Type	
		Q2MEM-2MBF	Q2MEM-4MBF
Capacity		2035K bytes	4079K bytes
Number of storable files		288	
Number of insertions and removals		5000 times	
Number of writings		100000 times	
External dimensions	H	45mm	
	W	42.8mm	
	D	3.3mm	
Weight		15g	

(3) ATA card

Item		Type		
		Q2MEM-8MBA	Q2MEM-16MBA*2	Q2MEM-32MBA
Capacity after formatted		7982K bytes*1	15982K bytes*1	31854K bytes
Number of storable files		512*2		
Number of insertions and removals		5000 times		
Number of writings		1000000 times		
External dimensions	H	45mm		
	W	42.8mm		
	D	3.3mm		
Weight		15g		

*1 The size of ATA cards after formatting will be as follows when the manufacturer control number of the card is E or earlier.
Manufacturer control number E: Q2MEM-8MBA: 7948K bytes, Q2MEM-16MBA: 15948K bytes
Manufacturer control number D or earlier: Q2MEM-8MBA: 7940k bytes, Q2MEM-16MBA: 15932K bytes
For the manufacturer control number, refer to "POINT" in this section.

*2 Up to 511 files can be stored in the Universal model QCPU.

Point

When the ATA card is used, the value stored in the special register SD603 differs depending on the manufacturer control number and CPU module type.
When the CPU module is the Universal model QCPU, the ATA card size is stored in SD603 in units of K bytes.
When the module is not the Universal model QCPU, 8000, 16000, or 32000 is stored in SD603, and the value depends on the manufacturer control number and CPU module type.

Manufacturer control No. and ATA card type		Value stored in special register SD603		
		Other than the Universal model QCPU		Universal model QCPU
		Serial No. (first 5 digits) is 09011 or earlier	Serial No. (first 5 digits) is 09012 or later	
"□□□" and "□□D□" or earlier	Q2MEM-8MBA	8000	8000	ATA card size (K bytes)
	Q2MEM-16MBA	16000	16000	
	Q2MEM-32MBA	32000	32000	
"□□E□"	Q2MEM-8MBA	16000	8000	
	Q2MEM-16MBA	16000	16000	
	Q2MEM-32MBA	32000	32000	
"□□F□" or later	Q2MEM-8MBA	32000	16000	
	Q2MEM-16MBA	32000	32000	
	Q2MEM-32MBA	32000	32000	

The manufacturer control number (the third digit from the left) of the ATA card is described in the label on the back of the ATA card. (Refer to the following figure.)
When character string including the manufacturer control number is 4 digits, the third digit from the left is the manufacturer control number, and when it is 3 digits, the manufacturer control number is "B".

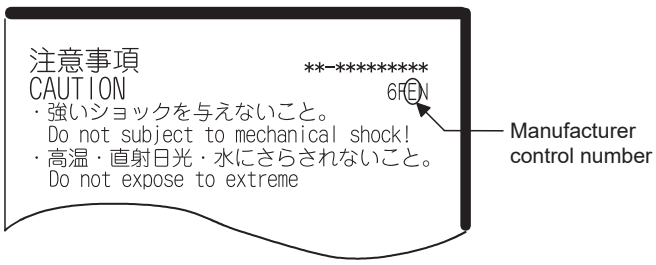

9.2.2 Specifications of the memory card battery

This section describes the specifications of the battery used for the memory card (SRAM card).

Item	Type	
	Q2MEM-BAT	Q3MEM-BAT
Classification	Graphite fluoride lithium primary battery	Manganese dioxide lithium primary battery
Initial voltage	3.0V	3.0V
Nominal current	48mAh	550mAh
Battery life when stored	Actually 5 years (room temperature)	
Battery life when used	Page 651, Appendix 4.3	
Lithium content	0.014g	0.150g
Application	Power failure backup for SRAM card (for Q2MEM-1MBSN, Q2MEM-1MBS, Q2MEM-2MBSN, and Q2MEM-2MBS)	Power failure backup for SRAM card (for Q3MEM-4MBS and Q3MEM-8MBS)

Remark

- For the life of the memory card battery, refer to Page 651, Appendix 4.3.
- For the battery directive in EU member states, refer to Page 701, Appendix 12.

9.3 Handling

(1) Formatting a memory card

An SRAM or ATA card must have been formatted to be installed to the CPU module.

Since the SRAM or ATA card purchased is not yet formatted, format it using a programming tool before use.

(Formatting is not necessary for Flash cards.)

For formatting, refer to the following.

Operating manual for the programming tool used

Point

Do not format an ATA card other than by the programming tool.

(If formatted using format function of Microsoft® Windows® Operating System, the ATA card may not be usable in a CPU module.)

(2) Installing a battery to an SRAM card

A battery used to backup for power failure is supplied with the SRAM card.

Before using the SRAM card, install the battery.

Point

Note that the SRAM card memory is not backed up by the CPU module battery only.

Also, the program memory, standard RAM, and latch devices of the CPU module are not backed up by the battery installed on the SRAM card.

(3) Storable files

For the files that can be stored on each memory card, refer to the following.

Manuals for the CPU module used (Function Explanation, Program Fundamentals)

(4) Precautions for installing/removing a memory card during power-on

Note that the data in a memory card may be damaged if the procedures described in Page 99, Section 4.5 (3) and Page 99, Section 4.5 (4) are not followed. If the operating status of the CPU module at the time of an error is set to "Stop" in parameter, the CPU module stops its operation upon the occurrence of "ICM.OPE.ERROR".

9.3.1 Battery installation into the memory card

Installation method of the battery for the memory card (SRAM card)

The battery for the SRAM card is removed from the battery holder when shipping.

Before inserting the SRAM card into the CPU module, set the battery holder as shown in the following flowchart.

(1) For Q2MEM-1MBSN, Q2MEM-1MBS, Q2MEM-2MBSN, and Q2MEM-2MBS

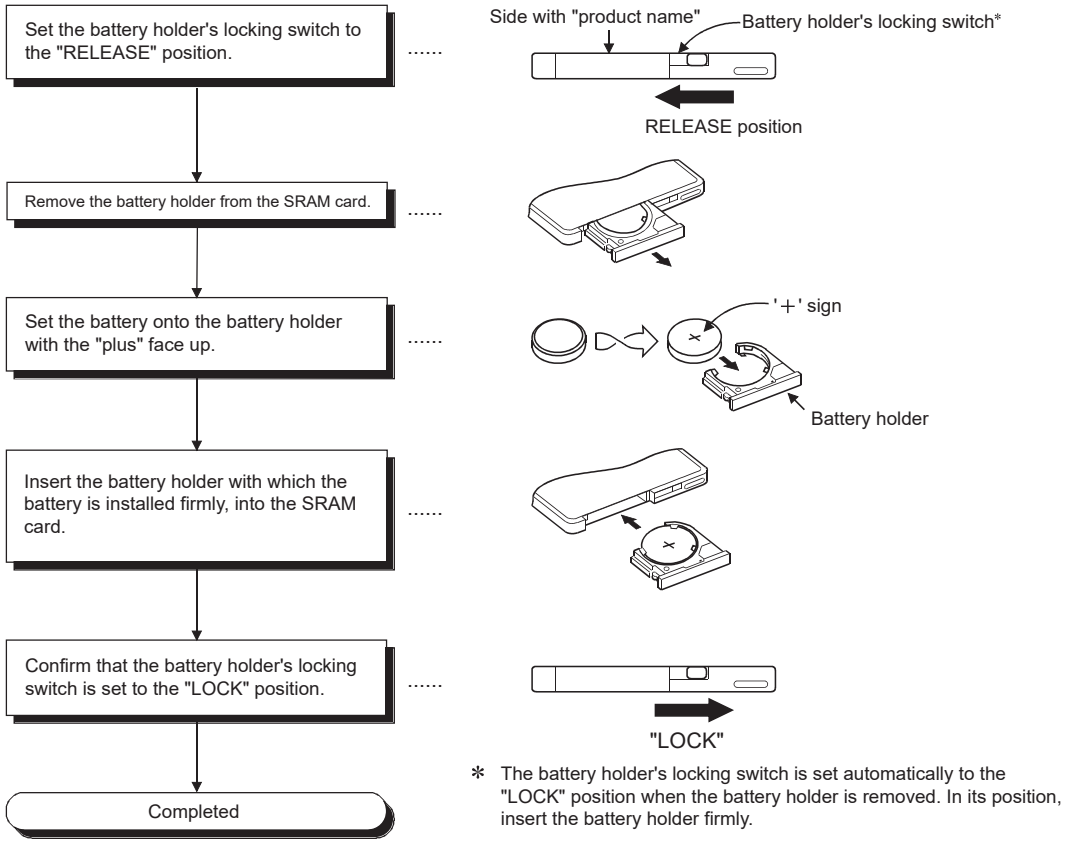

* The battery holder's locking switch is set automatically to the "LOCK" position when the battery holder is removed. In its position, insert the battery holder firmly.

Point

Insert or remove the battery in the horizontal direction along the battery holder fixing guide.
Failure to do so may damage the latches of the battery holder.

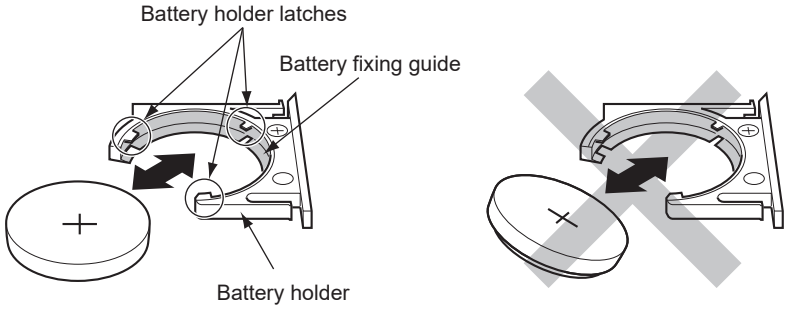

(2) For Q3MEM-4MBS and Q3MEM-8MBS

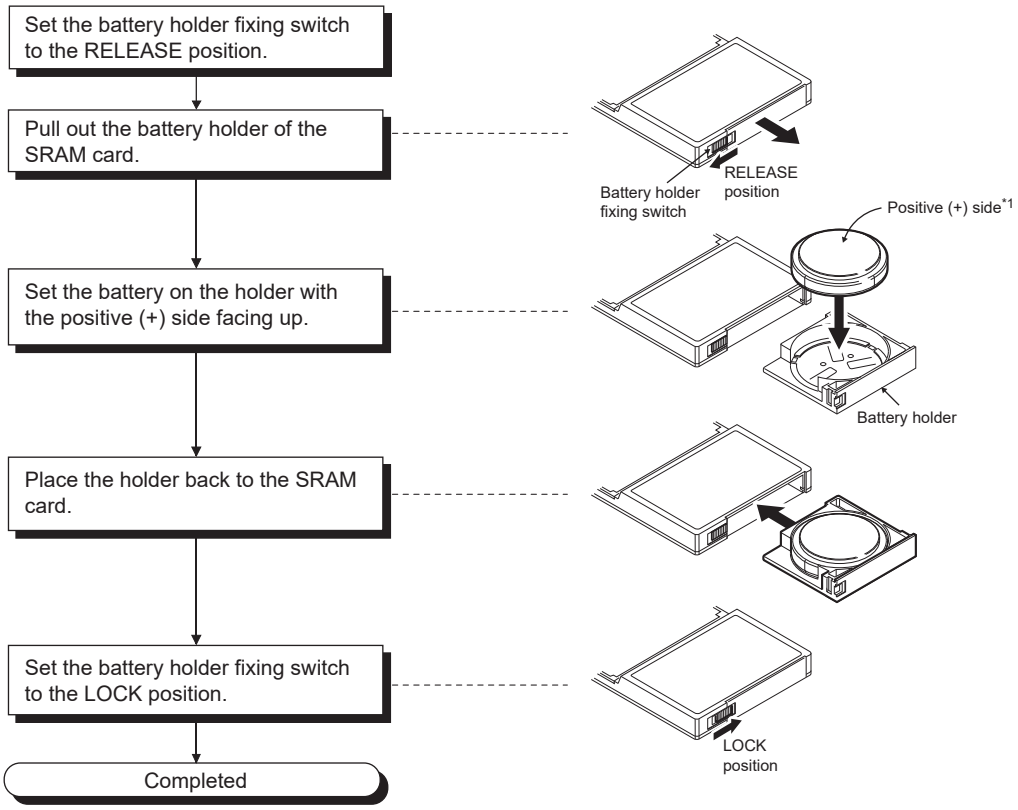

*1 The following shows the direction of a battery.

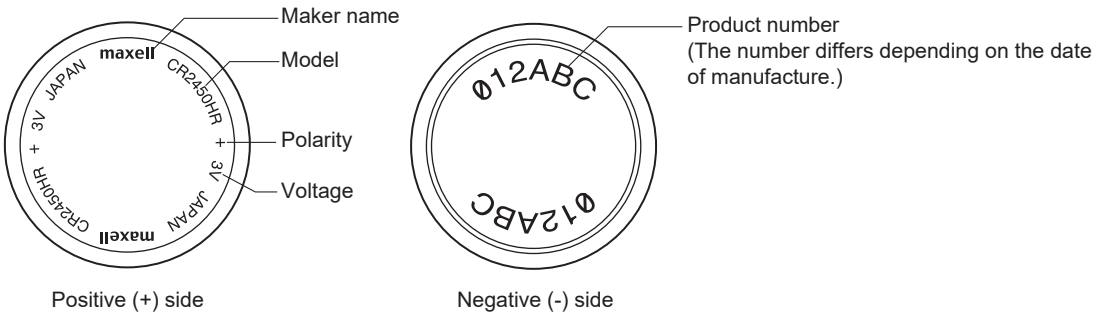

CHAPTER 10 SD MEMORY CARD

This chapter describes the specifications and handling of SD memory cards inserted to the CPU module.

Note 10.1

10.1 Part Names

The part names of an SD memory card are described below.

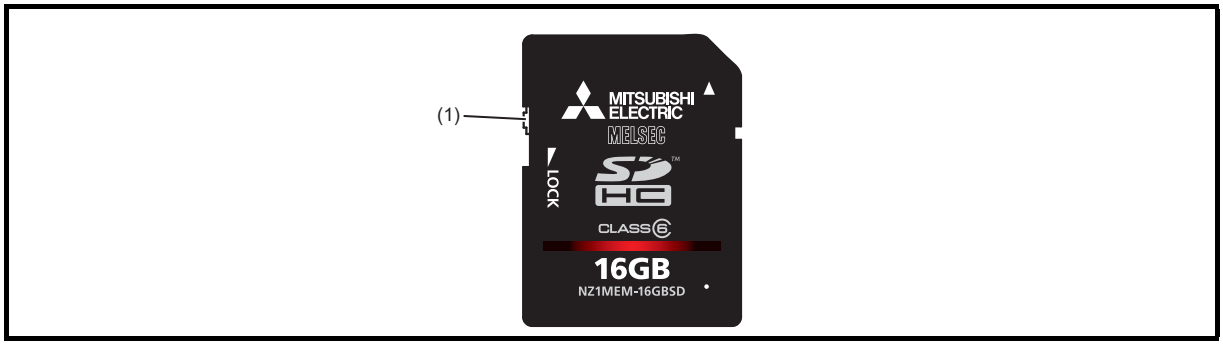

No.	Name	Descriptions
(1)	Write protect switch	Prevents the data in an SD memory card from being erased or modified by setting this switch to the LOCK position.

Note 10.1 Basic High performance Process Redundant Universal

The Basic model QCPU, High Performance model QCPU, Process CPU, and Redundant CPU do not support the use of SD memory cards. For the Universal model QCPU, only the QnUDVCPU and QnUDPVCPU support the use of SD memory cards.

10.2 Specifications

This section describes the specifications of SD memory cards.

Item		NZ1MEM-2GBSD	NZ1MEM-4GBSD	NZ1MEM-8GBSD	NZ1MEM-16GBSD
Type		SD	SDHC		
Capacity		2G bytes	4G bytes	8G bytes	16G bytes
Number of writings		60000 times	100000 times		
External dimensions	H	32mm			
	W	24mm			
	D	2.1mm			
Weight		2g			

For the specifications of the L1MEM-□GBSD, refer to Page 672, Appendix 7.

10.3 Handling

This section describes how to handle an SD memory card.

- Use an SD memory card manufactured by Mitsubishi (NZ1MEM-□GBSD).*1
  Using a non-Mitsubishi SD memory card may cause a problem, such as damage of data in the SD memory card and system stop.
- SD memory cards manufactured by Mitsubishi conform to IEC 61131-2 when being used in a CPU module.
- SDHC memory cards can be used only with CPU modules that are compatible with them. (An SDHC logo is printed on each of these CPU modules or the manuals of them.) Note that SDHC memory cards cannot be used with the CPU modules that are compatible with SD only.
- All SD memory cards to be used in the CPU module need to be formatted.
  SD memory cards manufactured by Mitsubishi are already formatted at the factory. When using other SD memory cards that are not formatted, format the cards before use.
- Use the programming tool to format SD memory cards. (Do not use a personal computer.) (Operating manual for the programming tool used)
- Performing any of the following operations, powering off the system, resetting the CPU module, or removing the SD memory card, while the SD memory card is being accessed may damage data in the SD memory card. Stop access to the SD memory card, and then perform these operations. (Page 102, Section 4.6 (2))
  Using SM606 (SD memory card forced disable instruction) and SM607 (SD memory card forced disable status flag) can disable the SD memory card or check the SD memory card disabled status.
- Regularly back up important data by saving them to other media, such as a CD and DVD.

*1 If commercially available SD memory cards are used, operation under the environment described in the general specifications (Page 119, CHAPTER 5) is not guaranteed. Ensure that such SD memory cards do not affect the control of the target system before use.

10.4 Forcibly Disabling the SD Memory Card

The SD memory card can be disabled before the CPU module is powered off regardless of the status of SD604 (Memory card use conditions).

(1) How to disable the SD memory card forcibly

1. **Turn on SM606 (SD memory card forced disable instruction). The SD memory card inserted to the CPU module is disabled regardless of the status of SD604 (Memory card use conditions).**
   Check the SD memory card disabled status in SM607 (SD memory card forced disable status flag).
2. **The SD CARD LED turns off.**

(2) How to enable the disabled SD memory card

The SD memory card forcibly disabled status can be canceled by the following operations.

- Powering off and then on the CPU module
- Resetting the CPU module
- Turning off SM606 (SD memory card forced disable instruction)*1

*1 The status of SM606 (SD memory card forced disable instruction) cannot be changed until SM607 (SD memory card forced disable status flag) turns on after SM606 is turned on.

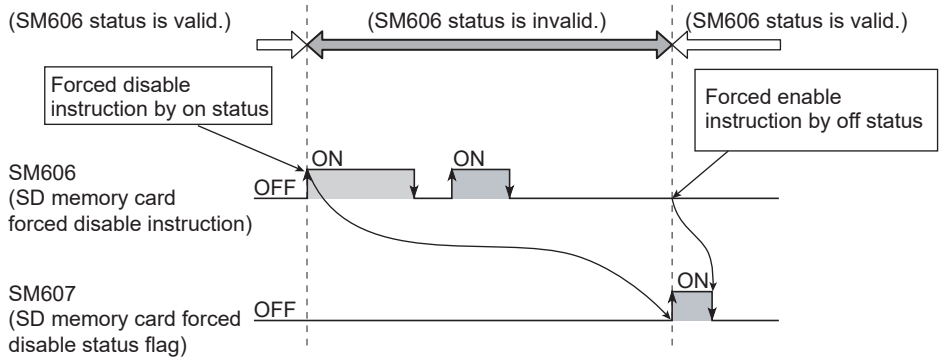

(3) Precautions

- When the SD memory card is accessed after it has been disabled forcibly, the CPU module operates in the same way when the SD memory card is not inserted. Note, however, that no processing is performed when the SD memory card is accessed by the FREAD, FWRITE, COMRD(P), or QCDSET(P) instruction.
- When SM606 (SD memory card forced disable instruction) is on and an SD memory card is inserted, turning off SM606 can enables the SD memory card.
- If the SD memory card is forcibly disabled while a file is written from an external device to the card, the writing may fail. Cancel the SD memory card disabled status and try the writing again.

CHAPTER 11 EXTENDED SRAM CASSETTE

This chapter describes the specifications of extended SRAM cassettes installed to CPU modules. Note 11.1

11.1 Part Names

The part names of the extended SRAM cassette are described below.

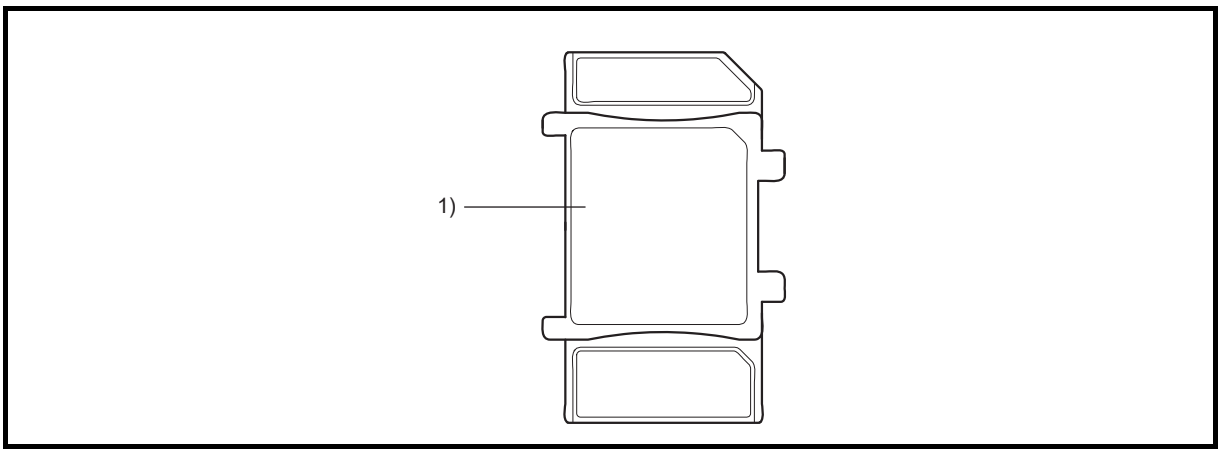

No.	Name	Application
1)	Knob for cassette insertion/removal	A part which is held when an extended SRAM cassette is installed or removed

Note 11.1 Basic High performance Process Redundant Universal

The Basic model QCPU, High Performance model QCPU, Process CPU, and Redundant CPU do not support the use of extended SRAM cassettes. For the Universal model QCPU, only the QnUDVCPU and QnUDPVCPU support the use of extended SRAM cassettes.

11.2 Specifications

This section describes the specifications of extended SRAM cassettes.

Item		Q4MCA-1MBS	Q4MCA-2MBS	Q4MCA-4MBS	Q4MCA-8MBS
Capacity		1M bytes	2M bytes	4M bytes	8M bytes
External dimensions	H	49mm			
	W	32mm			
	D	18.5mm			
Weight		0.02kg			

11.3 Handling

(1) Installing an extended SRAM cassette

- Insert the extended SRAM cassette at power-off. (☞ Page 103, Section 4.7 (1))
- The data that is stored in a standard RAM before the extended SRAM cassette is installed is retained after the extended SRAM cassette is installed as well.

(2) Removing an extended SRAM cassette

- Remove the extended SRAM cassette at power-off. (☞ Page 104, Section 4.7 (2))
- Removing the extended SRAM cassette deletes all the data stored in the standard RAM (including the extended SRAM cassette).

CHAPTER 12 BATTERY

This chapter describes the specifications of the batteries to install in the CPU module and how to handle them.

Note 12.1

12.1 Specifications

This section describes the specifications of the battery used for the CPU module.

Item	Type			
	Q6BAT	Q7BATN*1	Q7BAT*1	Q8BAT*2
Classification	Manganese dioxide lithium primary battery			Manganese dioxide lithium primary battery (assembled battery)
Initial voltage	3.0V			
Nominal current	1800mAh	6000mAh	5000mAh	18000mAh (1800mAh × 10 pieces)
Battery life when stored	Actually 5 years (room temperature)			
Battery life when used	☞ Page 623, Appendix 4.2			
Lithium content	0.57g*3	1.8g	1.55g	5.7g*4

*1 A battery holder is included with a Q7BATN-SET and a Q7BAT-SET. Note that the Q7BAT battery holder cannot be used for the Q7BATN.

*2 A Q8BAT connection cable is included with the purchase of a Q8BAT-SET.

*3 The lithium content of batteries manufactured in July 2017 or earlier differs from this list. For details, refer to the following.

Changes in battery parts (FA-A-0242)

*4 The lithium content of batteries manufactured in November 2017 or earlier differs from this list. For details, refer to the following.

Changes in battery parts (FA-A-0242)

Remark

- For the battery life, refer to ☞ Page 623, Appendix 4.2.
- For the battery directive in EU member states, refer to ☞ Page 701, Appendix 12.
- The Universal model QCPU has a function that can extend battery life: the battery life-prolonging function. This function extends the life of battery installed in the CPU module by restricting data to be held by the battery to clock data only. For details of the data to be held, refer to the following.
  QnUCPU User's Manual (Function Explanation, Program Fundamentals)

12.2 Application

A battery is used as the backup power for the standard RAM, the device/label for which the latches are enabled, and clock data.

Note 12.1 **Basic**

The Basic model QCPU does not support the use of the Q7BATN, Q7BAT, or Q8BAT.

12.3 Installation Procedure

(1) Q6BAT installation procedure

The battery connector of the Q6BAT is disconnected when shipping.
Before using the CPU module, connect the connector as follows.
For how to replace the battery, refer to ☞ Page 271, Section 13.3.

(a) Basic model QCPU

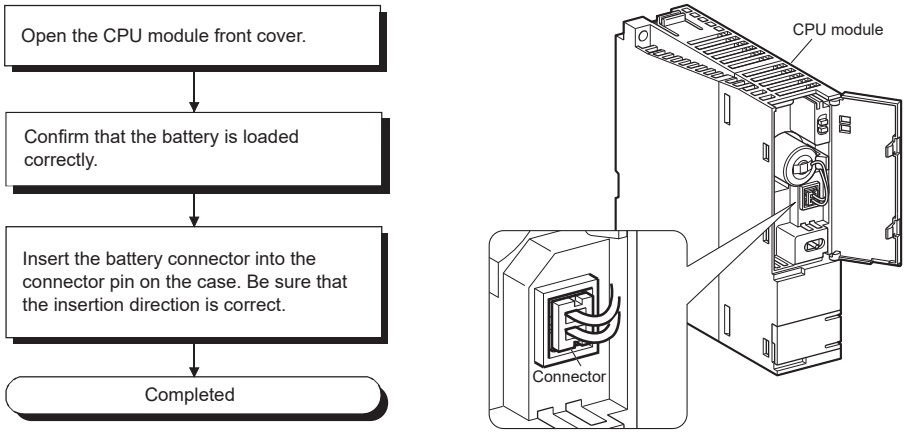

(b) High Performance model QCPU, Process CPU, Redundant CPU and Universal model QCPU

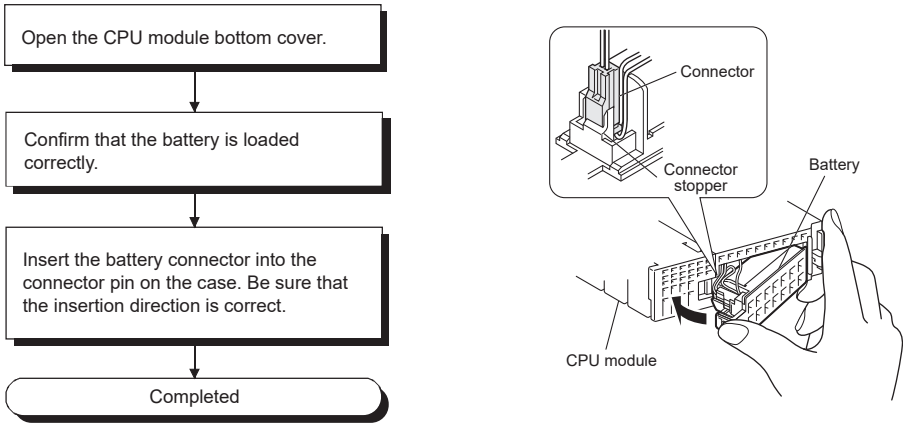

Point

Firmly push the connector all the way.

(2) Q7BATN-SET/Q7BAT-SET installation procedure

When changing the battery of the CPU module from the Q6BAT to the Q7BATN/Q7BAT, install the battery and connect its connector in the following procedure.

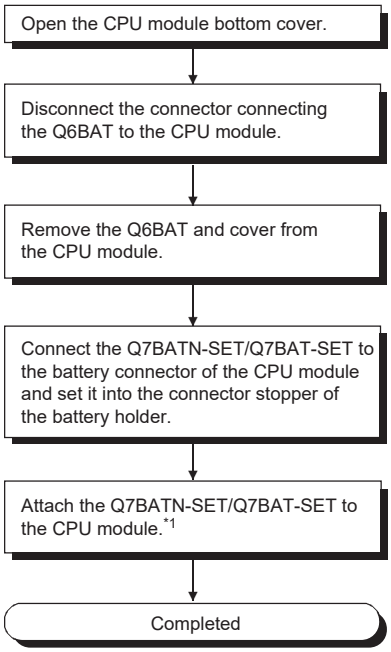

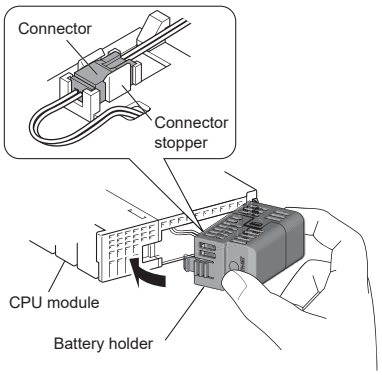

*1 Be careful not to let the battery cable get caught between the Q7BATN-SET/Q7BAT-SET and the CPU module when attaching the battery holder.

Point

Firmly push the connector all the way.

(3) Q8BAT-SET installation procedure

When changing the battery of the CPU module from the Q6BAT to the Q8BAT, install the battery and connect its connector in the following procedure.

Open the cover of the CPU module's bottom.

↓

Disconnect the connector connecting the Q6BAT to the CPU module.

↓

Remove the Q6BAT and cover from the CPU module.

↓

Insert the connector of Q8BAT connection cable (included in the Q8BAT-SET) into the connector of CPU module while confirming the orientation of each connector.

↓

Attach the Q8BAT connection cover to the CPU module.

↓

(To next page)

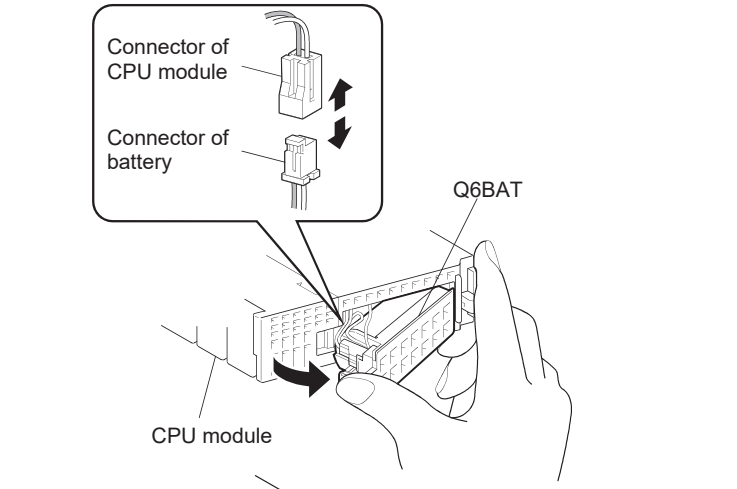

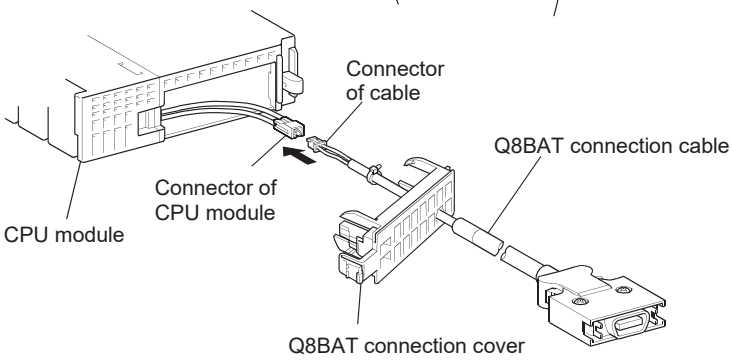

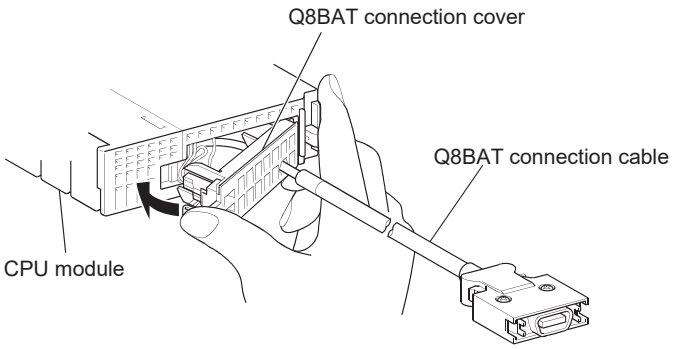

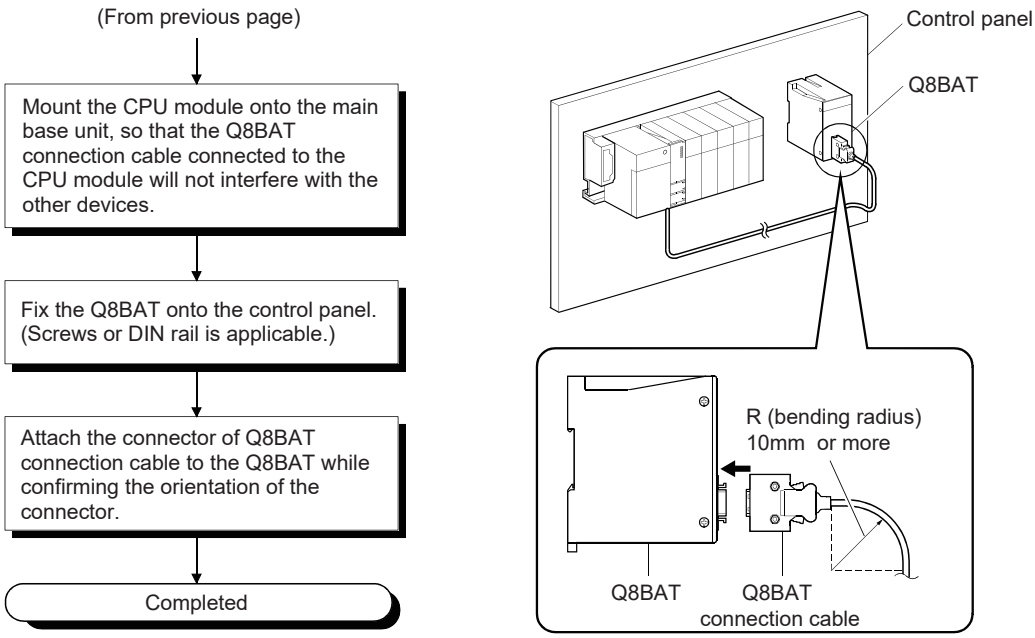

Point

- Clamp the Q8BAT connection cable.
  Failure to do so may damage the Q8BAT connection cover, connector, or the cable due to unintentional swinging and shifting or accidental pulling of the cable.
- Provide 10mm or more of the bending radius for the Q8BAT connection cable.
  If the bending radius is less than 10mm, malfunction may occur due to characteristic deterioration and wire breakage.
- For details of the module mounting position, refer to the following.
  Page 61, Section 4.1.2
- Firmly push the connector all the way.
- When installing the Q8BAT for the Universal model QCPU, use the connection cable with "A" printed.

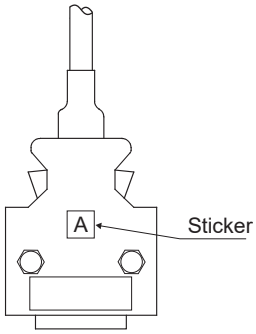

CHAPTER 13 MAINTENANCE AND INSPECTION

This chapter describes items that must be maintained or inspected daily or periodically to properly use a programmable controller in optimal condition at all times.

13.1 Daily Inspection

This section describes items that must be inspected daily.

No.	Inspection item		Inspection details	Criteria	Action
1	Installation of base unit		Check that installation screws are not loose and the cover is not dislocated.	The screws and cover must be installed securely.	Retighten the screws.
2	Installation of I/O module		Check that the module is not dislocated and the module fixing hook is engaged securely.	The module fixing hook must be engaged and installed securely.	Securely engaged the module fixing hook.
3	Connecting conditions		Check for loose terminal screws.	Screws must not be loose.	Retighten the terminal screws.
			Check for distance between solderless terminals.	The proper clearance must be provided between solderless terminals.	Correct.
			Check that the cable connector is not loose.	Connections must no be loose.	Retighten the connector fixing screws.
4	Module indication LED	Power supply module POWER LED*1	Check that the LED is on.	The LED must be on (green). (Error if the LED is off or on (red)).	Page 293, Section 15.1
		Power supply module LIFE LED*2	Check that the LED is on.	The LED must be on (green or orange) or flashing (orange). (Error if the LED is off, on (red), or flashing (red))	
		CPU module MODE LED*3	Check that the LED is on.	The LED must be on (green). (Error if the LED is off or flashing.)	
		CPU module RUN LED	Check that the LED is on in the RUN status.	The LED must be on. (Error if the LED is off.)	
		CPU module ERR. LED	Check that the LED is off.	The LED must be off. (Error if the LED is on or flashing.)	
		CPU module BAT. LED*4	Check that the LED is off.	The LED must be off. (Error if the LED is on.)	
		Input module Input LED	Check that the LED turns on and off.	The LED must be on when the input power is turned on. The LED must be off when the input power is turned off. (Error if the LED does not turn on or turn off as indicated above.)	
		Output module Output LED	Check that the LED turns on and off.	The LED turns on when the output power is turned on. The LED must be off when the output power is turned off. (Error if the LED does not turn on or turn off as indicated above.)	

*1 For the Q00JCPU and Q00UJCPU, check the POWER LED on the CPU module side.
*2 When the Life detection power supply module is used, check the LIFE LED.
*3 The Basic model QCPU does not have the MODE LED.
*4 The Basic model QCPU does not have the BAT. LED.

13.2 Periodic Inspection

The items that must be inspected one or two times every 6 months to 1 year are listed below.
When the equipment has been relocated or modified, or wiring layout has been changed, perform this inspection.

No.	Inspection item		Inspection details	Criteria	Action
1	Ambient environment	Ambient temperature*2	Measure with a thermometer and a hygrometer. Measure corrosive gas.	0 to 55°C	Ensure that the ambient environment meets the criteria.
		Ambient humidity		5 to 95%RH*1	
		Atmosphere		Corrosive gas must not be present.	
2	Power voltage		Measure a voltage between the terminals of 100/200VAC and 24VDC.	85 to 132VAC	Change the power supply.
				170 to 264VAC	
				15.6 to 31.2VDC	
3	Installation	Looseness, rattling	Move the module to check for looseness and rattling.	The module must be installed securely.	Retighten the screws. If the CPU, I/O, or power supply module is loose, fix it with screws.
		Adhesion of dirt and foreign matter	Check visually.	Dirt and foreign matter must not be present.	Remove and clean.
4	Connection	Looseness of terminal screws	Try to further tighten screws with a screwdriver.	Screws must not be loose.	Retighten the terminal screws.
		Proximity of solderless terminals to each other	Check visually.	Solderless terminals must be positioned at proper intervals.	Correct.
		Looseness of connectors	Check visually.	Connectors must not be loose.	Retighten the connector fixing screws.
5	Battery		Check the BAT. LED at the front side of the CPU module.	The LED must be off.	Replace the battery when the BAT. LED is on.
			Check the length of term after purchasing the battery.	Must not be used more than 5 years.	Replace the battery if it has been used more than 5 years.
			Check that SM51 or SM52 is turned off using a programming tool in monitor mode.	Must be turned off.	Replace the battery when SM51 or SM52 is on.
6	PLC diagnostics		Check the Error log.	The Error log must not be updated.	Page 298, Section 15.2
7	Maximum scan time		Check the values of SD526 and SD527 using a programming tool in the monitor mode.	Maximum scan time must be within the allowable range given in the specification of the system.	Specify factors that increase the scan time. (Check the operation status of the trigger signal that passes through a loop if loop positions exist in the sequence program.)

*1 When an AnS/A Series module is used in the system, the criteria will be from 10 to 90%RH.
*2 The ambient temperature is the temperature inside the control panel where the programmable controller is installed.

13.3 Battery Replacement Procedure

13.3.1 CPU module battery replacement procedure

Replace the battery of the CPU module by the following procedures when it comes to the end of its life.
The programmable controller power must be on for 10 minutes or longer before dismounting the battery.
Data in the memory are backed up for a while by a capacitor even after the battery is removed. However, since data in the memory may be erased if the time for replacement exceeds the backup time, replace the battery quickly.

(1) Q6BAT replacement procedure (Basic model QCPU)

Backup time
3 minutes

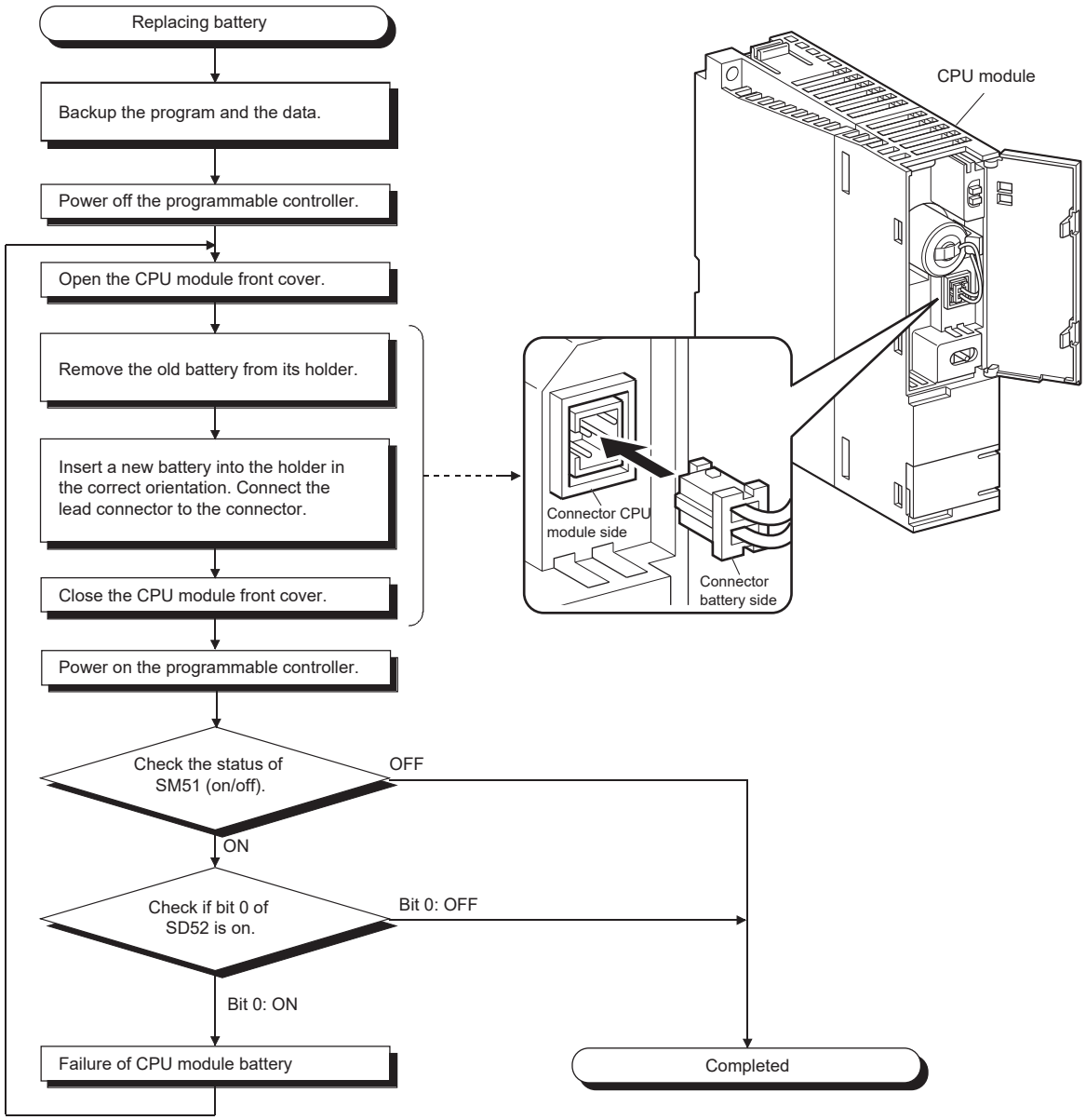

(2) Q6BAT replacement procedure (High Performance model QCPU, Process CPU, Redundant CPU and Universal model QCPU)

Backup time
3 minutes

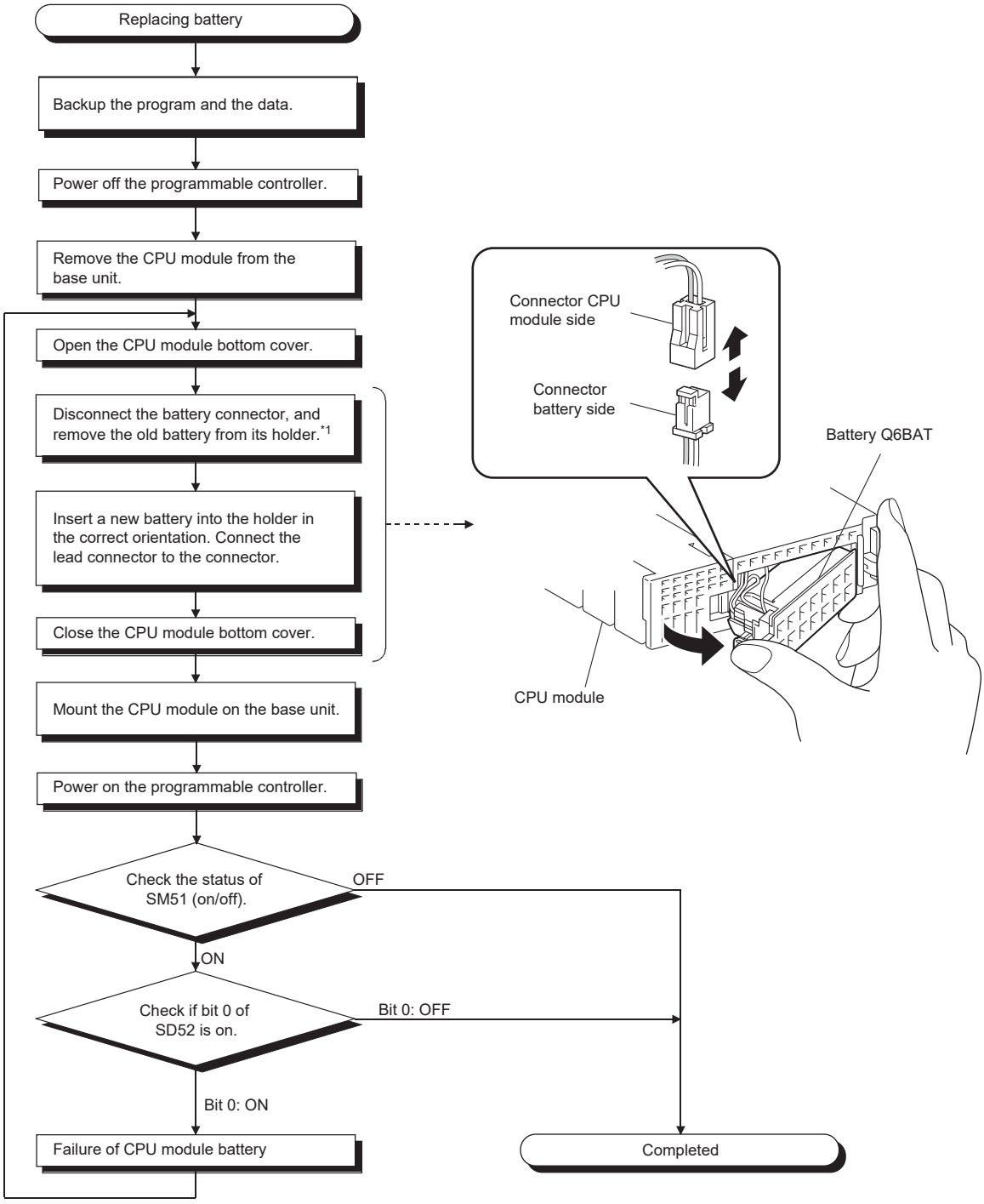

*1 When disconnecting the battery connector, hold the connector part so that the cables are not damaged.

(3) Q7BATN/Q7BAT replacement procedure

Backup time
3 minutes

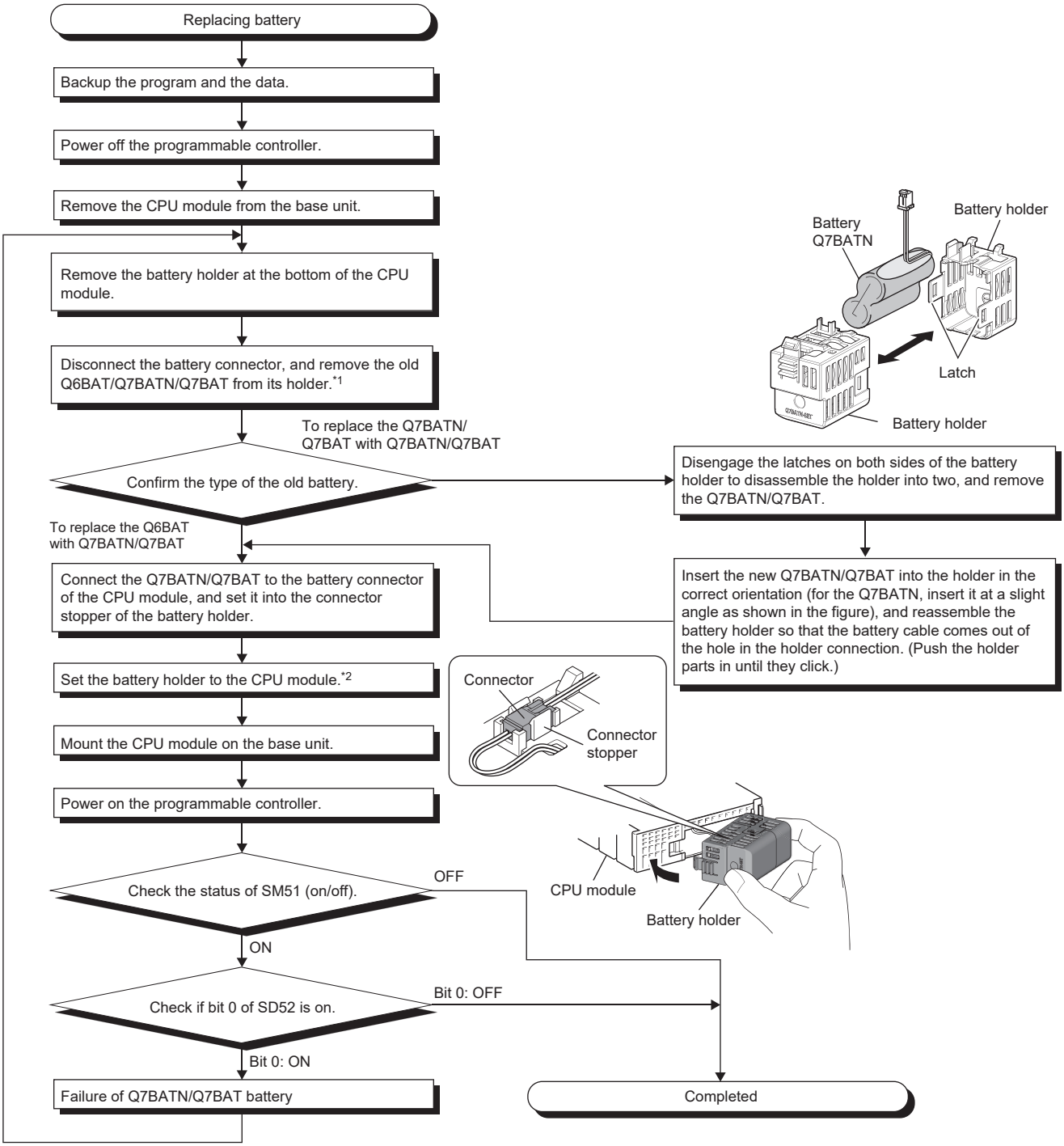

*1 When disconnecting the battery connector, hold the connector part so that the cables are not damaged.

*2 Be careful not to let the battery cable get caught between the Q7BATN-SET/Q7BAT-SET and the CPU module when attaching the battery holder.

(4) Q8BAT replacement procedure

Backup time
3 minutes

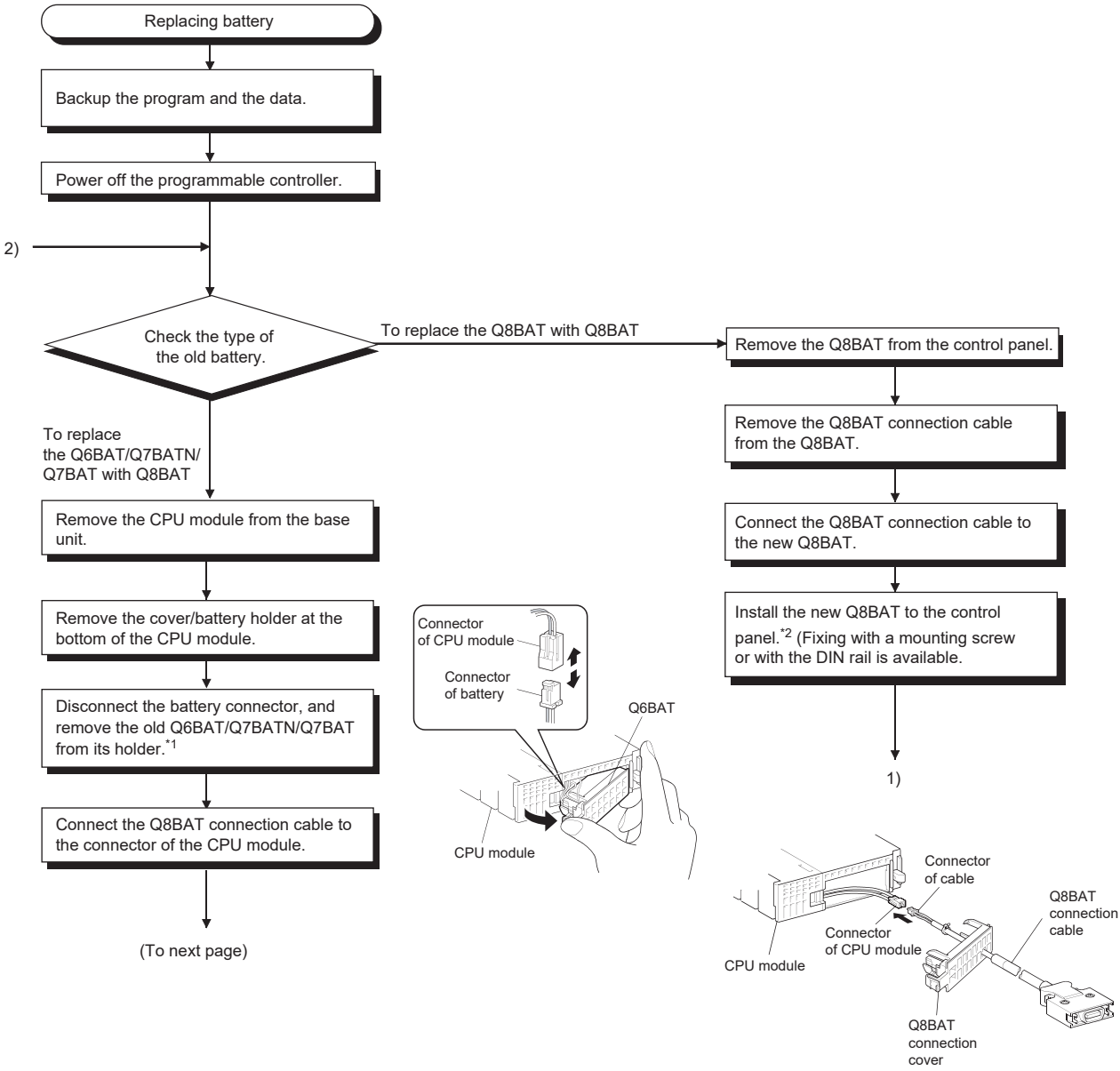

*1 When disconnecting the battery connector, hold the connector part so that the cables are not damaged.

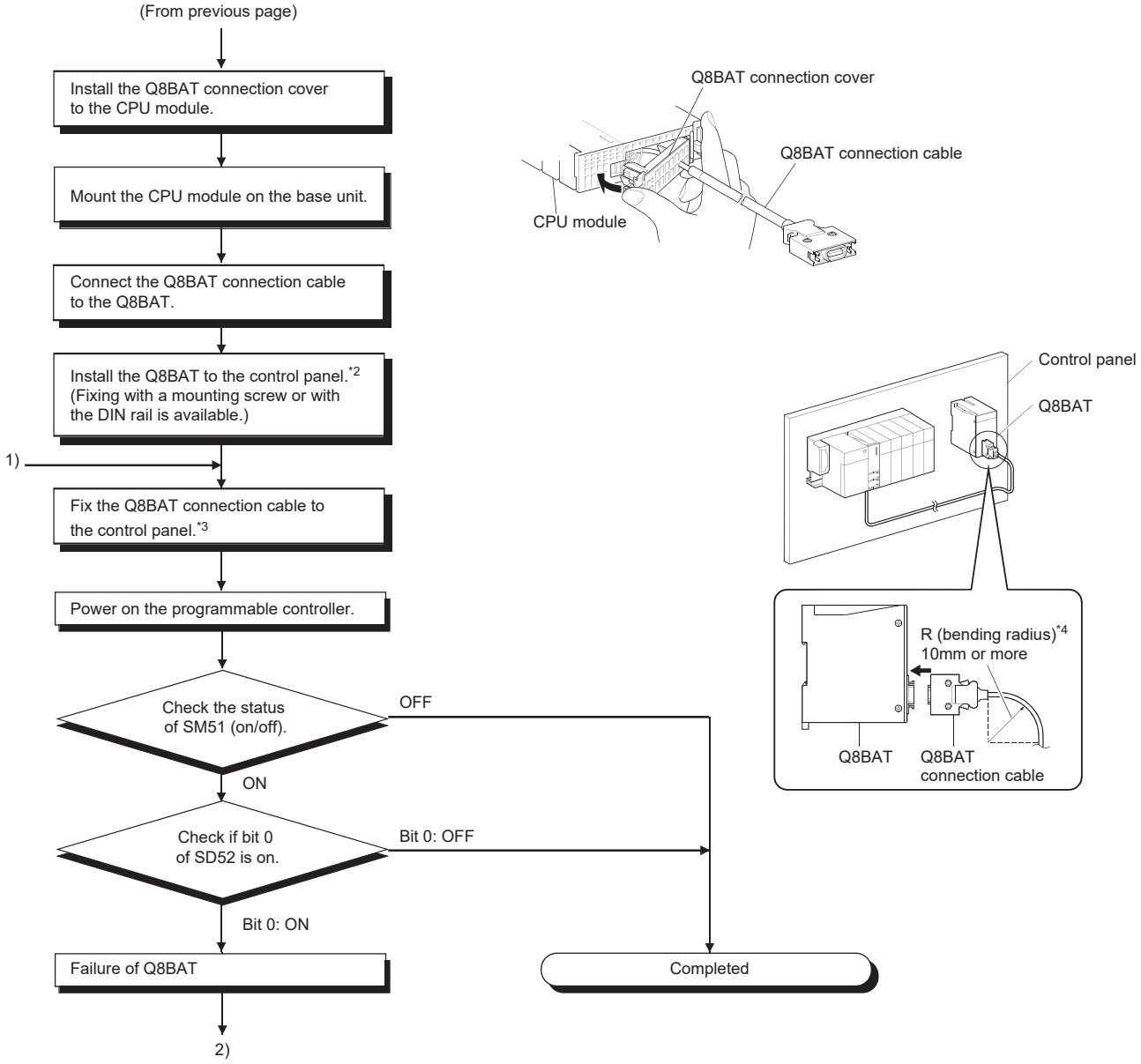

*2 For the module mounting position, refer to the following.

Page 61, Section 4.1.2

*3 Clamp the Q8BAT connection cable. If not being clamped, the Q8BAT connection cover, connector, and cable, may be damaged by a loose cable connection, shifting, or pulling due to carelessness, etc.

*4 Secure 10mm or more as the minimum cable bend radius.
If it is less than 10mm, malfunction may occur due to characteristic deterioration, open cable or the like.

Point

- After replacing a battery, write the date for next battery replacement on the sticker on the back side of the front cover. Write the proper date by checking the battery life. (Page 623, Appendix 4.2)

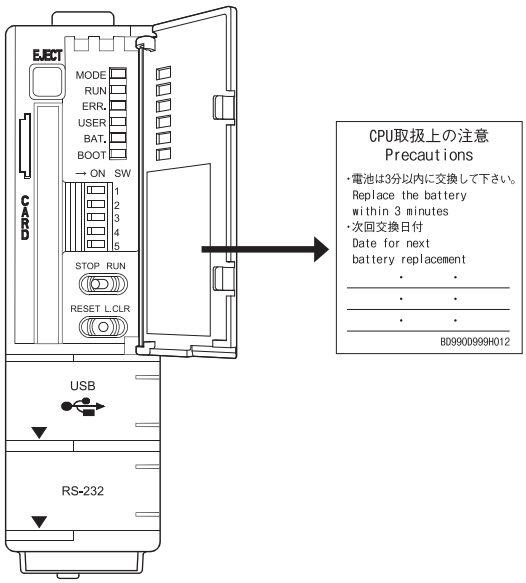

- When replacing the battery of a CPU module, pay attention to the following:
  - Back up the data in the CPU module by a programming tool before starting replacement.
  - When replacing a battery of a Redundant CPU, back up the memory data such as programs by the memory copy from the control system to the standby system, and then replace the battery of the CPU module that was changed into the standby status by the system switching function.
    For the memory copy from control system to standby system and system switching function, refer to the manual below.
    QnPRHCPU User's Manual (Redundant System)
  - When the MELSEC-Q series is used as a UL-certified product, the Q6BAT, Q7BATN, Q7BAT, and Q8BAT batteries must be replaced by service personnel.
    The service personnel are defined as experienced technicians who have been sufficiently educated and trained, and are capable of perceiving and avoiding operational hazard.

13.3.2 SRAM card battery replacement procedure

Replace the SRAM card battery in the following procedure.

(1) Replacing Q2MEM-1MBSN, Q2MEM-1MBS, Q2MEM-2MBSN, and Q2MEM-2MBS

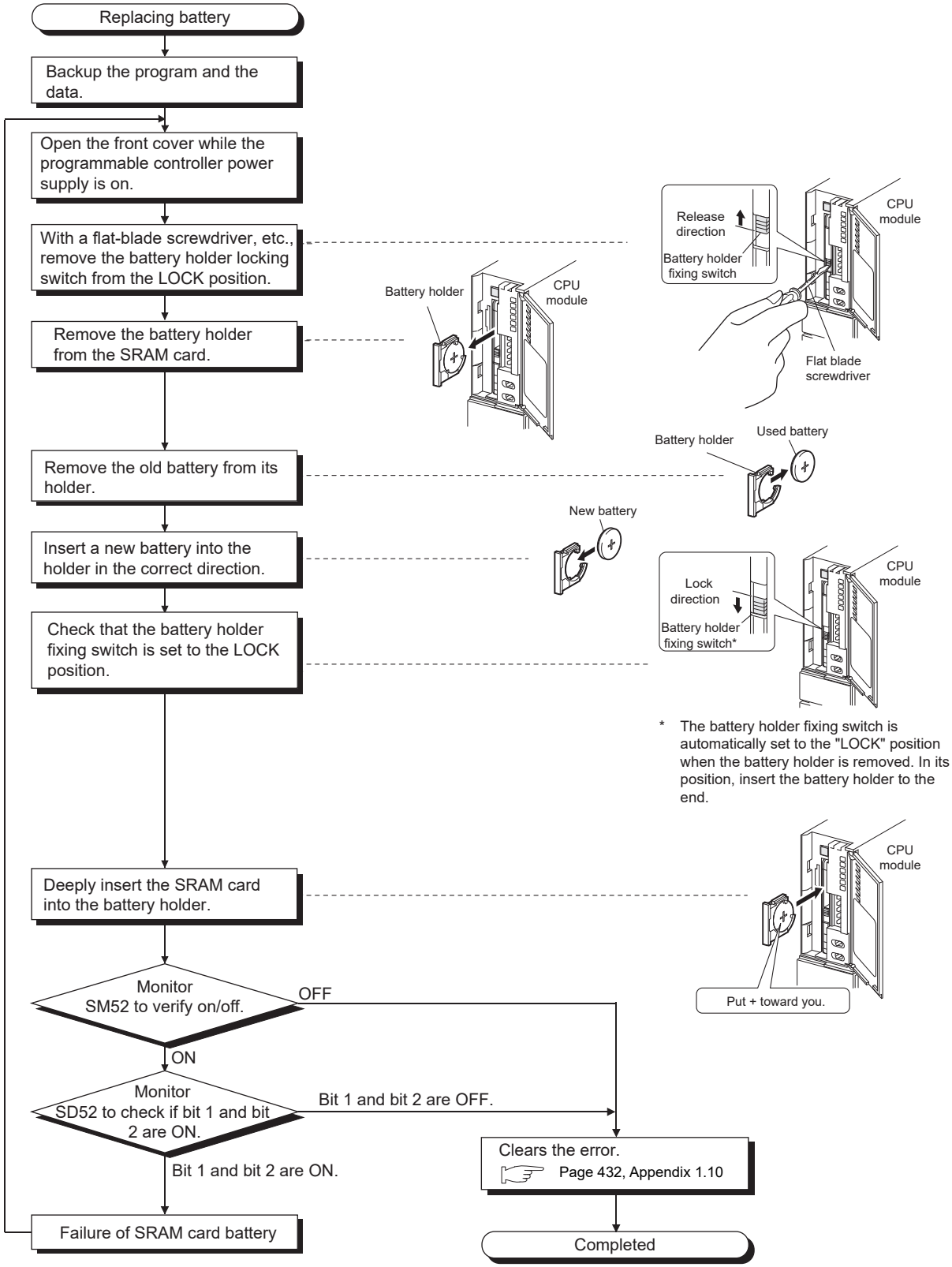

* The battery holder fixing switch is automatically set to the "LOCK" position when the battery holder is removed. In its position, insert the battery holder to the end.

(2) Replacing Q3MEM-4MBS and Q3MEM-8MBS

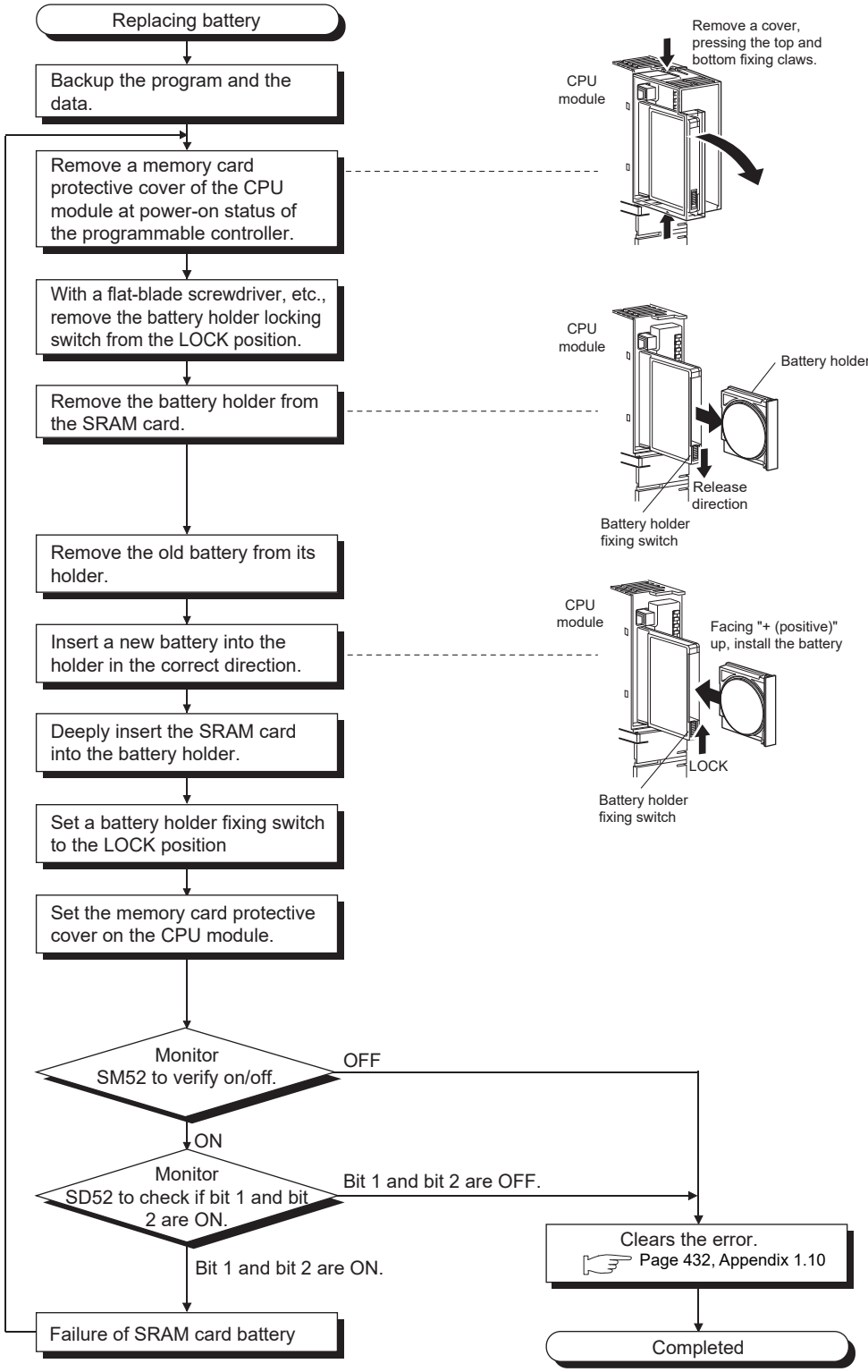

Point

Be careful about the following to replace the SRAM card battery.

- To back up the data, replace the SRAM card battery with the programmable controller power supply on and the SRAM card installed.
- Start replacement after backing up the CPU module data using a programming tool.
- Since replacement is made with the programmable controller power supply ON, take extreme care not to get an electric shock.
- When dismounting or mounting the battery holder on the SRAM card, take care so that the battery does not come out of the battery holder.
- When replacing the battery with the programmable controller power supply off, always back up the data before starting replacement.
  [Battery replacement procedure]
  1) Back up the SRAM card data using the programming tool.
  2) Replace the battery.
  3) Write the backed up data from the programming tool to the memory card.

Insert or remove the battery in the horizontal direction along the battery holder fixing guide. Failure to do so may damage the latches of the battery holder.

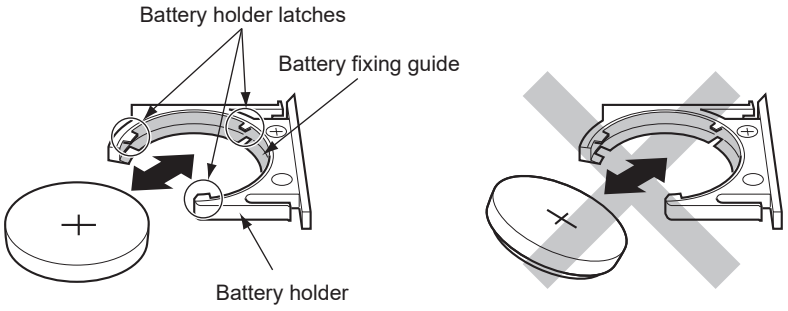

- When it is difficult to pull out the battery holder of the SRAM card, use the plastic tweezers with grooved tips (1) as shown below. Hook the grooved tips on the holder, and pull out the holder.

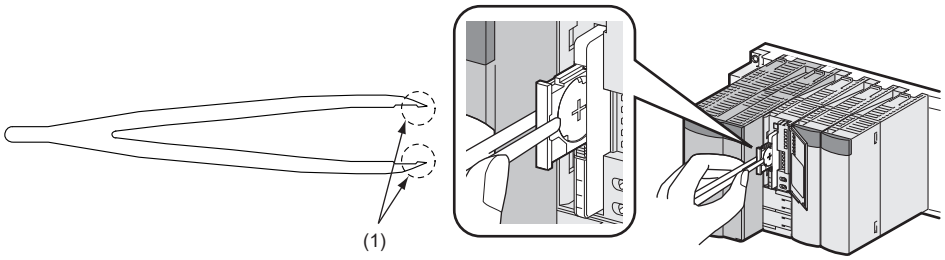

13.4 Operating the Programmable Controller that Has been Stored

When the programmable controller that has been stored with a battery removed or the programmable controller that has been stored with a battery exceeding the guaranteed life installed is operated, data in the following battery-backed-up-memories may be indefinite.

Memory		Battery	
		Battery of a CPU Module	Battery built in a memory card
CPU module	Program memory	○*1	×
	Standard RAM (Including an extended SRAM cassette)	○	×
	Standard ROM	---- (Battery backup not required)	
Memory card	SRAM card	×	○
	Flash card	---- (Battery backup not required)	
	ATA card	---- (Battery backup not required)	
SD memory card		---- (Battery backup not required)	

○: Battery backed up, ×: Not battery backed up

*1 The program memory of the Universal model QCPU does not require battery backup.

Before restarting the operation, format the battery-backed-up-memories listed in above table using a programming tool. (Operating manual for the programming tool used)
After formatting the memories, write backup data to each memory.
To format the program memory during boot operation, select the "Clear Program Memory" checkbox in the Boot File tab of the PLC parameter dialog box.

Point

- Before storing a programmable controller, back up all the data stored in each memory. Write the data with a programming tool before restarting an operation.
- When the programmable controller is powered on or the CPU module is reset, the CPU module initializes all of the following data if an error is detected. Restarting an operation with initialized data may cause an unintended operation.
  - Program memory data
  - Standard RAM data
  - Error history
  - Latch data (latch relay (L), devices in latch setting range set in the parameter, special relay SM900 to SM999, special register SD900 to SD999)
  - Sampling trace data
- For the Universal model QCPU, when the latch data backup (to standard ROM) function is used, latch data such as device data and error history data in the CPU module can be backed up without using a battery. Therefore, when a programmable controller is stored with a battery removed, the stored data will not be lost.

CHAPTER 14 MODULE CHANGE DURING SYSTEM OPERATION

14.1 Online Module Change Note 14.1

An online module change is a function that allows the Q series module mounted on the main base unit or extension base unit to be changed during system control executed by the Process CPU or Redundant CPU.
Using an online module change, the module that failed during control can be replaced with the module of the same model name.

Point

- An online module change cannot add a module or change the current module for another module.
- When executing an online module change for the Process CPU in the multiple CPU system, it is necessary to specify "Enable Online Module Change with Another PLC" in the multiple CPU setting of the PLC parameter dialog box.
  Also, there are restrictions on the versions of the CPU modules that comprise the multiple CPU system. For details, refer to the following.
  QCPU User's Manual (Multiple CPU System)
- Perform an online module change after confirming that the system outside the programmable controller will not malfunction.
- To prevent an electric shock, operating module malfunction, etc., provide a switch or similar individually cutting-off means for the external power supply of the module to be changed online.
- It is recommended to verify that the operations of the unchanged modules will not be affected by executing an online module change in an actual system beforehand to confirm the following.
  - The means and structure that will cut off the connection with the external device are correct.
  - ON/OFF of switches, etc. has no influence.
- After first use of the product, do not perform the following operation more than 50 times (IEC 61131-2/JIS B 3502 compliant). Exceeding the limit may cause malfunction.
  - Mounting/removing the module to/from the base unit

Note 14.1 Basic High performance Universal

The Basic model QCPU, High Performance model QCPU, and Universal model QCPU do not support this function.

(1) System configuration that allows online module change

An online module change can be performed under the following conditions.

(a) Modules that can be changed online

The following table lists modules that can be changed online.

Module type		Restrictions
Input module		No restrictions
Output module		
I/O combined module		
Intelligent function module	Analog-digital converter module	Supported by function version C.*1
	Digital-analog converter module	
	Temperature input module	
	Temperature control module	
	Pulse input module	

*1 When using Redundant CPU and/or connecting an extension base unit, online module change cannot be performed to an intelligent function module mounted on the main base unit.

The modules other than listed above cannot be changed online.

For whether the above intelligent function modules can be changed online or not and their changing procedures, refer to the manual of the used intelligent function module.

(b) Versions of a programming tool that supports online module change

A programming tool is required to perform an online module change.

For versions of a programming tool, refer to the operating manual for the programming tool used.

An online module change can also be performed from a programming tool via a network.

(c) Restrictions on base units

- When the slim type main base unit (Q3□SB) is used, an online module change cannot be performed.
- When the extension base unit of the type that requires no power supply module (Q5□B) is used, an online module change cannot be performed for the modules mounted on all base units connected.
- When the redundant type extension base unit (Q6□WRB) is used, the online module change cannot be performed to all modules connected to the main base unit.

(d) Control status of CPU module

A module can be changed online when a stop error does not occur.
The following table describes whether a module can be changed online or not depending on the control status of the CPU module.

Control status	RUN status*1	STOP status	PAUSE status	At stop error
Whether online module change can be executed or not	Can be executed	Can be executed	Can be executed	Cannot be executed

*1 Including the case where a continue error has occurred in the RUN status.

An online module change can be continued even when the CPU module is set to the STOP or PAUSE status during the operation. In either of the following cases, however, online module change cannot be continued.

- When the CPU module is reset
- When a stop error occurs

(e) Number of modules that can be changed online

The number of modules that can be changed online at one time is one for each CPU module.
Multiple modules cannot be changed simultaneously.

(2) Restrictions on online module change

The following operations cannot be performed during an online module change.

- Issue an online module change request from multiple programming tools to one CPU module.
- Write parameters to the CPU module during online module change.

Point

The following message appears if an online module change request is issued from another programming tool to the CPU module during online module change.
After confirming the message, select "Yes" or "No".

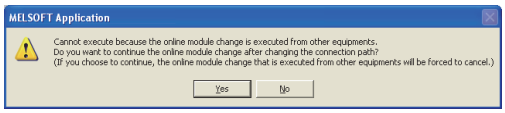

- When "Yes" is selected
  Online module change operation is switched to "Programming tool 2)" that issued the request later. (Operation is continued from the pre-switching status.)

■ "Yes" selected

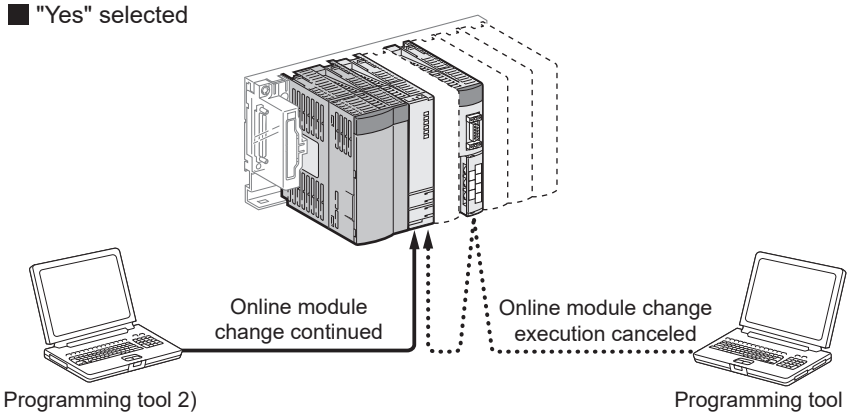

- When "No" is selected
  The operation of online module change "Programming tool 2)" requested later is suspended. (Online module change "Programming tool 1)" executed first is continued.)

■ "No" selected

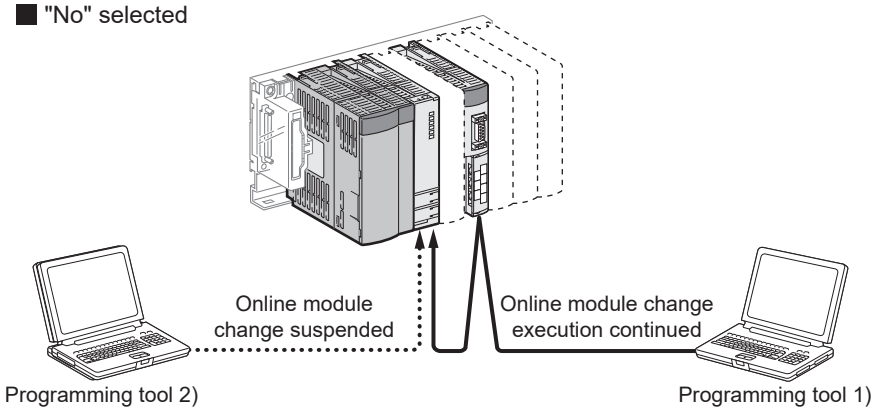

(3) Special relays and special register related to online module change

Information during online module change is stored into the special relays (SM235, SM236) and special register (SD235).

- Whether the online module change of the corresponding CPU module is executed or not can be checked by monitoring SM235, SM236 and SD235.
- SM235: Online module change flag (turns on during online module change)
- SM236: Flag that turns on only one scan after online module change (turns on only one scan after completion of online module change)
- SD235: Module being changed online (stores the starting I/O number of the module being changed online÷10_H)

Refer to Page 478, Appendix 2 for details of SM235 and SM236 and to Page 527, Appendix 3 for details of SD235.

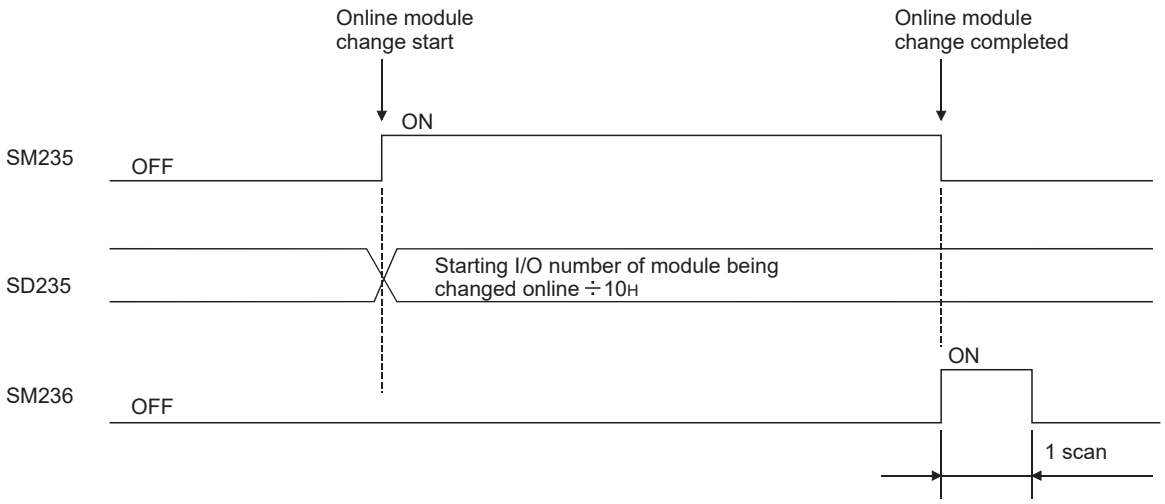

(4) Online module change procedure

The following explains the online module change procedure of the I/O module.

For the online module change procedure of the intelligent function module, refer to the manual of the used intelligent function module.

Point

- It is recommended to turn off the output (Y) from the output module/I/O combined module to be changed online before it is changed.
- When making an online module change for the Redundant CPU, specify "No settings have been made (Default)", "System A" or "System B" as the target system in the "transfer setup" by a programming tool.
  Do not specify the "Control system" or "Standby system" as the target system.
  If the "Control system" or "Standby system" is specified in the transfer setup, the following error dialog appears at execution of an online module change.
  When the following error dialog is displayed, change the target system to "No settings have been made (Default)", "System A" or "System B", and then perform an online module change.

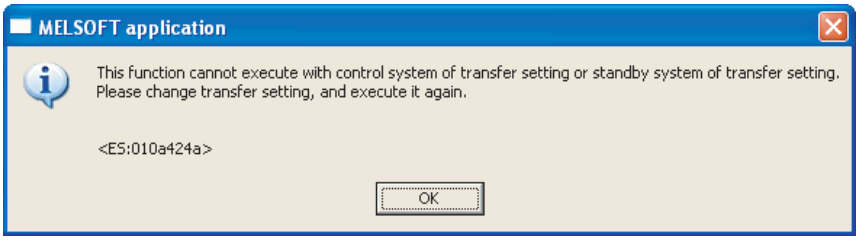

- When executing online module change for the module mounted on the extension base unit in the Redundant CPU, access cannot be made to a module mounted on the extension base unit from the standby system. Set [Transfer setup] in a programming tool, checking that the transfer target Redundant CPU module is the control system.

1. Online module change can be performed by the following operation.

[Diagnostics] ⇨ [Online Module Change]

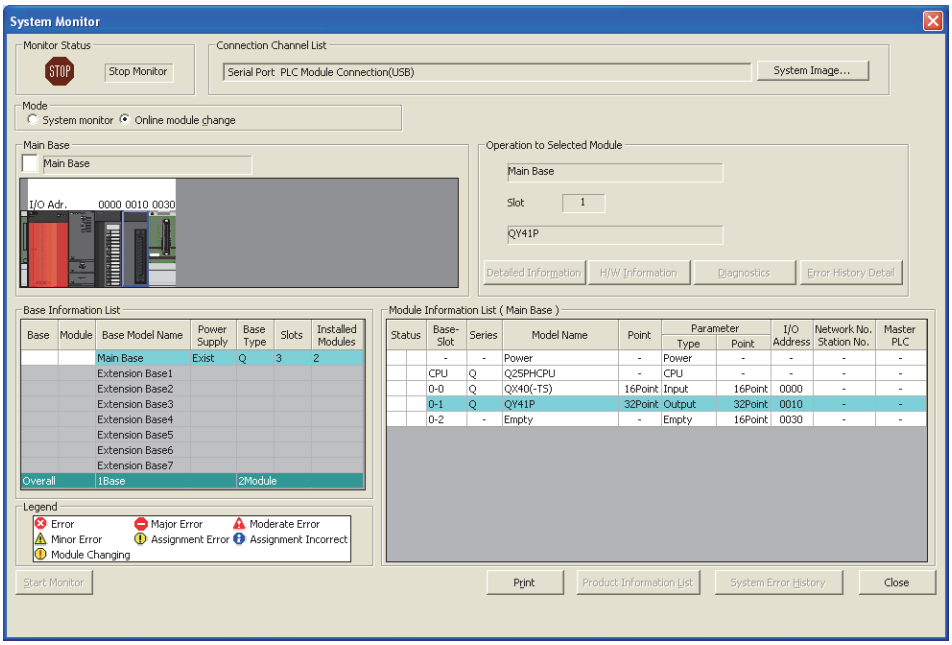

2. Double-click the module to be changed online. The Online Module Change screen appears.

(The following table lists the communication status with the change-target module while the following screen is displayed.)

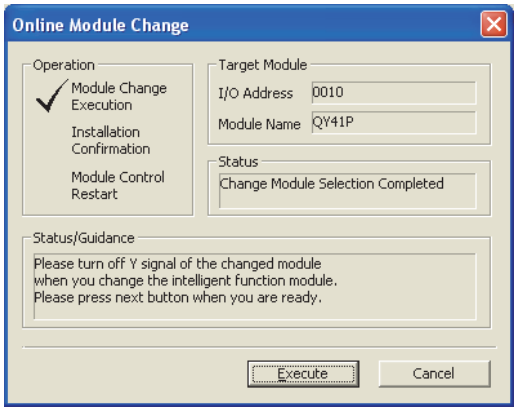

Target module, item		Executed/Not executed
Input module refresh		Executed
Output module refresh		Executed
I/O hybrid module	Input refresh	Executed
	Output refresh	Executed
Intelligent function module	Input refresh	Executed
	Output refresh	Executed
	FROM/TO instruction	Executed
	Instruction using intelligent function module device	Executed
	Intelligent dedicated instruction	Executed
	Intelligent automatic refresh	Executed
	Buffer memory batch monitor	Executed

3. Click the "Execution" button to enable the online module change operation.

(The following table lists the communication status with the target module for online module change when the following screen is displayed.)

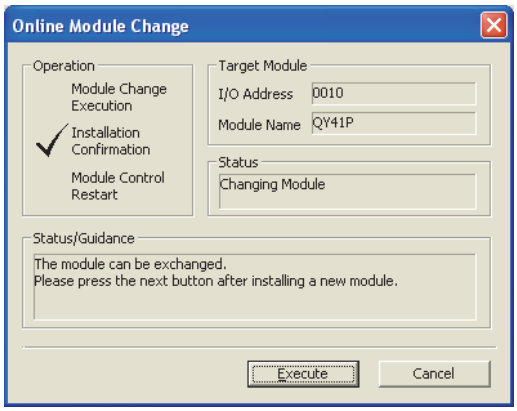

Target module, item		Executed/Not executed
Input module refresh		Not executed (Data held)
Output module refresh		Not executed
I/O hybrid module	Input refresh	Not executed (Data held)
	Output refresh	Not executed
Intelligent function module	Input refresh	Not executed
	Output refresh	Not executed
	FROM/TO instruction	No processing
	Instruction using intelligent function module device	No processing
	Intelligent dedicated instruction	No processing
	Intelligent automatic refresh	No processing
	Buffer memory batch monitor	Communication error

4. Cut off the connection (I/O signal communication) with the external device using a switch.

5. Turn off the external power supply for the module. Power supply to the module is shut off.

6. Disconnect the terminal block or connector from the module.

7. Remove the module from the base unit. (Page 73, Section 4.2.3)

8. Mount a new module on the same slot. (Page 73, Section 4.2.3)

9. Connect the terminal block or connector to the new module.

10. Turn on the external power supply for the module. Power supply to the module is resumed.

11. Establish a connection (I/O signal communication) with the external device using a switch.

12. **After changing the module, click the "Execution" button.**

(The following table lists the communication status with the change-target module while the following screen is displayed.)

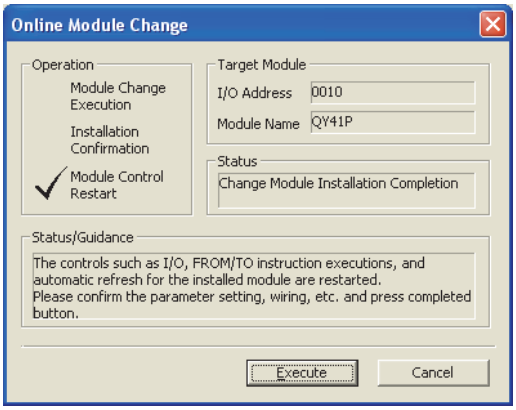

Target module, item		Executed/Not executed
Input module refresh		Not executed (Data held)
Output module refresh		Not executed
I/O hybrid module	Input refresh	Not executed (Data held)
	Output refresh	Not executed
Intelligent function module	Input refresh	Executed
	Output refresh	Executed
	FROM/TO instruction	No processing
	Instruction using intelligent function module device	No processing
	Intelligent dedicated instruction	No processing
	Intelligent automatic refresh	No processing
	Buffer memory batch monitor	Executed

Point

When the initial settings of the intelligent function module have been made by GX Configurator, the set data are written to the intelligent function module.

13. **Click the "Execution" button again to start control.**

14. **The screen that notifies the operation completion appears.**

(The following table lists the communication status with the change-target module while the following screen is displayed.)

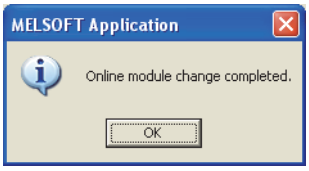

Target module, item		Executed/Not executed
Input module refresh		Executed
Output module refresh		Executed
I/O hybrid module	Input refresh	Executed
	Output refresh	Executed
Intelligent function module	Input refresh	Executed
	Output refresh	Executed
	FROM/TO instruction	Executed
	Instruction using intelligent function module device	Executed
	Intelligent dedicated instruction	Executed
	Intelligent automatic refresh	Executed
	Buffer memory batch monitor	Executed

(5) Operation in case of system switching occurrence during online module change (When Redundant type extension base unit is used)

The following describes the procedures to be taken when the system switching occurs during online module change is performed to the module mounted on the extension base unit in the Redundant CPU.

1. Connect GX Developer to the new control system.

2. Check the status of the module being replaced on the System monitor screen.
(The online module change status can be checked with SM235 of the new control system and standby system.)

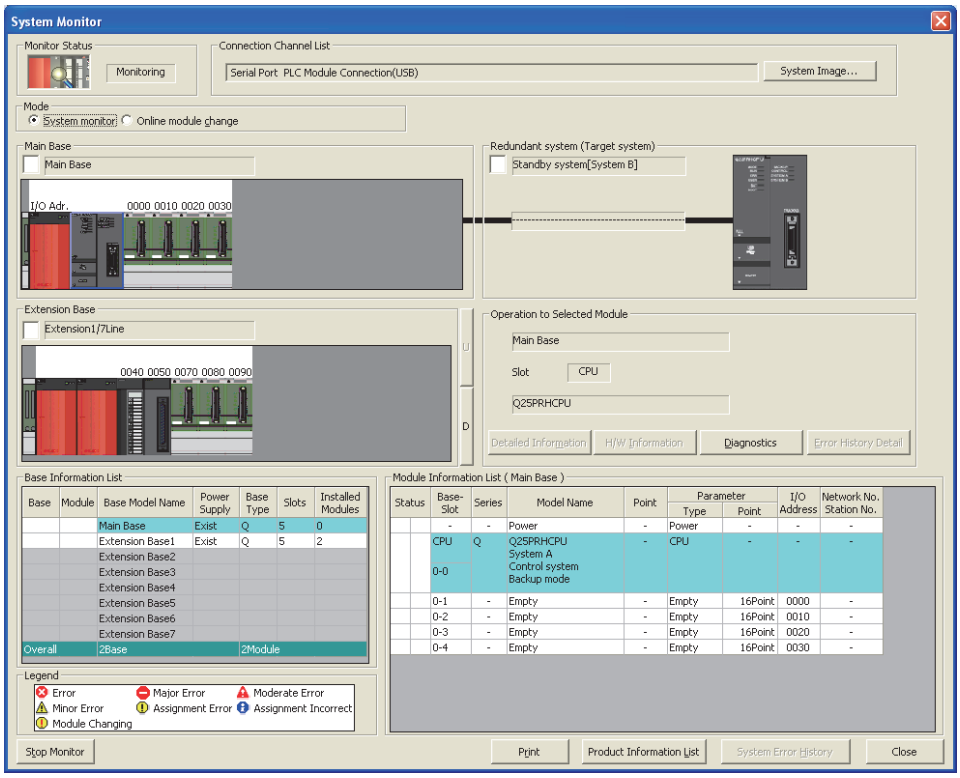

3. Select "Online module change" in the System monitor screen while the online module change is being performed. The following screen appears.

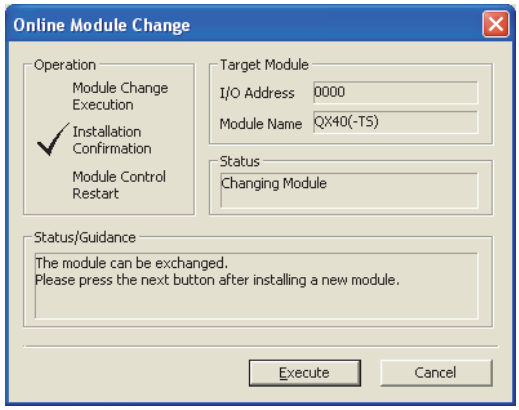

4. The operation that has been executed before the system was switched continues.

Point

- If the "Execution" button is clicked on the condition that GX Developer is connected to the new control system, the following message may appear.
  Click "Yes" and continue the online module change operation.

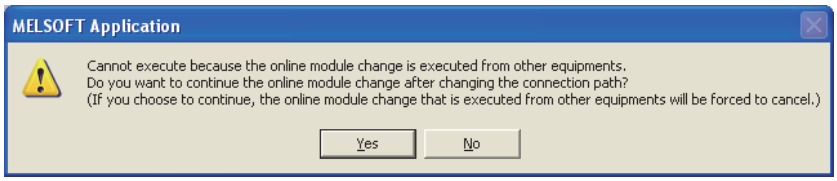

- When the online module change operation is completed, the following error dialog box may appear. Even though the operation has been completed successfully.

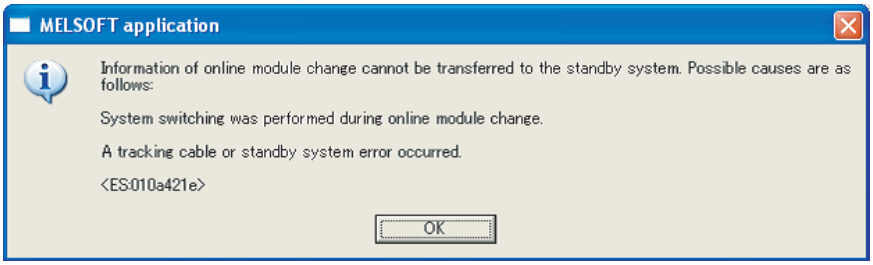

14.2 Change of Redundant Power Supply Module

Following the flowchart shown below, change a faulty redundant power supply module online (with power on).
(It is assumed that the other redundant power supply module is normally operating.)

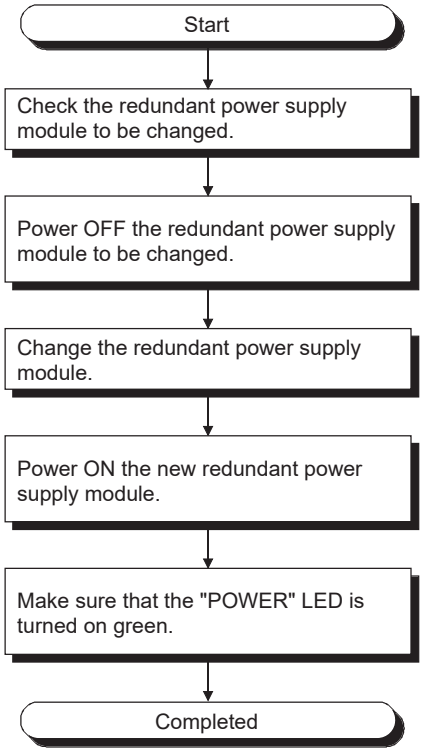

Point

- If either redundant power supply module fails, change it for a normal one earlier than usual (within 14 days as a guideline). If it does not fail, it is recommended to change the redundant power supply module for a new one after five years have elapsed.
- Change the redundant power supply module with extreme care, referring to Page 73, Section 4.2.3 (1). If the module fixing projection of the redundant power supply module comes off from the module fixing hole of the redundant base unit, an error will occur due to connector damage.
- When the redundant power supply system is used, a "continue" error will occur due to a redundant power supply module failure. Cancel the error after changing the faulty redundant power supply module for a normal one.
  Note 14.2, Note 14.3
- When the redundant power supply system is used, the failure status of the redundant power supply module can be checked by the system monitor of GX Developer (Version 8.18U or later) or the special relay SM1781/special register SD1781. Note 14.2, Note 14.3
  For details of the system monitor, refer to the following.
  Operating manual for the programming tool used

Note 14.2 Basic

Failure of redundant power supply cannot be detected by the Basic model QCPU.

Note 14.3 High performance Process

When using the High Performance QCPU or the Process CPU, check the versions of the CPU module and programming tool used. (Page 658, Appendix 6)

CHAPTER 15 TROUBLESHOOTING

This chapter describes errors that may occur during system operation, the error causes, and measures against the errors.
For a redundant system (when the Redundant CPU is used), refer to the following.
QnPRHCPU User's Manual (Redundant System)

When the system has trouble, perform troubleshooting in the following order.

- Visual inspection (Page 293, Section 15.1)
- Error checking and corrective actions (Page 298, Section 15.2)

Remark

Saving the program and devices at the time of an error helps to analyze the error cause.
(Page 321, Section 15.4)

15.1 Visual Inspection

Visually check the following.

(1) LED status

Check if there is a hardware failure or not. Check the status of each LED in the following order.
For the module status corresponding to the LED indication, refer to the "Part Names" section.

- CPU module (☞ Page 121, Section 6.1)
- Power supply module (☞ Page 204, Section 7.1)

1. **Power on the system. Check the POWER LED status of the power supply module.**
   If the POWER LED does not turn on even when power is supplied, perform the following troubleshooting.
   ☞ Page 294, Section 15.1.1
2. **Check the color of the POWER LED.**
   When the POWER LED does not turn on in green, perform the following troubleshooting.
   ☞ Page 294, Section 15.1.2
3. **When using the Life detection power supply module, check the LIFE LED status.**
   When the LIFE LED does not turn on in green or orange, perform the following troubleshooting.
   ☞ Page 295, Section 15.1.3
4. **Check the MODE LED status of the CPU module.**
   When the MODE LED does not turn on, perform the following troubleshooting.
   ☞ Page 296, Section 15.1.4
5. **Check the RUN LED status of the CPU module.**
   When the RUN LED does not turn on, perform the following troubleshooting.
   ☞ Page 297, Section 15.1.5
6. **When using the High Performance model QCPU, Process CPU, or Redundant CPU, check the BOOT LED status.**
   When the BOOT LED flickers, perform the following troubleshooting.
   ☞ Page 297, Section 15.1.6
7. **Check the ERR. LED status of the CPU module.**
   When the ERR. LED is on or flickering, an error exists.
   Check the error with the programming tool. (☞ Page 298, Section 15.2)
8. **Check the BAT. LED status of the CPU module.**
   When the BAT. LED is on, the battery voltage is low.
   Replace the battery. (☞ Page 271, Section 13.3)

(2) Communication cable and wiring

Check if any communication cable has a problem or not. Check also that connectors and terminal blocks are correctly mounted or wired.
☞ Page 105, Section 4.8

15.1.1 When the POWER LED does not turn on

Check the following.

Check item	Corrective action
The MODE LED of the CPU module is on.	The power supply module has failed. Replace the power supply module.
Power supply voltage is not appropriate.	Supply power voltage within the specified range. (☞ Page 212, Section 7.2)
The internal current consumption for the entire system exceeds the rated output current of the power supply module.	Reexamine the system configuration so that the internal current consumption does not exceed the rated output current. (☞ Page 697, Appendix 10)
The POWER LED turns on when power is supplied again to the system after all modules, except for the power supply module, were removed.	Repeatedly supply power to the system, returning the modules back to the system one by one. The last module mounted immediately before the POWER LED turned off is failed.

If the POWER LED does not turn on even after taking the above actions, the possible cause is a hardware failure of the power supply module or base unit.
Please consult your local Mitsubishi representative.

15.1.2 When the POWER LED does not turn on in green

Check the following items according to the POWER LED status.

(1) When the POWER LED turns on in red

Remove the power supply module and mount it to the normal base unit. Resupply power to the system.
If the POWER LED turns on in red after resupplying power, the power supply module is failed.
If the POWER LED does not turn on even after the power is supplied during the above operation, also check the items described in ☞ Page 294, Section 15.1.1.

(2) When the POWER LED flickers in orange

Resupply power to the system. If the POWER LED flickers in orange after resupplying power, the power supply module is failed.
If the POWER LED does not turn on even after the power is supplied during the above operation, also check the items described in ☞ Page 294, Section 15.1.1.

15.1.3 When the LIFE LED does not turn on in green or orange

Check the following items according to the LIFE LED status.

(1) When the LIFE LED is off

Resupply power to the system. If the LIFE LED turns on in red for one second, replace the power supply module as the power supply module has reached its end of life.
If the LIFE LED does not turn on or flicker after resupplying power, the power supply module should be replaced as the life diagnosis is impossible.

(2) When the LIFE LED turns on in red

Check item	Corrective action
The operating ambient temperature is out of the range of 0 to 55°C.	Keep the operating ambient temperature within the range of 0 to 55°C.
The LIFE LED turns on in red after power is resupplied.	Stop the operation of the power supply module for a while, and resupply power to the system after the internal temperature of the module is lowered. If the LIFE LED does not turn on in green or orange after resupplying power, replace the power supply module.

(3) When the LIFE LED flickers in red

Supply power to the system again. If the LIFE LED does not turn on in green or orange even after the power is supplied, check the wiring between LG and FG by referring to the following.

- Grounding a programmable controller (☞ Page 118, Section 4.8.4)
- Wiring a power cable and a ground wire (☞ Page 676, Appendix 8.1.2 (2))
- Grounding a power supply part (☞ Page 685, Appendix 8.1.5)

If the symptom still remains after the check, replace the power supply module.

15.1.4 When the MODE LED does not turn on

Check the following items.

Check item	Corrective action
The forced ON/OFF is set.	Cancel the forced ON/OFF.
When the High Performance model QCPU, Process CPU, or Redundant CPU are used, RESET/L.CLR switch is not in the neutral position.	Set the RESET/L.CLR switch to the neutral position.
The MODE LED turns on when power is supplied to the system again after the power supply module was replaced.	The original power supply module has a problem. Please consult your local Mitsubishi representative.
The MODE LED does not turn on even when power is supplied to the system again after the power supply module was replaced.	The CPU module or any other module mounted has a problem. Repeatedly supply power to the system, returning the modules back to the system one by one. The last module mounted immediately before the MODE LED turned off is failed.
The POWER LED turns on when power is supplied again to the system after all modules, except for the power supply module, were removed.	Repeatedly supply power to the system, returning the modules back to the system one by one. The last module mounted immediately before the POWER LED turned off fails.
The connection direction of the extension cable is improper. (The connection direction is OUT-OUT.)	Connect the extension cable properly.
AC power is not supplied to the power supply module.	Supply AC power to the power supply module.

For the module that caused a problem, please consult your local Mitsubishi service representative.

15.1.5 When the RUN LED does not turn on

Check the following items.

Check item	Corrective action
The RUN LED of the CPU module flickers.	Reset the CPU module or set it to RUN from STOP.
The ERR. LED of the CPU module is on or flickering.	Check the error details by the programming tool. (☞ Page 298, Section 15.2)
The RUN LED turns on when the CPU module is reset and set to RUN again.	The module is possibly affected by excessive noise. Take noise reduction measures. (☞ Page 673, Appendix 8) If the same problem frequently occurs even after the noise reduction measures are taken, the programmable controller possibly has any defective part or poor connection. Please consult your local Mitsubishi representative.

15.1.6 When the BOOT LED flickers

Turn off the programmable controller and remove the memory card. Turn the DIP switches SW2 and SW3 to ON.
When the BOOT LED turns on after power is resupplied, boot operation from the standard ROM starts.
If the BOOT LED does not turn on, the possible cause is the hardware failure of the CPU module.
Please consult your local Mitsubishi representative.

15.2 Checking the Error Details

Error causes and corrective actions can be checked by the programming tool.

If the connection cannot be established, check that the settings in the programming tool are correct.

Operating manual for the programming tool used

When the programming tool and the CPU module are connected via Ethernet, check the error details by Ethernet diagnostics and remove the error cause. (Page 300, Section 15.2 (3))

(1) PLC diagnostics

When the ERR. LED turns on or flickers, check the error details in the PLC diagnostics of the programming tool and remove the error cause.

[Diagnostics]⇨[PLC Diagnostics]

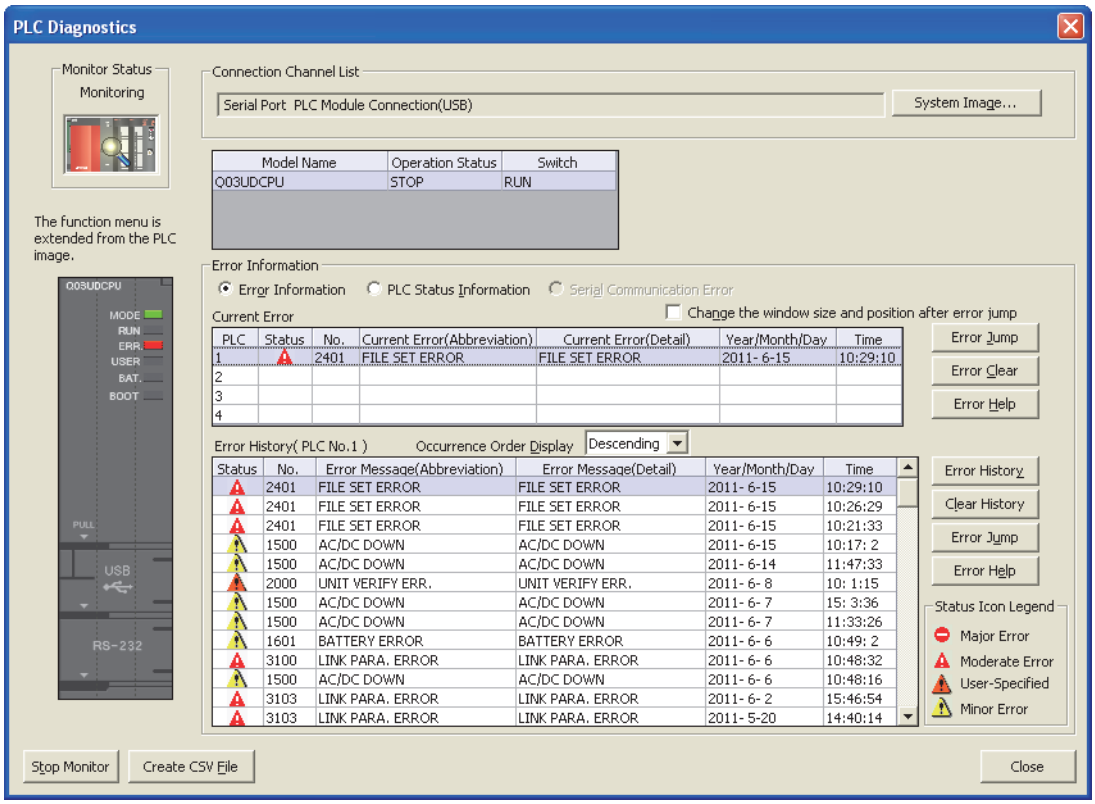

For details on the PLC diagnostics, refer to the following.

Operating manual for the programming tool used

(2) Module detailed information

When an error occurs in any intelligent function module, check the error details in System monitor of the programming tool and remove the error cause.

[Diagnostics]⇨[PLC Diagnostics]

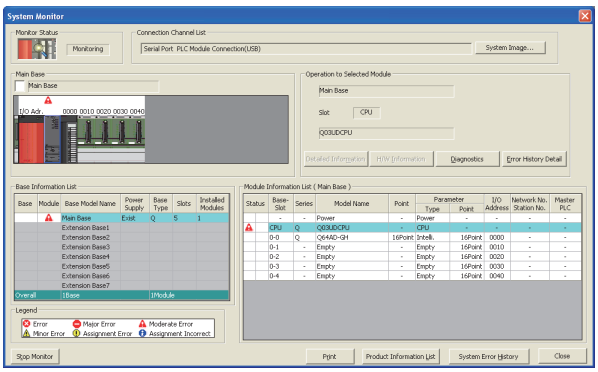

1. Select the error module in "Main Base" and click the Detailed Information button.

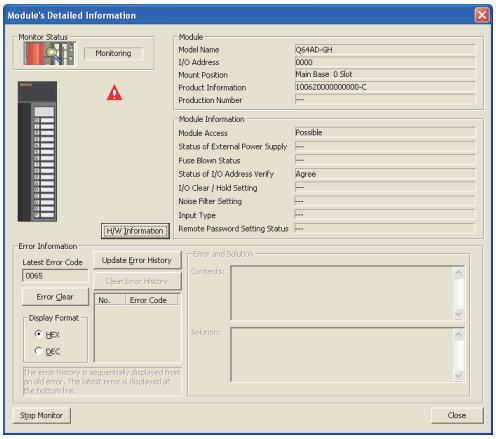

2. Detailed information of the selected module is displayed.

For details on the module detailed information, refer to the following.

User's manual for the intelligent function module used

(3) Ethernet diagnostics

Using the diagnostics function of the programming tool, the module status, parameter settings, communication status, and error history of the Built-in Ethernet port QCPU can be checked.

[Diagnostics]⇨[Ethernet Diagnostics]

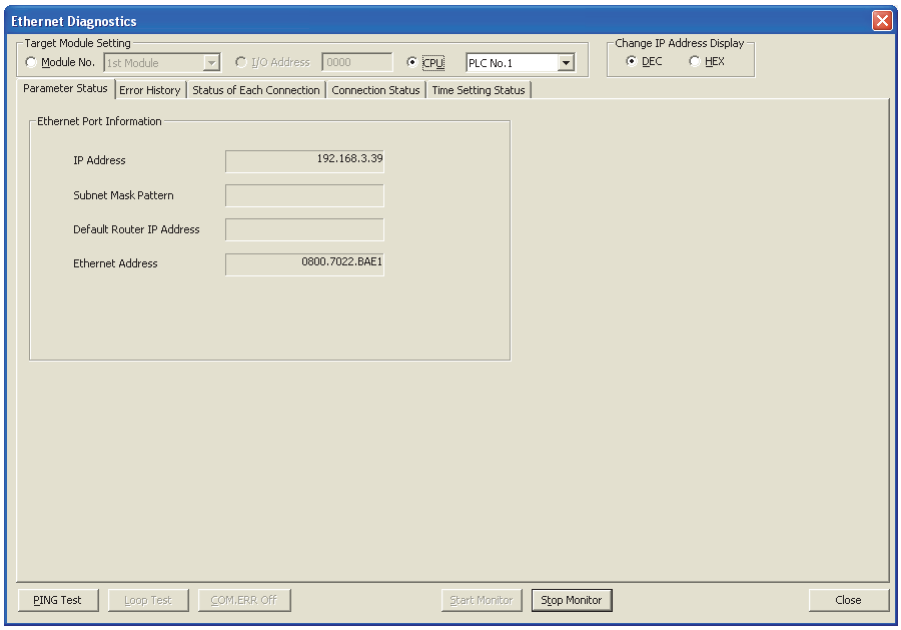

For details on the Ethernet diagnostics, refer to the following.

Operating manual for the programming tool used

Point

The MELSOFT connection where User Datagram Protocol (UDP) is used is regarded as one connection in "Status of Each Connection".
Therefore, even if multiple connections are used, the diagnostics result is displayed as one connection.

15.3 Checking for Functional Errors

If the module has a functional problem, check the following items and perform troubleshooting. If the ERR. LED is on or flickering, remove the error cause by the programming tool. (☞ Page 298, Section 15.2)

Function	Error status	Reference
Write to PLC	Data cannot be written to the CPU module.	☞ Page 302, Section 15.3.1 (1)
	The program is rewritten unintentionally.	☞ Page 302, Section 15.3.1 (2)
Read from PLC	Data cannot be read from the CPU module.	☞ Page 302, Section 15.3.1 (3)
Boot operation	A boot operation cannot be performed from a memory card or SD memory card.	☞ Page 303, Section 15.3.2
Error caused by hardware	UNIT VERIFY ERR. has occurred.	☞ Page 304, Section 15.3.3 (1)
	CONTROL BUS ERR. has occurred.	☞ Page 304, Section 15.3.3 (2)
Ethernet communication	Direct connection is not possible.	☞ Page 305, Section 15.3.4 (1)
	Ethernet communication is not possible when using a method other than direct connection.	☞ Page 306, Section 15.3.4 (2)
	Ethernet communication is not possible with the connected device.	☞ Page 306, Section 15.3.4 (3)
	Clock data cannot be set by SNTP.	☞ Page 308, Section 15.3.4 (4)
Socket communication function	The connected device cannot receive data.	☞ Page 310, Section 15.3.5 (1)
	Data cannot be received.	☞ Page 310, Section 15.3.5 (2)
	The open processing is not completed.	☞ Page 310, Section 15.3.5 (3)
Simple PLC communication function	Communication with a communication target station is not possible.	☞ Page 311, Section 15.3.6 (1)
	Communication with a communication target station is unstable.	☞ Page 311, Section 15.3.6 (2)
	Communication is not performed at preset intervals.	☞ Page 312, Section 15.3.6 (3)
	The update by reading and writing the device data is slow.	☞ Page 312, Section 15.3.6 (4)
MC protocol function	An error has occurred during MC protocol communication.	☞ Page 313, Section 15.3.7
Errors caused by SFC program instruction	"OPERATION ERROR" has occurred at execution of the S(P).SFCSCOMR and S(P).SFCTCOMR instructions.	☞ Page 316, Section 15.3.11 (1)
	Comments cannot be read at execution of the S(P).SFCSCOMR and S(P).SFCTCOMR instructions.	☞ Page 316, Section 15.3.11 (2)
I/O module	The LEDs of the output module do not turn on.	☞ Page 317, Section 15.3.12 (1)
	I/O module does not operate normally.	☞ Page 317, Section 15.3.12 (2)
	Wiring troubles	I/O Module Type Building Block User's Manual
Power supply module	The $\overline{\text{LIFE OUT}}$ terminal has turned off (opened).	☞ Page 318, Section 15.3.13 (1)
	The $\overline{\text{ERR.}}$ terminal has turned off (opened).	☞ Page 318, Section 15.3.13 (2)

Function	Error status	Reference
CC-Link IE Field Network Basic function	An error has occurred while the CC-Link IE Field Network Basic function was being used.	CC-Link IE Field Network Basic Reference Manual

15.3.1 Write to PLC and Read from PLC

(1) Write to PLC

If data cannot be written from the programming tool to the CPU module, check the following items.

Check item	Corrective action
When the High Performance model QCPU, Process CPU, or Redundant CPU are used, the DIP switch SW1 is on.	Turn the DIP switch SW1 to OFF.
The data is password-protected.	Unlock the password with the programming tool.
The write-target memory card or SD memory card is write-protected.	Cancel the protection.
The write-target memory card or SD memory card has not been formatted.	Format the card.
The size of data to be written is larger than the memory capacity.	• Secure sufficient free space in the memory. • Organize the target memory.

If data cannot be written to the CPU module even after taking the above actions, the possible cause is a hardware failure.
Please consult your local Mitsubishi representative.

(2) The program is rewritten unintentionally

The CPU module possibly performs boot operation. Perform Read from PLC with the programming tool and check the boot file setting.
When boot operation is not performed, the possible cause is a hardware failure.
Please consult your local Mitsubishi representative.

For details on the boot operation, refer to the following.

User's manual (Function Explanation, Program Fundamentals) for the CPU module used

(3) Read from PLC

If data cannot be read from the CPU module to the programming tool, check if the target memory has been correctly set.
After making sure that the target memory has been correctly set, reset the CPU module, and then read data from the CPU module again.
When the RS-232 is used for connection, reduce transmission speed, and read data from the CPU module again.

If data cannot be read from the CPU module even after taking the above actions, the possible cause is a hardware failure.
Please consult your local Mitsubishi representative.

15.3.2 Boot operation

If boot operation cannot be performed from the memory card or SD memory card, check the following items.

Check item	Corrective action
An error has occurred in the CPU module.	Remove the error cause. (☞ Page 298, Section 15.2)
When the High performance model QCPU, Process CPU, or Redundant CPU are used, the DIP switches do not specify the valid parameter drives.	Specify the valid parameter drives with the DIP switches SW2 and SW3.
A file is not set with parameter boot file setup.	Set the file.
A file is not set with parameter program setup.	
A file to be used has not been stored in the memory card or SD memory card.	Store the file to be used.

If a boot operation cannot be performed even after taking the above actions, the possible cause is a hardware failure. Please consult your local Mitsubishi representative.

15.3.3 Errors caused by hardware

(1) UNIT VERIFY ERR. has occurred

If UNIT VERIFY ERR. has occurred, check the following items.

Check item	Corrective action
The module was attached or detached during operation, or improperly mounted.	Mount the module properly and reset the CPU module.
When the extension base unit is used, the extension cable is improperly connected.	Connect the extension cable properly and reset the CPU module.

If UNIT VERIFY ERR. occurs even after taking the above actions, perform the following actions sequentially for recovery to normal operation.

- Check the target slot No. in the common information (SD5) of the error code, and replace the corresponding module.
- Replace the CPU module.
- Replace the base unit.

If UNIT VERIFY ERR. occurs even after taking the above actions, the possible cause is a hardware failure. Please consult your local Mitsubishi representative.

(2) CONTROL BUS ERR. has occurred

If CONTROL BUS ERR. has occurred, check the following items.

Check item	Corrective action
The module is improperly mounted.	Mount the module properly and reset the CPU module.
When the extension base unit is used, the extension cable is improperly connected.	Connect the extension cable properly and reset the CPU module.
Noise affects the module.	Take noise reduction measures. (☞ Page 673, Appendix 8)

If CONTROL BUS ERR. occurs even after taking the above actions, perform the following actions sequentially for recovery to normal operation.

- Check the target slot No. in the common information (SD5) of the error code, and replace the corresponding module.
- Replace the CPU module.
- Replace the base unit.

If CONTROL BUS ERR. occurs even after taking the above actions, the possible cause is a hardware failure. Please consult your local Mitsubishi representative.

15.3.4 Ethernet communication

(1) Direct connection is not possible

If Ethernet communication is not possible through direct connection with the programming tool, check the following items.

Check item	Corrective action
The CPU module is not directly connected to the programming tool with a single cable.	Directly connect the CPU module to the programming tool with a single cable.*1
The setting on the connected device (personal computer) is incorrect. • Ethernet port setting • Firewall setting • Communication setting of security software	Correct the setting on the connected device.
In the Transfer Setup setting of the programming tool, "Ethernet Port Direct Connection" is not selected for the PLC side I/F PLC Module.	Correct the Transfer setup setting.
When parameters are read after switching to USB connection, "Disable direct connection to MELSOFT" is selected in the Built-in Ethernet port setting.	Correct the parameter.
In "Status of Each Connection" of "Ethernet Diagnostics", MELSOFT Direct Connection is set in forced deactivation status.	Disable the forced deactivation.
In the "Error History" of "Ethernet Diagnostics", an error for direct connection is detected.	Take corrective actions according to the error code.
Communication can be performed by increasing the value of communication time check period or number of retries in the detailed host station setting of "Transfer Setup"	• Adjust the value of communication time check period or number of retries. • Check the condition of the cables, connected device (personal computer), and CPU module.
The connected device (personal computer) does not support the direct connection.	Connect a hub.

If Ethernet communication cannot be performed even after taking the above actions, the possible cause is a hardware failure.
Please consult your local Mitsubishi representative.

*1 When two or more Ethernet ports are enabled in the network connections setting on the personal computer, communication by direct connection is not possible. In the setting, leave only one Ethernet port enabled for direct connection and disable other Ethernet ports.

(2) Ethernet communication is not possible when using a method other than direct connection

If Ethernet communication is not possible in a method other than direct connection with the programming tool, check the following items.

Check item	Corrective action
IP addresses are overlapping.	• Check the duplicate IP addresses using the Find CPU function, and correct the IP addresses. • Correct the IP address of the programming tool (personal computer) so that it differs from the address of the CPU module. • Disconnect the device from the network, and ping the IP address of the disconnected device. If there is any response, the same IP address is used. Correct the IP address.
The specified protocol is incorrect.	Correct the Transfer Setup setting.
"Ethernet Port Direct Connection" is selected.	
The specified IP address or host name is incorrect.	

If Ethernet communication cannot be performed even after taking the above actions, the possible cause is a failure of the connected device.

Check the items described in ☞ Page 306, Section 15.3.4 (3).

(3) Ethernet communication is not possible with the connected device

If Ethernet communication is not possible with the connected device, check the following items.

Check item	Corrective action
An error has occurred in a hub.	Remove the error from the hub.[*1]
The setting on the connected device (personal computer) is incorrect. • IP address setting • Ethernet port setting • Firewall setting • Communication setting of security software	Correct the setting on the connected device.
The SD/RD LED of the CPU module is not flickering during communication.	Confirm the wiring.
IP addresses are overlapping.	• Correct the IP address of the connected device so that it differs from the address of the CPU module. • Disconnect the device from the network, and ping the IP address of the disconnected device. If there is any response, the same IP address is used. Correct the IP address.
The ERR. LED turns on or flickers when power is resupplied.	Remove the error cause. (☞ Page 298, Section 15.2)
When parameters are read after switching to USB connection, the Built-in Ethernet Port Setting is incorrect.	Correct the parameter.
In "Status of Each Connection" of "Ethernet Diagnostics", MELSOFT Direct Connection is set to the forced deactivation status.	Disable the forced deactivation.
In the "Error History" of "Ethernet Diagnostics", an error for direct connection is detected.	Take corrective actions according to the error code.

Check item	Corrective action
The number of connections from the connected device (personal computer) exceeds the number of "MELSOFT connection" of the open setting (each number of connections of TCP and UDP).	Keep the number of connections of the connected device (personal computer) within the number in the open setting.
A device was powered off with the TCP/IP connection open.	The TCP/IP connection is left open. Perform the following: • Wait for about one minute, and retry after the connection is closed by the alive check function of the CPU module. • Increase the number of connections in the setting to reserve a spare connection.
Communication can be performed by increasing the value of communication time check period or number of retries in the detailed host station setting of "Transfer Setup".	• Adjust the value of communication time check period or number of retries. • Check the condition of the cables, connected device (personal computer), and CPU module.
Any of the following settings is incorrect on the CPU module or connected device side. • Network address • Default router IP address • Subnet mask pattern • Router IP address • Subnet mask	Correct the setting.
When a router is used, an error has occurred in the router.	Remove the error from the router.
When a router is used, the setting on the router is incorrect.	Correct the setting on the router.
Any device on the network such as the CPU module, connected device (personal computer), hub, or router is replaced. (When replaced with the device of the same IP address)	Reset the devices on the network.*2
Communication is possible after replacement of the hub or router.	The hub or router may be faulty. Replace the hub or router.

If Ethernet communication cannot be performed even after taking the above actions, the possible cause is a hardware failure.

Please consult your local Mitsubishi representative.

*1 If the switching hub is reconnected to the personal computer or CPU module or is replaced with another, it may take time to read the MAC addresses. In that case, retry after a little while, or resupply power to the hub. If a dummy UDP message is sent by the socket communication function, the switching hub may learn the MAC addresses again.

*2 Devices on the Ethernet have the "ARP cache", which is the correspondence table of the IP address and MAC address. When a device on the network is replaced with the device of the same IP address, their MAC addresses stored in each "ARP cache" become inconsistent, which may cause abnormal communication.
The "ARP cache" is updated by resetting the device or after a certain period of time. The time required for updating differs depending on devices.

(4) Clock data cannot be set by SNTP

If the clock data cannot be set by SNTP, refer to the following.

Check item	Corrective action
The time setting function does not operate. (Check "Ethernet Diagnostics" or the special register (SD1270).)	Check the following on the time setting function. • SNTP is set to be used. • Input of the SNTP server IP address is correct. • Input of each executing condition is correct. • Input of a time zone is correct.
The time setting is failed. (Check "Ethernet Diagnostics" or the special register (SD1270).)	• Make sure the CPU parameter is normal. • Make sure the specified SNTP server operates normally.
For the multiple CPU system: CPU module for which the time is set is not No. 1.	Set the time for the CPU module No. 1.
The CPU module parameter is not normal.	Correct the parameter.
The time is overwritten from a program or another device.	Remove overwriting from a program or another device.

If the clock data cannot be set by SNTP even after taking the above actions, the possible cause is a failure of the connected device.

Check the items described in ☞ Page 306, Section 15.3.4 (3).

(5) Communication is slow or unstable

If communication is slow or unstable, check the following items.

Check item	Corrective action
IP addresses are duplicate.	Correct the duplicate IP address. The duplicate IP addresses are checked in the following way. • Detect the IP address using the Find CPU function. • Remove the connected device from the network, and perform PING with the IP address of the removed device. If any device responds, IP addresses are duplicate.
The number of connections of UDP exceeds the number set to "UDP" of the open setting (each number of connections of MELSOFT connection and the MC protocol).	Keep the number of connections of UDP within the number of the open setting.
Communication is based on UDP.	Perform communication on TCP.
Communication is not retried.	Retry communication. Increase the number of retries.
The hub, router, or cable has an error.	Replace the hub, router, or cable.
Communication of devices other than the CPU module is not stable.	• Take noise reduction measures. • Check the amount of network traffic. If the traffic causes instability, reduce the amount of traffic.
Many of unnecessary broadcast data are received. (The broadcast data volume can be checked in "Connection Status" in Ethernet diagnostics)	To reduce the Ethernet communication load of the CPU module, increase the service processing time in the service processing setting of the PC parameter.
	Reduce the broadcast data volume on the network. • Identify a broadcasting device, and restrict the broadcast data volume. (Devices such as personal computers or routers.) • Use filtering of broadcast data with a router to prevent the CPU module from receiving them. • Separate the network with frequent broadcasts from the network of the CPU module.
The Ethernet communication load of the CPU module is high.	• Increase the service processing time in the service processing setting of the PLC parameter. • Reduce the number of connected devices. • Reduce the communication frequency per connection and data volume.
The interrupt program is used.	Reduce the frequency and process time of the interrupt program.

15.3.5 Socket communication function

For the details on the socket communication function, refer to the following.

QnUCPU User's Manual (Communication via Built-in Ethernet Port)

(1) The connected device cannot receive data

If data is not delivered to the target device, check the following items.

Check item	Corrective action
The connection has not been opened yet. (Check the corresponding bit in SD1282.)	Wait until the connection is completed.
An error is detected in Ethernet diagnostics.	Remove the error cause.
A parameter or a setting data for SOCOPEN is incorrect.	Correct the parameter or setting data.
The SOCSND instruction is not executed. (Check the start contact and error completion device.)	Correct the execution condition, or remove the error cause that is identified by the error code in the completion status area of the SOCSND instruction.
The connected device has an error.	Correct the error of the connected device.

(2) Data cannot be received

If the CPU cannot receive data from the connected device, check the following items.

Check item	Corrective action
The connection has not been opened yet. (Check the corresponding bit in SD1282.)	Wait until the connection is completed.
An error is detected in Ethernet diagnostics.	Remove the error cause.
A parameter or a setting data for SOCOPEN is incorrect.	Correct the parameter or setting data.
The SOCRCV instruction was not executed. (Check the start contact and error completion device.)	Correct the execution condition, or remove the error cause that is identified by the error code in the completion status area of the SOCOPEN instruction.
The connected device has an error.	Correct the error of the connected device.

(3) The open processing is not completed

If the open processing is not completed, check the following items.

(a) Passive open

Check item	Corrective action
The parameter is incorrect.	Correct the parameter.
The connected device has an error.	Correct the error of the connected device.

(b) Active open

Check item	Corrective action
An error is detected in Ethernet diagnostics.	Remove the error cause.
A parameter or a setting data for SOCOPEN is incorrect.	Correct the parameter or setting data.
The SOCRCV instruction was not executed. (Check the start contact and error completion device.)	Correct the execution condition, or remove the error cause that is identified by the error code in the completion status area of the SOCRCV instruction.
The connected device has an error.	Correct the error of the connected device.

15.3.6 Simple PLC communication function

For details on the simple PLC communication function, refer to the following.

QnUCPU User's Manual (Communication via Built-in Ethernet Port)

(1) Communication with a communication target station is not possible.

If the specified device data cannot be communicated with a target station, check the following items.

Check item	Corrective action
An error was detected in the simple PLC communication status diagnostics, or Ethernet diagnostics (simple PLC communication status).	Remove the cause of the error. When communication is enabled by increasing the communication retry count and communication time-out period, revise the communication retry count and communication time-out period, or, check the status of devices (such as cables, hubs, and routers) on the Ethernet network, and confirm that the traffic on the communication line is not heavy.
The simple PLC communication status does not change from "Preparing".	Check that the cable between the CPU module and the hub is connected properly and that the hub operates normally.
After the simple PLC communication setting was changed, the CPU module has not been powered off and on or has not been reset.	Power off and on or reset the CPU module to which the setting is written.

If communication cannot be performed even after taking the above actions, the possible cause is a hardware failure.

Please consult your local Mitsubishi representative.

(2) Communication with a communication target station is unstable.

If communication with a target station is unstable, check the following items.

Check item	Corrective action
An error was detected in the simple PLC communication status diagnostics, or Ethernet diagnostics (simple PLC communication status).	Remove the cause of the error.
The communication retry has occurred.	Check the status of devices (such as cables, hubs, and routers) on the Ethernet network, and confirm that the traffic on the communication line is not heavy.

(3) Communication is not performed at preset intervals.

If communication is not performed at preset intervals, check the following items.

Check item	Corrective action
Too many settings are configured for one communication target module in the simple PLC communication setting, or, a communication retry has occurred in communications with the same target module which has a different setting number.	• Reduce the number of settings for one communication target module. (Put several settings into one setting as much as possible.) • Remove the cause of the communication retry that has occurred in communications with the same target module which has a different setting number.
Another Ethernet function is simultaneously executed in a CPU module which is set to perform the simple PLC communication.	Reconsider the Ethernet function which is simultaneously executed in the CPU module which is set to perform the simple PLC communication.
The service processing (such as monitoring) load is high or the scan time is long in the communication target CPU module.	• When the model of the communication target is the one supported by the service processing setting, increase the number or time of the service processing. • When the communication target is the Q00(J)CPU, Q01CPU, Qn(H)CPU, or QnPHCPU, increase the value in Time reserved for communication processing (SM315 and SD315). • When the communication target is the QnACPU, use separate Ethernet modules for the simple PLC communication function and the other functions (service processing). In the "PLC system" tab in "PLC parameter" of the destination QnACPU, increase the value of "General data processing". • When the communication target supports the COM or CCOM instruction, use these instructions in the sequence program of the communication target. • Revise the preset interval.
The load of Ethernet communication is high.	Check the status of devices (such as cables, hubs, and routers) on the Ethernet network, and reduce the load or improve the communication quality.
The quality of Ethernet communication is low.	
The communication destination is an SLMP-compatible device (QnA-compatible 3E frame) and the response from the SLMP-compatible device is delayed.	• Check the function execution status of the communication destination. • Revise the preset interval.

(4) The update by reading and writing the device data is slow.

If the update by reading and writing the device data is slow, check the following.

Check item	Corrective action
The scan time is long in the communication target CPU module which is set to perform the simple PLC communication.	Use the COM or CCOM instructions in the sequence program of the CPU module which is set to perform the simple PLC communication.

15.3.7 MC protocol function

If an error occurs during MC protocol communication, check the following items.

Check item	Corrective action
The connected device does not send a command.	Send a command to the CPU module.
No response is returned from the device to which the command is sent.	Make sure the following: • The communication protocol (TCP/IP) is consistent between the CPU module and the target device. • The command is sent to the port number specified in the open setting of the CPU module. • The sent command matches with the Communication data code setting (binary/ASCII). • The value of the sent sub-header is normal. • Data of the request data length is sent. • Requests from the multiple connected devices are simultaneously sent to the single MC protocol port specified in the open setting. If no response is returned from the connected device even though all items mentioned above are normal, communication with the connected device is possibly failed. Check the items described in Page 306, Section 15.3.4 (3).
The end code of the response is not "0".	According to the end code or error code, repair the error part.
The IP address specified in the command is not correct.	Correct the IP address.
Command format specifications such as command type, device, or address are not correct.	Correct the command format. (MELSEC Communication Protocol Reference Manual)
The length of the data to be received and the volume of actually received data are not the same when using TCP.	Provide the processing for receiving remaining data when the actual data is less than the response data length of the receive message.*1 When the operation above is already performed, the possible cause is a hardware failure. Please consult your local Mitsubishi representative.

If an error occurs during MC protocol communication even after taking the above actions, the possible cause is a hardware failure.
Please consult your local Mitsubishi representative.

*1 Two or more receive instructions may need to be executed to read the data sent by one send instruction since TCP does not have architecture for specifying data boundaries.
For this reason, the received data size must be checked when receiving, and receive the remaining data if received data size is insufficient.
For details, refer to the following.
QnUCPU User's Manual (Communication via Built-in Ethernet Port)

15.3.8 Predefined protocol function

(1) Data communication is not possible

If data communication through the predefined protocol function is not possible, check the following items.

Check item	Corrective action
The relevant connection has not been opened.	Perform OPEN processing of the connection with the external device.
In "Open Settings" for "Built-in Ethernet port setting" in PLC parameter, "Predefined protocol" is not selected for "Open system".	Set the "Open system" to "Predefined protocol".
SM1354 (Predefined protocol ready) is not turned on.	After the protocol setting is written, turn off and on the power, reset, or check the protocol setting.
Execution instruction for the predefined protocol is completed with an error.	Check the execution result in the completion status area of the predefined protocol execution instruction and eliminate the error cause.
In the control data of the predefined protocol execution instruction, the execution protocol number is not specified, or the specified protocol number is outside the range.	Specify the execution protocol number in the control data of the predefined protocol execution instruction.
Communication status of the external device is abnormal.	Correct the error of the external device.

(2) Reading or writing of the protocol setting is not possible.

If reading or writing of the protocol setting is not possible, check the following items.

Check item	Corrective action
(Reading) The protocol setting data cannot be read.	Check whether the protocol setting is written to the target drive. If the value for SD1359 to SD1362 (Predefined protocol setting data error information) is 0 and SD1363 (Number of protocols registered) is 0, protocol setting has not been written to the target drive.
(Writing) At power-on, reset or protocol setting check after the protocol setting is written to the CPU module, the protocol setting data error (error code) occurs.	Check that the written protocol setting is correct. Check SD1359 to SD1362 (Predefined protocol setting data error information) and correct the protocol where the protocol setting data error was detected (protocol number, packet number, component number). After correction, write the protocol setting again.

If communication is not possible even after taking the above actions, the possible cause is a hardware failure. Please consult your local Mitsubishi representative.

15.3.9 Transmission from an external device

If no response is returned from an external device, check the following items.

Check item	Corrective action
More than one external device is communicating with the CPU module.	• Adjust the service processing time in parameter. • Adjust the value of communication time check period or number of retries. • Check the condition of the cables, connected device (personal computer), and CPU module.
The data logging function is used.	Refer to the troubleshooting section of the following manual. QnUDVCPU/LCPU User's Manual (Data Logging Function)

If communication cannot be performed even after taking the above actions, the possible cause is a hardware failure. Please consult your local Mitsubishi representative.

15.3.10 Operating status of the CPU module

If it takes time for the CPU module to switch the operating status, check the following items.

Check item	Corrective action
The data logging function is used.	Refer to the troubleshooting section of the following manual. QnUDVCPU/LCPU User's Manual (Data Logging Function)

If communication cannot be performed even after taking the above actions, the possible cause is a hardware failure. Please consult your local Mitsubishi representative.

15.3.11 Errors caused by SFC program instruction

(1) "OPERATION ERROR" has occurred at execution of the S(P).SFCSCOMR and S(P).SFCTCOMR instructions

Check that the values of the following instruction devices are within the range.

- n1 (Block No.)
- n2 (Number of reading comments)
- n3 (Number of reading comments per scan)

When the values of the instruction devices shown above are within the range, set the comment file stored in the memory other than ATA card[*1] as "Comment file used in a command".

*1 Program memory, Standard ROM, SRAM card and Flash card.

(2) Comments cannot be read at execution of the S(P).SFCSCOMR and S(P).SFCTCOMR instructions

Check the following items.

Check item	Corrective action
The SFC program has not been run. (Check the special relay (SM331).)	• Run the SFC program. • Set the program execution type of the SFC program to "SCAN".
The comment file to be used for instructions is not set with the "Comment file used in a command" setting of the parameter or with the QCDSET instruction.	• When performing the comment file setting with "Comment file used in a command", correct the parameter. • When performing the comment file setting with the QCDSET instruction, execute the QCDSET instruction.
Though the "Comment file used in a command" setting of the parameter is set to "Use the same file name as the program", the file which has the same name as the SFC program file does not exist in the target memory.	Create a comment file which has the same name as the SFC program file and store it in the target memory.
The block specified with the S(P).SFCSCOMR and S(P).SFCTCOMR instructions is not activated.	Correct the block specified with the instruction or review the executing condition of instruction. (The comment of the active step or the comment of transfer condition associating with the active step cannot be read, since the block specified with the instruction is not activated.)
An activated step does not exist in the block specified with the S(P).SFCSCOMR and S(P).SFCTCOMR instructions.	Review the executing condition of instruction. (The comment of the active step or the comment of transfer condition associating with the active step cannot be read, since no activated step exists in the block specified with the instruction.)

15.3.12 I/O module

(1) The LEDs of the output module do not turn on

When the LEDs of the output module or output side of the I/O combined module do not turn on, check the following items.

Check item	Corrective action
The corresponding output is OFF when monitored with the programming tool.	Reexamine the program.
The output number mismatches the module when checked with System monitor of the programming tool.	Change the output number.
The LED does not turn on even though the output of another I/O module is forcibly turned on.	The CPU module, base unit, or extension cable has a hardware error. Please consult your local Mitsubishi representative.
The LED does not turn on even when it is forcibly turned on after the module is replaced with another I/O module.	
The LED turns on when it is forcibly turned on after the module is replaced with another I/O module.	The module has a hardware failure. Please consult your local Mitsubishi representative.

(2) Output load does not turn on

When the output load of the output module or I/O combined module does not turn on, check the following items.

Check item	Corrective action
The LED corresponding to the module is not on.	Check the items described in ☞ Page 317, Section 15.3.12 (1).
Voltage for the power supply load is not added.	Check the power supply load wiring and recover the power supply.
Voltage among the output COM terminals is 0V.	Check the load wire and load, and recover the power supply.
The inrush current has exceeded the specified value when the maximum number of outputs turns on simultaneously.	Change the output relay number and keep the load maximum simultaneous on current within the specified value.
The module normally operates when replaced with another I/O module.	The module has a hardware failure. Please consult your local Mitsubishi representative.

15.3.13 Power supply module

(1) The $\overline{\text{LIFE OUT}}$ terminal has turned off (opened)

If the $\overline{\text{LIFE OUT}}$ terminal turns off at power-on or during operation of the programmable controller, check the LED status of the power supply module.

- LED indication and module status during operation (Page 235, Section 7.2.5)
- Troubleshooting (Page 293, Section 15.1)

(2) The $\overline{\text{ERR.}}$ terminal has turned off (opened)

If the $\overline{\text{ERR.}}$ terminal turns off at power-on or during operation of the programmable controller, check the following items.

Check item	Corrective action
The ERR. LED of the CPU module flickers.	Remove the error cause. (Page 298, Section 15.2)
Power of proper voltage is not supplied.	Supply power of proper voltage.
The POWER LED does not turn on in green even after the power supply module are removed and mounted to the normal base unit. (Do not mount any modules other than the power supply module.)	The power supply module is failed. Replace the power supply module with a normal one.
The internal current consumption for the entire system exceeds the rated output current of the power supply module.	Reexamine the system configuration so that the internal current consumption does not exceed the rated output current. (Page 697, Appendix 10)

If the $\overline{\text{ERR.}}$ terminal turns off after taking the above actions, the possible cause is a hardware failure.
Check the system operation in the order of size, the smallest system first. For the module that does not operate, please consult your local Mitsubishi representative.

Point

If a CPU module stop error occurs during use of two redundant power supply modules, the error is output from the $\overline{\text{ERR.}}$ terminals of the two redundant power supply modules.
For details on the $\overline{\text{ERR.}}$ terminals, refer to the following.

- Power supply module specifications (Page 212, Section 7.2)
- Wiring to power supply module (Page 105, Section 4.8.1)

(a) Errors that can be detected by the ERR. terminal

The following shows the errors that can be detected by the $\overline{\text{ERR.}}$ terminal of the power supply module in a single power supply system/redundant power supply system.

• Single power supply system

Base unit	CPU module*1		
	Basic model QCPU, High Performance model QCPU, Universal model QCPU	Process CPU	Redundant CPU
Main base unit (Q3□B)	AC power not input, power supply module fuse blown and CPU module stop error (including reset) can be detected.		
Multiple CPU high speed main base unit (Q3□DB)			
Extension base unit (Q6□B)	Errors cannot be detected (always off).		(Cannot be added)
Slim type main base unit (Q3□SB)	AC power not input, power supply module fuse blown and CPU module stop error (including reset) can be detected.	(cannot be combined)	

*1 Excluding the Q00JCPU and Q00UJCPU (without $\overline{\text{ERR.}}$ terminal).

• Redundant power supply system

Base unit	CPU module*2	
	Basic model QCPU, High Performance model QCPU, Process CPU, Universal model QCPU	Redundant CPU
Redundant power main base unit (Q3□RB)	AC power not input, power supply module fuse blown, CPU module stop error (including reset), and redundant power supply module failure can be detected.	
Redundant power extension base unit (Q6□RB)	Power supply failure, AC power not input, and power supply module fuse blown can be detected.	Power supply failure, AC power not input, and power supply module fuse blown can be detected.*3
Redundant type extension base unit (Q6□WRB)	(cannot be combined)	Power supply failure, AC power not input, and power supply module fuse blown can be detected.

*2 Excluding the Q00JCPU and Q00UJCPU (without $\overline{\text{ERR.}}$ terminal).

*3 Available only for the 2nd extension stage or later in a redundant system where the Redundant CPU whose serial number (first five digits) is "09012" or later is used.

Remark

In the redundant power supply system, the failure of the redundant power supply module can also be detected by using the programming tool. Note 15.1, Note 15.2

- Detection by PLC diagnostics
- Detection by System monitor

For details on the PLC diagnostics and System monitor, refer to the following.

Operating manual for the programming tool used

Note 15.1 **Basic**

Failure of redundant power supply module cannot be detected by the Basic model QCPU.

Note 15.2 **High performance** **Process**

When using the High Performance QCPU or Process CPU, check the versions of the CPU module and programming tool used.

High Performance model QCPU (Page 660, Appendix 6.2)

Process CPU (Page 666, Appendix 6.4)

15.4 Saving Data

By saving the following data immediately after trouble arises, the data can be useful for analyzing the error cause.

- Programs and parameters
- Device data and buffer memory data
- System configuration data
- Error history

(1) Saving programs and parameters

The following describes a procedure for saving data.

[Online]⇨[Read from PLC]

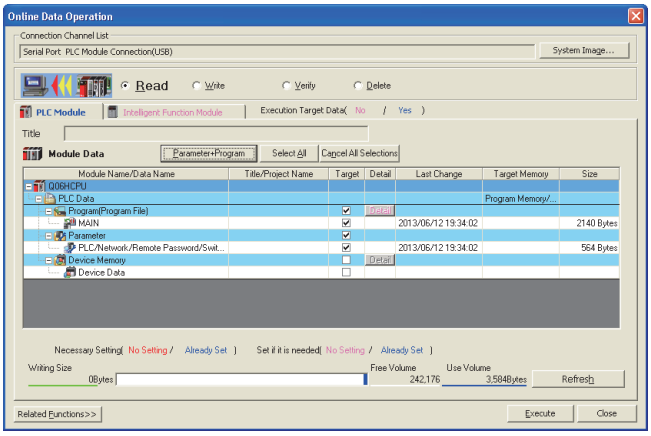

1. **Click the** Parameter+Program **button.**

2. **Click the** Execute **button to execute Read from PLC.**

(2) Saving device data and buffer memory data

The following describes a procedure for saving data.

[Online]⇨[Read from PLC]

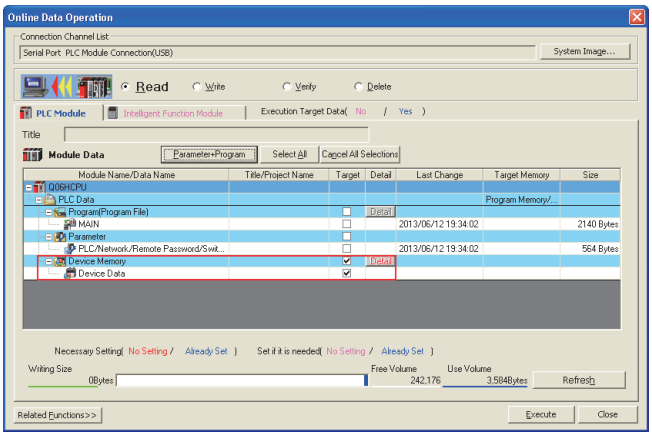

1. **Select "Device Memory".**

2. **Click the Detail button.**

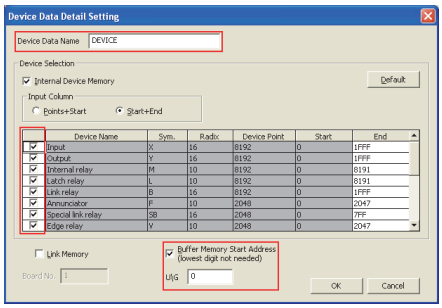

3. **Fill in the "Device Data Name" field and select the checkboxes of devices to be saved.**

4. **Enter the start I/O number in the "Buffer Memory Start Address" field.**

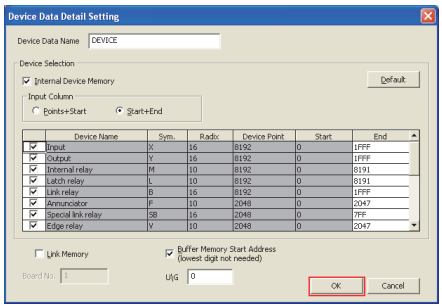

5. **Click the OK button, and execute Read from PLC.**

Point

When using a file register, also save file register data.

(3) Saving system configuration data

The following describes a procedure for saving data.

[Diagnostics]⇨[System Monitor]

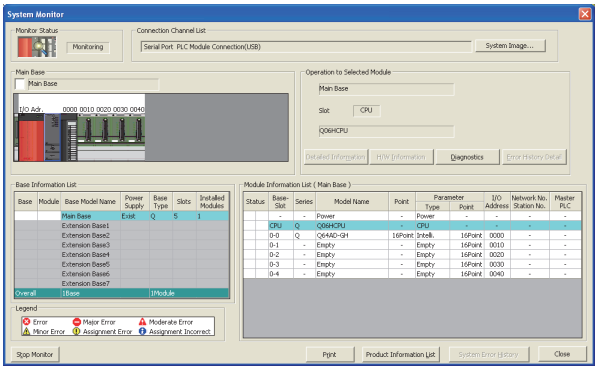

1. Click the Product Information List button.

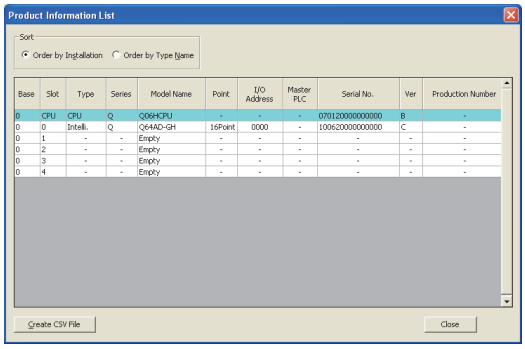

2. Click the Create CSV File button.

(4) Saving error history

The following describes a procedure for saving data.

[Diagnostics]⇨[System Monitor]

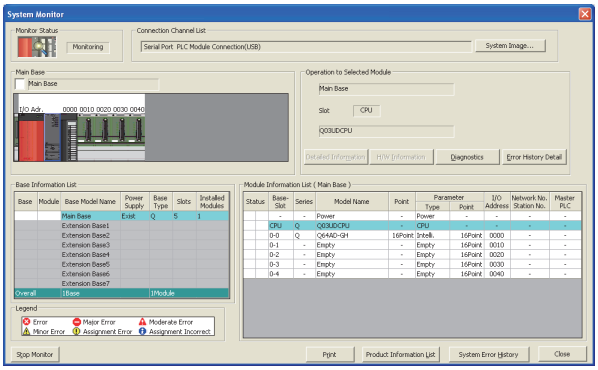

1. **Click the** System Error History **button.**

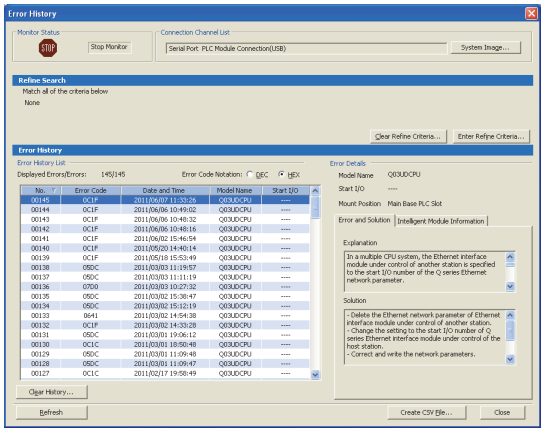

2. **Click the** Clear History... **button.**

Memo

APPENDICES

Appendix 1 Error Codes

When an error occurs at power-on, at switching from STOP to RUN or during RUN, the CPU module indicates the error (LED indication and a message on a display device) by the self-diagnostic function and stores the error information in the special relay (SM) and special register (SD).
When an error occurs at communication request from a programming tool, intelligent function module, or network system to the CPU module, the CPU module returns the error code (4000_H to $4FFF_H$) to the request source.
This section describes errors that may occur in the CPU module and corrective actions for the errors.

(1) How to read error code lists

The following describes how to read Appendix 1.3 Error code list (1000 to 1999) to Appendix 1.9 Error code list (7000 to 10000).
Each list contains errors in QCPU and LCPU.

(a) Error code, common information, and individual information

The error code is stored in SD0. The common information is stored in SD5 to SD15. The individual information is stored in SD16 to SD26.

(b) Corresponding CPU

- QCPU: All the Q series CPU modules
- Q00J/Q00/Q01: Basic model QCPU
- Qn(H): High Performance model QCPU
- QnPH: Process CPU
- QnPRH: Redundant CPU
- QnU: Universal model QCPU
- QnUDV: High-speed Universal model QCPU
- QnUDPV: Universal model Process CPU
- Q00UJ/Q00U/Q01U: Q00UJCPU, Q00UCPU, and Q01UCPU
- LCPU: All the L series CPU modules
- CPU module model: Only the specified model (Example: Q02UCPU, L26CPU-BT)

Appendix 1.1 Error codes

There are two types of errors: errors detected by the self-diagnostic function of the CPU module and errors detected during communication with the CPU module. The following table shows the relationship between the error detection pattern, error location, and error code.

Error detection pattern	Error location	Error code	Reference
By the self-diagnostic function of the CPU module	CPU module	1000 to 10000*1*2	☞ Page 328, Appendix 1.3 to Page 424, Appendix 1.9
During communication with the CPU module	CPU module	4000_H to $4FFF_H$	☞ Page 433, Appendix 1.11
	Serial communication module, etc.	7000_H to $7FFF_H$	User's manuals for the serial communication module, etc.
	CC-Link (including the built-in CC-Link function)	$B000_H$ to $BFFF_H$	User's manuals for the CC-Link system master/local module
	Ethernet (including the built-in Ethernet function)	$C000_H$ to $CFBF_H$	• User's manuals for the Ethernet interface module • QnUCPU User's Manual (Communication via Built-in Ethernet Port) • MELSEC-L CPU Module User's Manual (Built-in Ethernet Function)
	CC-Link IE Field Network Basic	$CFC0_H$ to $CFFF_H$	☞ Page 433, Appendix 1.11
	CC-Link IE Field Network	$D000_H$ to $DFFF_H$	User's manuals for the CC-Link IE Field Network module used
	CC-Link IE Controller Network	$E000_H$ to $EFFF_H$	• Reference manuals for CC-Link IE Controller Network
	MELSECNET/H	$F000_H$ to $FFFF_H$	• Reference manuals for the MELSECNET/H network system • Q Corresponding MELSECNET/H Remote I/O Module Reference Manual (MELSECNET/10 Mode)

*1 Error codes are classified into three levels.
- Minor error: Errors that allow a CPU module to continue its operation, such as a battery error
- Moderate error: Errors that may cause a CPU module to stop its operation, such as a WDT error (Error code: 1300 to 10000)
- Major error: Errors that may cause a CPU module to stop its operation, such as a RAM error (Error code: 1000 to 1299)

Whether the CPU module continues or stops its operation can be checked in the CPU Status column of the Error code list (☞ Page 328, Appendix 1.3 to Page 424, Appendix 1.9).

*2 If an error code that is not described in the list is detected, please consult your local Mitsubishi representative.

Appendix 1.2 Reading error codes

Error codes can be read using a programming tool. For details on the operating method, refer to the following.

📖 Operating manual for the programming tool used

Appendix 1.3 List of error codes (1000 to 1999)

The following table shows the error messages, the error contents and causes, and the corrective actions for the error codes (1000 to 1999).

Error code	Error and cause	Corrective action	LED status, CPU status	Corresponding CPU
1000	**[MAIN CPU DOWN]** Runaway or failure of the CPU module • Malfunction due to noise or other causes • Hardware failure **■Collateral information** • Common information: - • Individual information: Failure information (QnUDVCPU and QnUDPVCPU only) **■Diagnostic timing** • Always	• Take noise reduction measures. • Reset the CPU module and run it again. If the same error code is displayed again, the cause is a hardware failure of the CPU module. Please consult your local Mitsubishi representative.	RUN: Off ERR.:Flashing CPU Status:Stop	QCPU
	[CPU UNIT DOWN] Runaway or failure of the CPU module • Malfunction due to noise or other causes • Hardware failure **■Collateral information** • Common information: - • Individual information: Failure information **■Diagnostic timing** • Always			LCPU
1001	**[MAIN CPU DOWN]** Runaway or failure of the CPU module • Malfunction due to noise or other causes • Hardware failure • The devices outside the range was accessed even though device checks are prohibited (SM237 is on). (This error occurs only when any of the BMOV, FMOV, or DFMOV instructions is executed. (Universal model QCPU only)) **■Collateral information** • Common information: - • Individual information: Failure information (QnUDVCPU and QnUDPVCPU only) **■Diagnostic timing** • Always	• Take noise reduction measures. • Reset the CPU module and run it again. If the same error code is displayed again, the cause is a hardware failure of the CPU module. Please consult your local Mitsubishi representative. • Check the devices specified by BMOV, FMOV, and DFMOV instructions and correct the device settings. (Universal model QCPU only)	RUN: Off ERR.:Flashing CPU Status:Stop	QCPU
	[CPU UNIT DOWN] Runaway or failure of the CPU module • Malfunction due to noise or other causes • Hardware failure • The devices outside the range was accessed even though device checks are prohibited (SM237 is on). (This error occurs only when any of the BMOV, FMOV, or DFMOV instruction is executed.) **■Collateral information** • Common information: - • Individual information: Failure information **■Diagnostic timing** • Always	• Take noise reduction measures. • Reset the CPU module and run it again. If the same error code is displayed again, the cause is a hardware failure of the CPU module. Please consult your local Mitsubishi representative. • Check the devices specified by BMOV, FMOV, and DFMOV instructions and correct the device settings.		LCPU

Error code	Error and cause	Corrective action	LED status, CPU status	Corresponding CPU
1002	**[MAIN CPU DOWN]** Runaway or failure of the CPU module • Malfunction due to noise or other causes • Hardware failure **■Collateral information** • Common information: - • Individual information: Failure information (QnUDVCPU and QnUDPVCPU only) **■Diagnostic timing** • Always	• Take noise reduction measures. • Reset the CPU module and run it again. If the same error code is displayed again, the cause is a hardware failure of the CPU module. Please consult your local Mitsubishi representative.	RUN: Off ERR.:Flashing CPU Status:Stop	QCPU
	[CPU UNIT DOWN] Runaway or failure of the CPU module • Malfunction due to noise or other causes • Hardware failure **■Collateral information** • Common information: - • Individual information: Failure information **■Diagnostic timing** • Always			LCPU
1003	**[MAIN CPU DOWN]** Runaway or failure of the CPU module • Malfunction due to noise or other causes • Hardware failure **■Collateral information** • Common information: - • Individual information: Failure information (QnUDVCPU and QnUDPVCPU only) **■Diagnostic timing** • Always	• Take noise reduction measures. • Reset the CPU module and run it again. If the same error code is displayed again, the cause is a hardware failure of the CPU module. Please consult your local Mitsubishi representative.	RUN: Off ERR.:Flashing CPU Status:Stop	QCPU
	[CPU UNIT DOWN] Runaway or failure of the CPU module • Malfunction due to noise or other causes • Hardware failure **■Collateral information** • Common information: - • Individual information: Failure information **■Diagnostic timing** • Always			LCPU
1004	**[MAIN CPU DOWN]** Runaway or failure of the CPU module • Malfunction due to noise or other causes • Hardware failure **■Collateral information** • Common information: - • Individual information: - **■Diagnostic timing** • Always	• Take noise reduction measures. • Reset the CPU module and run it again. If the same error code is displayed again, the cause is a hardware failure of the CPU module. Please consult your local Mitsubishi representative.	RUN: Off ERR.:Flashing CPU Status:Stop	QCPU (except the QnUDV and QnUDPV)
	[CPU UNIT DOWN] Runaway or failure of the CPU module • Malfunction due to noise or other causes • Hardware failure **■Collateral information** • Common information: - • Individual information: Failure information **■Diagnostic timing** • Always			LCPU

Error code	Error and cause	Corrective action	LED status, CPU status	Corresponding CPU
1005	**[MAIN CPU DOWN]** Runaway or failure of the CPU module • Malfunction due to noise or other causes • Hardware failure **■Collateral information** • Common information: - • Individual information: - **■Diagnostic timing** • Always	• Take noise reduction measures. • Reset the CPU module and run it again. If the same error code is displayed again, the cause is a hardware failure of the CPU module. Please consult your local Mitsubishi representative.	RUN: Off ERR.:Flashing CPU Status:Stop	QCPU (except the QnUDV and QnUDPV)
	[MAIN CPU DOWN] Boot operation was performed in the transfer destination without formatting. **■Collateral information** • Common information: - • Individual information: - **■Diagnostic timing** • At power-on	Before performing boot operation by the parameter, select "Clear program memory" to clear the program memory.		Qn(H) QnPH QnPRH
	[CPU UNIT DOWN] Runaway or failure of the CPU module • Malfunction due to noise or other causes • Hardware failure **■Collateral information** • Common information: - • Individual information: Failure information **■Diagnostic timing** • Always	• Take noise reduction measures. • Reset the CPU module and run it again. If the same error code is displayed again, the cause is a hardware failure of the CPU module. Please consult your local Mitsubishi representative.		LCPU
1006	**[MAIN CPU DOWN]** Runaway or failure of the CPU module • Malfunction due to noise or other causes • Hardware failure **■Collateral information** • Common information: - • Individual information: Failure information (QnUDVCPU and QnUDPVCPU only) **■Diagnostic timing** • Always	• Take noise reduction measures. • Reset the CPU module and run it again. If the same error code is displayed again, the cause is a hardware failure of the CPU module. Please consult your local Mitsubishi representative.	RUN: Off ERR.:Flashing CPU Status:Stop	QCPU
	[CPU UNIT DOWN] Runaway or failure of the CPU module • Malfunction due to noise or other causes • Hardware failure **■Collateral information** • Common information: - • Individual information: Failure information **■Diagnostic timing** • Always			LCPU
1007	**[MAIN CPU DOWN]** Runaway or failure of the CPU module • Malfunction due to noise or other causes • Hardware failure **■Collateral information** • Common information: - • Individual information: - **■Diagnostic timing** • Always	• Take noise reduction measures. • Reset the CPU module and run it again. If the same error code is displayed again, the cause is a hardware failure of the CPU module. Please consult your local Mitsubishi representative.	RUN: Off ERR.:Flashing CPU Status:Stop	Qn(H) QnPH QnPRH
1008	**[MAIN CPU DOWN]** Runaway or failure of the CPU module • Malfunction due to noise or other causes • Hardware failure **■Collateral information** • Common information: - • Individual information: Failure information (QnUDVCPU and QnUDPVCPU only) **■Diagnostic timing** • Always	• Take noise reduction measures. • Reset the CPU module and run it again. If the same error code is displayed again, the cause is a hardware failure of the CPU module. Please consult your local Mitsubishi representative.	RUN: Off ERR.:Flashing CPU Status:Stop	Qn(H) QnPH QnPRH QnUDV QnUDPV

Error code	Error and cause	Corrective action	LED status, CPU status	Corresponding CPU
1009	**[MAIN CPU DOWN]** • The voltage waveform that is outside the specification is applied to the power supply module, and an error is detected. • A failure was detected on the power supply module, CPU module, main base unit, extension base unit or extension cable. • When using the redundant base unit, the redundant power supply module failure in both systems and/or the redundant base unit failure are detected. **■Collateral information** • Common information: - • Individual information: Failure information (QnUDVCPU and QnUDPVCPU only) **■Diagnostic timing** • Always	• Correct the voltage waveform applied to the power supply module. • Reset the CPU module and run it again. If the same error code is detected again, the cause is a failure of the power supply module, CPU module, main base unit, extension base unit, or extension cable. Please consult your local Mitsubishi representative.	RUN: Off ERR.:Flashing CPU Status:Stop	Q00J/Q00/Q01 Qn(H) QnPH QnPRH QnU
	[CPU UNIT DOWN] • A failure was detected on the power supply module or CPU module. • The voltage waveform that is outside the specification is applied to the power supply module, and an error is detected. **■Collateral information** • Common information: - • Individual information: Failure information **■Diagnostic timing** • Always	• Correct the voltage waveform applied to the power supply module. • Reset the CPU module and run it again. If the same error code is displayed again, the cause is a hardware failure of the power supply module or CPU module. Please consult your local Mitsubishi representative.		LCPU
1010	**[END NOT EXECUTE]** Entire program was executed without the execution of an END instruction. • When the END instruction is executed it is read as another instruction code, e.g. due to noise. • The END instruction has been changed to another instruction code somehow. **■Collateral information** • Common information: - • Individual information: - **■Diagnostic timing** • When an END instruction executed	• Take noise reduction measures. • Reset the CPU module and run it again. If the same error code is displayed again, the cause is a hardware failure of the CPU module. Please consult your local Mitsubishi representative.	RUN: Off ERR.:Flashing CPU Status:Stop	QCPU LCPU
1020	**[SFCP. END ERROR]** The SFC program cannot be normally terminated due to noise or other reason. • The SFC program cannot be normally terminated due to noise or any similar cause. • The SFC program cannot be normally terminated for any other reason. **■Collateral information** • Common information: - • Individual information: - **■Diagnostic timing** • When SFC program is executed	• Take noise reduction measures. • Reset the CPU module and run it again. If the same error code is displayed again, the cause is a hardware failure of the CPU module. Please consult your local Mitsubishi representative.	RUN: Off ERR.:Flashing CPU Status:Stop	Q00J/Q00/Q01 QnPH QnU LCPU

Error code	Error and cause	Corrective action	LED status, CPU status	Corresponding CPU
1035	**[MAIN CPU DOWN]** Runaway or failure of the CPU module • Malfunction due to noise or other causes • Hardware failure **■Collateral information** • Common information: - • Individual information: Failure information (QnUDVCPU and QnUDPVCPU only) **■Diagnostic timing** • Always	• Take noise reduction measures. • Reset the CPU module and run it again. If the same error code is displayed again, the cause is a hardware failure of the CPU module. Please consult your local Mitsubishi representative.	RUN: Off ERR.:Flashing CPU Status:Stop	QnU
	[CPU UNIT DOWN] Runaway or failure of the CPU module • Malfunction due to noise or other causes • Hardware failure **■Collateral information** • Common information: - • Individual information: Failure information **■Diagnostic timing** • Always			LCPU
1036	**[MAIN CPU DOWN]** Runaway or failure of the CPU module • Malfunction due to noise or other causes • Hardware failure **■Collateral information** • Common information: - • Individual information: - **■Diagnostic timing** • At power-on/At reset	• Take noise reduction measures. • Reset the CPU module and run it again. If the same error code is displayed again, the cause is a hardware failure of the CPU module. Please consult your local Mitsubishi representative.	RUN: Off ERR.:Flashing CPU Status:Stop	Q50UDEHCPU Q100UDEHCPU
1040	**[CPU UNIT DOWN]** Runaway or failure of the CPU module (built-in I/O) • Malfunction due to noise or other causes • Hardware failure **■Collateral information** • Common information: - • Individual information: Failure information **■Diagnostic timing** • Always	• Take noise reduction measures. • Reset the CPU module and run it again. If the same error code is displayed again, the cause is a hardware failure of the CPU module. Please consult your local Mitsubishi representative.	RUN: Off ERR.:Flashing CPU Status:Stop	LCPU
1041	**[CPU UNIT DOWN]** Runaway or failure of the CPU module (built-in I/O) • Malfunction due to noise or other causes • Hardware failure **■Collateral information** • Common information: - • Individual information: Failure information **■Diagnostic timing** • Always	• Take noise reduction measures. • Reset the CPU module and run it again. If the same error code is displayed again, the cause is a hardware failure of the CPU module. Please consult your local Mitsubishi representative.	RUN: Off ERR.:Flashing CPU Status:Stop	LCPU
1042	**[CPU UNIT DOWN]** Runaway or failure of the CPU module (built-in I/O) • Malfunction due to noise or other causes • Hardware failure **■Collateral information** • Common information: - • Individual information: Failure information **■Diagnostic timing** • Always	• Take noise reduction measures. • Reset the CPU module and run it again. If the same error code is displayed again, the cause is a hardware failure of the CPU module. Please consult your local Mitsubishi representative.	RUN: Off ERR.:Flashing CPU Status:Stop	LCPU
1043	**[MAIN CPU DOWN]** Runaway or failure of the CPU module • Malfunction due to noise or other causes • Hardware failure **■Collateral information** • Common information: - • Individual information: Failure information **■Diagnostic timing** • Always	• Take noise reduction measures. • Reset the CPU module and run it again. If the same error code is displayed again, the cause is a hardware failure of the CPU module. Please consult your local Mitsubishi representative.	RUN: Off ERR.:Flashing CPU Status:Stop	QnUDV QnUDPV

Error code	Error and cause	Corrective action	LED status, CPU status	Corresponding CPU
1044	**[MAIN CPU DOWN]** Runaway or failure of the CPU module • Malfunction due to noise or other causes • Hardware failure **■Collateral information** • Common information: - • Individual information: Failure information **■Diagnostic timing** • Always	• Take noise reduction measures. • Reset the CPU module and run it again. If the same error code is displayed again, the cause is a hardware failure of the CPU module. Please consult your local Mitsubishi representative.	RUN: Off ERR.:Flashing CPU Status:Stop	QnUDV QnUDPV
1045	**[CPU UNIT DOWN]** (1) The module (built-in I/O or built-in CC-Link) status differs from that obtained at power-on. (2) Runaway or failure of the CPU module (built-in I/O, built-in CC-Link) • Malfunction due to noise or other causes • Hardware failure **■Collateral information** • Common information: - • Individual information: Failure information **■Diagnostic timing** • Always	• Take noise reduction measures. • Reset the CPU module and run it again. If the same error code is displayed again, the cause is a hardware failure of the CPU module. Please consult your local Mitsubishi representative.	RUN: Off ERR.:Flashing CPU Status:Stop	LCPU
1101	**[RAM ERROR]** The sequence program storing program memory in the CPU module is faulty. **■Collateral information** • Common information: - • Individual information: - **■Diagnostic timing** • At power-on/At reset/When an END instruction executed	• Take noise reduction measures. • Reset the CPU module and run it again. If the same error code is displayed again, the cause is a hardware failure of the CPU module. Please consult your local Mitsubishi representative.	RUN: Off ERR.:Flashing CPU Status:Stop	QCPU LCPU
1102	**[RAM ERROR]** • The work area RAM in the CPU module is faulty. • The standard RAM in the CPU module is faulty. **■Collateral information** • Common information: - • Individual information: - **■Diagnostic timing** • At power-on/At reset/When an END instruction executed	• Take noise reduction measures. • Reset the CPU module and run it again. If the same error code is displayed again, the cause is a hardware failure of the CPU module. Please consult your local Mitsubishi representative.	RUN: Off ERR.:Flashing CPU Status:Stop	QCPU LCPU
1103	**[RAM ERROR]** The device memory in the CPU module is faulty. **■Collateral information** • Common information: - • Individual information: - **■Diagnostic timing** • At power-on/At reset/When an END instruction executed	• Take noise reduction measures. • When indexing is performed, check the value of index register to see if it is within the device range. • Reset the CPU module and run it again. If the same error code is displayed again, the cause is a hardware failure of the CPU module. Please consult your local Mitsubishi representative.	RUN: Off ERR.:Flashing CPU Status:Stop	QCPU LCPU
	[RAM ERROR] • The device memory in the CPU module is faulty. • The device out of range is accessed due to indexing, and the device for system is overwritten. **■Collateral information** • Common information: - • Individual information: - **■Diagnostic timing** • At power-on/At reset/When an END instruction executed			Qn(H) QnPH QnPRH
1104	**[RAM ERROR]** The address RAM in the CPU module is faulty. **■Collateral information** • Common information: - • Individual information: - **■Diagnostic timing** • At power-on/At reset	• Take noise reduction measures. • Reset the CPU module and run it again. If the same error code is displayed again, the cause is a hardware failure of the CPU module. Please consult your local Mitsubishi representative.	RUN: Off ERR.:Flashing CPU Status:Stop	Q00J/Q00/Q01 Qn(H) QnPH QnPRH

Error code	Error and cause	Corrective action	LED status, CPU status	Corresponding CPU
1105	**[RAM ERROR]** The CPU memory in the CPU module is faulty. **■Collateral information** • Common information: - • Individual information: - **■Diagnostic timing** • At power-on/At reset	• Take noise reduction measures. • Reset the CPU module and run it again. If the same error code is displayed again, the cause is a hardware failure of the CPU module. Please consult your local Mitsubishi representative.	RUN: Off ERR.:Flashing CPU Status:Stop	Q00J/Q00/Q01 QnU
	[RAM ERROR] The CPU shared memory in the CPU module is faulty. **■Collateral information** • Common information: - • Individual information: - **■Diagnostic timing** • At power-on/At reset			Qn(H) QnPH QnPRH QnU
1106	**[RAM ERROR]** The program memory was corrupted due to battery exhaustion. **■Collateral information** • Common information: - • Individual information: - **■Diagnostic timing** • STOP → RUN/When an END instruction executed	• Check the battery to see if it is dead or not. If dead, replace the battery. • Take measures to reduce noise. • Format the program memory, write all files to the CPU module, and reset the module to run it again. If the same error code is displayed again, the cause is a hardware failure of the CPU module. Please consult your local Mitsubishi representative.	RUN: Off ERR.:Flashing CPU Status:Stop	Qn(H) QnPH QnPRH
1107	**[RAM ERROR]** The work area RAM in the CPU module is faulty. **■Collateral information** • Common information: - • Individual information: - **■Diagnostic timing** • At power-on/At reset	The cause is a hardware failure of the CPU module. Please consult your local Mitsubishi representative.	RUN: Off ERR.:Flashing CPU Status:Stop	QnPRH
1108	**[RAM ERROR]** The work area RAM in the CPU module is faulty. **■Collateral information** • Common information: - • Individual information: - **■Diagnostic timing** • At power-on/At reset	The cause is a hardware failure of the CPU module. Please consult your local Mitsubishi representative.	RUN: Off ERR.:Flashing CPU Status:Stop	Qn(H) QnPH QnPRH
1109	**[RAM ERROR]** The work area RAM in the CPU module is faulty. **■Collateral information** • Common information: - • Individual information: - **■Diagnostic timing** • Always	The cause is a hardware failure of the CPU module. Please consult your local Mitsubishi representative.	RUN: Off ERR.:Flashing CPU Status:Stop	Qn(H) QnPH QnPRH
1110	**[TRK. CIR. ERROR]** A fault was detected by the initial check of the tracking hardware. **■Collateral information** • Common information: - • Individual information: - **■Diagnostic timing** • At power-on/At reset	The cause is a hardware failure of the CPU module. Please consult your local Mitsubishi representative.	RUN: Off ERR.:Flashing CPU Status:Stop	QnPRH
1111	**[TRK. CIR. ERROR]** A tracking hardware fault was detected. **■Collateral information** • Common information: - • Individual information: - **■Diagnostic timing** • At power-on/At reset	The cause is a hardware failure of the CPU module. Please consult your local Mitsubishi representative.	RUN: Off ERR.:Flashing CPU Status:Stop	QnPRH

Error code	Error and cause	Corrective action	LED status, CPU status	Corresponding CPU
1112	**[TRK. CIR. ERROR]** • A tracking hardware fault was detected during running. • The tracking cable was disconnected and reinserted without the standby system being powered off or reset. • The tracking cable is not secured by the connector fixing screws. • The error occurred at a startup since the redundant system startup procedure was not followed. **■Collateral information** • Common information: - • Individual information: - **■Diagnostic timing** • During running	• Check that the tracking cable is connected and start up the module. If the same error code is displayed again, the cause is a hardware failure of the tracking cable or CPU module. Please consult your local Mitsubishi representative. • Confirm the redundant system startup procedure, and execute a startup again. For details, refer to the QnPRHCPU User's Manual (Redundant System).	RUN: Off ERR.:Flashing CPU Status:Stop	QnPRH
1113	**[TRK. CIR. ERROR]** • A tracking hardware fault was detected during running. • The tracking cable was disconnected and reinserted without the standby system being powered off or reset. • The tracking cable is not secured by the connector fixing screws. • The error occurred at a startup since the redundant system startup procedure was not followed. **■Collateral information** • Common information: - • Individual information: - **■Diagnostic timing** • During running	• Check that the tracking cable is connected and start up the module. If the same error code is displayed again, the cause is a hardware failure of the tracking cable or CPU module. Please consult your local Mitsubishi representative. • Confirm the redundant system startup procedure, and execute a startup again. For details, refer to the QnPRHCPU User's Manual (Redundant System).	RUN: Off ERR.:Flashing CPU Status:Stop	QnPRH
1115	**[TRK. CIR. ERROR]** A fault was detected by the initial check of the tracking hardware. **■Collateral information** • Common information: - • Individual information: - **■Diagnostic timing** • At power-on/At reset	The cause is a hardware failure of the CPU module. Please consult your local Mitsubishi representative.	RUN: Off ERR.:Flashing CPU Status:Stop	QnPRH
1116	**[TRK. CIR. ERROR]** • A tracking hardware fault was detected during running. • The tracking cable was disconnected and reinserted without the standby system being powered off or reset. • The tracking cable is not secured by the connector fixing screws. • The error occurred at a startup since the redundant system startup procedure was not followed. **■Collateral information** • Common information: - • Individual information: - **■Diagnostic timing** • During running	• Check that the tracking cable is connected and start up the module. If the same error code is displayed again, the cause is a hardware failure of the tracking cable or CPU module. Please consult your local Mitsubishi representative. • Confirm the redundant system startup procedure, and execute a startup again. For details, refer to the QnPRHCPU User's Manual (Redundant System).	RUN: Off ERR.:Flashing CPU Status:Stop	QnPRH
1150	**[RAM ERROR]** The memory of the CPU module in the multiple CPU high speed transmission area is faulty. **■Collateral information** • Common information: - • Individual information: - **■Diagnostic timing** • At power-on/At reset	• Take noise reduction measures. • Reset the CPU module and run it again. If the same error code is displayed again, the cause is a hardware failure of the CPU module. Please consult your local Mitsubishi representative.	RUN: Off ERR.:Flashing CPU Status:Stop	QnU

Error code	Error and cause	Corrective action	LED status, CPU status	Corresponding CPU
1160	**[RAM ERROR]** The program memory in the CPU module is overwritten. **■Collateral information** • Common information: Program error location[*5] • Individual information: - **■Diagnostic timing** • Always	• Take noise reduction measures. • Format the program memory, write all files to the CPU module, and reset the module to run it again. If the same error code is displayed again, the cause is a hardware failure of the CPU module. Please consult your local Mitsubishi representative.	RUN: Off ERR.:Flashing CPU Status:Stop	QnU LCPU
1161	**[RAM ERROR]** The data of the device memory built in the CPU module is overwritten. **■Collateral information** • Common information: Program error location[*5] • Individual information: - **■Diagnostic timing** • Always	Take noise reduction measures. If the same error code is displayed again, the cause is a hardware failure of the CPU module. Please consult your local Mitsubishi representative.	RUN: Off ERR.:Flashing CPU Status:Stop	QnU LCPU
1163	**[RAM ERROR]** The program memory in the CPU module is overwritten. **■Collateral information** • Common information: - • Individual information: - **■Diagnostic timing** • When an instruction executed ("Always" for the QnUDVCPU and QnUDPVCPU)	• Take noise reduction measures. • For GX Works2, select "Transfer cache memory to program memory" in the Options window. For GX Developer, select "Online change T/C setting value change program memory transfer settings" in the Options window. • Format the program memory, write all files to the CPU module, and reset the module to run it again. If the same error code is displayed again, the cause is a hardware failure of the CPU module. Please consult your local Mitsubishi representative.	RUN: Off ERR.:Flashing CPU Status:Stop	QnU LCPU
1164	**[RAM ERROR]** The destruction of the data stored in the standard RAM is detected. **■Collateral information** • Common information: - • Individual information: - **■Diagnostic timing** • When instruction executed	Take noise reduction measures. If the same error code is displayed again, the cause is a hardware failure of the CPU module. Please consult your local Mitsubishi representative.	RUN: Off ERR.:Flashing CPU Status:Stop	QnU[*6] L26CPU L26CPU-P L26CPU-BT L26CPU-PBT
1166	**[RAM ERROR]** The internal memory in the CPU module is faulty. **■Collateral information** • Common information: - • Individual information: - **■Diagnostic timing** • Always	Take noise reduction measures. If the same error code is displayed again, the cause is a hardware failure of the CPU module. Please consult your local Mitsubishi representative.	RUN: Off ERR.:Flashing CPU Status:Stop	Q50UDEHCPU, Q100UDEHCPU
1170	**[RAM ERROR]** The RAM of the CPU module (built-in I/O) is faulty. **■Collateral information** • Common information: - • Individual information: Failure information **■Diagnostic timing** • At power-on/At reset	Take noise reduction measures. If the same error code is displayed again, the cause is a hardware failure of the CPU module. Please consult your local Mitsubishi representative.	RUN: Off ERR.:Flashing CPU Status:Stop	LCPU
1171	**[RAM ERROR]** The RAM of the CPU module (built-in I/O) is faulty. **■Collateral information** • Common information: - • Individual information: Failure information **■Diagnostic timing** • Always	Take noise reduction measures. If the same error code is displayed again, the cause is a hardware failure of the CPU module. Please consult your local Mitsubishi representative.	RUN: Off ERR.:Flashing CPU Status:Stop	LCPU
1172	**[RAM ERROR]** The RAM of the CPU module (built-in I/O) is faulty. **■Collateral information** • Common information: - • Individual information: Failure information **■Diagnostic timing** • At power-on/At reset	Take noise reduction measures. If the same error code is displayed again, the cause is a hardware failure of the CPU module. Please consult your local Mitsubishi representative.	RUN: Off ERR.:Flashing CPU Status:Stop	LCPU

Error code	Error and cause	Corrective action	LED status, CPU status	Corresponding CPU
1200	**[OPE. CIRCUIT ERR.]** The operation circuit for index modification in the CPU module does not operate normally. **■Collateral information** • Common information: - • Individual information: - **■Diagnostic timing** • At power-on/At reset	The cause is a hardware failure of the CPU module. Please consult your local Mitsubishi representative.	RUN: Off ERR.:Flashing CPU Status:Stop	QCPU LCPU
1201	**[OPE. CIRCUIT ERR.]** The hardware (logic) in the CPU module does not operate normally. **■Collateral information** • Common information: - • Individual information: - **■Diagnostic timing** • At power-on/At reset	The cause is a hardware failure of the CPU module. Please consult your local Mitsubishi representative.	RUN: Off ERR.:Flashing CPU Status:Stop	QCPU LCPU
1202	**[OPE. CIRCUIT ERR.]** The operation circuit for sequence processing in the CPU module does not operate normally. **■Collateral information** • Common information: - • Individual information: - **■Diagnostic timing** • At power-on/At reset	The cause is a hardware failure of the CPU module. Please consult your local Mitsubishi representative.	RUN: Off ERR.:Flashing CPU Status:Stop	QCPU LCPU
1203	**[OPE. CIRCUIT ERR.]** The operation circuit for index modification in the CPU module does not operate normally. **■Collateral information** • Common information: - • Individual information: - **■Diagnostic timing** • When an END instruction executed	The cause is a hardware failure of the CPU module. Please consult your local Mitsubishi representative.	RUN: Off ERR.:Flashing CPU Status:Stop	QnPRH
1204	**[OPE. CIRCUIT ERR.]** The hardware (logic) in the CPU module does not operate normally. **■Collateral information** • Common information: - • Individual information: - **■Diagnostic timing** • When an END instruction executed	The cause is a hardware failure of the CPU module. Please consult your local Mitsubishi representative.	RUN: Off ERR.:Flashing CPU Status:Stop	QnPRH
1205	**[OPE. CIRCUIT ERR.]** The operation circuit for sequence processing in the CPU module does not operate normally. **■Collateral information** • Common information: - • Individual information: - **■Diagnostic timing** • When an END instruction executed	The cause is a hardware failure of the CPU module. Please consult your local Mitsubishi representative.	RUN: Off ERR.:Flashing CPU Status:Stop	QnPRH

Error code	Error and cause	Corrective action	LED status, CPU status	Corresponding CPU
1300	**[FUSE BREAK OFF]** There is an output module with a blown fuse. **■Collateral information** • Common information: Module No. (Slot No.) [For Remote I/O network] Network No./Station No. • Individual information: - **■Diagnostic timing** • Always	• Check the FUSE. LED of each output module, and replace the one whose LED is on. • Read common information of the error using the programming tool to identify the numeric value (module No.). Replace the fuse of the output module corresponding to the value. Or, monitor SD1300 to SD1331 using the programming tool to identify the module whose data bit is "1". Replace the fuse of the corresponding module. • When a GOT is bus-connected to the main base unit or extension base unit, check the connection status of the extension cable and the grounding status of the GOT.	RUN: Off/On ERR.:Flashing/On CPU Status: Stop/Continue[*1]	Qn(H) QnPH QnPRH QnU
	[FUSE BREAK OFF] There is an output module with a blown fuse. **■Collateral information** • Common information: Module No. (Slot No.) [For Remote I/O network] Network No./Station No. • Individual information: - **■Diagnostic timing** • Always	Check the ERR. LED of each output module, and replace the one whose LED is on. (A blown fuse can be identified with the programming tool. Check SD130 to SD137 to ensure that the bit for the module with a blown fuse is "1".)		Q00J/Q00/Q01
	[FUSE BREAK OFF] There is an output module with a blown fuse on the LA1S extension base unit. **■Collateral information** • Common information: Module No. (Slot No.) • Individual information: - **■Diagnostic timing** • Always	• Check the FUSE. LED of each output module, and replace the one whose LED is on. • Read common information of the error using the programming tool to identify the numeric value (module No.). Replace the fuse of the output module corresponding to the value. Or, monitor SD1300 to SD1331 using the programming tool to identify the module whose data bit is "1". Replace the fuse of the corresponding module.		LCPU
1310	**[I/O INT. ERROR]** Although an interrupt request was detected, there is no interrupt factor. **■Collateral information** • Common information: - • Individual information: - **■Diagnostic timing** • During interrupt	The cause is a hardware failure of any one of the mounted modules. Check the mounted modules and replace the faulty module. Please consult your local Mitsubishi representative.	RUN: Off ERR.:Flashing CPU Status:Stop	QCPU
	[I/O INT. ERROR] An interruption occurred although none of the modules can issue an interruption (including an interruption from the built-in I/O). **■Collateral information** • Common information: - • Individual information: - **■Diagnostic timing** • During interrupt	Reset the CPU module and run it again. If the same error code is displayed again, the cause is a hardware failure of the CPU module, I/O module, intelligent function module, END cover, branch module, or extension module. Please consult your local Mitsubishi representative.	RUN: Off ERR.:Flashing CPU Status:Stop	LCPU

Error code	Error and cause	Corrective action	LED status, CPU status	Corresponding CPU
1311	**[I/O INT. ERROR]** An interrupt request was detected from the module for which Interrupt Pointer Setting has not been configured in "PLC Parameter". **■Collateral information** • Common information: - • Individual information: - **■Diagnostic timing** • During interrupt	• Correct the interrupt pointer setting in the PLC System tab of "PLC Parameter". • Take measures not to issue an interruption from the modules where the interrupt pointer setting is not configured in the PLC System tab of "PLC Parameter". • Correct the interrupt setting of the network parameter. • Correct the interrupt setting of the intelligent function module buffer memory. • Correct the basic program of the QD51.	RUN: Off ERR.:Flashing CPU Status:Stop	Q00J/Q00/Q01 QnPRH QnU
		• Correct the interrupt pointer setting in the PLC System tab of "PLC Parameter". • Take measures not to issue an interruption from the modules where the interrupt pointer setting is not configured in the PLC System tab of "PLC Parameter". • Correct the Interrupt Setting of the network parameter. • Correct the interrupt setting of the intelligent function module buffer memory. • Reset the CPU module and run it again. If the same error code is displayed again, the cause is a hardware failure of the CPU module, I/O module, intelligent function module, END cover, branch module, or extension module. Please consult your local Mitsubishi representative.		LCPU
1320	**[LAN CTRL. DOWN]** The H/W self-diagnostics detected a LAN controller failure. **■Collateral information** • Common information: - • Individual information: - **■Diagnostic timing** • At power-on/At reset	The cause is a hardware failure of the CPU module. Please consult your local Mitsubishi representative.	RUN: Off ERR.:Flashing CPU Status:Stop	QnU*4 LCPU*4
1321	**[LAN CTRL. DOWN]** The H/W self-diagnostics detected a LAN controller failure. **■Collateral information** • Common information: - • Individual information: - **■Diagnostic timing** • At power-on/At reset	The cause is a hardware failure of the CPU module. Please consult your local Mitsubishi representative.	RUN: Off ERR.:Flashing CPU Status:Stop	QnU*4 LCPU*4

Error code	Error and cause	Corrective action	LED status, CPU status	Corresponding CPU
1401	**[SP. UNIT DOWN]** • There was no response from the intelligent function module/special function module in the initial processing. • The size of the buffer memory of the intelligent function module/special function module is invalid. • The unsupported module is mounted. • At power-on/reset, momentary power failure has occurred. **■Collateral information** • Common information: Module No. (Slot No.) • Individual information: - **■Diagnostic timing** • At power-on/At reset/When intelligent function module is accessed	• Check the power supply. • If an unsupported module is mounted, remove it. When only supported modules are mounted, the cause is a hardware failure of the intelligent function module/special function module, CPU module, or base unit. Please consult your local Mitsubishi representative.	RUN: Off/On ERR.:Flashing/On CPU Status: Stop/Continue*3	QCPU
	[SP. UNIT DOWN] • There was no response from the intelligent function module in the initial processing. • The buffer memory size of the intelligent function module is invalid. • An unsupported module is connected. **■Collateral information** • Common information: Module No. (Slot No.) • Individual information: - **■Diagnostic timing** • At power-on/At reset/When intelligent function module is accessed	If an unsupported module is connected, disconnect it. When only supported modules are connected, reset the CPU module to run it again. If the same error code is displayed again, the cause is a hardware failure of the CPU module, I/O module, intelligent function module, END cover, branch module, or extension module. Please consult your local Mitsubishi representative.		LCPU
1402	**[SP. UNIT DOWN]** The intelligent function module/special function module was accessed in the program, but there was no response. **■Collateral information** • Common information: Module No. (Slot No.) • Individual information: Program error location **■Diagnostic timing** • When an intelligent function module access instruction is executed	The cause is a hardware failure of the intelligent function module/special function module, CPU module, or base unit. Please consult your local Mitsubishi representative.	RUN: Off/On ERR.:Flashing/On CPU Status: Stop/Continue*3	QCPU
	[SP. UNIT DOWN] The intelligent function module was accessed by the program, but there was no response. **■Collateral information** • Common information: Module No. (Slot No.) • Individual information: Program error location **■Diagnostic timing** • When an intelligent function module access instruction is executed	Reset the CPU module and run it again. If the same error code is displayed again, the cause is a hardware failure of the CPU module, I/O module, intelligent function module, END cover, branch module, or extension module. Please consult your local Mitsubishi representative.		LCPU

Error code	Error and cause	Corrective action	LED status, CPU status	Corresponding CPU
1403	**[SP. UNIT DOWN]** • The unsupported module is mounted. **■Collateral information** • Common information: Module No. (Slot No.) • Individual information: - **■Diagnostic timing** • Always	If an unsupported module is mounted, remove it. When only supported modules are mounted, the cause is a hardware failure of the intelligent function module/special function module, CPU module, or base unit. Please consult your local Mitsubishi representative.	RUN: Off/On ERR.:Flashing/On CPU Status: Stop/Continue*3	QCPU
	[SP. UNIT DOWN] • There was no response from the intelligent function module/special function module when the END instruction is executed. • An error is detected at the intelligent function module/special function module. • The I/O module (including the intelligent function module/special function module) is nearly disconnected, removed, or mounted while the system is running. **■Collateral information** • Common information: Module No. (Slot No.) • Individual information: - **■Diagnostic timing** • Always	The cause is a failure of the CPU module, base unit, or the intelligent function module/special function module in the access destination. Please consult your local Mitsubishi representative.		
	[SP. UNIT DOWN] • There was no response from the intelligent function module when the END instruction is executed. • An error is detected in the intelligent function module. • The I/O module (including the intelligent function module) is nearly disconnected or removed while the system is running. **■Collateral information** • Common information: Module No. (Slot No.) • Individual information: - **■Diagnostic timing** • Always	Reset the CPU module and run it again. If the same error code is displayed again, the cause is a hardware failure of the CPU module, I/O module, intelligent function module, END cover, branch module, or extension module. Please consult your local Mitsubishi representative.		LCPU
1411	**[CONTROL-BUS ERR.]** When I/O assignment parameters are set, the CPU module cannot access the intelligent function module/special function module during initial communications. (If an error occurs, the start I/O number of the corresponding intelligent function module/special function module is stored in the common information.) **■Collateral information** • Common information: Module No. (Slot No.) • Individual information: - **■Diagnostic timing** • At power-on/At reset	Reset the CPU module and run it again. If the same error code is displayed again, the cause is a failure of the intelligent function module/special function module, CPU module, or base unit. Please consult your local Mitsubishi representative.	RUN: Off ERR.:Flashing CPU Status:Stop	QCPU
1412	**[CONTROL-BUS ERR.]** The FROM/TO instruction is not executable, due to a control bus error with the intelligent function module/special function module. (If an error occurs, the program error location is stored in the individual information.) **■Collateral information** • Common information: Module No. (Slot No.) • Individual information: Program error location **■Diagnostic timing** • During execution of FROM/TO instruction set	Reset the CPU module and run it again. If the same error code is displayed again, the cause is a failure of the intelligent function module/special function module, CPU module, or base unit. Please consult your local Mitsubishi representative.	RUN: Off ERR.:Flashing CPU Status:Stop	QCPU

Error code	Error and cause	Corrective action	LED status, CPU status	Corresponding CPU
1413	**[CONTROL-BUS ERR.]** In a multiple CPU system, a CPU module incompatible with the multiple CPU system is mounted. **■Collateral information** • Common information: - • Individual information: - **■Diagnostic timing** • Always	• Remove the CPU module from the main base unit if it does not support a multiple CPU system configuration. Alternatively, replace the CPU module that does not support a multiple system configuration with the one that does. • The cause is a failure of the intelligent function module, CPU module, or base unit. Please consult your local Mitsubishi representative.	RUN: Off ERR.:Flashing CPU Status:Stop	Q00J/Q00/Q01 Qn(H) QnPH
	[CONTROL-BUS ERR.] (1) An error is detected on the system bus. • Self-diagnostic error in the system bus • Self-diagnostic error in the CPU module (2) In a multiple CPU system, the control CPU setting of other CPUs, configured in the I/O Assignment tab of "PLC Parameter", differs from that of CPU No.1. **■Collateral information** • Common information: - • Individual information: - **■Diagnostic timing** • Always	• Reset the CPU module and run it again. If the same error code is displayed again, the cause is a failure of the intelligent function module, CPU module, or base unit. Please consult your local Mitsubishi representative. • Reconfigure the control CPU setting of other CPUs so that it can be the same as that of CPU No.1.		QCPU
1414	**[CONTROL-BUS ERR.]** • Fault of a loaded module was detected. • In a multiple CPU system, a CPU module incompatible with the multiple CPU system is mounted. **■Collateral information** • Common information: Module No. (Slot No.) • Individual information: - **■Diagnostic timing** • Always	• Remove the CPU module from the main base unit if it does not support a multiple CPU system configuration. Alternatively, replace the CPU module that does not support a multiple system configuration with the one that does. • Reset the CPU module and run it again. If the same error code is displayed again, the cause is a failure of the intelligent function module, CPU module, or base unit. Please consult your local Mitsubishi representative.	RUN: Off ERR.:Flashing CPU Status:Stop	Q00J/Q00/Q01 Qn(H) QnPH QnU
	[CONTROL-BUS ERR.] An error is detected on the system bus. **■Collateral information** • Common information: Module No. (Slot No.) • Individual information: - **■Diagnostic timing** • Always	• Remove the CPU module from the main base unit if it does not support a multiple CPU system configuration. Alternatively, replace the CPU module that does not support a multiple system configuration with the one that does. • Reset the CPU module and run it again. If the same error code is displayed again, the cause is a failure of the intelligent function module, CPU module, or base unit. Please consult your local Mitsubishi representative.		Q00J/Q00/Q01 Qn(H) QnPH QnPRH QnU
1415	**[CONTROL-BUS ERR.]** Fault of the main or extension base unit was detected. **■Collateral information** • Common information: Module No. (Base No.) • Individual information: - **■Diagnostic timing** • Always	Reset the CPU module and run it again. If the same error code is displayed again, the cause is a failure of the intelligent function module, CPU module, or base unit. Please consult your local Mitsubishi representative.	RUN: Off ERR.:Flashing CPU Status:Stop	Q00J/Q00/Q01 Qn(H) QnPH QnPRH QnU
	[CONTROL-BUS ERR.] Fault of the main or extension base unit was detected. **■Collateral information** • Common information: Module No. (Slot No.) • Individual information: - **■Diagnostic timing** • At power-on/At reset/When an END instruction executed			Qn(H)*7 QnPH*7

Error code	Error and cause	Corrective action	LED status, CPU status	Corresponding CPU
1416	**[CONTROL-BUS ERR.]** An error was detected on the system bus. **■Collateral information** • Common information: Module No. (Slot No.) • Individual information: - **■Diagnostic timing** • At power-on/At reset	Reset the CPU module and run it again. If the same error code is displayed again, the cause is a failure of the intelligent function module, CPU module, or base unit. Please consult your local Mitsubishi representative.	RUN: Off ERR.:Flashing CPU Status:Stop	Qn(H) QnPH QnU
	[CONTROL-BUS ERR.] An error was detected on the system bus in the multiple CPU system. **■Collateral information** • Common information: Module No. (Slot No.) • Individual information: - **■Diagnostic timing** • At power-on/At reset			Q00CPU Q01CPU QnU
1417	**[CONTROL-BUS ERR.]** A reset signal error was detected on the system bus. **■Collateral information** • Common information: - • Individual information: - **■Diagnostic timing** • Always	Reset the CPU module and run it again. If the same error code is displayed again, the cause is a failure of the intelligent function module, CPU module, or base unit. Please consult your local Mitsubishi representative.	RUN: Off ERR.:Flashing CPU Status:Stop	QnPRH
1418	**[CONTROL-BUS ERR.]** • In the debug mode, both the main base unit for system A and the main base unit for system B are connected to an extension base unit. • In the redundant system, the control system cannot access the extension base unit because it has failed to acquire an access right. **■Collateral information** • Common information: - • Individual information: - **■Diagnostic timing** • At power-ON/At reset/At Switching execution	• Check that both the main base unit for system A and the main base unit for system B are not connected to an extension base unit in the debug mode. • Reset the CPU module and run it again. If the same error code is displayed again, the cause is a hardware failure of the CPU module, Q6□WRB, or extension cable. Please consult your local Mitsubishi representative.	RUN: Off ERR.:Flashing CPU Status:Stop	QnPRH
1430	**[MULTI-C.BUS ERR.]** The error of host CPU is detected in the multiple CPU high speed transmission. **■Collateral information** • Common information: - • Individual information: - **■Diagnostic timing** • At power-on/At reset	Reset the CPU module and run it again. If the same error code is displayed again, the cause is a hardware failure of the CPU module. Please consult your local Mitsubishi representative.	RUN: Off ERR.:Flashing CPU Status:Stop	QnU
1431	**[MULTI-C.BUS ERR.]** The communication error with other CPU is detected in the multiple CPU high speed transmission. **■Collateral information** • Common information: Module No. (CPU No.) • Individual information: - **■Diagnostic timing** • At power-on/At reset	• Take noise reduction measures. • Check the main base unit mounting status of the CPU module. • Reset the CPU module and run it again. If the same error code is displayed again, the cause is a hardware failure of the CPU module. Please consult your local Mitsubishi representative.	RUN: Off ERR.:Flashing CPU Status:Stop	QnU
1432	**[MULTI-C.BUS ERR.]** The communication time out with other CPU is detected in the multiple CPU high speed transmission. **■Collateral information** • Common information: Module No. (CPU No.) • Individual information: - **■Diagnostic timing** • At power-on/At reset	Reset the CPU module and run it again. If the same error code is displayed again, the cause is a hardware failure of the CPU module. Please consult your local Mitsubishi representative.	RUN: Off ERR.:Flashing CPU Status:Stop	QnU

Error code	Error and cause	Corrective action	LED status, CPU status	Corresponding CPU
1433	**[MULTI-C.BUS ERR.]** The communication error with other CPU is detected in the multiple CPU high speed transmission. **■Collateral information** • Common information: Module No. (CPU No.) • Individual information: - **■Diagnostic timing** • Always	• Take noise reduction measures. • Check the main base unit mounting status of the CPU module. • Reset the CPU module and run it again. If the same error code is displayed again, the cause is a hardware failure of the CPU module. Please consult your local Mitsubishi representative.	RUN: Off ERR.:Flashing CPU Status:Stop	QnU
1434	**[MULTI-C.BUS ERR.]** The communication error with other CPU is detected in the multiple CPU high speed transmission. **■Collateral information** • Common information: Module No. (CPU No.) • Individual information: - **■Diagnostic timing** • Always	• Take noise reduction measures. • Check the main base unit mounting status of the CPU module. • Reset the CPU module and run it again. If the same error code is displayed again, the cause is a hardware failure of the CPU module. Please consult your local Mitsubishi representative.	RUN: Off ERR.:Flashing CPU Status:Stop	QnU
1435	**[MULTI-C.BUS ERR.]** The communication error with other CPU is detected in the multiple CPU high speed transmission. **■Collateral information** • Common information: Module No. (CPU No.) • Individual information: - **■Diagnostic timing** • Always	• Take noise reduction measures. • Check the main base unit mounting status of the CPU module. • Reset the CPU module and run it again. If the same error code is displayed again, the cause is a hardware failure of the CPU module. Please consult your local Mitsubishi representative.	RUN: Off ERR.:Flashing CPU Status:Stop	QnU
1436	**[MULTI-C.BUS ERR.]** The error of the multiple CPU high speed main base unit is detected. (An error of the multiple CPU high speed transmission is detected.) **■Collateral information** • Common information: - • Individual information: - **■Diagnostic timing** • At power-on/At reset	Reset the CPU module and run it again. If the same error code is displayed again, the cause is a hardware failure of the CPU module. Please consult your local Mitsubishi representative.	RUN: Off ERR.:Flashing CPU Status:Stop	QnU
1437	**[MULTI-C.BUS ERR.]** The error of the multiple CPU high speed main base unit is detected. (An error of the multiple CPU high speed transmission is detected.) **■Collateral information** • Common information: - • Individual information: - **■Diagnostic timing** • At power-on/At reset	• Take noise reduction measures. • Check the main base unit mounting status of the CPU module. • Reset the CPU module and run it again. If the same error code is displayed again, the cause is a hardware failure of the CPU module. Please consult your local Mitsubishi representative.	RUN: Off ERR.:Flashing CPU Status:Stop	QnU
1439	**[MULTI-C.BUS ERR.]** The error of the multiple CPU high speed main base unit is detected. (An error of the multiple CPU high speed transmission is detected.) **■Collateral information** • Common information: - • Individual information: - **■Diagnostic timing** • At power-on/At reset	• Take noise reduction measures. • Reset the CPU module and run it again. If the same error code is displayed again, the cause is a hardware failure of the CPU module. Please consult your local Mitsubishi representative.	RUN: Off ERR.:Flashing CPU Status:Stop	QnU
1500	**[AC/DC DOWN]** • A momentary power supply interruption has occurred. • The power supply went off. **■Collateral information** • Common information: - • Individual information: - **■Diagnostic timing** • Always	Check the power supply.	RUN: On ERR.:Off CPU Status:Continue	QCPU LCPU

Error code	Error and cause	Corrective action	LED status, CPU status	Corresponding CPU
1510	**[SINGLE PS. DOWN]** The power supply voltage of either of redundant power supply modules on the redundant base unit dropped. **■Collateral information** • Common information: Base No./Power supply No. • Individual information: - **■Diagnostic timing** • Always	Check the power supplied to the redundant power supply modules mounted on the redundant base unit.	RUN: On ERR.:On CPU Status:Continue	Qn(H) QnPH QnPRH QnU
1520	**[SINGLE PS. ERROR]** On the redundant base unit, the one damaged redundant power supply module was detected. **■Collateral information** • Common information: Base No./Power supply No. • Individual information: - **■Diagnostic timing** • Always	The cause is a hardware failure of the redundant power supply module. Please consult your local Mitsubishi representative.	RUN: On ERR.:On CPU Status:Continue	Qn(H) QnPH QnPRH QnU
1600	**[BATTERY ERROR*2]** • The battery voltage in the CPU module has dropped below stipulated level. • The lead connector of the CPU module battery is not connected. • The lead connector of the CPU module battery is not securely engaged. **■Collateral information** • Common information: Drive Name • Individual information: - **■Diagnostic timing** • Always	• Change the battery. • Engage the battery connector when a program memory, standard RAM, or the back-up power function is used. • Check the lead connector of the CPU module for looseness. Firmly engage the connector if it is loose.	RUN: On ERR.:Off CPU Status:Continue	QCPU LCPU
1601	**[BATTERY ERROR*2]** Voltage of the battery on memory card has dropped below stipulated level. **■Collateral information** • Common information: Drive Name • Individual information: - **■Diagnostic timing** • Always	Change the battery.	RUN: On ERR.:Off CPU Status:Continue	Qn(H) QnPH QnPRH QnU (except the QnUDV and QnUDPV)
1610	**[FLASH ROM ERROR]** The number of writes to flash ROM (standard ROM and system securement area) exceeds 100,000 times. (Number of writes > 100,000 times) **■Collateral information** • Common information: - • Individual information: - **■Diagnostic timing** • When writing to ROM	Change the CPU module.	RUN: On ERR.:On CPU Status:Continue	QnU LCPU
1630	**[MEM.ACCESS ERROR]** Data cannot be written to the SD memory card because the write protect switch is locked. **■Collateral information** • Common information: - • Individual information: - **■Diagnostic timing** • Always	Unlock the write protect switch of the SD memory card.	RUN: On ERR.:On CPU Status:Continue	QnUDV QnUDPV
1700	**[BUS TIMEOUT ERR.]** An error was detected on the system bus. • Self-diagnosis error of the system bus • Self-diagnosis error of the CPU module **■Collateral information** • Common information: - • Individual information: - **■Diagnostic timing** • Always	Reset the CPU module and run it again. If the same error code is displayed again, the cause is a hardware failure of the CPU module, I/O module, intelligent function module, END cover, branch module, or extension module. Please consult your local Mitsubishi representative.	RUN: Off ERR.:Flashing CPU Status:Stop	LCPU

Error code	Error and cause	Corrective action	LED status, CPU status	Corresponding CPU
1710	**[UNIT BUS ERROR]** • An error was detected on the system bus. • An error was detected in the connected module. **■Collateral information** • Common information: Module No. (Slot No.) • Individual information: - **■Diagnostic timing** • Always	• Disconnect the extension block. • Do not use the LA1S extension base unit. • Reset the CPU module and run it again. If the same error code is displayed again, the cause is a hardware failure of the CPU module, I/O module, intelligent function module, END cover, branch module, or extension module. Please consult your local Mitsubishi representative.	RUN: Off ERR.:Flashing CPU Status:Stop	LCPU
1711	**[UNIT BUS ERROR]** When I/O assignment parameters are set, the CPU module cannot access the special function module during initial communications. (If an error occurs, the start I/O number of the corresponding special function module is stored in the common information.) **■Collateral information** • Common information: Module No. (Slot No.) • Individual information: - **■Diagnostic timing** • At power-on	Reset the CPU module and run it again. If the same error code is displayed again, the cause is a hardware failure of the LA1S extension base unit. Please consult your local Mitsubishi representative.	RUN: Off ERR.:Flashing CPU Status:Stop	LCPU
1712	**[UNIT BUS ERROR]** The FROM/TO instructions cannot be executed because of the error in the bus connecting with the special function module. (If an error occurs, the program error location is stored in the individual information.) **■Collateral information** • Common information: Module No. (Slot No.) • Individual information: Program error location **■Diagnostic timing** • During execution of FROM/TO instruction set	Reset the CPU module and run it again. If the same error code is displayed again, the cause is a hardware failure of the LA1S extension base unit. Please consult your local Mitsubishi representative.	RUN: Off ERR.:Flashing CPU Status:Stop	LCPU
1720	**[END COVER ERR.]** A failure was detected on the END cover. **■Collateral information** • Common information: Module No. (Block No.) • Individual information: - **■Diagnostic timing** • At power-on/At reset/When an END instruction executed	• Securely connect the connector part of an extension cable to the module. (Insert the connector until it clicks.) • Replace the END cover. • Reset the CPU module and run it again. If the same error code is displayed again, the cause is a hardware failure of the CPU module, I/O module, intelligent function module, END cover, branch module, or extension module. Please consult your local Mitsubishi representative.	RUN: Off ERR.:Flashing CPU Status:Stop	LCPU
1730	**[SYSTEM RST ERR.]** • An extension cable is not securely connected. • An error was detected in the system bus. **■Collateral information** • Common information: Module No. (Block No.) • Individual information: - **■Diagnostic timing** • At power-on/At reset	• Securely connect the connector part of an extension cable to the module. (Insert the connector until it clicks.) • Replace the END cover. • Reset the CPU module and run it again. If the same error code is displayed again, the cause is a hardware failure of the CPU module, I/O module, intelligent function module, END cover, branch module, or extension module. Please consult your local Mitsubishi representative.	RUN: Off ERR.:Flashing CPU Status:Stop	LCPU
1740	**[BRANCH UNIT ERR.]** An error was detected in the branch module. **■Collateral information** • Common information: Module No. (Slot No.) • Individual information: - **■Diagnostic timing** • Always	• Replace the branch module. • Reset the CPU module and run it again. If the same error code is displayed again, the cause is a hardware failure of the CPU module, I/O module, intelligent function module, END cover, branch module, or extension module. Please consult your local Mitsubishi representative.	RUN: Off ERR.:Flashing CPU Status:Stop	LCPU

Error code	Error and cause	Corrective action	LED status, CPU status	Corresponding CPU
1750	**[EXTEND UNIT ERR.]** An error was detected in the extension module. **■Collateral information** • Common information: Module No. (Block No.) • Individual information: - **■Diagnostic timing** • At power-on/At reset	• Replace the extension module. • Reset the CPU module and run it again. If the same error code is displayed again, the cause is a hardware failure of the CPU module, I/O module, intelligent function module, END cover, branch module, or extension module. Please consult your local Mitsubishi representative.	RUN: Off ERR.:Flashing CPU Status:Stop	LCPU
1760	**[BASE UNIT ERR.]** An error was detected in the LA1S extension base unit. **■Collateral information** • Common information: Module No. (Block No.) • Individual information: - **■Diagnostic timing** • Always	Reset the CPU module and run it again. If the same error code is displayed again, the cause is a hardware failure of the LA1S extension base unit. Please consult your local Mitsubishi representative.	RUN: Off ERR.:Flashing CPU Status:Stop	LCPU

*1 The operating status of the CPU module after an error has occurred can be set in parameter. (LED indication changes according to the status.)

*2 The BAT.ALM LED turns on or flashes if the BATTERY ERROR occurs.

*3 The operating status of each intelligent function module after an error has occurred can be set in parameter (stop or continue).

*4 Built-in Ethernet port QCPU and Built-in Ethernet port LCPU

*5 Universal model QCPU whose serial number (first five digits) is "13042" or later.

*6 This applies to the Q10UD(E)HCPU, Q13UD(E)HCPU, Q20UD(E)HCPU, Q26UD(E)HCPU, Q50UDEHCPU, and Q100UDEHCPU.

*7 Modules whose serial number (first five digits) is "08032" or later When the CPU module is powered on or reset, the error information is stored in SD6 (I/O No.).

Appendix 1.4 List of error codes (2000 to 2999)

The following table shows the error messages, the error contents and causes, and the corrective actions for the error codes (2000 to 2999).

Error code	Error and cause	Corrective action	LED status, CPU status	Corresponding CPU
2000	**[UNIT VERIFY ERR.]** In a multiple CPU system, a CPU module incompatible with the multiple CPU system is mounted. **■Collateral information** • Common information: Module No. (Slot No.) • Individual information: - **■Diagnostic timing** • When an END instruction executed	Replace the CPU module incompatible with the multiple CPU system with a CPU module compatible with the multiple CPU system.	RUN: Off/On ERR.:Flashing/On CPU Status: Stop/Continue*1	Qn(H) QnPH
	[UNIT VERIFY ERR.] The I/O module status is different from the I/O module information at power ON. • The I/O module (including the intelligent function module) is nearly disconnected or removed while the system is running. **■Collateral information** • Common information: Module No. (Slot No.) [For Remote I/O network] and Network No./Station No.*5 • Individual information: - **■Diagnostic timing** • When an END instruction executed	• Read common information of the error using the programming tool to identify the numeric value (module No.). Check the module corresponding to the value and replace it as necessary. • Monitor SD150 to SD157 using the programming tool to identify the module whose data bit is "1". Check the corresponding module and replace it as necessary.		Q00J/Q00/Q01
	[UNIT VERIFY ERR.] The I/O module status is different from the I/O module information at power ON. • The I/O module (including the intelligent function module/special function module) is nearly disconnected, removed, or mounted while the system is running. **■Collateral information** • Common information: Module No. (Slot No.) [For Remote I/O network] Network No./Station No.*5 • Individual information: - **■Diagnostic timing** • Always	• Read common information of the error using the programming tool to identify the numeric value (module No.). Check the module corresponding to the value and replace it as necessary. • Monitor SD1400 to SD1431 using the programming tool to identify the module whose data bit is "1". Check the corresponding module and replace it as necessary. • When a GOT is bus-connected to the main base unit or extension base unit, check the connection status of the extension cable and the grounding status of the GOT.		Qn(H) QnPH QnPRH QnU
2001	**[UNIT VERIFY ERR.]** During operation, a module was mounted on the slot where the empty setting of the CPU module was made. **■Collateral information** • Common information: Module No. (CPU No.) • Individual information: - **■Diagnostic timing** • Always	During operation, do not mount a module on the slot where the empty setting of the CPU module was made.	RUN: Off/On ERR.:Flashing/On CPU Status: Stop/Continue*1	Q00J/Q00/Q01 QnU
2010	**[BASE LAY ERROR]** • More than applicable number of extension base units have been used. • When a GOT was bus-connected, the CPU module was reset while the power of the GOT was OFF. **■Collateral information** • Common information: Base No. • Individual information: - **■Diagnostic timing** • At power-on/At reset	• Use the allowable number of extension base units or less. • Power on the programmable controller and GOT again.	RUN: Off ERR.:Flashing CPU Status:Stop	Q00J/Q00/Q01 QnPRH Q00UJ Q00UCPU Q01UCPU Q02UCPU

Error code	Error and cause	Corrective action	LED status, CPU status	Corresponding CPU
2011	**[BASE LAY ERROR]** The QA1S3□B, QA1S3□B-E, QA1S5□B, QA1S6□B, QA1S6ADP+A1S5□B/A1S6□B, QA6□B, or QA6ADP+A5□B/A6□B was used as the base unit. **■Collateral information** • Common information: Base No. • Individual information: - **■Diagnostic timing** • At power-on/At reset	Do not use the QA1S3□B, QA1S3□B-E, QA1S5□B, QA1S6□B, QA1S6ADP+A1S5□B/A1S6□B, QA6□B, or QA6ADP+A5□B/A6□B as the base unit.	RUN: Off ERR.:Flashing CPU Status:Stop	Q00J/Q00/Q01 QnPH QnPRH QnU
2012	**[BASE LAY ERROR]** The GOT is bus-connected to the main base unit of the redundant system. The following errors were detected in the redundant system. • The base unit other than the Q6□WRB is connected to the extension stage No.1. • The base unit is connected to any one of the extension stages No.2 to No.7, although the Q6□WRB does not exist in the extension stage No.1. • The other system CPU module is incompatible with the extension base unit. • The Q5□B, QA1S5□B, QA1S6□B, QA1S6ADP+A1S5□B/A1S6□B, QA6□B or QA6ADP+A5□B/A6□B is connected. • The number of slots of the main base unit for both systems is different. • Information of the Q6□WRB cannot be read correctly. **■Collateral information** • Common information: Base No. • Individual information: - **■Diagnostic timing** • At power-on/At reset	• Remove the bus connection cable for the GOT connected to the main base unit. • Use the Q6□WRB (fixed to the extension stage No.1). • Use the redundant CPU compatible with the extension base unit for the other system. • Do not use the Q5□B, QA1S5□B, QA1S6□B, QA1S6ADP+A1S5□B/A1S6□B, QA6□B, or QA6ADP+A5□B/A6□B as the base unit. • Use the main base unit which has the same number of slots. • The cause is a hardware failure of the Q6□WRB. Please consult your local Mitsubishi representative.	RUN: Off ERR.:Flashing CPU Status:Stop	QnPRH
2013	**[BASE LAY ERROR]** Stage number of the Q6□WRB is recognized as other than extension stage No.1 in the redundant system. **■Collateral information** • Common information: Base No. • Individual information: - **■Diagnostic timing** • At power-on/At reset	The cause is a hardware failure of the Q6□WRB. Please consult your local Mitsubishi representative.	RUN: Off ERR.:Flashing CPU Status:Stop	QnPRH
2014	**[BASE LAY ERROR]** The branch module on the block before the LA1S5□B is connected on the left of the END cover. **■Collateral information** • Common information: Module No. (Block No.) • Individual information: - **■Diagnostic timing** • At power-on/At reset	• Replace the LA1S5□B with the LA1S6□B. • Connect the branch module on the LA1S5□B on the right of the CPU module or the extension module.	RUN: Off ERR.:Flashing CPU Status:Stop	LCPU
2020	**[EXT.CABLE ERR.]** The following errors were detected in the redundant system. • At power-on/reset, the standby system has detected the error in the path between the control system and the Q6□WRB. • The standby system detected an error in the path to the Q6□WRB in the END processing. **■Collateral information** • Common information: - • Individual information: - **■Diagnostic timing** • At power-on/At reset/When an END instruction executed	Check to see if the extension cable between the main base unit and the Q6□WRB is connected correctly. If not, connect it after turning OFF the main base unit where the extension cable will be connected. If the cable is properly connected, the cause is a hardware failure of the CPU module, Q6□WRB, or extension cable. Please consult your local Mitsubishi representative.	RUN: Off ERR.:Flashing CPU Status:Stop	QnPRH

Error code	Error and cause	Corrective action	LED status, CPU status	Corresponding CPU
2030	**[NO END COVER]** • There is no END cover. • The LA1S extension base unit is used as an extension base unit. **■Collateral information** • Common information: Module No. (Block No.) • Individual information: - **■Diagnostic timing** • At power-on/At reset	• Attach an END cover. • Check that the modules are properly connected with referring to the System Monitor window. • Do not use the LA1S extension base unit. • Reset the CPU module and run it again. If the same error code is displayed again, the cause is a hardware failure of the CPU module, I/O module, intelligent function module, END cover, branch module, or extension module. Please consult your local Mitsubishi representative.	RUN: Off ERR.:Flashing CPU Status:Stop	LCPU
2031	**[NO END COVER]** There is no END cover. **■Collateral information** • Common information: Module No. (Block No.) • Individual information: - **■Diagnostic timing** • When an END instruction executed	• Attach an END cover. • Check that the modules are properly connected with referring to the System Monitor window. • Do not use the LA1S extension base unit. • Reset the CPU module and run it again. If the same error code is displayed again, the cause is a hardware failure of the CPU module, I/O module, intelligent function module, END cover, branch module, or extension module. Please consult your local Mitsubishi representative.	RUN: Off ERR.:Flashing CPU Status:Stop	LCPU
2040	**[UNIT BAD CONNECT]** (1) The I/O module status is different from the I/O module information at power ON. (2) The I/O module (including the intelligent function module) is nearly disconnected or removed while the system is running. (3) An extension cable is not securely connected. (4) Runaway or failure of the CPU module (built-in I/O, built-in CC-Link) • Malfunction due to noise or other causes • Hardware failure **■Collateral information** • Common information: Module No. (Slot No.) • Individual information: - **■Diagnostic timing** • Always	• Read common information of the error using the programming tool to identify the numeric value (module No.). Check the module corresponding to the value and replace it as necessary. • Monitor SD1400 to SD1431 using the programming tool to identify the module whose data bit is "1". Check the corresponding module and replace it as necessary. • Securely connect the connector part of an extension cable to the module. (Insert the connector until it clicks.) • Take noise reduction measures. • Reset the CPU module and run it again. If the same error code is displayed again, the cause is a hardware failure of the CPU module, I/O module, intelligent function module, END cover, branch module, or extension module. Please consult your local Mitsubishi representative.	RUN: Off ERR.:Flashing CPU Status:Stop	LCPU
2050	**[EXT. CABLE ERR.]** An extension cable is disconnected. **■Collateral information** • Common information: Module No. (Block No.) • Individual information: - **■Diagnostic timing** • When an END instruction executed	• Connect the extension cable. • Reset the CPU module and run it again. If the same error code is displayed again, the cause is a hardware failure of the CPU module, I/O module, intelligent function module, END cover, branch module, or extension module. Please consult your local Mitsubishi representative.	RUN: Off ERR.:Flashing CPU Status:Stop	LCPU

Error code	Error and cause	Corrective action	LED status, CPU status	Corresponding CPU
2100	**[SP.UNIT LAY ERR.]** The slot where the QI60 is mounted was assigned as other than an intelligent function module or interrupt module in the I/O assignment tab of "PLC Parameter". **■Collateral information** • Common information: Module No. (Slot No.) • Individual information: - **■Diagnostic timing** • At power-on/At reset	Make setting again to match the PLC parameter I/O assignment with the actual loading status.	RUN: Off ERR.:Flashing CPU Status:Stop	Qn(H) QnPH QnPRH
	[SP.UNIT LAY ERR.] • In the I/O Assignment tab of "PLC Parameter", "Intelligent" (intelligent function module) is set for the slot where an I/O module is mounted, and vice versa. • In the I/O Assignment tab of "PLC Parameter", a module other than a CPU module or empty is set for the slot where a CPU module is mounted, and vice versa. • In the I/O Assignment tab of "PLC Parameter", switch settings are configured for the module that does not support the setting. • In the I/O Assignment tab of "PLC Parameter", the number of points assigned to the intelligent function module is less than that of the mounted module. **■Collateral information** • Common information: Module No. (Slot No.) • Individual information: - **■Diagnostic timing** • At power-on/At reset	• Set the I/O assignment again so that the setting matches with the mounting status of the intelligent function module or the CPU module. • Delete the switch setting in the I/O assignment setting tab of "PLC parameter".		Qn(H) QnPH QnPRH QnU
	[SP.UNIT LAY ERR.] • In the I/O Assignment tab of "PLC Parameter", "Intelligent" (intelligent function module) is set for the slot where an I/O module is mounted, and vice versa. • In the I/O Assignment tab of "PLC Parameter", a module other than a CPU module or empty is set for the slot where a CPU module is mounted, and vice versa. • In the I/O Assignment tab of "PLC Parameter", the number of points assigned to the intelligent function module is less than that of the mounted module. **■Collateral information** • Common information: Module No. (Slot No.) • Individual information: - **■Diagnostic timing** • At power-on/At reset	Set the I/O assignment again so that the setting matches with the mounting status of the intelligent function module or the CPU module.		Q00J/Q00/Q01

Error code	Error and cause	Corrective action	LED status, CPU status	Corresponding CPU
2100	**[SP.UNIT LAY ERR.]** • In the I/O Assignment tab of "PLC Parameter", "Intelligent" (intelligent function module) or a branch module is set for the position where an I/O module is connected. • In the I/O Assignment tab of "PLC Parameter", "Input" (input module), "Output" (output module), or a branch module is set for the position where an intelligent function module is connected. • In the I/O Assignment tab of "PLC Parameter", "Input" (input module), "Output" (output module), or "Intelligent" (intelligent function module) is set for the position where a branch module is connected. • In the I/O Assignment tab of "PLC Parameter", switch settings are configured for the module that does not support the setting. • In the I/O Assignment tab of "PLC Parameter", the number of points assigned to the intelligent function module is less than that of the mounted module. **■Collateral information** • Common information: Module No. (Slot No.) • Individual information: - **■Diagnostic timing** • At power-on/At reset	• Set the I/O assignment again so that the setting matches with the mounting status of the intelligent function module, CPU module, or branch module. • Delete the switch setting in the I/O assignment setting tab of "PLC parameter". • Reset the CPU module and run it again. If the same error code is displayed again, the cause is a hardware failure of the CPU module, I/O module, intelligent function module, END cover, branch module, or extension module. Please consult your local Mitsubishi representative.	RUN: Off ERR.:Flashing CPU Status:Stop	LCPU
	[SP.UNIT LAY ERR.] In the PLC parameter setting, setting content for the adapter type is different from the ones for the mounted adapter. Or no adapter has been set. **■Collateral information** • Common information: $FFFF_H$ (fixed) • Individual information: - **■Diagnostic timing** • At power-on/At reset	• Make setting again to match the PLC parameter adapter type setting with the mounted adapter. • Reset the CPU module and run it again. If the same error code is displayed again, the cause is a hardware failure of the CPU module, RS-232 adapter, and RS-422/485 adapter. Please consult your local Mitsubishi representative.		LCPU
2101	**[SP.UNIT LAY ERR.]** 13 or more A-series special function modules (except for the A1SI61/AI61(-S1)) that can initiate an interrupt to the CPU module have been installed. **■Collateral information** • Common information: Module No. (Slot No.) • Individual information: - **■Diagnostic timing** • At power-on/At reset	Reduce the number of A series special function modules (except the A1SI61/AI61(-S1)) that can start interrupt programs to the CPU module to 12 or less.	RUN: Off ERR.:Flashing CPU Status:Stop	Qn(H)
2102	**[SP.UNIT LAY ERR.]** Total of 7 or more MELSECNET, MELSECNET/B local station data link module (A1SJ71AP23Q, A1SJ71AR23Q, A1SJ71AT23BQ), A/QnA intelligent communication module (A1SD51, AD51(H)(-S3)), A/QnA JEMANET(JPCN-1) master module (A1SJ71J92-S3, AJ71J92-S3), A/QnA external failure diagnostics module (AD51FD-S3), and A/QnA paging interface module (A1SD21-S1) have been installed. **■Collateral information** • Common information: Module No. (Slot No.) • Individual information: - **■Diagnostic timing** • At power-on/At reset	Reduce the total number of MELSECNET, MELSECNET/B local station data link modules, A/QnA intelligent communication modules, A/QnA JEMANET(JPCN-1) master modules, A/QnA external failure diagnostics modules, and A/QnA paging interface modules in the system to six or less.	RUN: Off ERR.:Flashing CPU Status:Stop	Qn(H) QnU (except the QnUDPV) LCPU

Error code	Error and cause	Corrective action	LED status, CPU status	Corresponding CPU
2103	**[SP.UNIT LAY ERR.]** • Two or more QI60/A1SI61/AI61(-S1) modules are mounted in a single CPU system. • Two or more QI60/A1SI61/AI61(-S1) modules are set to the same control CPU in a multiple CPU system. • Two or more A1SI61/AI61(-S1) modules are loaded in a multiple CPU system. **■Collateral information** • Common information: Module No. (Slot No.) • Individual information: - **■Diagnostic timing** • At power-on/At reset	• Mount only one QI60/A1SI61/AI61(-S1) module in the single CPU system. • Mount only one A1SI61/AI61(-S1) module in the single CPU system, and set an interrupt pointer to the QI60. • Control only one QI60/A1SI61/AI61(-S1) module by the control CPU module in the multiple CPU system. • Mount only one A1SI61/AI61(-S1) module in the multiple CPU system.	RUN: Off ERR.:Flashing CPU Status:Stop	Qn(H) QnPH QnU[*4]
	[SP.UNIT LAY ERR.] Two or more QI60, A1SI61 interrupt modules have been mounted. **■Collateral information** • Common information: Module No. (Slot No.) • Individual information: - **■Diagnostic timing** • At power-on/At reset	Reduce the number of QI60 and A1SI61 modules to one each.		Qn(H) QnPRH
	[SP.UNIT LAY ERR.] Two or more QI60 modules are mounted. **■Collateral information** • Common information: Module No. (Slot No.) • Individual information: - **■Diagnostic timing** • At power-on/At reset	Mount only one QI60 module.		Q00J/Q00/Q01
	[SP.UNIT LAY ERR.] Two or more QI60 modules where interrupt pointer setting has not been made are mounted. **■Collateral information** • Common information: Module No. (Slot No.) • Individual information: - **■Diagnostic timing** • At power-on/At reset	• Mount only one QI60 module. • Set an interrupt pointer to the second QI60 module and later.		Q00J/Q00/Q01 QnU
	[SP.UNIT LAY ERR.] • An interrupt pointer set in built-in I/O function setting parameter and the interrupt pointer for the A1SI61 are overlapping. • Two or more A1SI61 modules are mounted. **■Collateral information** • Common information: Module No. (Slot No.) • Individual information: - **■Diagnostic timing** • At power-on/At reset	• Set interrupt pointers so that they do not overlap. • Mount only one A1SI61 module.		LCPU

Error code	Error and cause	Corrective action	LED status, CPU status	Corresponding CPU
2106	**[SP.UNIT LAY ERR.]** • Two or more MELSECNET/H and CC-Link IE Controller Network modules in total are mounted in the entire system. • Two or more Ethernet modules are mounted in the entire system. **■Collateral information** • Common information: Module No. (Slot No.) • Individual information: - **■Diagnostic timing** • At power-on/At reset	• Mount either MELSECNET/H module or CC-Link IE Controller Network module in the entire system. • Mount only one Ethernet module in the entire system.	RUN: Off ERR.:Flashing CPU Status:Stop	Q00UJCPU
	[SP.UNIT LAY ERR.] • Two or more MELSECNET/H and CC-Link IE Controller Network modules in total are mounted in the entire system. • Two or more Ethernet modules are mounted in the entire system. **■Collateral information** • Common information: Module No. (Slot No.) • Individual information: - **■Diagnostic timing** • At power-on/At reset	• Mount either MELSECNET/H module or CC-Link IE Controller Network module in the entire system. • Mount only one Ethernet module in the entire system.		Q00UCPU Q01UCPU
	[SP.UNIT LAY ERR.] • Three or more MELSECNET/H and CC-Link IE Controller Network modules in total are mounted in the entire system. • Three or more Ethernet interface modules are mounted in the entire system. **■Collateral information** • Common information: Module No. (Slot No.) • Individual information: - **■Diagnostic timing** • At power-on/At reset	• Reduce the number of MELSECNET/H and CCLink IE Controller Network modules to two or less in the entire system. • Reduce the number of Ethernet modules to two or less in the entire system.		Q02UCPU
	[SP.UNIT LAY ERR.] • Five or more MELSECNET/H and CC-Link IE Controller Network modules in total are mounted in the entire system. • Five or more Ethernet interface modules are mounted in the entire system. **■Collateral information** • Common information: Module No. (Slot No.) • Individual information: - **■Diagnostic timing** • At power-on/At reset	• Reduce the number of MELSECNET/H and CCLink IE Controller Network modules to four or less in the entire system. • Reduce the number of Ethernet modules to four or less in the entire system.		QnU
	[SP.UNIT LAY ERR.] • Three or more CC-Link IE Controller Network modules are mounted in the entire system. • Five or more MELSECNET/H and CC-Link IE Controller Network modules in total are mounted in the entire system. **■Collateral information** • Common information: Module No. (Slot No.) • Individual information: - **■Diagnostic timing** • At power-on/At reset	• Reduce the number of CC-Link IE Controller Network modules to two or less in the entire system. • Reduce the number of MELSECNET/H and CCLink IE Controller Network modules to four or less in the entire system.		Qn(H) QnPH QnPRH

Error code	Error and cause	Corrective action	LED status, CPU status	Corresponding CPU
2106	**[SP.UNIT LAY ERR.]** • Five or more MELSECNET/H modules have been installed. • Five or more Ethernet interface modules have been installed. **■Collateral information** • Common information: Module No. (Slot No.) • Individual information: - **■Diagnostic timing** • At power-on/At reset	• Reduce the number of MELSECNET/H modules to four or less. • Reduce the number of Ethernet modules to four or less.	RUN: Off ERR.:Flashing CPU Status:Stop	Qn(H) QnPH QnPRH QnUDPV
	[SP.UNIT LAY ERR.] • Two or more MELSECNET/H modules were installed. • Two or more Ethernet modules were installed. • Three or more CC-Link modules were installed. **■Collateral information** • Common information: Module No. (Slot No.) • Individual information: - **■Diagnostic timing** • At power-on/At reset	• Mount only one MELSECNET/H module. • Mount only one Ethernet module. • Reduce the number of CC-Link modules to two or less.		Q00J/Q00/Q01
	[SP.UNIT LAY ERR.] The same network number or same station number is duplicated in the MELSECNET/H network system. **■Collateral information** • Common information: Module No. (Slot No.) • Individual information: - **■Diagnostic timing** • At power-on/At reset	Check the network number and station number.		Q00J/Q00/Q01 Qn(H) QnPH QnPRH
	[SP.UNIT LAY ERR.] Two or more Ethernet modules were installed. **■Collateral information** • Common information: Module No. (Slot No.) • Individual information: - **■Diagnostic timing** • At power-on/At reset	Mount only one Ethernet module.		L02SCPU L02SCPU-P L02CPU L02CPU-P
	[SP.UNIT LAY ERR.] Three or more Ethernet modules were installed. **■Collateral information** • Common information: Module No. (Slot No.) • Individual information: - **■Diagnostic timing** • At power-on/At reset	Reduce the number of Ethernet modules to two or less.		L06CPU L06CPU-P L26CPU L26CPU-P L26CPU-BT L26CPU-PBT
2107	**[SP.UNIT LAY ERR.]** The start X/Y configured in the I/O Assignment tab of "PLC Parameter" is overlapped with that for another module. **■Collateral information** • Common information: Module No. (Slot No.) • Individual information: - **■Diagnostic timing** • At power-on/At reset	Configure the I/O assignment setting of the PLC parameter again so that it is consistent with the actual status of the intelligent function modules, special function modules, and I/O modules.	RUN: Off ERR.:Flashing CPU Status:Stop	QCPU
	[SP.UNIT LAY ERR.] The start X/Y configured in the I/O Assignment tab of "PLC Parameter" is overlapped with that for another module. **■Collateral information** • Common information: Module No. (Slot No.) • Individual information: - **■Diagnostic timing** • At power-on/At reset	• Configure the start X/Y again in the I/O Assignment tab of "PLC Parameter" according to the intelligent function module and I/O modules connected. • Reset the CPU module and run it again. If the same error code is displayed again, the cause is a hardware failure of the CPU module, I/O module, intelligent function module, END cover, branch module, or extension module. Please consult your local Mitsubishi representative.		LCPU

Error code	Error and cause	Corrective action	LED status, CPU status	Corresponding CPU
2108	**[SP.UNIT LAY ERR.]** • The A1SJ71LP21, A1SJ71LR21, A1SJ71BR11, A1SJ71AP21, A1SJ71AR21, or A1SJ71AT21B network module dedicated for the A2USCPU is used. • The A1SJ71QLP21, A1SJ71QLP21S, A1SJ71QLR21, or A1SJ71QBR11 network module dedicated for the Q2ASCPU is used. • The AJ71LP21, AJ71LP21G, AJ71BR11, AJ71AP21, AJ71AR21, or AJ71AT21B network module dedicated for the A2UCPU is used. • The AJ71QLP21, AJ71QLP21S, AJ71QLP21G or AJ71QBR11 network module dedicated for the Q2ACPU is used. **■Collateral information** • Common information: Module No. (Slot No.) • Individual information: - **■Diagnostic timing** • At power-on/At reset	Replace the network module for the A2USCPU, Q2ASCPU, A2UCPU, or Q2ACPU with the MELSECNET/H module.	RUN: Off ERR.:Flashing CPU Status:Stop	Qn(H) QnU (except the QnUDPV)
	[SP.UNIT LAY ERR.] • The A1SJ71LP21, A1SJ71LR21, A1SJ71BR11, A1SJ71AP21, A1SJ71AR21, or A1SJ71AT21B network module dedicated for the A2USCPU is used. • The A1SJ71QLP21, A1SJ71QLP21S, A1SJ71QLR21, or A1SJ71QBR11 network module dedicated for the Q2ASCPU is used. **■Collateral information** • Common information: Module No. (Slot No.) • Individual information: - **■Diagnostic timing** • At power-on/At reset	Disconnect the corresponding module. Use the CC-Link IE Field Network master/local module.		LCPU
2110	**[SP. UNIT ERROR]** • The location designated by the FROM/TO instruction set is not the intelligent function module/special function module. • The module that does not include buffer memory has been specified by the FROM/TO instruction. • The intelligent function module/special function module, Network module being accessed is faulty. • Station not loaded was specified using the instruction whose target was the CPU share memory. **■Collateral information** • Common information: Module No. (Slot No.) • Individual information: Program error location **■Diagnostic timing** • When instruction executed	• Read the individual information of the error using the programming tool to identify the numeric value (program error location). Correct the FROM/TO instruction corresponding to the value as necessary. • The cause is a hardware fault of the intelligent function module/special function module in the access destination. Please consult your local Mitsubishi representative.	RUN: Off/On ERR.:Flashing/On CPU Status: Stop/Continue[*1]	Q00J/Q00/Q01 Qn(H) QnPH QnPRH QnU
	[SP. UNIT ERROR] • A module other than intelligent function modules is specified with the FROM/TO instruction. • The module specified with the FROM/TO instruction does not have the buffer memory. • The intelligent function module being accessed is faulty. **■Collateral information** • Common information: Module No. (Slot No.) • Individual information: Program error location **■Diagnostic timing** • When instruction executed	• Read the individual information of the error using the programming tool to identify the numeric value (program error location). Correct the FROM/TO instruction corresponding to the value as necessary. • Reset the CPU module and run it again. If the same error code is displayed again, the cause is a hardware failure of the CPU module, I/O module, intelligent function module, END cover, branch module, or extension module. Please consult your local Mitsubishi representative.		LCPU

Error code	Error and cause	Corrective action	LED status, CPU status	Corresponding CPU
2111	**[SP. UNIT ERROR]** • The location designated by a link direct device (J□\□) is not a network module. • The I/O module (including the intelligent function module/special function module) is nearly disconnected, removed, or mounted while the system is running. **■Collateral information** • Common information: Module No. (Slot No.) • Individual information: Program error location **■Diagnostic timing** • When instruction executed	• Read the individual information of the error using the programming tool to identify the numeric value (program error location). Correct the FROM/TO instruction corresponding to the value as necessary. • The cause is a hardware fault of the intelligent function module/special function module in the access destination. Please consult your local Mitsubishi representative.	RUN: Off/On ERR.:Flashing/On CPU Status: Stop/Continue*1	QCPU
	[SP. UNIT ERROR] The location designated by a link direct device (J□\□) is not a network module. **■Collateral information** • Common information: Module No. (Slot No.) • Individual information: Program error location **■Diagnostic timing** • When instruction executed/STOP → RUN	• Read the individual information of the error using the programming tool to identify the numeric value (program error location). Correct the FROM/TO instruction corresponding to the value as necessary. • Reset the CPU module and run it again. If the same error code is displayed again, the cause is a hardware failure of the CPU module, I/O module, intelligent function module, END cover, branch module, or extension module. Please consult your local Mitsubishi representative.		LCPU
2112	**[SP. UNIT ERROR]** • The module other than intelligent function module/special function module is specified by the intelligent function module/special function module dedicated instruction. Or, it is not the corresponding intelligent function module/special function module. • There is no network No. specified by the network dedicated instruction. Or the relay target network does not exit. **■Collateral information** • Common information: Module No. (Slot No.) • Individual information: Program error location **■Diagnostic timing** • When instruction executed	Read the individual information of the error using the programming tool to identify the numeric value (program error location). Check the intelligent function module/special function module dedicated instruction (instruction for a network) corresponding to the value and correct it as necessary.	RUN: Off/On ERR.:Flashing/On CPU Status: Stop/Continue*1	QCPU
	[SP. UNIT ERROR] • The module other than intelligent function module was specified with an intelligent function module dedicated instruction. Or there is no relevant intelligent function module. • There is no network No. specified by the network dedicated instruction. Or the relay target network does not exit. **■Collateral information** • Common information: Module No. (Slot No.) • Individual information: Program error location **■Diagnostic timing** • When instruction executed/STOP → RUN	• Read the individual information of the error using the programming tool to identify the numeric value (program error location). Check the intelligent function module dedicated instruction corresponding to the value and correct it as necessary. • Reset the CPU module and run it again. If the same error code is displayed again, the cause is a hardware failure of the CPU module, I/O module, intelligent function module, END cover, branch module, or extension module. Please consult your local Mitsubishi representative.		LCPU
2113	**[SP. UNIT ERROR]** The module other than network module is specified by the network dedicated instruction. **■Collateral information** • Common information: $FFFF_H$ (fixed) • Individual information: Program error location **■Diagnostic timing** • When instruction executed/STOP → RUN	Read the individual information of the error using the programming tool to identify the numeric value (program error location). Check the intelligent function module/special function module dedicated instruction (instruction for a network) corresponding to the value and correct it as necessary.	RUN: Off/On ERR.:Flashing/On CPU Status: Stop/Continue*1	Qn(H) QnPH

Error code	Error and cause	Corrective action	LED status, CPU status	Corresponding CPU
2114	**[SP. UNIT ERROR]** An instruction, which on execution specifies other stations, has been used for specifying the host CPU. (An instruction that does not allow the host CPU to be specified). **■Collateral information** • Common information: Module No. (Slot No.) • Individual information: Program error location **■Diagnostic timing** • When instruction executed	Read individual information of the error using the programming tool to identify the numeric value (program error location). Check the error step corresponding to the value and correct it as necessary.	RUN: Off/On ERR.:Flashing/On CPU Status: Stop/Continue	Q00J/Q00/Q01 Qn(H) QnPH QnU
2115	**[SP. UNIT ERROR]** An instruction, which on execution specifies the host CPU, has been used for specifying other CPUs. (An instruction that does not allow other stations to be specified). **■Collateral information** • Common information: Module No. (Slot No.) • Individual information: Program error location **■Diagnostic timing** • When instruction executed/STOP → RUN	Read individual information of the error using the programming tool to identify the numeric value (program error location). Check the error step corresponding to the value and correct it as necessary.	RUN: Off/On ERR.:Flashing/On CPU Status: Stop/Continue	Q00J/Q00/Q01 Qn(H) QnPH
2116	**[SP. UNIT ERROR]** • An instruction that does not allow the under the control of another CPU to be specified is being used for a similar task. • Instruction was executed for the A or QnA module under control of another CPU. **■Collateral information** • Common information: Module No. (Slot No.) • Individual information: Program error location **■Diagnostic timing** • When instruction executed	Read individual information of the error using the programming tool to identify the numeric value (program error location). Check the error step corresponding to the value and correct it as necessary.	RUN: Off/On ERR.:Flashing/On CPU Status: Stop/Continue	Q00J/Q00/Q01 Qn(H) QnPH QnU
2117	**[SP. UNIT ERROR]** A CPU module that cannot be specified in the instruction dedicated to the multiple CPU system was specified. **■Collateral information** • Common information: Module No. (Slot No.) • Individual information: Program error location **■Diagnostic timing** • When instruction executed	Read individual information of the error using the programming tool to identify the numeric value (program error location). Check the error step corresponding to the value and correct it as necessary.	RUN: Off/On ERR.:Flashing/On CPU Status: Stop/Continue	Q00J/Q00/Q01 Qn(H) QnPH QnU
2118	**[SP. UNIT ERROR]** When the online module change setting is set to be "enabled" in the PLC parameter in a multiple CPU system, intelligent function module controlled by other CPU using the FROM instruction/intelligent function module device (U□\G□) is specified. **■Collateral information** • Common information: Module No. (Slot No.) • Individual information: Program error location **■Diagnostic timing** • When instruction executed	• When performing the online module change in a multiple CPU system, correct the program so that access will not be made to the intelligent function module controlled by the other CPU. • When accessing the intelligent function module controlled by the other CPU in a multiple CPU system, set the online module change setting to be "disabled" by parameter.	RUN: Off/On ERR.:Flashing/On CPU Status: Stop/Continue	Qn(H) QnPH QnU

Error code	Error and cause	Corrective action	LED status, CPU status	Corresponding CPU
2120	**[SP.UNIT LAY ERR.]** • The Q5□B and Q6□B, or the QA1S5□B, QA1S6□B, QA1S6ADP+A1S5□B/A1S6□B, QA6□B and QA6ADP+A5□B/A6□B are connected in the wrong order, or the setting of the extension level setting connector is incorrect. • I/O numbers for Q series modules and A series modules are assigned in the wrong order. **■Collateral information** • Common information: - • Individual information: - **■Diagnostic timing** • At power-on/At reset	• Check and correct the connection order of the base units and the setting of the extension level setting connector. • Assign I/O numbers in an order of: Q series modules → A series modules or A series modules → Q series modules.	RUN: Off ERR.:Flashing CPU Status:Stop	Q00J/Q00/Q01 Qn(H) QnPH QnU
	[SP.UNIT LAY ERR.] • The LA1S extension base unit is connected in the wrong position, or the setting of the extension level setting connector is incorrect. • I/O numbers for L series modules and AnS/QnAS series modules are assigned in the wrong order. **■Collateral information** • Common information: - • Individual information: - **■Diagnostic timing** • At power-on/At reset	• Check and correct the connecting position of the LA1S extension base unit and the setting of the extension level setting connector. • Assign I/O numbers in an order of: L series modules → AnS/QnAS series modules or AnS/QnAS series modules → L series modules.		LCPU
2121	**[SP.UNIT LAY ERR.]** The CPU module is installed to other than the CPU slot and slots 0 to 2. **■Collateral information** • Common information: - • Individual information: - **■Diagnostic timing** • At power-on/At reset	Check the loading position of the CPU module and reinstall it at the correct slot.	RUN: Off ERR.:Flashing CPU Status:Stop	Qn(H) QnPH
2122	**[SP.UNIT LAY ERR.]** The QA1S3□B and QA1S3□B-E are used as the main base unit. **■Collateral information** • Common information: - • Individual information: - **■Diagnostic timing** • At power-on/At reset	Replace the main base unit with a usable one.	RUN: Off ERR.:Flashing CPU Status:Stop	Qn(H) QnPH QnPRH QnU

Error code	Error and cause	Corrective action	LED status, CPU status	Corresponding CPU
2124	**[SP.UNIT LAY ERR.]** • A module is mounted on the 65th slot or later slot. • A module is mounted on the slot whose number is greater than the number of slots specified at [Slots] in [Standard setting] of the base setting. • A module is mounted on the slot whose number of I/O points exceeds 4096 points. • A module is mounted on the slot whose number of I/O points strides 4096 points. **■Collateral information** • Common information: - • Individual information: - **■Diagnostic timing** • At power-on/At reset	• Remove the module mounted on the 65th slot or later slot. • Remove the module mounted on the slot whose number is greater than the number of slots specified at [Slots] in [Standard setting] of the base setting. • Remove the module mounted on the slot whose number of I/O points exceeds 4096 points. • Replace the last module with the one whose number of occupied points is within 4096.	RUN: Off ERR.:Flashing CPU Status:Stop	Qn(H) QnPH QnPRH QnU
	[SP.UNIT LAY ERR.] • A module is mounted on after the 25th slot (on after the 17th slot for the Q00UJ). • A module is mounted on the slot whose number is later than the one set in the "Base setting" on the I/O assignment tab of PLC parameter in GX Developer. • A module is mounted on the slot for which I/O points greater than 1024 (greater than 256 for the Q00UJ) is assigned. • A module is mounted on the slot for which I/O points is assigned from less than 1024 to greater than 1024 (from less than 256 to greater than 256 for the Q00UJ). **■Collateral information** • Common information: - • Individual information: - **■Diagnostic timing** • At power-on/At reset	• Remove the module mounted on after the 25th (on after the 17th slot for the Q00UJ). • Remove the module mounted on the slot whose number is later than the one set in the "Base setting" on the I/O assignment tab of PLC parameter in GX Developer. • Remove the module mounted on the slot for which I/O points greater than 1024 (greater than 256 for the Q00UJ) is assigned. • Replace the last module with the one whose number of occupied points is within 1024 (within 256 for the Q00UJ).		Q00UJ/Q00U/Q01U
	[SP.UNIT LAY ERR.] • A module is mounted on the 37th slot or later slot. • A module is mounted on the slot whose number is greater than the number of slots specified at [Slots] in [Standard setting] of the base setting. • A module is mounted on the slot whose number of I/O points exceeds 2048 points. • A module is mounted on the slot whose number of I/O points strides 2048 points. **■Collateral information** • Common information: - • Individual information: - **■Diagnostic timing** • At power-on/At reset	• Remove the module mounted on the 37th slot or later slot. • Remove the module mounted on the slot whose number is greater than the number of slots specified at [Slots] in [Standard setting] of the base setting. • Remove the module mounted on the slot whose number of I/O points exceeds 2048 points. • Replace the last module with the one whose number of occupied points is within 2048.		Q02UCPU

Error code	Error and cause	Corrective action	LED status, CPU status	Corresponding CPU
2124	**[SP.UNIT LAY ERR.]** • A module is mounted on the 25th slot or later slot. (The 17th slot or later slot for the Q00J.) • A module is mounted on the slot whose number is greater than the number of slots specified at [Slots] in [Standard setting] of the base setting. • A module is mounted on the slot whose number of I/O points exceeds 1024 points. (256 points for the Q00J.) • A module is mounted on the slot whose number of I/O points strides 1024 points. (256 points for the Q00J.) **■Collateral information** • Common information: - • Individual information: - **■Diagnostic timing** • At power-on/At reset	• Remove the module mounted on the 25th slot or later slot. (The 17th slot or later slot for the Q00J.) • Remove the module mounted on the slot whose number is greater than the number of slots specified at [Slots] in [Standard setting] of the base setting. • Remove the module mounted on the slot whose number of I/O points exceeds 1024 points (greater than or equal to 256 points for the Q00J). • Replace the last module with the one whose number of occupied points is within 1024 (within 256 for the Q00J).	RUN: Off ERR.:Flashing CPU Status:Stop	Q00J/Q00/Q01
	[SP.UNIT LAY ERR.] • The number of connectable modules has exceeded 10. • A module is installed exceeding the I/O points of 4096. • A module is installed crossing the I/O points of 4096. **■Collateral information** • Common information: - • Individual information: - **■Diagnostic timing** • At power-on/At reset	• Reduce the number of connectable modules to 10 or less. • Remove the module whose number of points exceeds 4096 points. • Replace the last module with the one whose number of occupied points is within 4096. • Reset the CPU module and run it again. If the same error code is displayed again, the cause is a hardware failure of the CPU module, I/O module, intelligent function module, END cover, branch module, or extension module. Please consult your local Mitsubishi representative.		L26CPU-BT L26CPU-PBT
	[SP.UNIT LAY ERR.] • The number of connectable modules has exceeded 40. • A module is installed exceeding the I/O points of 4096. • A module is installed crossing the I/O points of 4096. **■Collateral information** • Common information: - • Individual information: - **■Diagnostic timing** • At power-on/At reset	• Reduce the number of connectable modules to 40 or less. • Remove the module whose number of points exceeds 4096 points. • Replace the last module with the one whose number of occupied points is within 4096. • Reset the CPU module and run it again. If the same error code is displayed again, the cause is a hardware failure of the CPU module, I/O module, intelligent function module, END cover, branch module, or extension module. Please consult your local Mitsubishi representative.		L06CPU L06CPU-P L26CPU L26CPU-P L26CPU-BT L26CPU-PBT
	[SP.UNIT LAY ERR.] • The number of connectable modules has exceeded 10. • A module is installed exceeding the I/O points of 1024. • A module is installed crossing the I/O points of 1024. **■Collateral information** • Common information: - • Individual information: - **■Diagnostic timing** • At power-on/At reset	• Reduce the number of connectable modules to 10 or less. • Remove the module whose number of points exceeds 1024 points. • Replace the last module with the one whose number of occupied points is within 1024. • Reset the CPU module and run it again. If the same error code is displayed again, the cause is a hardware failure of the CPU module, I/O module, intelligent function module, END cover, branch module, or extension module. Please consult your local Mitsubishi representative.		L02CPU L02CPU-P

Error code	Error and cause	Corrective action	LED status, CPU status	Corresponding CPU
2124	**[SP.UNIT LAY ERR.]** • The number of connectable modules has exceeded 30. • A module is installed exceeding the I/O points of 1024. • A module is installed crossing the I/O points of 1024. **■Collateral information** • Common information: - • Individual information: - **■Diagnostic timing** • At power-on/At reset	• Reduce the number of connectable modules to 30 or less. • Remove the module whose number of points exceeds 1024 points. • Replace the last module with the one whose number of occupied points is within 1024. • Reset the CPU module and run it again. If the same error code is displayed again, the cause is a hardware failure of the CPU module, I/O module, intelligent function module, END cover, branch module, or extension module. Please consult your local Mitsubishi representative.	RUN: Off ERR.:Flashing CPU Status:Stop	L02SCPU L02SCPU-P L02CPU L02CPU-P
2125	**[SP.UNIT LAY ERR.]** • A module which the QCPU cannot recognize has been installed. • There was no response from the intelligent function module/special function module. **■Collateral information** • Common information: Module No. (Slot No.) • Individual information: - **■Diagnostic timing** • At power-on/At reset	• Install a usable module. • The intelligent function module/special function module is experiencing a hardware fault. Please consult your local Mitsubishi representative.	RUN: Off ERR.:Flashing CPU Status:Stop	QCPU
	[SP.UNIT LAY ERR.] • A module which the LCPU cannot recognize has been connected. • There was no response from the intelligent function module. **■Collateral information** • Common information: Module No. (Slot No.) • Individual information: - **■Diagnostic timing** • At power-on/At reset	• Connect an applicable module. • Reset the CPU module and run it again. If the same error code is displayed again, the cause is a hardware failure of the CPU module, I/O module, intelligent function module, END cover, branch module, or extension module. Please consult your local Mitsubishi representative.		LCPU
2126	**[SP.UNIT LAY ERR.]** The CPU module configuration in the multiple CPU system is either of the following. • There are empty slots between the QCPU and QCPU/motion controller. • A module other than the High Performance model QCPU/Process CPU (including the motion controller) is mounted on the left-hand side of the High Performance model QCPU/Process CPU. **■Collateral information** • Common information: Module No. (Slot No.) • Individual information: - **■Diagnostic timing** • At power-on/At reset	• Mount modules on the available slots so that the empty slots will be located on the right-hand side of the CPU module. • Remove the modules mounted on the left of the High Performance model QCPU or Process CPU. Mount a High Performance model QCPU or Process CPU on those slots. Mount the motion CPU on the right-hand side of the High Performance model QCPU/Process CPU.	RUN: Off ERR.:Flashing CPU Status:Stop	Qn(H) QnPH
2128	**[SP.UNIT LAY ERR.]** The unusable module is mounted on the extension base unit in the redundant system. **■Collateral information** • Common information: Module No. (Slot No.) • Individual information: - **■Diagnostic timing** • At power-on/At reset	Remove the unusable module from the extension base unit.	RUN: Off ERR.:Flashing CPU Status:Stop	QnPRH
2129	**[SP.UNIT LAY ERR.]** An A/QnA series module that cannot be used is mounted. **■Collateral information** • Common information: Module No. (Slot No.) • Individual information: - **■Diagnostic timing** • At power-on/At reset	Remove the A/QnA series module that cannot be used.	RUN: Off ERR.:Flashing CPU Status:Stop	QnU (except the QnUDV and QnUDPV)

Error code	Error and cause	Corrective action	LED status, CPU status	Corresponding CPU
2150	**[SP. UNIT VER. ERR.]** In a multiple CPU system, the control CPU of the intelligent function module incompatible with the multiple CPU system is set to other than CPU No.1. **■Collateral information** • Common information: Module No. (Slot No.) • Individual information: - **■Diagnostic timing** • At power-on/At reset	• Change the intelligent function module for the one compatible with the multiple CPU system (function version B). • Change the setting of the control CPU of the intelligent function module incompatible with the multiple CPU system to CPU No.1.	RUN: Off ERR.:Flashing CPU Status:Stop	Q00J/Q00/Q01 QnPH QnU
2151	**[SP. UNIT VER. ERR.]** Either of the following modules incompatible with the redundant system has been mounted in a redundant system. • MELSECNET/H modules • Ethernet modules • CC-Link IE Controller Network modules **■Collateral information** • Common information: Module No. (Slot No.) • Individual information: - **■Diagnostic timing** • At power-on/At reset/At writing to programmable controller	Ensure that the module supports the use in a redundant system when using any of the following modules. • MELSECNET/H modules • Ethernet modules • CC-Link IE Controller Network modules	RUN: Off ERR.:Flashing CPU Status:Stop	QnPRH
2170	**[SYSTEM LAY ERR.]** A module which the LCPU cannot recognize is connected. **■Collateral information** • Common information: - • Individual information: - **■Diagnostic timing** • At power-on/At reset	• Disconnect the module that cannot be recognized. • Reset the CPU module and run it again. If the same error code is displayed again, the cause is a hardware failure of the CPU module, I/O module, intelligent function module, END cover, branch module, or extension module. Please consult your local Mitsubishi representative.	RUN: Off ERR.:Flashing CPU Status:Stop	LCPU
2171	**[SYSTEM LAY ERR.]** • The branch module is not connected on the right of the CPU module or the extension module. • The branch module is not connected on the left of the END cover. **■Collateral information** • Common information: Module No. (Slot No.) • Individual information: - **■Diagnostic timing** • At power-on/At reset	• Connect the branch module on the right of the CPU module or the extension module. • Connect the branch module on the left of the END cover.	RUN: Off ERR.:Flashing CPU Status:Stop	LCPU
2172	**[SYSTEM LAY ERR.]** More than one branch module is connected on the same block. **■Collateral information** • Common information: Module No. (Slot No.) • Individual information: - **■Diagnostic timing** • At power-on/At reset	Disconnect branch modules other than the first one.	RUN: Off ERR.:Flashing CPU Status:Stop	LCPU
2173	**[SYSTEM LAY ERR.]** • The number of modules connected in the main block exceeds 10. • The number of modules connected in the extension blocks exceeds 11. **■Collateral information** • Common information: Module No. (Block No.) • Individual information: - **■Diagnostic timing** • At power-on/At reset	• Reduce the number of modules connected in the main block to 10 or less. • Reduce the number of modules connected in the extension blocks to 11 or less.	RUN: Off ERR.:Flashing CPU Status:Stop	LCPU

Error code	Error and cause	Corrective action	LED status, CPU status	Corresponding CPU
2174	**[SYSTEM LAY ERR.]** The number of extension blocks exceeds 3. **■Collateral information** • Common information: Module No. (Block No.) • Individual information: - **■Diagnostic timing** • At power-on/At reset	Reduce the number of extension blocks to 3 or less.	RUN: Off ERR.:Flashing CPU Status:Stop	L06CPU L06CPU-P L26CPU L26CPU-P L26CPU-BT L26CPU-PBT
	[SYSTEM LAY ERR.] The number of extension blocks exceeds 2. **■Collateral information** • Common information: Module No. (Block No.) • Individual information: - **■Diagnostic timing** • At power-on/At reset	Reduce the number of extension blocks to 2 or less.		L02SCPU L02SCPU-P L02CPU L02CPU-P
2175	**[SYSTEM LAY ERR.]** An END cover that does not support an extension system is connected in an extension system. **■Collateral information** • Common information: Module No. (Block No.) • Individual information: - **■Diagnostic timing** • At power-on/At reset	Replace the END cover with one that supports an extension system.	RUN: Off ERR.:Flashing CPU Status:Stop	LCPU
2176	**[SYSTEM LAY ERR.]** An extension cable is connected to the branch module during operation. **■Collateral information** • Common information: Module No. (Block No.) • Individual information: - **■Diagnostic timing** • Always	Disconnect the extension cable connected during operation.	RUN: Off ERR.:Flashing CPU Status:Stop	LCPU
2200	**[MISSING PARA.]** There is no parameter file in the drive specified as valid parameter drive by the DIP switches. **■Collateral information** • Common information: Drive Name • Individual information: - **■Diagnostic timing** • At power-on/At reset/STOP → RUN	• Check and correct the valid parameter drive settings made by the DIP switches. • Set the parameter file to the drive specified as valid parameter drive by the DIP switches.	RUN: Off ERR.:Flashing CPU Status:Stop	Qn(H) QnPH QnPRH
	[MISSING PARA.] There is no parameter file at the program memory. **■Collateral information** • Common information: Drive Name • Individual information: - **■Diagnostic timing** • At power-on/At reset/STOP → RUN	Set the parameter file to the program memory.		Q00J/Q00/Q01
	[MISSING PARA.] Parameter file does not exist in all drives where parameters will be valid. **■Collateral information** • Common information: Drive Name • Individual information: - **■Diagnostic timing** • At power-on/At reset/STOP → RUN	Set a parameter file in a drive to be valid.		QnU
	[MISSING PARA.] • When using a parameter file in an SD memory card, the SD memory card is being disabled by SM606 (SD memory card forced disable instruction). • When using a parameter file in an SD memory card, the SD memory card cannot be used because the CPU module is locked. **■Collateral information** • Common information: Drive Name • Individual information: - **■Diagnostic timing** • At power-on/At reset/At writing to programmable controller	• Cancel the SD memory card forced disable instruction. • Set a parameter file in a drive other than an SD memory card.		QnUDV QnUDPV

Error code	Error and cause	Corrective action	LED status, CPU status	Corresponding CPU
2200	**[MISSING PARA.]** • There is no parameter file in any drive. • When using a parameter file in an SD memory card, the SD memory card is being disabled by SM606 (SD memory card forced disable instruction). **■Collateral information** • Common information: Drive Name • Individual information: - **■Diagnostic timing** • At power-on/At reset/STOP → RUN	• Set a parameter file in a drive to be valid. • Cancel the SD memory card forced disable instruction.	RUN: Off ERR.:Flashing CPU Status:Stop	LCPU
2210	**[BOOT ERROR]** The contents of the boot file are incorrect. **■Collateral information** • Common information: Drive Name • Individual information: - **■Diagnostic timing** • At power-on/At reset	Check the boot setting.	RUN: Off ERR.:Flashing CPU Status:Stop	Q00J/Q00/Q01 Qn(H) QnPH QnPRH QnU LCPU
2211	**[BOOT ERROR]** File formatting is failed at a boot. **■Collateral information** • Common information: Drive Name • Individual information: - **■Diagnostic timing** • At power-on/At reset	• Reboot. • The cause is a hardware failure of the CPU module. Please consult your local Mitsubishi representative.	RUN: Off ERR.:Flashing CPU Status:Stop	Qn(H) QnPRH QnU LCPU
2213	**[BOOT ERROR]** The file was booted from the SD memory card to the program memory or standard ROM but it was not booted to the CPU module due to either of the following reasons. • The passwords for the password 32 do not match between transfer source file and destination file. • The password 32 is not configured for the transfer source file while it is configured for the destination file. **■Collateral information** • Common information: File name/Drive name • Individual information: - **■Diagnostic timing** • At power-on/At reset	• Check the setting of the password 32 for the transfer source file and destination files. • Delete the boot setting from the parameter file of the SD memory card.	RUN: Off ERR.:Flashing CPU Status:Stop	QnUDV QnUDPV LCPU
2214	**[BOOT ERROR]** The CPU module is locked. **■Collateral information** • Common information: - • Individual information: - **■Diagnostic timing** • At power-on/At reset	When using the CPU module change function with SD memory card, do not lock the CPU module.	RUN: Off ERR.:Flashing CPU Status:Stop	QnUDV QnUDPV
2220	**[RESTORE ERROR]** The device information (number of points) backed up by the device data backup function is different from that configured in "PLC Parameter". Perform a restoration per power-on and reset until the number of device points is identical to the value set in "PLC Parameter" or until the backup data are deleted. **■Collateral information** • Common information: File name/Drive name • Individual information: - **■Diagnostic timing** • At power-on/At reset	• Set the number of device points at the time of backup to be identical to the device point value set in "PLC Parameter". Then turn off and on or reset the power supply. • Delete the backed up data, turn the power supply from off to on, and reset.	RUN: Off ERR.:Flashing CPU Status:Stop	QnU LCPU

Error code	Error and cause	Corrective action	LED status, CPU status	Corresponding CPU
2221	**[RESTORE ERROR]** The device information backed up by the device data backup function is incomplete. (The power may have been off or the CPU module may have been reset during performing the backup.) Do not return the data when this error occurs. Also, delete the incomplete device information at the time of this error occurrence. **■Collateral information** • Common information: File name/Drive name • Individual information: - **■Diagnostic timing** • At power-on/At reset	Reset the CPU module and run it again.	RUN: Off ERR.:Flashing CPU Status:Stop	QnU LCPU
2225	**[RESTORE ERROR]** The model name of the restoration destination CPU module is different from the one of the backup source CPU module. **■Collateral information** • Common information: - • Individual information: - **■Diagnostic timing** • At power-on/At reset	Execute a restore for the CPU module whose name is same as the backup source CPU module.	RUN: Off ERR.:Flashing CPU Status:Stop	QnU LCPU
2226	**[RESTORE ERROR]** • The backup data file is corrupted. (The backup data file does not match the check code.) • Reading the backup data from the SRAM card did not end successfully. • Since the write protect switch of the SRAM card is set to on (write inhibited), the checked "Restore for the first time only" setting cannot be performed. **■Collateral information** • Common information: - • Individual information: - **■Diagnostic timing** • At power-on/At reset	• Since the backup data may have been corrupted, execute a restoration using other backup data. • Set the write protect switch of the SRAM card to off (write enabled).	RUN: Off ERR.:Flashing CPU Status:Stop	QnU (except the QnUDV and QnUDPV)
	[RESTORE ERROR] • The backup data file is corrupted. (The backup data file does not match the check code.) • Reading the backup data from the SD memory card did not end successfully. • The "Restore for the first time only" setting cannot be enabled because the write protect switch of the SD memory card has been set to on (write-prohibited). **■Collateral information** • Common information: - • Individual information: - **■Diagnostic timing** • At power-on/At reset	• Since the backup data may have been corrupted, execute a restoration using other backup data. • Set the write protect switch of the SD memory card to off (write-enabled).		QnUDV QnUDPV LCPU
2227	**[RESTORE ERROR]** Writing the backup data to the restoration destination drive did not end successfully. **■Collateral information** • Common information: File name/Drive name • Individual information: - **■Diagnostic timing** • At power-on/At reset	The possible cause is a failure of the CPU module. Execute data restoration to another CPU module.	RUN: Off ERR.:Flashing CPU Status:Stop	QnU LCPU
2228	**[RESTORE ERROR]** Standard RAM capacity of the restoration-target CPU module is insufficient. **■Collateral information** • Common information: - • Individual information: - **■Diagnostic timing** • At power-on/At reset	• Install an extended SRAM cassette. • Replace the extended SRAM cassette with the one with larger capacity.	RUN: Off ERR.:Flashing CPU Status:Stop	QnUDV QnUDPV

Error code	Error and cause	Corrective action	LED status, CPU status	Corresponding CPU
2229	**[RESTORE ERROR]** The CPU module is locked. **■Collateral information** • Common information: - • Individual information: - **■Diagnostic timing** • At power-on/At reset	When using the CPU module change function with memory card or the CPU module data backup/restoration function, do not lock the CPU module.	RUN: Off ERR.:Flashing CPU Status:Stop	QnUDV QnUDPV
2230	**[RESTORE ERROR]** • The system file does not exist in the backup data to be restored. • File(s) in the system file information does not exist in the folder of the backed up data. **■Collateral information** • Common information: - • Individual information: - **■Diagnostic timing** • At power-on/At reset	Restore with any other backup data because the backup data may have been corrupted.	RUN: Off ERR.:Flashing CPU Status:Stop	QnUDV QnUDPV
2231	**[RESTORE ERROR]** The data which is same as the one set the file password 32 is restored to the restoration destination CPU module. **■Collateral information** • Common information: - • Individual information: - **■Diagnostic timing** • At power-on/At reset	To use the CPU module data backup/restoration function, delete the file password 32 setting and then execute the function.	RUN: Off ERR.:Flashing CPU Status:Stop	QnUDV QnUDPV
2232	**[RESTORE ERROR]** • The folder with the setting values of SD919 to SD921 (Restoration target folder) does not exist in the SD memory card. • The setting value of SD917 (Restoration target data setting) is out of range. **■Collateral information** • Common information: - • Individual information: - **■Diagnostic timing** • At power-on/At reset	• Check and correct the setting value of SD919 to SD921 (Restoration target folder), and then execute the processing again. • Check and correct the setting value of SD917 (Restoration target data setting) and execute the processing again.	RUN: Off ERR.:Flashing CPU Status:Stop	QnUDV QnUDPV
2233	**[RESTORE ERROR]** Automatic restoration is executed while no SD memory card is inserted. **■Collateral information** • Common information: - • Individual information: - **■Diagnostic timing** • At power-on/At reset	• Insert or re-insert the SD memory card and then execute the processing again. • Check and correct the setting value of SD918 (Restoration function setting) and execute the processing again.	RUN: Off ERR.:Flashing CPU Status:Stop	QnUDV QnUDPV
2234	**[RESTORE ERROR]** • Automatic restoration is executed while the memory size exceeds the maximum capacity of the CPU module. • Automatic restoration is executed while the number of files exceeds the number of storable files of the CPU module. **■Collateral information** • Common information: - • Individual information: - **■Diagnostic timing** • At power-on/At reset	• Check the size of restoration target data so that it will not be larger than the memory capacity, and execute the processing again. • Check the number of files so that it will not exceed the number of storable files, and execute the processing again.	RUN: Off ERR.:Flashing CPU Status:Stop	QnUDV QnUDPV
2235	**[RESTORE ERROR]** The CPU module status (such as programs, parameters, and file structure) of restoration destination is different from the status at the time of backup. **■Collateral information** • Common information: - • Individual information: - **■Diagnostic timing** • At power-on/At reset	• Restore the data with the CPU module status at the time of backup. • Set SD917 (Restoration target data setting) to all the target data of backup and restoration and then restore the data.	RUN: Off ERR.:Flashing CPU Status:Stop	QnUDV QnUDPV

Error code	Error and cause	Corrective action	LED status, CPU status	Corresponding CPU
2240	**[LOAD ERROR]** The model of the load-destination CPU module is different from that of the load-source CPU module. **■Collateral information** • Common information: - • Individual information: - **■Diagnostic timing** • At power-on/At reset	Execute auto loading using the same model as that of the load-source CPU module.	RUN: Off ERR.:Flashing CPU Status:Stop	LCPU
2241	**[LOAD ERROR]** Reading of batch-save/load target data from the SD memory card failed. **■Collateral information** • Common information: - • Individual information: - **■Diagnostic timing** • At power-on/At reset	Execute auto loading using any other data because the batch-save/load target data may be corrupted.	RUN: Off ERR.:Flashing CPU Status:Stop	LCPU
2242	**[LOAD ERROR]** A system file (SVLDINF.QSL) does not exist in the load-target folder. **■Collateral information** • Common information: - • Individual information: - **■Diagnostic timing** • At power-on/At reset	Specify a folder where a system file (SVLDINF.QSL) is stored, and execute auto loading.	RUN: Off ERR.:Flashing CPU Status:Stop	LCPU
2243	**[LOAD ERROR]** The file password 32 of the load-destination file is different from that of the load-source file. Or, a file password 32 is not set to the load-source file while the load-destination file has a password. **■Collateral information** • Common information: - • Individual information: - **■Diagnostic timing** • At power-on/At reset	Set the same file password 32 to the load-destination file and the load-source file, and execute auto loading.	RUN: Off ERR.:Flashing CPU Status:Stop	LCPU
2244	**[LOAD ERROR]** • When the folder number (1 to 99) is set in SD909 (Auto loading target folder number), a folder with the corresponding number does not exist in the SD memory card. • The folder number out of the setting range (other than 0 to 99) is set in SD909 (Auto loading target folder number). **■Collateral information** • Common information: - • Individual information: - **■Diagnostic timing** • At power-on/At reset	• Check that a folder with the number corresponding to the one set in SD909 exists in the SD memory card, and execute auto loading. • Set the number in SD909 within the setting range, and execute auto loading.	RUN: Off ERR.:Flashing CPU Status:Stop	LCPU
2245	**[LOAD ERROR]** Loading data to the load-destination drive has failed. **■Collateral information** • Common information: - • Individual information: - **■Diagnostic timing** • At power-on/At reset	The possible cause is a failure of the CPU module. Execute auto loading to another CPU module.	RUN: Off ERR.:Flashing CPU Status:Stop	LCPU
2246	**[LOAD ERROR]** • When the folder number (1 to 99) is set in SD909 (Auto loading target folder number), an SD memory card is not inserted. • When the folder number (1 to 99) is set in SD909 (Auto loading target folder number), the SD memory card access control switch of the CPU module is not slid down. **■Collateral information** • Common information: - • Individual information: - **■Diagnostic timing** • At power-on/At reset	• Insert an SD memory card, and execute auto loading. • Slide up the SD memory card access control switch, and execute auto loading. • Check and correct the setting value of SD909 (Auto loading target folder number) and execute the processing again.	RUN: Off ERR.:Flashing CPU Status:Stop	LCPU

Error code	Error and cause	Corrective action	LED status, CPU status	Corresponding CPU
2247	**[LOAD ERROR]** • After auto loading, the memory size exceeds the capacity of the CPU module or SD memory card. • After auto loading, the number of stored files exceeds the number of files that can be stored in the CPU module or SD memory card. **■Collateral information** • Common information: - • Individual information: - **■Diagnostic timing** • At power-on/At reset	• Check the size of load-target data so that it will not be larger than the memory capacity, and execute auto loading. • Check the number of files so that it will not exceed the number of storable files, and execute auto loading.	RUN: Off ERR.:Flashing CPU Status:Stop	LCPU
2248	**[LOAD ERROR]** Auto loading was executed to a write-protected SD memory card. **■Collateral information** • Common information: - • Individual information: - **■Diagnostic timing** • At power-on/At reset	Cancel the write protection and execute the auto loading.	RUN: Off ERR.:Flashing CPU Status:Stop	LCPU
2290	**[INIT.TIME OVER]** Since an initial processing takes time, the host CPU module cannot respond to communication requests from other CPU modules in initial communications at a system configuration of a multiple CPU system and other CPU modules cannot be started up. **■Collateral information** • Common information: - • Individual information: - **■Diagnostic timing** • At power-on/At reset	Shorten the initial processing time. • Check the restoration setting or reconsider the number of files to be restored if the automatic restoration function of CPU module is executed.	RUN: Off ERR.:Flashing CPU Status:Stop	QnUDV QnUDPV
2300	**[ICM. OPE. ERROR]** • A memory card was removed without turning on SM609 (Memory card remove/insert enable flag). • A memory card was removed while SM600 (Memory card usable flags) is on. **■Collateral information** • Common information: Drive Name • Individual information: - **■Diagnostic timing** • When memory card is inserted or removed	• Turn on SM609 (Memory card remove/insert enable flag) and then remove the memory card. • Check that SM600 (Memory card usable flags) is off and then remove the memory card.	RUN: Off/On ERR.:Flashing/On CPU Status: Stop/Continue[*1]	Qn(H) QnPH QnPRH QnU (except the QnUDV and QnUDPV)
	[ICM. OPE. ERROR] An SD memory card was removed without the card being disabled. **■Collateral information** • Common information: Drive Name • Individual information: - **■Diagnostic timing** • When SD memory card is inserted or removed	Disable the card, and then remove it.		QnUDV QnUDPV LCPU

Error code	Error and cause	Corrective action	LED status, CPU status	Corresponding CPU
2301	**[ICM. OPE. ERROR]** • The memory card or SD memory card has not been formatted. • The formatting status of the memory card or SD memory card is incorrect. **■Collateral information** • Common information: Drive Name • Individual information: - **■Diagnostic timing** • When memory card is inserted or removed	• Format the memory card or SD memory card. • Reformat the memory card or SD memory card. If the memory card is a flash card, write data to the flash card in any of the following methods. 1) Write program memory to the ROM. 2) Write data to the CPU module (flash ROM). 3) Back up data to the flash card. 4) Write image data to an external device, such as a memory card writer. If the same error code is displayed again, the cause is a failure of the memory card or SD memory card. Please consult your local Mitsubishi representative.	RUN: Off/On ERR.:Flashing/On CPU Status: Stop/Continue[*1]	Qn(H) QnPH QnPRH QnU LCPU
	[ICM. OPE. ERROR] • Formatting an SD memory card is failed. • SD memory card failure is detected. **■Collateral information** • Common information: Drive Name • Individual information: - **■Diagnostic timing** • When memory card is inserted or removed	• Format the SD memory card. • Reformat the SD memory card. • Remove the SD memory card and insert it again. • Replace the SD memory card.		QnUDV QnUDPV
	[ICM. OPE. ERROR] The QCPU file does not exist in the Flash card. **■Collateral information** • Common information: Drive Name • Individual information: - **■Diagnostic timing** • When memory card is inserted or removed	Write the QCPU file the Flash card		Qn(H) QnPH QnPRH QnU
	[ICM. OPE. ERROR] • SRAM card failure is detected. (It occurs when automatic format is not set.) • Writing parameters was performed during setting file registers. **■Collateral information** • Common information: Drive Name • Individual information: - **■Diagnostic timing** • When memory card is inserted or removed/When writing to the memory card	• Format SRAM card after changing battery of SRAM card. • Before operation, set the parameter for the file register to "Not available" and write it to the CPU module.		QnU (except the QnUDV and QnUDPV)
2302	**[ICM. OPE. ERROR]** A memory card or SD memory card that cannot be used with a CPU module has been inserted. **■Collateral information** • Common information: Drive Name • Individual information: - **■Diagnostic timing** • When memory card is inserted or removed	• Format the memory card or SD memory card. • Reformat the memory card or SD memory card. • Check the memory card or SD memory card.	RUN: Off/On ERR.:Flashing/On CPU Status: Stop/Continue[*1]	Qn(H) QnPH QnPRH QnU LCPU
2350	**[CASSETTE ERROR]** An extended SRAM cassette is inserted or removed while the CPU module is powered on. **■Collateral information** • Common information: - • Individual information: - **■Diagnostic timing** • Always	• Do not insert or remove an extended SRAM cassette during operation. • Check that the extended SRAM cassette is securely installed to the CPU module. • If the same error code is displayed again, the cause is a failure of the extended SRAM cassette. Please consult your local Mitsubishi representative.	RUN: Off ERR.:Flashing CPU Status:Stop	QnUDV QnUDPV

Error code	Error and cause	Corrective action	LED status, CPU status	Corresponding CPU
2351	**[CASSETTE ERROR]** A failure was detected in the inserted extended SRAM cassette. **■Collateral information** • Common information: - • Individual information: - **■Diagnostic timing** • Always	• Check that the extended SRAM cassette is securely installed to the CPU module. • If the same error code is displayed again, the cause is a failure of the extended SRAM cassette. Please consult your local Mitsubishi representative.	RUN: Off ERR.:Flashing CPU Status:Stop	QnUDV QnUDPV
2352	**[CASSETTE ERROR]** An unsupported extended SRAM cassette is inserted. **■Collateral information** • Common information: - • Individual information: - **■Diagnostic timing** • At power-on/At reset	Replace the extended SRAM cassette with the one which is applicable for the QnUDVCPU and QnUDPVCPU.	RUN: Off ERR.:Flashing CPU Status:Stop	QnUDV QnUDPV
2400	**[FILE SET ERROR]** Automatic write to the standard ROM was performed on the CPU module that is incompatible with automatic write to the standard ROM. (Memory card where automatic write to the standard ROM was selected in the boot file was fitted and the parameter enable drive was set to the memory card.) **■Collateral information** • Common information: File name/Drive name • Individual information: - **■Diagnostic timing** • At power-on/At reset	• Execute automatic write to the standard ROM on the CPU module which is compatible with automatic write to the standard ROM • Write parameters and programs to the standard ROM using the programming tool. • Change the memory card for the one where automatic write to the standard ROM has not been set, and perform boot operation from the memory card.	RUN: Off ERR.:Flashing CPU Status:Stop	Qn(H) QnPH QnPRH
	[FILE SET ERROR] The file specified with a parameter does not exist. **■Collateral information** • Common information: File name/Drive name • Individual information: Parameter number **■Diagnostic timing** • At power-on/At reset/At writing to programmable controller/STOP → RUN	Read the individual information of the error using the programming tool to identify the numeric value (parameter No.). Check the drive name and file name of the parameter corresponding to the value, and correct it as necessary. Create the specified file and write it to the CPU module.		QCPU (except the QnUDV and QnUDPV)
	[FILE SET ERROR] • The file specified with a parameter does not exist. • When using a file in an SD memory card, the SD memory card is being disabled by SM606 (SD memory card forced disable instruction). **■Collateral information** • Common information: File name/Drive name • Individual information: Parameter number **■Diagnostic timing** • At power-on/At reset/At writing to programmable controller/STOP → RUN	• Read the individual information of the error using the programming tool to identify the numeric value (parameter No.). Check the drive name and file name of the parameter corresponding to the value, and correct it as necessary. Create the specified file and write it to the CPU module. • Cancel the SD memory card forced disable instruction.		QnUDV QnUDPV LCPU

Error code	Error and cause	Corrective action	LED status, CPU status	Corresponding CPU
2401	**[FILE SET ERROR]** Program memory capacity was exceeded by performing boot operation or automatic write to the standard ROM. **■Collateral information** • Common information: File name/Drive name • Individual information: Parameter number **■Diagnostic timing** • At power-on/At reset/At writing to programmable controller	• Check and correct the parameters (boot setting). • Delete unnecessary files in the program memory. • Choose "Clear program memory" for boot in the parameter so that boot is started after the program memory is cleared.	RUN: Off ERR.:Flashing CPU Status:Stop	Qn(H) QnPH QnPRH
	[FILE SET ERROR] Program memory capacity was exceeded by performing boot operation. **■Collateral information** • Common information: File name/Drive name • Individual information: Parameter number **■Diagnostic timing** • At power-on/At reset	• Check and correct the parameters (boot setting). • Delete unnecessary files in the program memory. • Choose "Clear program memory" for boot in the parameter so that boot is started after the program memory is cleared.		QnU LCPU
	[FILE SET ERROR] The file specified by parameters cannot be made. **■Collateral information** • Common information: File name/Drive name • Individual information: Parameter number **■Diagnostic timing** • At power-on/At reset/At writing to programmable controller/STOP → RUN	• Read the individual information of the error using the programming tool to identify the numeric value (parameter No.). Check the drive name, file name, and size of the parameter corresponding to the value, and correct it as necessary. • Format the drive. • Delete unnecessary files on the drive to increase free space.		
	[FILE SET ERROR] • Although setting is made to use the device data storage file, there is no empty capacity required for creating the device data storage file in the standard ROM. • When the latch data backup function (to standard ROM) is used, there is no empty capacity required for storing backup data in standard ROM. (The parameter number "$FFFF_H$" is displayed for the individual information of the error.) **■Collateral information** • Common information: File name/Drive name • Individual information: Parameter number **■Diagnostic timing** • At power-on/At reset/At writing to programmable controller/STOP → RUN	Secure the empty capacity of the standard ROM.		
	[FILE SET ERROR] • Standard RAM capacity is insufficient that error history of the module cannot be stored. • Standard RAM capacity is insufficient that the file register data cannot be stored. **■Collateral information** • Common information: File name/Drive name • Individual information: Parameter number **■Diagnostic timing** • At power-on/At reset/At writing to programmable controller/STOP → RUN	Secure sufficient space in the standard RAM.		
2406	**[FILE SET ERROR]** When the extended data register and extended link register are configured in the File Register Extended Setting in the Device tab of "PLC Parameter", the size of the file register file is smaller than that specified in the PLC File tab. **■Collateral information** • Common information: File name/Drive name • Individual information: Parameter number **■Diagnostic timing** • STOP → RUN	• Correct the size for the file register file in the PLC File tab of "PLC Parameter". • Correct the setting for the "File Register Extended Setting" in the Device tab of "PLC Parameter".	RUN: Off ERR.:Flashing CPU Status:Stop	QnU LCPU

Error code	Error and cause	Corrective action	LED status, CPU status	Corresponding CPU
2410	**[FILE OPE. ERROR]** • The specified program does not exist in the program memory. • This error may occur when the ECALL, EFCALL, PSTOP, PSCAN, POFF or PLOW instruction is executed. • The specified file does not exist. • A required file is not set in the PLC File tab of "PLC Parameter". **■Collateral information** • Common information: File name/Drive name • Individual information: Program error location **■Diagnostic timing** • When instruction executed	• Read individual information of the error using the programming tool to identify the numeric value (program error location). Check the error step corresponding to the value and correct it as necessary. Create the specified file and write it to the CPU module. • If the specified file does not exist, write the file to the target memory. Or correct the file specification by a instruction. • Set the required file in the PLC File tab of "PLC Parameter".	RUN: Off/On ERR.:Flashing/On CPU Status: Stop/Continue*1	Qn(H) QnPH QnPRH QnU LCPU
2411	**[FILE OPE. ERROR]** • The file cannot be specified by the program, such as comment file. • The specified program exists in the program memory, but has not been registered in the program setting of "PLC Parameter". This error may occur when the ECALL, EFCALL, PSTOP, PSCAN, POFF or PLOW instruction is executed. **■Collateral information** • Common information: File name/Drive name • Individual information: Program error location **■Diagnostic timing** • When instruction executed	Read individual information of the error using the programming tool to identify the numeric value (program error location). Check the error step corresponding to the value and correct it as necessary.	RUN: Off/On ERR.:Flashing/On CPU Status: Stop/Continue*1	Qn(H) QnPH QnPRH QnU LCPU
2412	**[FILE OPE. ERROR]** This SFC program file cannot be specified with the program. **■Collateral information** • Common information: File name/Drive name • Individual information: Program error location **■Diagnostic timing** • When instruction executed	Read individual information of the error using the programming tool to identify the numeric value (program error location). Check the error step corresponding to the value and correct it as necessary.	RUN: Off/On ERR.:Flashing/On CPU Status: Stop/Continue*1	Qn(H) QnPH QnPRH QnU LCPU
2413	**[FILE OPE. ERROR]** The file specified in the program was not written. **■Collateral information** • Common information: File name/Drive name • Individual information: Program error location **■Diagnostic timing** • When instruction executed	Read individual information of the error using the programming tool to identify the numeric value (program error location). Check the error step corresponding to the value and correct it as necessary. Check to ensure that the designated file has not been write protected.	RUN: Off/On ERR.:Flashing/On CPU Status: Stop/Continue*1	Qn(H) QnPH QnPRH
2500	**[CAN'T EXE. PRG.]** • Any of the program files are using a device that is out of the range configured in the Device tab of "PLC Parameter". • After changing the device setting in "PLC Parameter", only the parameters were written to the CPU module. • Although an SFC program exists, the number of step relay points is insufficient in the Device tab of "PLC Parameter". **■Collateral information** • Common information: File name/Drive name • Individual information: - **■Diagnostic timing** • At power-on/At reset/STOP → RUN	• Read the common information of the error using the programming tool to identify the numeric value (file name). Verify the device assignments of the program file corresponding to the value with its parameter setting, and correct them as necessary. • Whenever a device setting is changed, write both the parameter and program file to the CPU module. • To use the SFC program, set the number of step relay points to appropriate value.	RUN: Off ERR.:Flashing CPU Status:Stop	QCPU LCPU
	[CAN'T EXE. PRG.] • After changing the index modification setting in "PLC Parameter", only the parameters were written to the CPU module. **■Collateral information** • Common information: File name/Drive name • Individual information: - **■Diagnostic timing** • At power-on/At reset/STOP → RUN	• Whenever an index modification setting is changed in "PLC Parameter", batch-write the parameter and program file to the CPU module.	RUN: Off ERR.:Flashing CPU Status:Stop	QnU LCPU

Error code	Error and cause	Corrective action	LED status, CPU status	Corresponding CPU
2501	**[CAN'T EXE. PRG.]** More than one program files exist although no program name is entered in the Program tab of "PLC Parameter". **■Collateral information** • Common information: File name/Drive name • Individual information: - **■Diagnostic timing** • At power-on/At reset/STOP → RUN	Enter the program names in the Program tab of "PLC Parameter". Or delete unnecessary programs.	RUN: Off ERR.:Flashing CPU Status:Stop	Qn(H) QnPH QnPRH QnU LCPU
	[CAN'T EXE. PRG.] • There are three or more program files. • The program name differs from the program contents. **■Collateral information** • Common information: File name/Drive name • Individual information: - **■Diagnostic timing** • At power-on/At reset/STOP → RUN	• Delete unnecessary program files. • Match the program name with the program contents.		Q00J/Q00/Q01
2502	**[CAN'T EXE. PRG.]** The program file is incorrect. Or the contents of the file are not programs. **■Collateral information** • Common information: File name/Drive name • Individual information: - **■Diagnostic timing** • At power-on/At reset/STOP → RUN	Ensure that the program version is ***.QPG and the file contents are programs.	RUN: Off ERR.:Flashing CPU Status:Stop	QCPU LCPU
	[CAN'T EXE. PRG.] The program file is not the one for the redundant CPU. **■Collateral information** • Common information: File name/Drive name • Individual information: - **■Diagnostic timing** • At power-on/At reset/STOP → RUN	Create a program with GX Developer or PX Developer specifying the redundant CPU (Q12PRH/Q25PRH) as the PLC type, and write it to the CPU module.		QnPRH
2503	**[CAN'T EXE. PRG.]** There are no program files at all. **■Collateral information** • Common information: File name/Drive name • Individual information: - **■Diagnostic timing** • At power-on/At reset/STOP → RUN	• Check program configuration. • Check parameters and program configuration.	RUN: Off ERR.:Flashing CPU Status:Stop	QCPU LCPU
2504	**[CAN'T EXE. PRG.]** Two or more SFC normal programs or control programs have been designated. **■Collateral information** • Common information: File name/Drive name • Individual information: - **■Diagnostic timing** • At power-on/At reset/STOP → RUN/When SFC program is executed	• Check program configuration. • Check parameters and program configuration.	RUN: Off ERR.:Flashing CPU Status:Stop	Qn(H) QnPH QnPRH QnU LCPU
	[CAN'T EXE. PRG.] There are two or more SFC programs. **■Collateral information** • Common information: File name/Drive name • Individual information: - **■Diagnostic timing** • At power-on/At reset/STOP → RUN	Reduce the SFC programs to one.		Q00J/Q00/Q01

Error code	Error and cause	Corrective action	LED status, CPU status	Corresponding CPU
2700	**[REMOTE PASS.FAIL]** The count of remote password mismatches reached the upper limit. **■Collateral information** • Common information: - • Individual information: - **■Diagnostic timing** • Always	Check for illegal accesses. If any illegal access is identified, take actions such as disabling communication of the connection. If it was identified not illegal, clear the error and perform the following. (Clearing the error also clears the remote password mismatch counts.) • Check if the remote password sent is correct. • Check if the remote password has been locked. • Check if concurrent access was made from multiple devices to one connection by UDP. • Check if the upper limit of the remote password mismatch count is too low.	RUN: On ERR.:On CPU Status:Continue	QnU*3 LCPU*3
2710	**[SNTP OPE.ERROR]** Time setting failed when the programmable controller was powered ON or reset. **■Collateral information** • Common information: - • Individual information: - **■Diagnostic timing** • When time setting function is executed	• Check if the time setting function is set up correctly. • Check if the specified SNTP server is operating normally, or if any failure has occurred on the network connected to the specified SNTP server computer.	RUN: Off/On ERR.:Flashing/On CPU Status: Stop/Continue*1	QnU*3 LCPU*3
2720	**[KEY AUTHEN. ERR.]** • The security key set to the file is corrupted and does not match the one set to the CPU module. • The security key set to the CPU module is corrupted and does not match the one set to the file. **■Collateral information** • Common information: - • Individual information: - **■Diagnostic timing** • At power-on/At reset/STOP → RUN	• Rewrite the file to the CPU module. • The cause is a hardware failure of the CPU module. Please consult your local Mitsubishi representative.	RUN: Off ERR.:Flashing CPU Status:Stop	QnUDV QnUDPV
2900	**[DISPLAY ERROR]** The display unit was attached or detached while the CPU module is on. **■Collateral information** • Common information: - • Individual information: - **■Diagnostic timing** • Always	• Do not detach the display unit during operation. • Ensure that the display unit is securely attached to the CPU module. • Reset the CPU module and run it again. If the same error is displayed again, the CPU module or display unit is faulty. Please consult your local Mitsubishi representative.	RUN: On ERR.:On CPU Status:Continue	LCPU
2901	**[DISPLAY ERROR]** A failure was detected in the display unit. (in a initial processing) **■Collateral information** • Common information: - • Individual information: - **■Diagnostic timing** • At power-on/At reset	• Ensure that the display unit is securely attached to the CPU module. • Reset the CPU module and run it again. If the same error is displayed again, the CPU module or display unit is faulty. Please consult your local Mitsubishi representative.	RUN: On ERR.:On CPU Status:Continue	LCPU
2902	**[DISPLAY ERROR]** A failure was detected in the display unit. (during operation) **■Collateral information** • Common information: - • Individual information: - **■Diagnostic timing** • Always	• Ensure that the display unit is securely attached to the CPU module. • Reset the CPU module and run it again. If the same error is displayed again, the CPU module or display unit is faulty. Please consult your local Mitsubishi representative.	RUN: On ERR.:On CPU Status:Continue	LCPU
2998	**[CAN'T ACTIVATE]** A device required for the license authentication does not exist. **■Collateral information** • Common information: - • Individual information: - **■Diagnostic timing** • When instruction executed	Please consult your local Mitsubishi representative.	RUN: Off ERR.:Flashing CPU Status:Stop	QnUDV QnUDPV LCPU

Error code	Error and cause	Corrective action	LED status, CPU status	Corresponding CPU
2999	**[CAN'T ACTIVATE]** The specified license key is incorrect. **■Collateral information** • Common information: - • Individual information: - **■Diagnostic timing** • When instruction executed	Check the license key and specify correct one.	RUN: Off ERR.:Flashing CPU Status:Stop	QnUDV QnUDPV LCPU

*1 The operating status of the CPU module after an error has occurred can be set in parameter. (LED indication changes according to the status.)

*2 The operating status of each intelligent function module after an error has occurred can be set in parameter (stop or continue).

*3 Built-in Ethernet port QCPU and Built-in Ethernet port LCPU

*4 The QnUDPVCPU does not support the AnS series modules.

*5 Setting LX/LY on the remote master station or multiplexed remote master station can detect an error that is occurred in the remote I/O station. If the settings are not configured, the remote master station or multiplexed remote master station does not detect the error occurred in the remote I/O station. (The error can be checked on the remote I/O station.)

Appendix 1.5 List of error codes (3000 to 3999)

The following table shows the error messages, the error contents and causes, and the corrective actions for the error codes (3000 to 3999).

Error code	Error and cause	Corrective action	LED status, CPU status	Corresponding CPU
3000	**[PARAMETER ERROR]** In a multiple CPU system, the intelligent function module under control of another CPU is specified in the interrupt pointer setting of the PLC parameter. **■Collateral information** • Common information: File name/Drive name • Individual information: Parameter number **■Diagnostic timing** • At power-on/At reset/STOP → RUN	• Specify the start I/O number of the intelligent function module under control of the host CPU. • Delete the interrupt pointer setting of the parameter.	RUN: Off ERR.:Flashing CPU Status:Stop	Qn(H) QnPH QnU
	[PARAMETER ERROR] The PLC parameter settings for timer time limit setting, the RUN-PAUSE contact, the common pointer number, general data processing, number of empty slots, system interrupt settings, baud rate setting, and service processing setting are outside the range for the CPU module. **■Collateral information** • Common information: File name/Drive name • Individual information: Parameter number **■Diagnostic timing** • At power-on/At reset/STOP → RUN/At writing to programmable controller	• Check that the I/O assignment setting of the PLC parameter and the mounted/connected modules match. • Read the individual information of the error using the programming tool to identify the numeric value (parameter No.). Check the parameters corresponding to the value, and correct them as necessary. • Rewrite corrected parameters to the CPU module, reload the CPU power supply and/or reset the module. • If the same error occurs, the cause is a hardware failure. Please consult your local Mitsubishi representative.		QCPU
	[PARAMETER ERROR] In a program memory check, the check capacity has not been set within the range applicable for the CPU module. **■Collateral information** • Common information: File name/Drive name • Individual information: Parameter number **■Diagnostic timing** • At power-on/At reset/STOP → RUN/At writing to programmable controller			QnPH QnPRH
	[PARAMETER ERROR] The parameter setting in the individual information of the error (SD16) is invalid. **■Collateral information** • Common information: File name/Drive name • Individual information: Parameter number **■Diagnostic timing** • At power-on/At reset/STOP → RUN/At writing to programmable controller			QCPU LCPU
	[PARAMETER ERROR] The ATA card is set to the memory card slot when the specified drive for the file register is set to "memory card (ROM)" and [Use the following file] or [Use the same file name as the program] (either one is allowed) is set in the PLC file setting. **■Collateral information** • Common information: File name/Drive name • Individual information: Parameter number **■Diagnostic timing** • At power-on/At reset/STOP → RUN/At writing to programmable controller			QnU (except the QnUDV and QnUDPV)

Error code	Error and cause	Corrective action	LED status, CPU status	Corresponding CPU
3000	**[PARAMETER ERROR]** Any of the values for the Timer Limit Setting, RUN-PAUSE Contacts, Common Pointer No., Points Occupied by Empty Slot, System Interrupt Setting, or Service Processing Setting option configured in "PLC Parameter" are outside the range of the CPU module. **■Collateral information** • Common information: File name/Drive name • Individual information: Parameter number **■Diagnostic timing** • At power-on/At reset/STOP → RUN/At writing to programmable controller	• Read the individual information of the error using the programming tool to identify the numeric value (parameter No.). Check the parameters corresponding to the value, and correct them as necessary. • If the error occurs even after the parameters are corrected, the cause is a failure of the program memory or standard RAM of the CPU module, or SD memory card. Please consult your local Mitsubishi representative.	RUN: Off ERR.:Flashing CPU Status:Stop	LCPU
3001	**[PARAMETER ERROR]** The parameter settings are corrupted. **■Collateral information** • Common information: File name/Drive name • Individual information: Parameter number **■Diagnostic timing** • At power-on/At reset/STOP → RUN/At writing to programmable controller	• Check that the I/O assignment setting of the PLC parameter and the mounted/connected modules match. • Read the individual information of the error using the programming tool to identify the numeric value (parameter No.). Check the parameters corresponding to the value, and correct them as necessary. • Rewrite corrected parameters to the CPU module, reload the CPU power supply and/or reset the module. • If the same error occurs, the cause is a hardware failure. Please consult your local Mitsubishi representative.	RUN: Off ERR.:Flashing CPU Status:Stop	QCPU LCPU
	[PARAMETER ERROR] Unsupported parameters exist. • Other than "1" is set for the group number in the CC-Link IEF Basic setting. **■Collateral information** • Common information: File name/Drive name • Individual information: Parameter number **■Diagnostic timing** • At power-on/At reset/STOP → RUN/At writing to programmable controller	Check the version of the CPU module used and use the CPU module that supports the parameter. Use the CPU module with parameters available to the CPU module used. • Set the network configuration so that the total number of occupied stations is 16 or less and set "1" for the group number.		QnUDV QnUDPV
	[PARAMETER ERROR] Unsupported parameters exist. • In the CC-Link IEF Basic setting, the total number of occupied stations exceeds eight. **■Collateral information** • Common information: File name/Drive name • Individual information: Parameter number **■Diagnostic timing** • At power-on/At reset/STOP → RUN/At writing to programmable controller	Check the version of the CPU module used and use the CPU module that supports the parameter. Use the CPU module with parameters available to the CPU module used. • Set the network configuration so that the total number of occupied stations is eight or less.		LCPU

Error code	Error and cause	Corrective action	LED status, CPU status	Corresponding CPU
3002	**[PARAMETER ERROR]** When "Use the following file" is selected for the file register in the PLC file setting of "PLC Parameter", the specified file does not exist although the file register capacity has been set. **■Collateral information** • Common information: File name/Drive name • Individual information: Parameter number **■Diagnostic timing** • At power-on/At reset/STOP → RUN/At writing to programmable controller	• Check that the I/O assignment setting of the PLC parameter and the mounted/connected modules match. • Read the individual information of the error using the programming tool to identify the numeric value (parameter No.). Check the parameters corresponding to the value, and correct them as necessary. • Rewrite corrected parameters to the CPU module, reload the CPU power supply and/or reset the module. • If the same error occurs, the cause is a hardware failure. Please consult your local Mitsubishi representative.	RUN: Off ERR.:Flashing CPU Status:Stop	Qn(H) QnPH QnPRH
	[PARAMETER ERROR] When "Use the following file" is selected for File Register in the PLC File tab of "PLC Parameter" and "Capacity" is not set, the file register file does not exist in the specified memory. **■Collateral information** • Common information: File name/Drive name • Individual information: Parameter number **■Diagnostic timing** • At power-on/At reset/STOP → RUN/At writing to programmable controller			QnU LCPU
	[PARAMETER ERROR] When "Use the following file" is selected for a device data storage file in the PLC File tab of "PLC Parameter" and "Capacity" is not set, the device data storage file does not exist in the specified memory. **■Collateral information** • Common information: File name/Drive name • Individual information: Parameter number **■Diagnostic timing** • At power-on/At reset/STOP → RUN/At writing to programmable controller			

Error code	Error and cause	Corrective action	LED status, CPU status	Corresponding CPU
3003	**[PARAMETER ERROR]** The automatic refresh range of the multiple CPU system exceeded the file register capacity. **■Collateral information** • Common information: File name/Drive name • Individual information: Parameter number **■Diagnostic timing** • When an END instruction or a COM instruction executed	Change the file register file for the one that the entire target range can be refreshed.	RUN: Off ERR.:Flashing CPU Status:Stop	Qn(H) QnPH QnU
	[PARAMETER ERROR] The number of device points set in the Device tab of "PLC Parameter" is outside the range of the specifications of the CPU module. **■Collateral information** • Common information: File name/Drive name • Individual information: Parameter number **■Diagnostic timing** • At power-on/At reset/STOP → RUN/At writing to programmable controller	• Read the individual information of the error using the programming tool to identify the numeric value (parameter No.). Check the parameters corresponding to the value, and correct them as necessary. • If the error occurs even after the parameters are corrected, the cause is a failure of the program memory, memory card, or SD memory card of the CPU module. Please consult your local Mitsubishi representative.		QCPU LCPU
	[PARAMETER ERROR] The setting of the CC-Link IE Field Network Basic refresh range crosses over the boundary between the internal user device and the extended data register (D) or extended link register (W). **■Collateral information** • Common information: File name/Drive name • Individual information: Parameter number **■Diagnostic timing** • At power-on/At reset/STOP → RUN/At writing to programmable controller	Set the refresh range so that it does not cross over the boundary between the internal user device and the extended data register (D) or extended link register (W).		QnUDV QnUDPV LCPU
	[PARAMETER ERROR] The CC-Link IE Field Network Basic refresh range exceeded the file register capacity. **■Collateral information** • Common information: File name/Drive name • Individual information: Parameter number **■Diagnostic timing** • At power-on/At reset/STOP → RUN/At writing to programmable controller/When an END instruction or a COM instruction executed	• Change the file register file for the one that the entire target range can be refreshed. • Increase the file register capacity, or change the refresh settings.		QnUDV QnUDPV LCPU
3004	**[PARAMETER ERROR]** The parameter file is incorrect. Alternatively, the contents of the file are not parameters. **■Collateral information** • Common information: File name/Drive name • Individual information: Parameter number **■Diagnostic timing** • At power-on/At reset/STOP → RUN/At writing to programmable controller	Ensure that the parameter file version is ***.QPA and the file contents are parameters.	RUN: Off ERR.:Flashing CPU Status:Stop	QCPU LCPU
3005	**[PARAMETER ERROR]** The contents of the parameter are broken. **■Collateral information** • Common information: File name/Drive name • Individual information: Parameter number **■Diagnostic timing** • At power-on/At reset/STOP → RUN	• Read the individual information of the error using the programming tool to identify the numeric value (parameter No.). Check the parameters corresponding to the value, and correct them as necessary. • Write the modified parameter items to the CPU module again, and power-on the programmable controller or reset the CPU module. • If the same error occurred, the cause is a hardware failure. Please consult your local Mitsubishi representative.	RUN: Off ERR.:Flashing CPU Status:Stop	Qn(H) QnPH QnPRH

Error code	Error and cause	Corrective action	LED status, CPU status	Corresponding CPU
3006	**[PARAMETER ERROR]** • The high speed interrupt is set in a Q02CPU. • The high speed interrupt is set in a multiple CPU system. • The high speed interrupt is set when a QA1S6□B or QA6□B is used. • No module is installed at the I/O address designated by the high speed interrupt. **■Collateral information** • Common information: File name/Drive name • Individual information: Parameter number **■Diagnostic timing** • At power-on/At reset/STOP → RUN/At writing to programmable controller	• Delete the setting of the Q02CPU' s high speed interrupt. To use high speed interrupts, change the CPU module to one of the Q02H/Q06H/Q12H/Q25HCPU. • To use a multiple CPU system, delete the setting of the high-speed interrupt. To use high speed interrupts, change the system to a single CPU system. • To use either the QA1S6□B or QA6□B, delete the setting of the high speed interrupt. • To use high speed interrupts, do not use the QA1S6□B/QA6□B. • Re-examine the I/O address designated by the high speed interrupt setting.	RUN: Off ERR.:Flashing CPU Status:Stop	Qn(H)
	[PARAMETER ERROR] • No module is installed at the I/O address designated by the high speed interrupt or the I/O address is outside the range. • The CPU device setting for high speed buffer transfer is outside the range. **■Collateral information** • Common information: File name/Drive name • Individual information: Parameter number **■Diagnostic timing** • At power-on/At reset/STOP → RUN/At writing to programmable controller	• Re-examine the I/O address designated by the high speed interrupt setting. • Re-examine the buffer range designated by the high speed interrupt setting.		QnUDV QnUDPV
3007	**[PARAMETER ERROR]** The parameter file in the drive specified as valid parameter drive by the DIP switches is inapplicable for the CPU module. **■Collateral information** • Common information: File name/Drive name • Individual information: Parameter number **■Diagnostic timing** • At power-on/At reset/STOP → RUN/At writing to programmable controller	Create parameters using the programming tool and write them to the drive specified as a parameter-valid drive by the DIP switches.	RUN: Off ERR.:Flashing CPU Status:Stop	QnPRH
3009	**[PARAMETER ERROR]** In a multiple CPU system, the modules for AnS, A, Q2AS and QnA have been set to multiple control CPUs. **■Collateral information** • Common information: File name/Drive name • Individual information: Parameter number **■Diagnostic timing** • At power-on/At reset	Re-set the parameter I/O assignment to control them under one CPU module. (Change the parameters of all CPUs in the multiple CPU system.)	RUN: Off ERR.:Flashing CPU Status:Stop	Qn(H) QnU (except the QnUDPV)
3010	**[PARAMETER ERROR]** The parameter-set number of CPU modules differs from the actual number in a multiple CPU system. **■Collateral information** • Common information: File name/Drive name • Individual information: Parameter number **■Diagnostic timing** • At power-on/At reset/STOP → RUN/At writing to programmable controller	The number of CPU modules in the multiple CPU system must be the same as the value derived as follows: (the number of CPU modules set in the multiple CPU setting) - (the number of PLC (empty) slots set in the I/O assignment).	RUN: Off ERR.:Flashing CPU Status:Stop	Qn(H) QnPH
3012	**[PARAMETER ERROR]** Multiple CPU setting or control CPU setting differs from that of the reference CPU settings in a multiple CPU system. **■Collateral information** • Common information: File name/Drive name • Individual information: Parameter number **■Diagnostic timing** • At power-on/At reset/STOP → RUN/At writing to programmable controller	Match the multiple CPU setting or control CPU setting in the PLC parameter with that of the reference CPU (CPU No.1) settings.	RUN: Off ERR.:Flashing CPU Status:Stop	Q00/Q01 Qn(H) QnU

Error code	Error and cause	Corrective action	LED status, CPU status	Corresponding CPU
3013	**[PARAMETER ERROR]** Multiple CPU auto refresh setting is any of the following in a multiple CPU system. • When a bit device is specified as a refresh device, a number other than a multiple of 16 is specified for the refresh-starting device. • The device specified is other than the one that may be specified. • The number of send points is an odd number. **■Collateral information** • Common information: File name/Drive name • Individual information: Parameter number **■Diagnostic timing** • At power-on/At reset/STOP → RUN/At writing to programmable controller	Check the following in the refresh setting in the multiple CPU settings window, and correct the setting. • When specifying the bit device, specify a multiple of 16 for the refresh starting device. • Specify the device that may be specified for the refresh device. • Set the number of send points to an even number.	RUN: Off ERR.:Flashing CPU Status:Stop	Qn(H) QnPH
	[PARAMETER ERROR] Multiple CPU auto refresh setting is any of the following in a multiple CPU system. • The total number of transmission points is greater than the maximum number of refresh points. **■Collateral information** • Common information: File name/Drive name • Individual information: Parameter number **■Diagnostic timing** • At power-on/At reset/STOP → RUN/At writing to programmable controller	Check the following in the refresh setting in the multiple CPU settings window, and correct the setting. • The total number of transmission points is within the maximum number of refresh points.		Q00/Q01
	[PARAMETER ERROR] Multiple CPU auto refresh setting is any of the following in a multiple CPU system. • The device specified is other than the one that may be specified. • The number of send points is an odd number. • The total number of send points is greater than the maximum number of refresh points. • The setting of the refresh range crosses over the boundary between the internal user device and the extended data register (D) or extended link register (W). • No device is set in the host CPU send range. **■Collateral information** • Common information: File name/Drive name • Individual information: Parameter number **■Diagnostic timing** • At power-on/At reset/STOP → RUN/At writing to programmable controller	Check the following in the refresh setting in the multiple CPU settings window, and correct the setting. • Specify the device that may be specified for the refresh device. • Set the number of send points to an even number. • Set the total number of send points within the range of the maximum number of refresh points. • Set the refresh range so that it does not cross over the boundary between the internal user device and the extended data register (D) or extended link register (W). • For the send range of the host CPU, refresh target device must be specified. If a send range is not necessary, delete the applicable send range.		QnU
3014	**[PARAMETER ERROR]** • In a multiple CPU system, the online module change parameter (multiple CPU system parameter) settings differ from those of the reference CPU. • In a multiple CPU system, the online module change setting is enabled although the CPU module mounted does not support online module change parameter. • In a multiple CPU system, online module change parameter was corrected and then it was written to the CPU module. **■Collateral information** • Common information: File name/Drive name • Individual information: Parameter number **■Diagnostic timing** • At power-on/At reset/At writing to programmable controller	• Match the online module change parameter with that of the reference CPU. • If the CPU module that does not support online module change is mounted, replace it with the CPU module that supports online module change.	RUN: Off ERR.:Flashing CPU Status:Stop	Qn(H) QnPH QnU

Error code	Error and cause	Corrective action	LED status, CPU status	Corresponding CPU
3015	**[PARAMETER ERROR]** In a multiple CPU system configuration, the CPU verified is different from the one set in the parameter setting. **■Collateral information** • Common information: File name/Drive name • Individual information: Parameter number/CPU No. **■Diagnostic timing** • At power-on/At reset/STOP → RUN/At writing to programmable controller	Read the individual information of the error using the programming tool to identify the numeric value (parameter No./CPU No.). Check the parameters and its configuration corresponding to the value, and correct them as necessary.	RUN: Off ERR.:Flashing CPU Status:Stop	QnU
3016	**[PARAMETER ERROR]** The CPU module incompatible with multiple CPU synchronized boot-up is set as the target for the synchronized boot-up in the [Multiple CPU synchronous startup setting]. **■Collateral information** • Common information: File name/Drive name • Individual information: Parameter number/CPU No. **■Diagnostic timing** • At power-on/At reset	Delete the CPU module incompatible with multiple CPU synchronized boot-up from the setting.	RUN: Off ERR.:Flashing CPU Status:Stop	QnU
3040	**[PARAMETER ERROR]** The parameter file is damaged. **■Collateral information** • Common information: - • Individual information: - **■Diagnostic timing** • At power-on/At reset	Write the parameters configured in "PLC parameter" and "Network parameter" and remote password to a parameter-valid drive, and power on the system again or reset the CPU module. If the same error occurs, the cause is a hardware failure. Please consult your local Mitsubishi representative.	RUN: Off ERR.:Flashing CPU Status:Stop	Qn(H) QnPH QnPRH
3041	**[PARAMETER ERROR]** Parameter file of intelligent function module is damaged. **■Collateral information** • Common information: - • Individual information: - **■Diagnostic timing** • At power-on/At reset	Write the intelligent function module parameter to the parameter-valid drive, and power on the system again or reset the CPU module. If the same error occurs, the cause is a hardware failure. Please consult your local Mitsubishi representative.	RUN: Off ERR.:Flashing CPU Status:Stop	Qn(H) QnPH QnPRH
3042	**[PARAMETER ERROR]** The system file that have stored the remote password setting information is damaged. **■Collateral information** • Common information: - • Individual information: - **■Diagnostic timing** • At power-on/At reset	• Write the parameters configured in "PLC parameter" and "Network parameter" and remote password to a parameter-valid drive, and power on the system again or reset the CPU module. If the same error occurs, the cause is a hardware failure. Please consult your local Mitsubishi representative. • When a valid drive for parameter is set to other than [program memory], set the parameter file (PARAM) at the boot file setting to be able to transmit to the program memory. Write the parameters configured in "PLC parameter" and "Network parameter" and remote password to a parameter-valid drive, and power on the system again or reset the CPU module. If the same error occurs, the cause is a hardware failure. Please consult your local Mitsubishi representative.	RUN: Off ERR.:Flashing CPU Status:Stop	Qn(H) QnPH QnPRH

Error code	Error and cause	Corrective action	LED status, CPU status	Corresponding CPU
3100	**[LINK PARA. ERROR]** In a multiple CPU system, the CC-Link IE module controlled by another CPU is specified as the start I/O number of the CC-Link IE module. **■Collateral information** • Common information: File name/Drive name • Individual information: Parameter number **■Diagnostic timing** • At power-on/At reset/STOP → RUN	• Delete the network parameter of the CC-Link IE module controlled by another CPU. • Change the setting to the start I/O number of the CC-Link IE module controlled by host CPU.	RUN: Off ERR.:Flashing CPU Status:Stop	Qn(H) QnPRH QnU
	[LINK PARA. ERROR] The network parameter of the CC-Link IE operating as the normal station is overwritten to the control station. Alternatively, the network parameter for the CC-Link IE module that is operating as a normal station has been changed to the control station. (The network parameter is updated on the module by resetting.) **■Collateral information** • Common information: File name/Drive name • Individual information: Parameter number **■Diagnostic timing** • At power-on/At reset/STOP → RUN	Reset the CPU module.		Qn(H) QnPH QnPRH QnU LCPU
	[LINK PARA. ERROR] • The number of modules actually mounted is different from that is set in Network parameter for the CC-Link IE module. • The start I/O number of the actually mounted module is different from the one set in the network parameter of the CC-Link IE. • Parameter-set data cannot be used. • The network type of CC-Link IE is overwritten during power-on. (When changing the network type, switch RESET to RUN.) **■Collateral information** • Common information: File name/Drive name • Individual information: Parameter number **■Diagnostic timing** • At power-on/At reset/STOP → RUN	• Check the network parameters and actual mounting status, and if they differ, make them matched. If any of the network parameters is corrected, write it to the CPU module. • Check the set number of extension base units. • Check the connection status of the extension base units and extension cables. Check the connection of the GOT if it is bus-connected to the main base unit or extension base unit. If an error occurs even after taking the above measures, the cause is a hardware failure. Please consult your local Mitsubishi representative.		

Error code	Error and cause	Corrective action	LED status, CPU status	Corresponding CPU
3100	**[LINK PARA. ERROR]** • The CC-Link IE module is specified for the start I/O number of network parameter in the MELSECNET/H. • The MELSECNET/H module is specified for the start I/O number of network parameter in the CC-Link IE. **■Collateral information** • Common information: File name/Drive name • Individual information: Parameter number **■Diagnostic timing** • At power-on/At reset/STOP → RUN	• Check the network parameters and actual mounting status, and if they differ, make them matched. If any of the network parameters is corrected, write it to the CPU module. • Check the set number of extension base units. • Check the connection status of the extension base units and extension cables. Check the connection of the GOT if it is bus-connected to the main base unit or extension base unit. If an error occurs even after taking the above measures, the cause is a hardware failure. Please consult your local Mitsubishi representative.	RUN: Off ERR.:Flashing CPU Status:Stop	Qn(H) QnPH QnPRH QnU
	[LINK PARA. ERROR] • Although the CC-Link IE module is mounted, network parameter for the CC-Link IE module is not set. • Although the CC-Link IE and MELSECNET/H modules are mounted, network parameter for the MELSECNET/H module is not set. **■Collateral information** • Common information: File name/Drive name • Individual information: Parameter number **■Diagnostic timing** • At power-on/At reset/STOP → RUN	• Check the network parameters and actual mounting status, and if they differ, make them matched. If any of the network parameters is corrected, write it to the CPU module. • Check the set number of extension base units. • Check the connection status of the extension base units and extension cables. Check the connection of the GOT if it is bus-connected to the main base unit or extension base unit. If an error occurs even after taking the above measures, the cause is a hardware failure. Please consult your local Mitsubishi representative.		Qn(H) QnPH QnPRH QnU
	[LINK PARA. ERROR] • Although the CC-Link IE module is mounted, network parameter for the CC-Link IE module is not set. **■Collateral information** • Common information: File name/Drive name • Individual information: Parameter number **■Diagnostic timing** • At power-on/At reset/STOP → RUN	• Check the network parameters and actual mounting status, and if they differ, make them matched. If any of the network parameters is corrected, write it to the CPU module. If an error occurs even after taking the above measures, the cause is a hardware failure. Please consult your local Mitsubishi representative.		LCPU
	[LINK PARA. ERROR] In a multiple CPU system, the MELSECNET/H under control of another CPU is specified as the start I/O number in the network setting parameter of the MELSECNET/H. **■Collateral information** • Common information: File name/Drive name • Individual information: Parameter number **■Diagnostic timing** • At power-on/At reset/STOP → RUN	• Delete the MELSECNET/H network parameter of the MELSECNET/H under control of another CPU. • Change the setting to the start I/O number of the MELSECNET/H under control of the host CPU.		Q00/Q01 Qn(H) QnPH QnU

Error code	Error and cause	Corrective action	LED status, CPU status	Corresponding CPU
3100	**[LINK PARA. ERROR]** The network parameter of the MELSECNET/H operating as the normal station is overwritten to the control station. Or, the network parameter of the MELSECNET/H operating as the control station is overwritten to the normal station. (The network parameter is updated on the module by resetting.) **■Collateral information** • Common information: File name/Drive name • Individual information: Parameter number **■Diagnostic timing** • At power-on/At reset/STOP → RUN	Reset the CPU module.	RUN: Off ERR.:Flashing CPU Status:Stop	Qn(H) QnPH QnPRH QnU
	[LINK PARA. ERROR] • The number of modules actually mounted is different from that is set in Network parameter for MELSECNET/H. • The start I/O number of actually installed modules is different from that designated in the network parameter of MELSECNET/H. • Parameter-set data cannot be used. • The network type of MELSECNET/H is overwritten during power-on. (When changing the network type, switch RESET to RUN.) • The mode switch of MELSECNET/H module is outside the range. **■Collateral information** • Common information: File name/Drive name • Individual information: Parameter number **■Diagnostic timing** • At power-on/At reset/STOP → RUN	• Check the network parameters and actual mounting status, and if they differ, make them matched. If any of the network parameters is corrected, write it to the CPU module. • Check the set number of extension base units. • Check the connection status of the extension base units and extension cables. Check the connection of the GOT if it is bus-connected to the main base unit or extension base unit. • Set the mode switch of MELSECNET/H module within the range. If an error occurs even after taking the above measures, the cause is a hardware failure. Please consult your local Mitsubishi representative.		QCPU
	[LINK PARA. ERROR] A CC-Link IE module with a version that does not support items set in the network parameter is mounted/connected. **■Collateral information** • Common information: File name/Drive name • Individual information: Parameter number **■Diagnostic timing** • At power-on/At reset/STOP → RUN	• Read the individual information of the error using the programming tool to identify the numeric value (parameter No.). Check the parameters corresponding to the value, and correct them as necessary. • Mount/connect a CC-Link IE module with a version that supports items set in the network parameter.		QnU LCPU

Error code	Error and cause	Corrective action	LED status, CPU status	Corresponding CPU
3101	**[LINK PARA. ERROR]** The link refresh range exceeded the file register capacity. **■Collateral information** • Common information: File name/Drive name • Individual information: Parameter number **■Diagnostic timing** • When an END instruction or a COM instruction executed	• Change the file register file for the one that the entire target range can be refreshed. • Increase the capacity of the file register, or reduce the link refresh range.	RUN: Off ERR.:Flashing CPU Status:Stop	Qn(H) QnPH QnPRH QnU LCPU
	[LINK PARA. ERROR] • When the station number of the MELSECNET/H module is 0, the PLC-to-PLC network parameter has been set. • When the station number of the MELSECNET/H module is other than 0, the remote master parameter setting has been made. **■Collateral information** • Common information: File name/Drive name • Individual information: Parameter number **■Diagnostic timing** • At power-on/At reset/STOP → RUN	Correct the type or station number of the MELSECNET/H module in the network parameter to meet the used system.		Qn(H) QnPH QnPRH QnU
	[LINK PARA. ERROR] The refresh parameter for the CC-Link IE module is outside the range. **■Collateral information** • Common information: File name/Drive name • Individual information: Parameter number **■Diagnostic timing** • At power-on/At reset/STOP → RUN	Set the refresh parameter within the range of device setting.		Qn(H) QnPH QnPRH QnU LCPU
	[LINK PARA. ERROR] • The refresh parameter of MELSECNET/H and MELSECNET/10 is outside the setting range. • The setting of the network refresh range crosses over the boundary between the internal user device and the extended data register (D) or extended link register (W). **■Collateral information** • Common information: File name/Drive name • Individual information: Parameter number **■Diagnostic timing** • At power-on/At reset/STOP → RUN	• Set the refresh parameter within the range of device setting. • Set the network refresh range so that it does not cross over the boundary between the internal user device and the extended data register (D) or extended link register (W).		QCPU
	[LINK PARA. ERROR] A multi-remote I/O network was configured using a module that does not support the MELSECNET/H multi-remote I/O network. **■Collateral information** • Common information: File name/Drive name • Individual information: Parameter number **■Diagnostic timing** • At power-on/At reset/STOP → RUN	Use a module that supports the MELSECNET/H multi-remote I/O network.		QnPH
	[LINK PARA. ERROR] • The system A of the MELSECNET/H remote master station has been set to other than Station No. 0. • The system B of the MELSECNET/H remote master station has been set to Station No. 0. **■Collateral information** • Common information: File name/Drive name • Individual information: Parameter number **■Diagnostic timing** • At power-on/At reset/STOP → RUN	• Set the system A of the MELSECNET/H remote master station to Station No. 0. • Set the system B of the MELSECNET/H remote master station to any of Station No. 1 to 64.		QnPRH

<table>
<tr><th>Error code</th><th>Error and cause</th><th>Corrective action</th><th>LED status, CPU status</th><th>Corresponding CPU</th></tr>
<tr><td rowspan="2">3101</td><td>[LINK PARA. ERROR]
Since the number of points of the B/W device set in [Device] of the PLC parameter is lower than the number of B/W refresh device points shown in the following table when parameters of the MELSECNET/H are not set, the refresh between the CPU module and the MELSECNET/H cannot be performed.
<table><tr><th colspan="2">Refresh device</th><th>No. of refresh device points of B device</th><th>No. of refresh device points of W device</th></tr><tr><td rowspan="4">No. of mounted network modules</td><td>1</td><td>8192 points
(8192 points×1 module)</td><td>8192 points
(8192 points×1 module)</td></tr><tr><td>2</td><td>8192 points
(4096 points×2 modules)</td><td>8192 points
(4096 points×2 modules)</td></tr><tr><td>3</td><td>6144 points
(2048 points×3 modules)</td><td>6144 points
(2048 points×3 modules)</td></tr><tr><td>4</td><td>8192 points
(2048 points×4 modules)</td><td>8192 points
(2048 points×4 modules)</td></tr></table>■Collateral information
• Common information: File name/Drive name
• Individual information: Parameter number
■Diagnostic timing
• At power-on/At reset/STOP → RUN</td><td>Set the refresh parameter of the MELSECNET/H in accordance with the number of points of B/W devices set in [Device] of the PLC parameter.</td><td rowspan="2">RUN: Off
ERR.:Flashing

CPU Status:Stop</td><td>Qn(H)
QnPH
QnPRH
QnU</td></tr>
<tr><td>[LINK PARA. ERROR]
The setting of the network refresh range crosses over the boundary between the internal user device and the extended data register (D) or extended link register (W).
■Collateral information
• Common information: File name/Drive name
• Individual information: Parameter number
■Diagnostic timing
• At power-on/At reset/STOP → RUN</td><td>Set the network refresh range so that it does not cross over the boundary between the internal user device and the extended data register (D) or extended link register (W).</td><td>QnU
LCPU</td></tr>
</table>

Error code	Error and cause	Corrective action	LED status, CPU status	Corresponding CPU
3102	**[LINK PARA. ERROR]** A CC-Link IE module parameter error was detected. **■Collateral information** • Common information: File name/Drive name • Individual information: Parameter number **■Diagnostic timing** • At power-on/At reset/STOP → RUN	• Correct and write the network parameters. • If an error occurs again even after it is corrected, the cause is a hardware failure. Please consult your local Mitsubishi representative.	RUN: Off ERR.:Flashing CPU Status:Stop	Qn(H) QnPH QnPRH QnU LCPU
	[LINK PARA. ERROR] • The network module detected a network parameter error. • A MELSECNET/H network parameter error was detected. **■Collateral information** • Common information: File name/Drive name • Individual information: Parameter number **■Diagnostic timing** • At power-on/At reset/STOP → RUN			QCPU
	[LINK PARA. ERROR] The station No. specified in pairing setting are not correct. • The stations are not numbered consecutively. • Pairing setting has not been made for the CPU module at the normal station. **■Collateral information** • Common information: File name/Drive name • Individual information: Parameter number **■Diagnostic timing** • At power-on/At reset/STOP → RUN	Refer to the troubleshooting of the network module, and if the error is due to incorrect pairing setting, reexamine the pairing setting of the network parameter.		QnPRH
	[LINK PARA. ERROR] The CC-Link IE Controller Network module whose first 5 digits of serial No. is "09041" or earlier is mounted. **■Collateral information** • Common information: File name/Drive name • Individual information: Parameter number **■Diagnostic timing** • At power-on/At reset/STOP → RUN	Mount the CC-Link IE Controller Network module whose first 5 digits of serial No. is "09042" or later.		
	[LINK PARA. ERROR] • Different network types are set between the control station and the normal station (CC IE Control Ext. Mode/Normal Mode). • The parameter in which "CC IE Control Ext. Mode" is set for "Network Type" was transferred to the CPU module that does not support the send points expansion function. • The parameter in which "CC IE Control Ext. Mode" is set was backed up to a memory card or GOT and then restored to the CPU module that does not support the send points expansion function. **■Collateral information** • Common information: File name/Drive name • Individual information: Parameter number **■Diagnostic timing** • At power-on/At reset/STOP → RUN	• Set the same network type (CC IE Control Ext. Mode/Normal Mode) for the control station and the normal station. • Do not use the parameter in which "CC IE Control Ext. Mode" is set for "Network Type" for the CPU module that does not support the send points expansion function. Or, use the CPU module and the CC-Link IE Controller Network module that support the send points expansion function in the same network.		QnU

Error code	Error and cause	Corrective action	LED status, CPU status	Corresponding CPU
3102	**[LINK PARA. ERROR]** Group cyclic function in CC-Link IE Controller Network that does not correspond to group cyclic function is set. **■Collateral information** • Common information: File name/Drive name • Individual information: Parameter number **■Diagnostic timing** • At power-on/At reset/STOP → RUN	Set group cyclic function in function version D or later of CC-Link IE Controller Network.	RUN: Off ERR.:Flashing CPU Status:Stop	QnU
	[LINK PARA. ERROR] Pairing setting in CC-Link IE Controller Network modules installed in CPUs except for redundant CPUs was performed. **■Collateral information** • Common information: File name/Drive name • Individual information: Parameter number **■Diagnostic timing** • At power-on/At reset/STOP → RUN	Examine the pairing setting for the network parameter in the control station.	RUN: Off ERR.:Flashing CPU Status:Stop	Q00J/Q00/Q01 Qn(H) QnPH QnU
	[LINK PARA. ERROR] A CC-Link IE module with a version that does not support items set in the network parameter is mounted/connected. **■Collateral information** • Common information: File name/Drive name • Individual information: Parameter number **■Diagnostic timing** • At power-on/At reset/STOP → RUN	• Correct and write the network parameters. • Mount/connect a CC-Link IE module with a version that supports items set in the network parameter.	RUN: Off ERR.:Flashing CPU Status:Stop	QnU
	[LINK PARA. ERROR] • LB/LW own station send range at LB/LW4000 or later was set. • LB/LW setting (2) was performed. **■Collateral information** • Common information: File name/Drive name • Individual information: Parameter number **■Diagnostic timing** • At power-on/At reset/STOP → RUN	Correct the network range assignments of the network parameter for the control station.	RUN: Off ERR.:Flashing CPU Status:Stop	Q00J/Q00/Q01

Error code	Error and cause	Corrective action	LED status, CPU status	Corresponding CPU
3103	**[LINK PARA. ERROR]** In a multiple CPU system, Ethernet interface module under control of another station is specified to the start I/O number of the Ethernet network parameter. **■Collateral information** • Common information: File name/Drive name • Individual information: Parameter number **■Diagnostic timing** • At power-on/At reset/STOP → RUN	• Delete the Ethernet network parameter of Ethernet interface module under control of another station. • Change the setting to the start I/O number of Ethernet interface module under control of the host station.	RUN: Off ERR.:Flashing CPU Status:Stop	Q00/Q01 Qn(H) QnPH QnU
	[LINK PARA. ERROR] • Although the number of modules has been set to one or greater number in the Ethernet module count parameter setting, the number of actually mounted module is zero. • The start I/O No. of the Ethernet network parameter differs from the I/O No. of the actually mounted module. **■Collateral information** • Common information: File name/Drive name • Individual information: Parameter number **■Diagnostic timing** • At power-on/At reset/STOP → RUN	• Correct and write the network parameters. • If an error occurs again even after it is corrected, the cause is a hardware failure. Please consult your local Mitsubishi representative.		QCPU LCPU
	[LINK PARA. ERROR] • In the redundant system, although "Ethernet (Main base)" is selected for Network type, the Ethernet module is mounted on the extension base unit. • In the redundant system, although "Ethernet (Extension base)" is selected for Network type, the Ethernet module is mounted on the main base unit. **■Collateral information** • Common information: File name/Drive name • Individual information: Parameter number **■Diagnostic timing** • At power-on/At reset/STOP → RUN			QnPRH
3104	**[LINK PARA. ERROR]** • The Ethernet, MELSECNET/H and MELSECNET/10 use the same network number. • The network number, station number or group number set in the network parameter is out of range. • The specified I/O number is outside the range of the used CPU module. • The Ethernet parameter settings are incorrect. **■Collateral information** • Common information: File name/Drive name • Individual information: Parameter number **■Diagnostic timing** • At power-on/At reset/STOP → RUN	• Correct and write the network parameters. • If an error occurs again even after it is corrected, the cause is a hardware failure. Please consult your local Mitsubishi representative.	RUN: Off ERR.:Flashing CPU Status:Stop	QCPU
	[LINK PARA. ERROR] • The network number, station number or group number of the Ethernet module set in the network parameter is out of range. • The start I/O number of the Ethernet module set in the network parameter is out of range. • The Ethernet parameter settings are incorrect. **■Collateral information** • Common information: File name/Drive name • Individual information: Parameter number **■Diagnostic timing** • At power-on/At reset/STOP → RUN			LCPU

Error code	Error and cause	Corrective action	LED status, CPU status	Corresponding CPU
3105	**[LINK PARA. ERROR]** In a multiple CPU system, the CC-Link module under control of another station is specified as the start I/O number of the CC-Link network parameter. **■Collateral information** • Common information: File name/Drive name • Individual information: Parameter number **■Diagnostic timing** • At power-on/At reset/STOP → RUN	• Delete the CC-Link network parameter of the CC-Link module under control of another station. • Change the setting to the start I/O number of the CC-Link module under control of the host station.	RUN: Off ERR.:Flashing CPU Status:Stop	Q00/Q01 Qn(H) QnPH QnU
	[LINK PARA. ERROR] • Although one or more CC-Link modules were configured in "Network Parameter", no CC-Link modules are installed in the system. The start I/O number in the common parameters is different from that of the actually mounted module. • The station type of the CC-Link module count setting parameters is different from that of the actually mounted station. **■Collateral information** • Common information: File name/Drive name • Individual information: Parameter number **■Diagnostic timing** • At power-on/At reset/STOP → RUN	• Correct and write the network parameters. • If an error occurs again even after it is corrected, the cause is a hardware failure. Please consult your local Mitsubishi representative.		QCPU L02SCPU L02SCPU-P L02CPU L02CPU-P L06CPU L06CPU-P L26CPU L26CPU-P
	[LINK PARA. ERROR] • Although two or more CC-Link modules were configured in "Network Parameter", only one CC-Link modules are installed in the system. The start I/O number of the common parameter specified in "Network Parameter" does not correspond to the system. • The station type specified in the Network Parameter dialog box for CC-Link does not correspond to the system. **■Collateral information** • Common information: File name/Drive name • Individual information: Parameter number **■Diagnostic timing** • At power-on/At reset/STOP → RUN			L26CPU-BT L26CPU-PBT
	[LINK PARA. ERROR] • CC-Link module whose station type is set to "master station (compatible with redundant function)" is mounted on the extension base unit in the redundant system. • CC-Link module whose station type is set to "master station (extension base)" is mounted on the main base unit in the redundant system. **■Collateral information** • Common information: File name/Drive name • Individual information: Parameter number **■Diagnostic timing** • At power-on/At reset/STOP → RUN	• Correct and write the network parameters. • If an error occurs again even after it is corrected, the cause is a hardware failure. Please consult your local Mitsubishi representative.		QnPRH

Error code	Error and cause	Corrective action	LED status, CPU status	Corresponding CPU
3106	**[LINK PARA. ERROR]** The CC-Link link refresh range exceeded the file register capacity. **■Collateral information** • Common information: File name/Drive name • Individual information: Parameter number **■Diagnostic timing** • At power-on/At reset/STOP → RUN/When an END instruction or a COM instruction executed	Change the file register file for the one that the entire target range can be refreshed.	RUN: Off ERR.:Flashing CPU Status:Stop	Qn(H) QnPH QnPRH QnU LCPU
	[LINK PARA. ERROR] The network refresh parameter for CC-Link is out of range. **■Collateral information** • Common information: File name • Individual information: Parameter number **■Diagnostic timing** • At power-on/At reset/STOP → RUN/When an END instruction or a COM instruction executed	Check the parameter setting.		QCPU LCPU
	[LINK PARA. ERROR] The setting of the network refresh range crosses over the boundary between the internal user device and the extended data register (D) or extended link register (W). **■Collateral information** • Common information: File name • Individual information: Parameter number **■Diagnostic timing** • At power-on/At reset/STOP → RUN	Set the network refresh range so that it does not cross over the boundary between the internal user device and the extended data register (D) or extended link register (W).		QnU LCPU
3107	**[LINK PARA. ERROR]** • The CC-Link parameter setting is incorrect. • The set mode is not allowed for the version of the mounted CC-Link module. **■Collateral information** • Common information: File name • Individual information: Parameter number **■Diagnostic timing** • At power-on/At reset/STOP → RUN	Check the parameter setting.	RUN: Off ERR.:Flashing CPU Status:Stop	QCPU LCPU
3150	**[LINK PARA. ERROR]** • When the CC-Link IE Field Network is used, the network number set in "Network Parameter" and "Switch Setting" is duplicated. • No "Network Parameter" and "Switch Setting" are configured, or the CC-Link IE Field Network module with an incorrect switch setting is mounted. **■Collateral information** • Common information: File name/Drive name • Individual information: Parameter number **■Diagnostic timing** • At power-on/At reset	• Check the parameter setting. • Configure "Network Parameter" and "Switch Setting", and then write network parameters and the switch setting to the module.	RUN: Off ERR.:Flashing CPU Status:Stop	QnU LCPU
3200	**[SFC PARA. ERROR]** • The parameter setting is illegal. • The block 0 does not exist although "Autostart Block 0" was selected in the SFC tab in "PLC Parameter". **■Collateral information** • Common information: File name/Drive name • Individual information: Parameter number **■Diagnostic timing** • STOP → RUN	Read the individual information of the error using the programming tool to identify the numeric value (parameter No.). Check the parameters corresponding to the value, and correct them as necessary.	RUN: Off ERR.:Flashing CPU Status:Stop	Q00J/Q00/Q01 Qn(H) QnPH QnPRH QnU LCPU
3201	**[SFC PARA. ERROR]** The block parameter setting is illegal. **■Collateral information** • Common information: File name • Individual information: Parameter number **■Diagnostic timing** • STOP → RUN	Read the individual information of the error using the programming tool to identify the numeric value (parameter No.). Check the parameters corresponding to the value, and correct them as necessary.	RUN: Off ERR.:Flashing CPU Status:Stop	Qn(H) QnPH QnPRH

Error code	Error and cause	Corrective action	LED status, CPU status	Corresponding CPU
3202	**[SFC PARA. ERROR]** The number of step relays specified in the device setting of "PLC Parameter" is less than that used in the program. **■Collateral information** • Common information: File name • Individual information: Parameter number **■Diagnostic timing** • STOP → RUN	Read the individual information of the error using the programming tool to identify the numeric value (parameter No.). Check the parameters corresponding to the value, and correct them as necessary.	RUN: Off ERR.:Flashing CPU Status:Stop	Qn(H) QnPH QnPRH
3203	**[SFC PARA. ERROR]** Other than "Scan" and "Wait" is set for "Execute Type" in the Program tab of "PLC Parameter". **■Collateral information** • Common information: File name/Drive name • Individual information: Parameter number **■Diagnostic timing** • At power-on/At reset/STOP ⟶ RUN*2	Read the individual information of the error using the programming tool to identify the numeric value (parameter No.). Check the parameters corresponding to the value, and correct them as necessary.	RUN: Off ERR.:Flashing CPU Status:Stop	Qn(H) QnPH QnPRH QnU LCPU
3300	**[SP. PARA ERROR]** The start I/O number in the intelligent function module parameter set on GX Configurator differs from the actual I/O number. **■Collateral information** • Common information: File name/Drive name • Individual information: Parameter number*1 **■Diagnostic timing** • At power-on/At reset/STOP → RUN	Check the parameter setting.	RUN: Off ERR.:Flashing CPU Status:Stop	QCPU LCPU
3301	**[SP. PARA ERROR]** • The refresh setting of the intelligent function module exceeded the file register capacity. • The intelligent function module set in GX Configurator differs from the actually mounted module. **■Collateral information** • Common information: File name/Drive name • Individual information: Parameter number*1 **■Diagnostic timing** • When an END instruction or a COM instruction executed	• Change the file register file for the one that the entire target range can be refreshed. • Check the parameter setting. • Check the auto refresh setting.	RUN: Off ERR.:Flashing CPU Status:Stop	Q00J/Q00/Q01 Qn(H) QnPH QnPRH QnU LCPU
	[SP. PARA ERROR] The intelligent function module's refresh parameter setting is outside the available range. **■Collateral information** • Common information: File name/Drive name • Individual information: Parameter number*1 **■Diagnostic timing** • When an END instruction or a COM instruction executed	• Check the parameter setting. • Check the auto refresh setting.		QCPU LCPU
	[SP. PARA ERROR] The setting of the refresh parameter range crosses over the boundary between the internal user device and the extended data register (D) or extended link register (W). **■Collateral information** • Common information: File name/Drive name • Individual information: Parameter number*1 **■Diagnostic timing** • When an END instruction or a COM instruction executed	Set the refresh parameter range so that it does not cross over the boundary between the internal user device and the extended data register (D) or extended link register (W).		QnU LCPU
3302	**[SP. PARA ERROR]** The intelligent function module's refresh parameter are abnormal. **■Collateral information** • Common information: File name/Drive name • Individual information: Parameter number*1 **■Diagnostic timing** • At power-on/At reset/STOP → RUN	Check the parameter setting.	RUN: Off ERR.:Flashing CPU Status:Stop	QCPU LCPU

Error code	Error and cause	Corrective action	LED status, CPU status	Corresponding CPU
3303	**[SP. PARA ERROR]** In a multiple CPU system, the automatic refresh setting or other parameter setting was made to the intelligent function module under control of another station. **■Collateral information** • Common information: File name/Drive name • Individual information: Parameter number **■Diagnostic timing** • At power-on/At reset/STOP → RUN	• Delete the automatic refresh setting or other parameter setting of the intelligent function module under control of another CPU. • Change the setting to the automatic refresh setting or other parameter setting of the intelligent function module under control of the host CPU.	RUN: Off ERR.:Flashing CPU Status:Stop	Q00/Q01 Qn(H) QnPH QnU
3400	**[REMOTE PASS. ERR.]** The start I/O number of the remote password target module is set to other than 0_H to $0FF0_H$ **■Collateral information** • Common information: - • Individual information: - **■Diagnostic timing** • At power-on/At reset/STOP → RUN	Set the start I/O number within the range, 0_H to $0FF0_H$.	RUN: Off ERR.:Flashing CPU Status:Stop	Qn(H) QnPH QnPRH QnU
	[REMOTE PASS. ERR.] The start I/O number of the remote password target module is set to other than 0_H to $07E0_H$. **■Collateral information** • Common information: - • Individual information: - **■Diagnostic timing** • At power-on/At reset/STOP → RUN	Set the start I/O number within the range, 0_H to $07E0_H$.		Q02UCPU
	[REMOTE PASS. ERR.] The start I/O number of the remote password target module is not in the following range. • Q00JCPU: 0_H to $1E0_H$ • Q00CPU/Q01CPU: 0_H to $3E0_H$ **■Collateral information** • Common information: - • Individual information: - **■Diagnostic timing** • At power-on/At reset/STOP → RUN	Set the start I/O number within the following range. • Q00JCPU: 0_H to $1E0_H$ • Q00CPU/Q01CPU: 0_H to $3E0_H$		Q00J/Q00/Q01
	[REMOTE PASS. ERR.] The start I/O number of the remote password target module is out of range. **■Collateral information** • Common information: - • Individual information: - **■Diagnostic timing** • At power-on/At reset/STOP → RUN	Correct the start I/O number.		LCPU

Error code	Error and cause	Corrective action	LED status, CPU status	Corresponding CPU
3401	**[REMOTE PASS. ERR.]** There is a problem in the slot specified by the start I/O number of the remote password target module: • No module is mounted. • A module (such as I/O module) other than intelligent function modules is mounted. • An intelligent function module other than a serial communication module or Ethernet module is mounted. • The function version of a serial communication module or Ethernet module mounted is A. • An intelligent function module that does not support the use of remote password is mounted. **■Collateral information** • Common information: - • Individual information: - **■Diagnostic timing** • At power-on/At reset/STOP → RUN	Mount the following modules in the slot specified by the start I/O number of the remote password target module. • Serial communication module whose function version B or later • Ethernet module whose function version B or later	RUN: Off ERR.:Flashing CPU Status:Stop	Qn(H) QnPH QnPRH QnU
	[REMOTE PASS. ERR.] There is a problem in the slot specified by the start I/O number of the remote password target module: • No module is mounted. • An intelligent function module other than a serial communication module or Ethernet module is mounted. **■Collateral information** • Common information: - • Individual information: - **■Diagnostic timing** • At power-on/At reset/STOP → RUN	Mount an intelligent function module that supports the use of remote password in the specified slot.		LCPU
	[REMOTE PASS. ERR.] Any of the following modules is not mounted in the slot specified by the start I/O number of the remote password target module. • Serial communication module whose function version B or later • Ethernet module whose function version B or later **■Collateral information** • Common information: - • Individual information: - **■Diagnostic timing** • At power-on/At reset/STOP → RUN	Mount the following modules in the slot specified by the start I/O number of the remote password target module. • Serial communication module whose function version B or later • Ethernet module whose function version B or later		Q00J/Q00/Q01
	[REMOTE PASS. ERR.] Serial communication module or Ethernet module of function version B or later controlled by another CPU was specified in a multiple CPU system. **■Collateral information** • Common information: - • Individual information: - **■Diagnostic timing** • At power-on/At reset/STOP → RUN	• Change it for the Ethernet module of function version B or later connected by the host CPU. • Delete the remote password setting.		Qn(H) QnPH QnU

*1 The parameter No. will be the number obtained by the formula: "start I/O number of the intelligent function module set in parameter using GX Configurator" ÷ 10_H.

*2 The diagnostic timing of CPU modules other than the Universal model QCPU and LCPU is only when the status of the CPU module is switched from STOP to RUN.

Appendix 1.6 List of error codes (4000 to 4999)

The following table shows the error messages, the error contents and causes, and the corrective actions for the error codes (4000 to 4999).

Error code	Error and cause	Corrective action	LED status, CPU status	Corresponding CPU
4000	**[INSTRCT. CODE ERR]** • The program contains an instruction code that cannot be decoded. • An unusable instruction is included in the program. **■Collateral information** • Common information: Program error location • Individual information: - **■Diagnostic timing** • At power-on/At reset/STOP → RUN/When instruction executed • When instruction executed (SFC program)	Read common information of the error using the programming tool to identify the numeric value (program error location). Check the error step corresponding to the value, and correct it as necessary.	RUN: Off ERR.:Flashing CPU Status:Stop	QCPU
	[INSTRCT. CODE ERR] • The program contains an instruction code that cannot be decoded. • An unusable instruction is included in the program. • The number of pointers used exceeds the number of pointers set by the parameter. **■Collateral information** • Common information: Program error location • Individual information: - **■Diagnostic timing** • At power-on/At reset/STOP → RUN/When instruction executed • When instruction executed (SFC program)			LCPU
4001	**[INSTRCT. CODE ERR]** The program contains a dedicated instruction for SFC although it is not an SFC program. **■Collateral information** • Common information: Program error location • Individual information: - **■Diagnostic timing** • At power-on/At reset/STOP → RUN/When instruction executed	Read common information of the error using the programming tool to identify the numeric value (program error location). Check the error step corresponding to the value, and correct it as necessary.	RUN: Off ERR.:Flashing CPU Status:Stop	Q00J/Q00/Q01 Qn(H) QnPH QnPRH QnU LCPU
4002	**[INSTRCT. CODE ERR]** • The name of dedicated instruction specified by the program is incorrect. • The dedicated instruction specified by the program cannot be executed by the specified module. **■Collateral information** • Common information: Program error location • Individual information: - **■Diagnostic timing** • At power-on/At reset/STOP → RUN/When instruction executed • When instruction executed (SFC program)	Read common information of the error using the programming tool to identify the numeric value (program error location). Check the error step corresponding to the value, and correct it as necessary.	RUN: Off ERR.:Flashing CPU Status:Stop	QCPU LCPU
4003	**[INSTRCT. CODE ERR]** The number of devices for the dedicated instruction specified by the program is incorrect. **■Collateral information** • Common information: Program error location • Individual information: - **■Diagnostic timing** • At power-on/At reset/STOP → RUN/When instruction executed • When instruction executed (SFC program)	Read common information of the error using the programming tool to identify the numeric value (program error location). Check the error step corresponding to the value, and correct it as necessary.	RUN: Off ERR.:Flashing CPU Status:Stop	QCPU LCPU

Error code	Error and cause	Corrective action	LED status, CPU status	Corresponding CPU
4004	**[INSTRCT. CODE ERR]** The device which cannot be used by the dedicated instruction specified by the program is specified. **■Collateral information** • Common information: Program error location • Individual information: - **■Diagnostic timing** • At power-on/At reset/STOP → RUN/When instruction executed • When instruction executed (SFC program)	Read common information of the error using the programming tool to identify the numeric value (program error location). Check the error step corresponding to the value, and correct it as necessary.	RUN: Off ERR.:Flashing CPU Status:Stop	QCPU LCPU
4010	**[MISSING END INS.]** There is no END (FEND) instruction in the program. **■Collateral information** • Common information: Program error location • Individual information: - **■Diagnostic timing** • At power-on/At reset/STOP → RUN	Read common information of the error using the programming tool to identify the numeric value (program error location). Check the error step corresponding to the value, and correct it as necessary.	RUN: Off ERR.:Flashing CPU Status:Stop	QCPU LCPU
4020	**[CAN'T SET(P)]** • The total points of the pointers used in the program exceeded 4096 points. • The total points of the local pointers used in the program exceeded the start number of the common pointer. **■Collateral information** • Common information: Program error location • Individual information: - **■Diagnostic timing** • At power-on/At reset/STOP → RUN	Read common information of the error using the programming tool to identify the numeric value (program error location). Check the error step corresponding to the value, and correct it as necessary.	RUN: Off ERR.:Flashing CPU Status:Stop	Qn(H) QnPH QnPRH QnU LCPU
	[CAN'T SET(P)] • The total points of the pointers used in the program exceeded 512 points. • The total points of the local pointers used in the program exceeded the start number of the common pointer. **■Collateral information** • Common information: Program error location • Individual information: - **■Diagnostic timing** • At power-on/At reset/STOP → RUN			Q00UJ/Q00U/Q01U
4021	**[CAN'T SET(P)]** The same pointer number is assigned to common pointers or local pointers assigned to each file. **■Collateral information** • Common information: Program error location • Individual information: - **■Diagnostic timing** • At power-on/At reset/STOP → RUN	Read common information of the error using the programming tool to identify the numeric value (program error location). Check the error step corresponding to the value, and correct it as necessary.	RUN: Off ERR.:Flashing CPU Status:Stop	QCPU LCPU
4030	**[CAN'T SET(I)]** The allocation pointer Nos. assigned by files overlap. **■Collateral information** • Common information: Program error location • Individual information: - **■Diagnostic timing** • At power-on/At reset/STOP → RUN	Read common information of the error using the programming tool to identify the numeric value (program error location). Check the error step corresponding to the value, and correct it as necessary.	RUN: Off ERR.:Flashing CPU Status:Stop	QCPU LCPU

Error code	Error and cause	Corrective action	LED status, CPU status	Corresponding CPU
4100	**[OPERATION ERROR]** The instruction cannot process the contained data. **■Collateral information** • Common information: Program error location • Individual information: - **■Diagnostic timing** • When instruction executed	Read common information of the error using the programming tool to identify the numeric value (program error location). Check the error step corresponding to the value, and correct it as necessary.	RUN: Off/On ERR.:Flashing/On CPU Status: Stop/Continue*1	QCPU LCPU
	[OPERATION ERROR] An error has occurred in access to the ATA or SD memory card using an instruction. **■Collateral information** • Common information: Program error location • Individual information: - **■Diagnostic timing** • When instruction executed	• Take noise reduction measures. • Reset the CPU module and run it again. If the same error code is displayed again, the cause is a hardware failure of the ATA card or SD memory card. Please consult your local Mitsubishi representative.		Qn(H) QnPH QnPRH QnU LCPU
	[OPERATION ERROR] • The file being accessed was accessed with the SP.FWRITE instruction. • Writing was attempted to the write-protected SD memory card with the SP.FWRITE instruction. **■Collateral information** • Common information: Program error location • Individual information: - **■Diagnostic timing** • When instruction executed	• Do not execute the SP.FWRITE instruction to the file being accessed. • Do not execute any other function and the SP.FWRITE instruction at the same time. • Disable the write protect switch of the SD memory card.		QnU LCPU

Error code	Error and cause	Corrective action	LED status, CPU status	Corresponding CPU
4101	**[OPERATION ERROR]** • The number of setting data dealt with the instruction exceeds the applicable range. • The storage data and constant of the device specified by the instruction exceeds the applicable range. • When writing to the host CPU shared memory, the write prohibited area is specified for the write destination address. • The range of storage data of the device specified by the instruction is duplicated. • The device specified by the instruction exceeds the range of the number of device points. • The interrupt pointer No. specified by the instruction exceeds the applicable range. • A link direct device, intelligent function module device, and cyclic transmission area device are specified for both (S) and (D) with the BMOV instruction. • The target station's network No. specified by the network dedicated instruction does not exist. • There are no link direct devices (J□\□) **■Collateral information** • Common information: Program error location • Individual information: - **■Diagnostic timing** • When instruction executed	Read common information of the error using the programming tool to identify the numeric value (program error location). Check the error step corresponding to the value, and correct it as necessary.	RUN: Off/On ERR.:Flashing/On CPU Status: Stop/Continue*1	QCPU LCPU
	[OPERATION ERROR] • Data stored in the file register specified by an instruction exceeds the applicable range. • A file register has not been set. Or the set file register does not store a file. **■Collateral information** • Common information: Program error location • Individual information: - **■Diagnostic timing** • When instruction executed			
	[OPERATION ERROR] • The block data that crosses over the boundary between the internal user device and the extended data register (D) or extended link register is specified (including 32-bit binary, real number (single precision, double precision), indirect address, and control data). **■Collateral information** • Common information: Program error location • Individual information: - **■Diagnostic timing** • When instruction executed	Read common information of the error using the programming tool to identify the numeric value (program error location). Check the error step corresponding to the value, and correct it as necessary.		QnU LCPU

Error code	Error and cause	Corrective action	LED status, CPU status	Corresponding CPU
4102	**[OPERATION ERROR]** In a multiple CPU system, the link direct device (J□\□) was specified for the network module under control of another station. **■Collateral information** • Common information: Program error location • Individual information: - **■Diagnostic timing** • When instruction executed	• Delete from the program the link direct device which specifies the network module under control of another CPU. • Using the link direct device, specify the network module controlled by the own station.	RUN: Off/On ERR.:Flashing/On CPU Status: Stop/Continue*1	Q00/Q01 Qn(H) QnPH QnU
	[OPERATION ERROR] • The module No./network No. /station No. specified for the dedicated instruction is wrong. • The link direct device (J□\□) setting is incorrect. • The module No./network No./number of character strings exceeds the range that can be specified. **■Collateral information** • Common information: Program error location • Individual information: - **■Diagnostic timing** • When instruction executed	Read common information of the error using the programming tool to identify the numeric value (program error location). Check the error step corresponding to the value, and correct it as necessary.		QCPU LCPU
	[OPERATION ERROR] The character string (" ") specified by a dedicated instruction cannot be used for the character string. **■Collateral information** • Common information: Program error location • Individual information: - **■Diagnostic timing** • When instruction executed			QnU LCPU
4103	**[OPERATION ERROR]** The configuration of the PID dedicated instruction is incorrect. **■Collateral information** • Common information: Program error location • Individual information: - **■Diagnostic timing** • When instruction executed	Read common information of the error using the programming tool to identify the numeric value (program error location). Check the error step corresponding to the value, and correct it as necessary.	RUN: Off/On ERR.:Flashing/On CPU Status: Stop/Continue*1	Q00J/Q00/Q01 Qn(H) QnPRH QnU LCPU
4105	**[OPERATION ERROR]** PLOADP/PUNLOADP/PSWAPP instructions were executed while setting program memory check. **■Collateral information** • Common information: Program error location • Individual information: - **■Diagnostic timing** • When instruction executed	• Delete the setting for the program memory check. • When using the program memory check, delete PLOADP/PUNLOADP/PSWAPP instructions.	RUN: Off/On ERR.:Flashing/On CPU Status: Stop/Continue	QnPH
4107	**[OPERATION ERROR]** 33 or more multiple CPU dedicated instructions were executed from one CPU module. **■Collateral information** • Common information: Program error location • Individual information: - **■Diagnostic timing** • When instruction executed	Using the multiple CPU dedicated instruction completion bit, provide interlocks to prevent one CPU module from executing 33 or more multiple CPU dedicated instructions.	RUN: Off/On ERR.:Flashing/On CPU Status: Stop/Continue*1	Q00/Q01 Qn(H) QnPH Q00UCPU Q01UCPU Q02UCPU QnUDV QnUDPV
4109	**[OPERATION ERROR]** With high speed interrupt setting PR, PRC, UDCNT1, UDCNT2, PLSY or PWM instruction is executed. **■Collateral information** • Common information: Program error location • Individual information: - **■Diagnostic timing** • When instruction executed	Delete the high-speed interrupt setting. When using high-speed interrupt, delete the PR, PRC, UDCNT1, UDCNT2, PLSY and PWM instructions.	RUN: Off/On ERR.:Flashing/On CPU Status: Stop/Continue*1	Qn(H)*2

Error code	Error and cause	Corrective action	LED status, CPU status	Corresponding CPU
4111	**[OPERATION ERROR]** An attempt was made to perform write/read to/from the CPU shared memory write/read disable area of the own station CPU module with the instruction. **■Collateral information** • Common information: Program error location • Individual information: - **■Diagnostic timing** • When instruction executed	Read common information of the error using the programming tool to identify the numeric value (program error location). Check the error step corresponding to the value, and correct it as necessary.	RUN: Off/On ERR.:Flashing/On CPU Status: Stop/Continue*1	Q00/Q01 QnU
4112	**[OPERATION ERROR]** The CPU module that cannot be specified with the multiple CPU dedicated instruction was specified. **■Collateral information** • Common information: Program error location • Individual information: - **■Diagnostic timing** • When instruction executed	Read common information of the error using the programming tool to identify the numeric value (program error location). Check the error step corresponding to the value, and correct it as necessary.	RUN: Off/On ERR.:Flashing/On CPU Status: Stop/Continue*1	Q00/Q01 QnU
4113	**[OPERATION ERROR]** • When the SP.DEVST instruction is executed, the number of writing to the standard ROM of the day exceeds the value specified by SD695. • The value outside the specified range is set to SD695. **■Collateral information** • Common information: Program error location • Individual information: - **■Diagnostic timing** • When instruction executed	• Check that the number of execution of the SP.DEVST instruction is proper. • Execute the SP.DEVST instruction again on or after the following day. Or change the value in SD695. • Correct the value of SD695 so that it does not exceed the range.	RUN: Off/On ERR.:Flashing/On CPU Status: Stop/Continue	QnU LCPU
4116	**[OPERATION ERROR]** A built-in I/O instruction that is disabled with a parameter was executed. **■Collateral information** • Common information: Program error location • Individual information: - **■Diagnostic timing** • When instruction executed	• Enable the built-in I/O function with parameters. • Prohibit executions of a built-in I/O instruction that is disabled with a parameter.	RUN: Off/On ERR.:Flashing/On CPU Status: Stop/Continue	LCPU
4120	**[OPERATION ERROR]** Since the manual system switching enable flag (SM1592) is off, a manual system switching cannot be executed by the control system switching instruction (SP. CONTSW). **■Collateral information** • Common information: Program error location • Individual information: - **■Diagnostic timing** • When instruction executed	To execute control system switching by the SP. CONTSW instruction, turn on the manual system switching enable flag (SM1592).	RUN: Off/On ERR.:Flashing/On CPU Status: Stop/Continue*1	QnPRH
4121	**[OPERATION ERROR]** • In the separate mode, the control system switching instruction (SP. CONTSW) was executed in the standby system CPU module. • In the debug mode, the control system switching instruction (SP. CONTSW) was executed. **■Collateral information** • Common information: Program error location • Individual information: - **■Diagnostic timing** • When instruction executed	• Reexamine the interlock signal for the SP. CONTSW instruction, and make sure that the SP. CONTSW instruction is executed in the control system only. (Since the SP. CONTSW instruction cannot be executed in the standby system, it is recommended to provide an interlock using the operation mode signal or like.) • As the SP. CONTSW instruction cannot be executed in the debug mode, reexamine the interlock signal related to the operation mode.	RUN: Off/On ERR.:Flashing/On CPU Status: Stop/Continue*1	QnPRH

Error code	Error and cause	Corrective action	LED status, CPU status	Corresponding CPU
4122	**[OPERATION ERROR]** • The dedicated instruction was executed to the module mounted on the extension base unit in the redundant system. • The instruction for accessing the intelligent function module mounted on the extension base unit from the standby system at separate mode was executed. **■Collateral information** • Common information: Program error location • Individual information: - **■Diagnostic timing** • When instruction executed	• Delete the dedicated instruction for the module mounted on the extension base unit. • Delete the instruction for accessing the intelligent function module mounted on the extension base unit from the standby system.	RUN: Off/On ERR.:Flashing/On CPU Status: Stop/Continue	QnPRH
4130	**[OPERATION ERROR]** Instructions to read SFC step comment (S(P).SFCSCOMR) and SFC transition condition comment (S(P).SFCTCOMR) are executed for the comment file in the ATA card or SD memory card. **■Collateral information** • Common information: Program error location • Individual information: - **■Diagnostic timing** • When instruction executed/When an END instruction executed	Set the comment file used in the instructions to the one not in the ATA card or SD memory card.	RUN: Off/On ERR.:Flashing/On CPU Status: Stop/Continue	Qn(H) QnPH QnPRH QnU
4131	**[OPERATION ERROR]** The SFC program is started up by the instruction while the other SFC program has not yet been completed. **■Collateral information** • Common information: Program error location • Individual information: - **■Diagnostic timing** • When instruction executed	Check the SFC program specified by the instruction. Or, check the executing status of the SFC program.	RUN: Off/On ERR.:Flashing/On CPU Status: Stop/Continue	QnU LCPU
4140	**[OPERATION ERROR]** An Operation was performed with special values of input data (-0, subnormal number, NaN (not a number), ±∞) is performed. **■Collateral information** • Common information: Program error location • Individual information: - **■Diagnostic timing** • When instruction executed	Read common information of the error using the programming tool to identify the numeric value (program error location). Check the error step corresponding to the value, and correct it as necessary.	RUN: Off/On ERR.:Flashing/On CPU Status: Stop/Continue	QnU LCPU
4141	**[OPERATION ERROR]** • An overflow occurs during operation. • An error occurs during operation. **■Collateral information** • Common information: Program error location • Individual information: - **■Diagnostic timing** • When instruction executed	Read common information of the error using the programming tool to identify the numeric value (program error location). Check the error step corresponding to the value, and correct it as necessary.	RUN: Off/On ERR.:Flashing/On CPU Status: Stop/Continue	QnU LCPU
4150	**[OPERATION ERROR]** • The start I/O number of the module on the station that cannot be specified using an instruction has been specified. • A start I/O number not set in the network parameter has been specified using an instruction. **■Collateral information** • Common information: Program error location • Individual information: - **■Diagnostic timing** • When instruction executed	• Specify the start I/O number of the module on the master station. • Specify the start I/O number set in the network parameter. • Change the network parameter setting.	RUN: Off/On ERR.:Flashing/On CPU Status: Stop/Continue	QnU LCPU

Error code	Error and cause	Corrective action	LED status, CPU status	Corresponding CPU
4151	**[OPERATION ERROR]** • The refresh device of the module specified using an instruction is not assigned in the network parameter. • The number of device points specified using an instruction exceeds the range for one transfer setting assigned in the network parameter. **■Collateral information** • Common information: Program error location • Individual information: - **■Diagnostic timing** • When instruction executed	• Read common information of the error using the programming tool to identify the numeric value (program error location). Check the error step corresponding to the value, and correct it as necessary. • Change the network parameter setting.	RUN: Off/On ERR.:Flashing/On CPU Status: Stop/Continue	QnU LCPU
4160	**[OPERATION ERROR]** A built-in Ethernet function instruction cannot be executed. **■Collateral information** • Common information: Program error location • Individual information: - **■Diagnostic timing** • When instruction executed	• Check and correct the built-in Ethernet port setting parameters. • Do not execute any unsupported built-in Ethernet function instruction.	RUN: Off/On ERR.:Flashing/On CPU Status: Stop/Continue	LCPU
4161	**[OPERATION ERROR]** The SP.SLMPSND instruction was executed when the simple PLC communication function was set in "PLC Parameter". **■Collateral information** • Common information: Program error location • Individual information: - **■Diagnostic timing** • When instruction executed	• Do not use the simple PLC communication function. • Do not execute the SP.SLMPSND instruction.	RUN: Off/On ERR.:Flashing/On CPU Status: Stop/Continue	QnUDV QnUDPV LCPU
4200	**[FOR-NEXT ERROR]** The NEXT instruction was not executed although a FOR instruction has been executed. Alternatively, there are fewer NEXT instructions than FOR instructions. **■Collateral information** • Common information: Program error location • Individual information: - **■Diagnostic timing** • When instruction executed	Read common information of the error using the programming tool to identify the numeric value (program error location). Check the error step corresponding to the value, and correct it as necessary.	RUN: Off ERR.:Flashing CPU Status:Stop	QCPU LCPU
4201	**[FOR-NEXT ERROR]** The NEXT instruction was executed although no FOR instruction has been executed. Alternatively, there are more NEXT instructions than FOR instructions. **■Collateral information** • Common information: Program error location • Individual information: - **■Diagnostic timing** • When instruction executed	Read common information of the error using the programming tool to identify the numeric value (program error location). Check the error step corresponding to the value, and correct it as necessary.	RUN: Off ERR.:Flashing CPU Status:Stop	QCPU LCPU
4202	**[FOR-NEXT ERROR]** More than 16 nesting levels of the FOR instruction are programmed. **■Collateral information** • Common information: Program error location • Individual information: - **■Diagnostic timing** • When instruction executed	Keep nesting levels at 16 or under.	RUN: Off ERR.:Flashing CPU Status:Stop	QCPU LCPU
4203	**[FOR-NEXT ERROR]** A BREAK instruction was executed although no FOR instruction has been executed prior to that. **■Collateral information** • Common information: Program error location • Individual information: - **■Diagnostic timing** • When instruction executed	Read common information of the error using the programming tool to identify the numeric value (program error location). Check the error step corresponding to the value, and correct it as necessary.	RUN: Off ERR.:Flashing CPU Status:Stop	QCPU LCPU

Error code	Error and cause	Corrective action	LED status, CPU status	Corresponding CPU
4210	**[CAN'T EXECUTE(P)]** The pointer specified in the instruction does not exist. **■Collateral information** • Common information: Program error location • Individual information: - **■Diagnostic timing** • When instruction executed	Read common information of the error using the programming tool to identify the numeric value (program error location). Check the error step corresponding to the value, and correct it as necessary.	RUN: Off ERR.:Flashing CPU Status:Stop	QCPU LCPU
4211	**[CAN'T EXECUTE(P)]** There was no RET instruction in the executed subroutine program. **■Collateral information** • Common information: Program error location • Individual information: - **■Diagnostic timing** • When instruction executed	Read common information of the error using the programming tool to identify the numeric value (program error location). Check the error step corresponding to the value, and correct it as necessary.	RUN: Off ERR.:Flashing CPU Status:Stop	QCPU LCPU
4212	**[CAN'T EXECUTE(P)]** • The RET instruction exists before the FEND instruction of the main routine program. • The RET instruction is executed before the NEXT instruction is executed in the executed subroutine program. **■Collateral information** • Common information: Program error location • Individual information: - **■Diagnostic timing** • When instruction executed	Read common information of the error using the programming tool to identify the numeric value (program error location). Check the error step corresponding to the value, and correct it as necessary.	RUN: Off ERR.:Flashing CPU Status:Stop	QCPU LCPU
4213	**[CAN'T EXECUTE(P)]** More than 16 nesting levels of the CALL instruction are programmed. **■Collateral information** • Common information: Program error location • Individual information: - **■Diagnostic timing** • When instruction executed	Keep nesting levels at 16 or under.	RUN: Off ERR.:Flashing CPU Status:Stop	QCPU LCPU
4220	**[CAN'T EXECUTE(I)]** Though an interrupt input occurred, the corresponding interrupt pointer does not exist. **■Collateral information** • Common information: - • Individual information: - **■Diagnostic timing** • When instruction executed	Check that the interrupt pointer No. set in parameter exists in the program.	RUN: Off ERR.:Flashing CPU Status:Stop	QCPU LCPU
4221	**[CAN'T EXECUTE(I)]** An IRET instruction does not exist in the executed interrupt program. **■Collateral information** • Common information: Program error location • Individual information: - **■Diagnostic timing** • When instruction executed	Read common information of the error using the programming tool to identify the numeric value (program error location). Check the error step corresponding to the value, and correct it as necessary.	RUN: Off ERR.:Flashing CPU Status:Stop	QCPU LCPU

Error code	Error and cause	Corrective action	LED status, CPU status	Corresponding CPU
4223	**[CAN'T EXECUTE(I)]** The IRET instruction exists before the FEND instruction of the main routine program. **■Collateral information** • Common information: Program error location • Individual information: - **■Diagnostic timing** • When instruction executed	Read common information of the error using the programming tool to identify the numeric value (program error location). Check the error step corresponding to the value, and correct it as necessary.	RUN: Off ERR.:Flashing CPU Status:Stop	QCPU LCPU
	[CAN'T EXECUTE(I)] • The IRET instruction was executed in the fixed scan execution type program. • The STOP instruction was executed in the fixed scan execution type program. **■Collateral information** • Common information: Program error location • Individual information: - **■Diagnostic timing** • When instruction executed			QnU LCPU
4225	**[CAN'T EXECUTE(I)]** The interrupt pointer for the module mounted on the extension base unit is set in the redundant system. **■Collateral information** • Common information: - • Individual information: - **■Diagnostic timing** • At power-on/At reset	Delete the setting of interrupt pointer for the module mounted on the extension base unit, since it cannot be used.	RUN: Off ERR.:Flashing CPU Status:Stop	QnPRH
4230	**[INST. FORMAT ERR.]** The number of CHK and CHKEND instructions is not equal. **■Collateral information** • Common information: Program error location • Individual information: - **■Diagnostic timing** • When instruction executed	Read common information of the error using the programming tool to identify the numeric value (program error location). Check the error step corresponding to the value, and correct it as necessary.	RUN: Off ERR.:Flashing CPU Status:Stop	Qn(H) QnPH
4231	**[INST. FORMAT ERR.]** The number of IX and IXEND instructions is not equal. **■Collateral information** • Common information: Program error location • Individual information: - **■Diagnostic timing** • When instruction executed	Read common information of the error using the programming tool to identify the numeric value (program error location). Check the error step corresponding to the value, and correct it as necessary.	RUN: Off ERR.:Flashing CPU Status:Stop	Qn(H) QnPH QnPRH
4235	**[INST. FORMAT ERR.]** The configuration of the check conditions for the CHK instruction is incorrect. Alternatively, a CHK instruction has been used in a low speed execution type program. **■Collateral information** • Common information: Program error location • Individual information: - **■Diagnostic timing** • When instruction executed	Read common information of the error using the programming tool to identify the numeric value (program error location). Check the error step corresponding to the value, and correct it as necessary.	RUN: Off ERR.:Flashing CPU Status:Stop	Qn(H) QnPH

Error code	Error and cause	Corrective action	LED status, CPU status	Corresponding CPU
4350	**[MULTI-COM. ERROR]** • The multiple CPU high-speed transmission dedicated instruction used in the program specifies the wrong CPU module. Or, the setting in the CPU module is incompatible with the multiple CPU high-speed transmission dedicated instruction. • The reserved CPU is specified. • The uninstalled CPU is specified. • The start I/O number of the target CPU ÷ 16 (n1) is outside the range of 3E0H to 3E3H. • The CPU module where the instruction cannot be executed is specified. • The instruction is executed in a single CPU system. • The host CPU is specified. • The instruction is executed without setting the "Use multiple CPU high speed communication". **■Collateral information** • Common information: Program error location • Individual information: - **■Diagnostic timing** • When instruction executed	Read common information of the error using the programming tool to identify the numeric value (program error location). Check the error step corresponding to the value, and correct it as necessary.	RUN: Off ERR.:Flashing CPU Status:Stop	QnU
4351	**[MULTI-COM. ERROR]** • The multiple CPU high-speed transmission dedicated instruction specified by the program cannot be executed to the specified target CPU module. • The instruction name is wrong. • The instruction unsupported by the target CPU module is specified. **■Collateral information** • Common information: Program error location • Individual information: - **■Diagnostic timing** • When instruction executed	Read common information of the error using the programming tool to identify the numeric value (program error location). Check the error step corresponding to the value, and correct it as necessary.	RUN: Off ERR.:Flashing CPU Status:Stop	QnU
4352	**[MULTI-COM. ERROR]** The number of devices for the multiple CPU high-speed transmission dedicated instruction specified by the program is wrong. **■Collateral information** • Common information: Program error location • Individual information: - **■Diagnostic timing** • When instruction executed	Read common information of the error using the programming tool to identify the numeric value (program error location). Check the error step corresponding to the value, and correct it as necessary.	RUN: Off ERR.:Flashing CPU Status:Stop	QnU
4353	**[MULTI-COM. ERROR]** The device which cannot be used for the multiple CPU high-speed transmission dedicated instruction specified by the program is specified. **■Collateral information** • Common information: Program error location • Individual information: - **■Diagnostic timing** • When instruction executed	Read common information of the error using the programming tool to identify the numeric value (program error location). Check the error step corresponding to the value, and correct it as necessary.	RUN: Off ERR.:Flashing CPU Status:Stop	QnU
4354	**[MULTI-COM. ERROR]** The character string which cannot be handled by the multiple CPU high-speed transmission dedicated instruction is specified. **■Collateral information** • Common information: Program error location • Individual information: - **■Diagnostic timing** • When instruction executed	Read common information of the error using the programming tool to identify the numeric value (program error location). Check the error step corresponding to the value, and correct it as necessary.	RUN: Off ERR.:Flashing CPU Status:Stop	QnU

Error code	Error and cause	Corrective action	LED status, CPU status	Corresponding CPU
4355	**[MULTI-COM. ERROR]** The number of read/write data (number of request/receive data) for the multiple CPU high-speed transmission dedicated instruction specified by the program is not valid. **■Collateral information** • Common information: Program error location • Individual information: - **■Diagnostic timing** • When instruction executed	Read common information of the error using the programming tool to identify the numeric value (program error location). Check the error step corresponding to the value, and correct it as necessary.	RUN: Off ERR.:Flashing CPU Status:Stop	QnU
4400	**[SFCP. CODE ERROR]** No SFCP or SFCPEND instruction in SFC program. **■Collateral information** • Common information: Program error location • Individual information: - **■Diagnostic timing** • STOP → RUN	Write the program to the CPU module again using the programming tool.	RUN: Off ERR.:Flashing CPU Status:Stop	Qn(H) QnPH QnPRH
4410	**[CAN'T SET(BL)]** The block number designated by the SFC program exceeds the range. **■Collateral information** • Common information: Program error location • Individual information: - **■Diagnostic timing** • At power-on/At reset/STOP → RUN	Write the program to the CPU module again using the programming tool.	RUN: Off ERR.:Flashing CPU Status:Stop	Q00J/Q00/Q01 Qn(H) QnPH QnPRH QnU LCPU
4411	**[CAN'T SET(BL)]** Block number designations overlap in SFC program. **■Collateral information** • Common information: Program error location • Individual information: - **■Diagnostic timing** • At power-on/At reset/STOP → RUN	Write the program to the CPU module again using the programming tool.	RUN: Off ERR.:Flashing CPU Status:Stop	Q00J/Q00/Q01 Qn(H) QnPH QnPRH QnU LCPU
4420	**[CAN'T SET(S)]** A step number designated in an SFC program exceeds the range. **■Collateral information** • Common information: Program error location • Individual information: - **■Diagnostic timing** • At power-on/At reset/STOP → RUN	Write the program to the CPU module again using the programming tool.	RUN: Off ERR.:Flashing CPU Status:Stop	Q00J/Q00/Q01 Qn(H) QnPH QnPRH QnU LCPU
4421	**[CAN'T SET(S)]** The number of steps in the SFC program exceeds the total number of step relays. **■Collateral information** • Common information: Program error location • Individual information: - **■Diagnostic timing** • At power-on/At reset/STOP → RUN	Correct the program so that the number of steps in the SFC program may not exceed the total number of step relays.	RUN: Off ERR.:Flashing CPU Status:Stop	Q00J/Q00/Q01 Qn(H) QnPH QnPRH QnU LCPU
		Increase the total number of step relays in the Device tab of "PLC Parameter".		QnU
4422	**[CAN'T SET(S)]** Step number designations overlap in SFC program. **■Collateral information** • Common information: Program error location • Individual information: - **■Diagnostic timing** • At power-on/At reset/STOP → RUN	Write the program to the CPU module again using the programming tool.	RUN: Off ERR.:Flashing CPU Status:Stop	Q00J/Q00/Q01 Qn(H) QnPH QnPRH QnU LCPU
4423	**[CAN'T SET(S)]** The total number of (maximum step No.+1) of each block exceeds the total number of step relays. **■Collateral information** • Common information: Program error location • Individual information: - **■Diagnostic timing** • At power-on/At reset/STOP → RUN	Correct the total number of step relays so that it does not exceed the total number of (maximum step No.+1) of each block.	RUN: Off ERR.:Flashing CPU Status:Stop	Q00J/Q00/Q01 QnU LCPU
		Increase the total number of step relays in the Device tab of "PLC Parameter".		QnU

Error code	Error and cause	Corrective action	LED status, CPU status	Corresponding CPU
4430	**[SFC EXE. ERROR]** The SFC program cannot be executed. • The data of the block data setting is illegal. • The SFC data device of the block data setting is beyond the device setting range set in "PLC Parameter". **■Collateral information** • Common information: File name/Drive name • Individual information: - **■Diagnostic timing** • At power-on/At reset/STOP → RUN/When SFC program is executed	• Write the program to the CPU module again using the programming tool. • After correcting the setting of the SFC data device, write it to the CPU module. • Correct the device setting range in "PLC Parameter", and write it to the CPU module.	RUN: Off ERR.:Flashing CPU Status:Stop	Q00J/Q00/Q01 QnU LCPU
4431	**[SFC EXE. ERROR]** The SFC program cannot be executed. • The block parameter setting is abnormal. **■Collateral information** • Common information: File name/Drive name • Individual information: - **■Diagnostic timing** • At power-on/At reset/STOP → RUN	Write the program to the CPU module again using the programming tool.	RUN: Off ERR.:Flashing CPU Status:Stop	Q00J/Q00/Q01 QnU LCPU
4432	**[SFC EXE. ERROR]** The SFC program cannot be executed. • The structure of the SFC program is illegal. **■Collateral information** • Common information: File name/Drive name • Individual information: - **■Diagnostic timing** • At power-on/At reset/STOP → RUN	Write the program to the CPU module again using the programming tool.	RUN: Off ERR.:Flashing CPU Status:Stop	Q00J/Q00/Q01 QnU LCPU
4500	**[SFCP. FORMAT ERR.]** The numbers of BLOCK and BEND instructions in an SFC program are not equal. **■Collateral information** • Common information: Program error location • Individual information: - **■Diagnostic timing** • STOP → RUN	Write the program to the CPU module again using the programming tool.	RUN: Off ERR.:Flashing CPU Status:Stop	Qn(H) QnPH QnPRH
4501	**[SFCP. FORMAT ERR.]** The configuration of the STEP* to TRAN* to TSET to SEND instructions in the SFC program is incorrect. **■Collateral information** • Common information: Program error location • Individual information: - **■Diagnostic timing** • STOP → RUN	Write the program to the CPU module again using the programming tool.	RUN: Off ERR.:Flashing CPU Status:Stop	Qn(H) QnPH QnPRH
4502	**[SFCP. FORMAT ERR.]** The structure of the SFC program is illegal. • STEPI* instruction does not exist in the block of the SFC program. **■Collateral information** • Common information: Program error location • Individual information: - **■Diagnostic timing** • At power-on/At reset/STOP → RUN	Write the program to the CPU module again using the programming tool.	RUN: Off ERR.:Flashing CPU Status:Stop	Q00J/Q00/Q01 Qn(H) QnPH QnPRH QnU LCPU

Error code	Error and cause	Corrective action	LED status, CPU status	Corresponding CPU
4503	**[SFCP. FORMAT ERR.]** The structure of the SFC program is illegal. • The step specified in the TSET instruction does not exist. **■Collateral information** • Common information: Program error location • Individual information: - **■Diagnostic timing** • STOP → RUN	• Write the program to the CPU module again using the programming tool. • Read common information of the error using the programming tool to identify the numeric value (program error location). Check the error step corresponding to the value, and correct it as necessary.	RUN: Off ERR.:Flashing CPU Status:Stop	Qn(H) QnPH QnPRH
	[SFCP. FORMAT ERR.] The structure of the SFC program is illegal. • The step specified in the TSET instruction does not exist. • In jump transition, the host step number was specified as the destination step number. **■Collateral information** • Common information: Program error location • Individual information: - **■Diagnostic timing** • When SFC program is executed			Q00J/Q00/Q01 QnU LCPU
4504	**[SFCP. FORMAT ERR.]** The structure of the SFC program is illegal. • The step specified in the TAND instruction does not exist. **■Collateral information** • Common information: Program error location • Individual information: - **■Diagnostic timing** • When SFC program is executed	Write the program to the CPU module again using the programming tool.	RUN: Off ERR.:Flashing CPU Status:Stop	Q00J/Q00/Q01 Qn(H) QnPH QnPRH QnU LCPU
4505	**[SFCP. FORMAT ERR.]** The structure of the SFC program is illegal. • In the operation output of a step, the SET Sn/BLmSn or RST Sn/BLmSn instruction was specified for the host step. **■Collateral information** • Common information: Program error location • Individual information: - **■Diagnostic timing** • When instruction executed	Read common information of the error using the programming tool to identify the numeric value (program error location). Check the error step corresponding to the value, and correct it as necessary.	RUN: Off ERR.:Flashing CPU Status:Stop	Q00J/Q00/Q01 QnU LCPU
4506	**[SFCP. FORMAT ERR.]** The structure of the SFC program is illegal. • In a reset step, the host step number was specified as the destination step. **■Collateral information** • Common information: Program error location • Individual information: - **■Diagnostic timing** • When instruction executed	Read common information of the error using the programming tool to identify the numeric value (program error location). Check the error step corresponding to the value, and correct it as necessary.	RUN: Off ERR.:Flashing CPU Status:Stop	Q00J/Q00/Q01 QnU LCPU
4600	**[SFCP. OPE. ERROR]** The SFC program contains data that cannot be processed. **■Collateral information** • Common information: Program error location • Individual information: - **■Diagnostic timing** • When instruction executed	Read common information of the error using the programming tool to identify the numeric value (program error location). Check the error step corresponding to the value, and correct it as necessary.	RUN: Off/On ERR.:Flashing/On CPU Status: Stop/Continue[*1]	Qn(H) QnPH QnPRH
4601	**[SFCP. OPE. ERROR]** Exceeds device range that can be designated by the SFC program. **■Collateral information** • Common information: Program error location • Individual information: - **■Diagnostic timing** • When instruction executed	Read common information of the error using the programming tool to identify the numeric value (program error location). Check the error step corresponding to the value, and correct it as necessary.	RUN: Off/On ERR.:Flashing/On CPU Status: Stop/Continue[*1]	Qn(H) QnPH QnPRH

Error code	Error and cause	Corrective action	LED status, CPU status	Corresponding CPU
4602	**[SFCP. OPE. ERROR]** The START instruction in an SFC program is preceded by an END instruction. **■Collateral information** • Common information: Program error location • Individual information: - **■Diagnostic timing** • When instruction executed	Read common information of the error using the programming tool to identify the numeric value (program error location). Check the error step corresponding to the value, and correct it as necessary.	RUN: Off/On ERR.:Flashing/On CPU Status: Stop/Continue*1	Qn(H) QnPH QnPRH
4610	**[SFCP. EXE. ERROR]** The active step information at presumptive start of the SFC program is incorrect. **■Collateral information** • Common information: Program error location • Individual information: - **■Diagnostic timing** • STOP → RUN	Read common information of the error using the programming tool to identify the numeric value (program error location). Check the error step corresponding to the value, and correct it as necessary. The program is automatically subjected to an initial start.	RUN: On ERR.:On CPU Status:Continue	Qn(H) QnPH QnPRH
4611	**[SFCP. EXE. ERROR]** Key-switch was reset during RUN when presumptive start was designated for SFC program. **■Collateral information** • Common information: Program error location • Individual information: - **■Diagnostic timing** • STOP → RUN	Read common information of the error using the programming tool to identify the numeric value (program error location). Check the error step corresponding to the value, and correct it as necessary. The program is automatically subjected to an initial start.	RUN: On ERR.:On CPU Status:Continue	Qn(H) QnPH QnPRH
4620	**[BLOCK EXE. ERROR]** Startup was executed at a block in the SFC program that was already started up. **■Collateral information** • Common information: Program error location • Individual information: - **■Diagnostic timing** • When instruction executed	Read common information of the error using the programming tool to identify the numeric value (program error location). Check the error step corresponding to the value, and correct it as necessary.	RUN: Off ERR.:Flashing CPU Status:Stop	Qn(H) QnPH QnPRH QnU
4621	**[BLOCK EXE. ERROR]** Startup was attempted at a block that does not exist in the SFC program. **■Collateral information** • Common information: Program error location • Individual information: - **■Diagnostic timing** • When instruction executed	• Read common information of the error using the programming tool to identify the numeric value (program error location). Check the error step corresponding to the value, and correct it as necessary. • Turn on SM321 if it is off.	RUN: Off ERR.:Flashing CPU Status:Stop	Q00J/Q00/Q01 Qn(H) QnPH QnPRH QnU LCPU
4630	**[STEP EXE. ERROR]** The step specified in the SFC program is already activated. **■Collateral information** • Common information: Program error location • Individual information: - **■Diagnostic timing** • When instruction executed	Read common information of the error using the programming tool to identify the numeric value (program error location). Check the error step corresponding to the value, and correct it as necessary.	RUN: Off ERR.:Flashing CPU Status:Stop	Qn(H) QnPH QnPRH
4631	**[STEP EXE. ERROR]** • Startup was attempted at the step that does not exist in the SFC program. Or, the step that does not exist in the SFC program was specified for end. • Forced transition was executed based on the transition condition that does not exit in the SFC program. Or, the transition condition for forced transition that does not exit in the SFC program was canceled. **■Collateral information** • Common information: Program error location • Individual information: - **■Diagnostic timing** • When instruction executed	• Read common information of the error using the programming tool to identify the numeric value (program error location). Check the error step corresponding to the value, and correct it as necessary. • Turn on SM321 if it is off.	RUN: Off ERR.:Flashing CPU Status:Stop	Q00J/Q00/Q01 Qn(H) QnPH QnPRH QnU LCPU

Error code	Error and cause	Corrective action	LED status, CPU status	Corresponding CPU
4632	**[STEP EXE. ERROR]** There were too many simultaneous active steps in blocks that can be designated by the SFC program. **■Collateral information** • Common information: Program error location • Individual information: - **■Diagnostic timing** • When instruction executed	Read common information of the error using the programming tool to identify the numeric value (program error location). Check the error step corresponding to the value, and correct it as necessary.	RUN: Off ERR.:Flashing CPU Status:Stop	Qn(H) QnPH QnPRH QnU LCPU
4633	**[STEP EXE. ERROR]** There were too many simultaneous active steps in all blocks that can be designated. **■Collateral information** • Common information: Program error location • Individual information: - **■Diagnostic timing** • When instruction executed	Read common information of the error using the programming tool to identify the numeric value (program error location). Check the error step corresponding to the value, and correct it as necessary.	RUN: Off ERR.:Flashing CPU Status:Stop	Qn(H) QnPH QnPRH QnU LCPU

*1 The operating status of the CPU module after an error has occurred can be set in parameter. (LED indication changes according to the status.)

*2 Modules whose serial number (first five digits) is "04012" or later

Appendix 1.7 List of error codes (5000 to 5999)

The following table shows the error messages, the error contents and causes, and the corrective actions for the error codes (5000 to 5999).

Error code	Error and cause	Corrective action	LED status, CPU status	Corresponding CPU
5000	**[WDT ERROR]** The scan time of the initial execution type program exceeded the initial execution monitoring time specified in the PLC RAS tab of "PLC Parameter". **■Collateral information** • Common information: Time (value set) • Individual information: Time (value actually measured) **■Diagnostic timing** • Always	• Read the individual information of the error using the programming tool to identify the numeric value (time). Check the value and shorten the scan time. • Change the initial execution monitoring time or the WDT value in the PLC RAS tab of "PLC Parameter". • Resolve the endless loop caused by jump transition. • If the error persists even after the actions mentioned above are taken, the possible cause is a hardware failure of the system. Please consult your local Mitsubishi representative.	RUN: Off ERR.:Flashing CPU Status:Stop	Qn(H) QnPH QnPRH QnU LCPU
	[WDT ERROR] • The power supply of the standby system is turned OFF. • The tracking cable is disconnected or connected without turning off or resetting the standby system. • The tracking cable is not secured by the connector fixing screws. **■Collateral information** • Common information: Time (value set) • Individual information: Time (value actually measured) **■Diagnostic timing** • Always	• Since power-off of the standby system increases the control system scan time, reset the WDT value, taking the increase of the control system scan time into consideration. • If the tracking cable was disconnected during operation, securely connect it and restart the CPU module. If the same error code is displayed again, the cause is a hardware failure of the tracking cable or CPU module. Please consult your local Mitsubishi representative.		QnPRH
5001	**[WDT ERROR]** The scan time of the program exceeded the WDT value specified in the PLC RAS tab of "PLC Parameter". **■Collateral information** • Common information: Time (value set) • Individual information: Time (value actually measured) **■Diagnostic timing** • Always	• Read the individual information of the error using the programming tool to identify the numeric value (time). Check the value and shorten the scan time. • Change the initial execution monitoring time or the WDT value in the PLC RAS tab of "PLC Parameter". • Resolve the infinite loop caused by jump sequence. • Check the execution number of the interrupt program, and reduce the occurrence number of interruption. • If the error persists even after the actions mentioned above are taken, the possible cause is a hardware failure of the system. Please consult your local Mitsubishi representative.	RUN: Off ERR.:Flashing CPU Status:Stop	QCPU LCPU
	[WDT ERROR] • The power supply of the standby system is turned OFF. • The tracking cable is disconnected or connected without turning off or resetting the standby system. • The tracking cable is not secured by the connector fixing screws. **■Collateral information** • Common information: Time (value set) • Individual information: Time (value actually measured) **■Diagnostic timing** • Always	• Since power-off of the standby system increases the control system scan time, reset the WDT value, taking the increase of the control system scan time into consideration. • If the tracking cable was disconnected during operation, securely connect it and restart the CPU module. If the same error code is displayed again, the cause is a hardware failure of the tracking cable or CPU module. Please consult your local Mitsubishi representative.		QnPRH

Error code	Error and cause	Corrective action	LED status, CPU status	Corresponding CPU
5002	**[WDT ERROR]** The execution time of one high-speed interrupt exceeded 100ms. **■Collateral information** • Common information: Time (value set) • Individual information: Time (value actually measured) **■Diagnostic timing** • Always	• If the processing time of the high-speed interrupt program is long, review the program. • Cancel sampling trace, data logging, scan time measurement, and step specification for executional conditional device test in the interrupt program.	RUN: Off ERR.:Flashing CPU Status:Stop	QnUDV QnUDPV
5010	**[PRG. TIME OVER]** The program scan time exceeded the constant scan time specified in the PLC RAS tab of "PLC Parameter". **■Collateral information** • Common information: Time (value set) • Individual information: Time (value actually measured) **■Diagnostic timing** • Always	Review the constant scan setting time.	RUN: On ERR.:On CPU Status:Continue	Qn(H) QnPH QnPRH QnU LCPU
	[PRG. TIME OVER] The low speed program execution time set in the PLC RAS tab of "PLC parameter" exceeded the excess time of the constant scan. **■Collateral information** • Common information: Time (value set) • Individual information: Time (value actually measured) **■Diagnostic timing** • Always	• Review the constant scan setting time. • To secure sufficient excess time, correct the value for "Constant scanning" and "Low Speed Program Execution Time" in "PLC Parameter".		Qn(H) QnPH QnPRH
	[PRG. TIME OVER] The program scan time exceeded the constant scan setting time specified in the PLC RAS tab of "PLC parameter". **■Collateral information** • Common information: Time (value set) • Individual information: Time (value actually measured) **■Diagnostic timing** • Always	Review the constant scan setting time in "PLC parameter" so that the excess time of constant scan can be fully secured.		Q00J/Q00/Q01
5011	**[PRG. TIME OVER]** The scan time of the low speed execution type program exceeded the low speed execution watch time specified in the PLC RAS tab of "PLC parameter". **■Collateral information** • Common information: Time (value set) • Individual information: Time (value actually measured) **■Diagnostic timing** • Always	Read the individual information of the error using the programming tool to identify the numeric value (time). Check the value and shorten the scan time. Change the low speed execution watch time in the PLC RAS setting of "PLC Parameter".	RUN: On ERR.:On CPU Status:Continue	Qn(H) QnPH

Appendix 1.8 List of error codes (6000 to 6999)

The following table shows the error messages, the error contents and causes, and the corrective actions for the error codes (6000 to 6999).

Error code	Error and cause	Corrective action	LED status, CPU status	Corresponding CPU
6000	**[FILE DIFF.]** In a redundant system, the control system and standby system do not have the same programs and parameters. The file type detected as different between the two systems can be checked by the file name of the error common information. • The program is different. (File name = ********.QPG) • The PLC parameters/network parameters/redundant parameters are different. (File name = PARAM.QPA) • The remote password is different. (File name = PARAM.QPA) • The intelligent function module parameters are different. (File name = IPARAM.QPA) • The device initial values are different. (File name = ********.QDI) • The size of the area, which is used for enabling writing multiple program blocks to the CPU module during running, do not match. (File name = MBOC.QMB) (This can be detected from the standby system of the redundant system.) **■Collateral information** • Common information: File name • Individual information: - **■Diagnostic timing** • At power-on/At reset/At tracking cable connection/At changing to backup mode/At completion of write during RUN/At system switching/At switching both systems into RUN	• Match the programs and parameters of the control system and standby system. • Verify the CPU module by either of the following procedures 1) or 2) to clarify the differences between the files of both systems. Correct wrong files and write them to the CPU module again. 1) Read the programs and parameters of System A using GX Works2, GX Developer, or PX Developer, and verify them with those of System B. 2) Verify the programs and parameters saved in GX Works2, GX Developer, or PX Developer (offline environment) with those written to the CPU modules of both systems. • When the size of the area, which is used for enabling writing multiple program blocks to the CPU module during running, do not match, perform either of corrective actions 1) or 2). 1) Using the memory copy function, copy the program memory from the control system to the standby system. 2) Format the CPU module program memories of both systems. (For both systems, specify the same values for the size of the area, which is used for enabling writing multiple program blocks to the CPU module during running.)	RUN: Off ERR.:Flashing CPU Status:Stop	QnPRH
6001	**[FILE DIFF.]** In the redundant system, the valid-parameter drive setting (SW2, SW3) set by the DIP switches differs between the control system and standby system. **■Collateral information** • Common information: - • Individual information: - **■Diagnostic timing** • At power-on/At reset/At tracking cable connection/At operation mode change	Match the valid-parameter drive settings (SW2, SW3) for both the control and standby systems using the DIP switches.	RUN: Off ERR.:Flashing CPU Status:Stop	QnPRH
6010	**[OPE. MODE DIFF.]** The operational status of the control system and standby system in the redundant system is not the same. (This can be detected from the standby system of the redundant system.) **■Collateral information** • Common information: - • Individual information: - **■Diagnostic timing** • Always	Synchronize the operation statuses of the control system and standby system.	RUN: On ERR.:On CPU Status:Continue	QnPRH

Error code	Error and cause	Corrective action	LED status, CPU status	Corresponding CPU
6020	**[OPE. MODE DIFF.]** At power-on/reset, the RUN/STOP switch settings of the control system and standby system are not the same in a redundant system. (This can be detected from the control system or standby system of the redundant system.) **■Collateral information** • Common information: - • Individual information: - **■Diagnostic timing** • At power-on/At reset	Set the RUN/STOP switches of the control system and standby system to the same setting.	RUN: Off ERR.:Flashing CPU Status:Stop	QnPRH
6030	**[UNIT LAY. DIFF.]** • In a redundant system, the module configuration differs between the control system and standby system. • The network module mode setting differs between the two systems. (This can be detected from the control system or standby system of the redundant system.) **■Collateral information** • Common information: Module No. • Individual information: - **■Diagnostic timing** • At power-on/At reset/At tracking cable connection/At operation mode change	• Match the module configurations of the control system and standby system. • In the redundant setting of "Network parameter", match the mode setting of System B to that of System A.	RUN: Off ERR.:Flashing CPU Status:Stop	QnPRH
6035	**[UNIT LAY. DIFF.]** In a redundant system, the CPU module model name differs between the control system and standby system. (This can be detected from the standby system of the redundant system.) **■Collateral information** • Common information: - • Individual information: - **■Diagnostic timing** • At power-on/At reset/At tracking cable connection/At operation mode change	Match the model names of the control system and standby system.	RUN: Off ERR.:Flashing CPU Status:Stop	QnPRH
6036	**[UNIT LAY. DIFF.]** A difference in the remote I/O configuration of the MELSECNET/H multiplexed remote I/O network between the control system and standby system of a redundant system was detected. (This can be detected from the control system or standby system of the redundant system.) **■Collateral information** • Common information: Module No. • Individual information: - **■Diagnostic timing** • Always	Check the network cables of the MELSECNET/H multiplexed remote I/O network for disconnection.	RUN: Off ERR.:Flashing CPU Status:Stop	QnPRH
6040	**[CARD TYPE DIFF.]** In the redundant system, the memory card insertion status (inserted/not inserted) differs between the control system and standby system. **■Collateral information** • Common information: - • Individual information: - **■Diagnostic timing** • At power-on/At reset	Match the memory card insertion status (inserted/not inserted) of the control system and standby system.	RUN: Off ERR.:Flashing CPU Status:Stop	QnPRH
6041	**[CARD TYPE DIFF.]** In the redundant system, the memory card type differs between the control system and standby system. **■Collateral information** • Common information: - • Individual information: - **■Diagnostic timing** • At power-on/At reset	Match the memory card types of the control system and standby system.	RUN: Off ERR.:Flashing CPU Status:Stop	QnPRH

Error code	Error and cause	Corrective action	LED status, CPU status	Corresponding CPU
6050	**[CAN'T EXE. MODE]** The function inexecutable in the debug mode or operation mode (backup/separate mode) was executed. (This can be detected from the control system or standby system of the redundant system.) **■Collateral information** • Common information: - • Individual information: - **■Diagnostic timing** • Always	Execute the function executable in the debug mode or operation mode (backup/separate mode).	RUN: On ERR.:On CPU Status:Continue	QnPRH
6060	**[CPU MODE DIFF.]** In a redundant system, the operation mode (backup/separate) differs between the control system and standby system. (This can be detected from the standby system of the redundant system.) **■Collateral information** • Common information: - • Individual information: - **■Diagnostic timing** • At power-on/At reset/At tracking cable connection	Match the operation modes of the control system and standby system.	RUN: Off ERR.:Flashing CPU Status:Stop	QnPRH
6061	**[CPU MODE DIFF.]** In a redundant system, the operation mode (backup/separate) differs between the control system and standby system. (This can be detected from the standby system of the redundant system.) **■Collateral information** • Common information: - • Individual information: - **■Diagnostic timing** • When an END instruction executed	Match the operation modes of the control system and standby system.	RUN: Off ERR.:Flashing CPU Status:Stop	QnPRH
6062	**[CPU MODE DIFF.]** Both System A and B are in the same system status (control system). (This can be detected from the system B of the redundant system.) **■Collateral information** • Common information: - • Individual information: - **■Diagnostic timing** • At power-on/At reset/At tracking cable connection	Power the CPU module (System B) which resulted in a stop error, OFF and then ON.	RUN: Off ERR.:Flashing CPU Status:Stop	QnPRH
6100	**[TRK. TRANS. ERR.]** • An error (e.g. retry limit exceeded) occurred in tracking (data transmission). (This error may be caused by tracking cable removal or other system power-off (including reset).) • The error occurred at a startup since the redundant system startup procedure was not followed. **■Collateral information** • Common information: Tracking transmission data classification • Individual information: - **■Diagnostic timing** • Always	• Check the CPU module or tracking cable. If the same error occurs, the cause is a failure of the CPU module or tracking cable. Please consult your local Mitsubishi representative. • Confirm the redundant system startup procedure, and execute a startup again.	RUN: On ERR.:On CPU Status:Continue	QnPRH

Error code	Error and cause	Corrective action	LED status, CPU status	Corresponding CPU
6101	**[TRK. TRANS. ERR.]** • A timeout error occurred in tracking (data transmission). (This error may be caused by tracking cable removal or other system power-off (including reset).) • The error occurred at a startup since the redundant system startup procedure was not followed. (This can be detected from the control system or standby system of the redundant system.) **■Collateral information** • Common information: Tracking transmission data classification • Individual information: - **■Diagnostic timing** • Always	• Check the CPU module or tracking cable. If the same error occurs, the cause is a failure of the CPU module or tracking cable. Please consult your local Mitsubishi representative. • Confirm the redundant system startup procedure, and execute a startup again.	RUN: On ERR.:On CPU Status:Continue	QnPRH
6102	**[TRK. TRANS. ERR.]** A data sum value error occurred in tracking (data reception). (This can be detected from the control system or standby system of the redundant system.) **■Collateral information** • Common information: - • Individual information: - **■Diagnostic timing** • Always	• Check the CPU module or tracking cable. If the same error occurs, the cause is a failure of the CPU module or tracking cable. Please consult your local Mitsubishi representative. • Confirm the redundant system startup procedure, and execute a startup again.	RUN: On ERR.:On CPU Status:Continue	QnPRH
6103	**[TRK. TRANS. ERR.]** • A data error (other than sum value error) occurred in tracking (data reception). (This error may be caused by tracking cable removal or other system power-off (including reset).) • The error occurred at a startup since the redundant system startup procedure was not followed. (This can be detected from the control system or standby system of the redundant system.) **■Collateral information** • Common information: - • Individual information: - **■Diagnostic timing** • Always	• Check the CPU module or tracking cable. If the same error occurs, the cause is a failure of the CPU module or tracking cable. Please consult your local Mitsubishi representative. • Confirm the redundant system startup procedure, and execute a startup again.	RUN: On ERR.:On CPU Status:Continue	QnPRH
6105	**[TRK. TRANS. ERR.]** • An error (e.g. retry limit exceeded) occurred in tracking (data transmission). (This error may be caused by tracking cable removal or other system power-off (including reset).) • The error occurred at a startup since the redundant system startup procedure was not followed. (This can be detected from the control system or standby system of the redundant system.) **■Collateral information** • Common information: Tracking transmission data classification • Individual information: - **■Diagnostic timing** • Always	• Check the CPU module or tracking cable. If the same error occurs, the cause is a failure of the CPU module or tracking cable. Please consult your local Mitsubishi representative. • Confirm the redundant system startup procedure, and execute a startup again.	RUN: On ERR.:On CPU Status:Continue	QnPRH

Error code	Error and cause	Corrective action	LED status, CPU status	Corresponding CPU
6106	**[TRK. TRANS. ERR.]** • A timeout error occurred in tracking (data transmission). (This error may be caused by tracking cable removal or other system power-off (including reset).) • The error occurred at a startup since the redundant system startup procedure was not followed. (This can be detected from the control system or standby system of the redundant system.) **■Collateral information** • Common information: Tracking transmission data classification • Individual information: - **■Diagnostic timing** • Always	• Check the CPU module or tracking cable. If the same error occurs, the cause is a failure of the CPU module or tracking cable. Please consult your local Mitsubishi representative. • Confirm the redundant system startup procedure, and execute a startup again.	RUN: On ERR.:On CPU Status:Continue	QnPRH
6107	**[TRK. TRANS. ERR.]** A data sum value error occurred in tracking (data reception). (This can be detected from the control system or standby system of the redundant system.) **■Collateral information** • Common information: - • Individual information: - **■Diagnostic timing** • Always	• Check the CPU module or tracking cable. If the same error occurs, the cause is a failure of the CPU module or tracking cable. Please consult your local Mitsubishi representative. • Confirm the redundant system startup procedure, and execute a startup again.	RUN: On ERR.:On CPU Status:Continue	QnPRH
6108	**[TRK. TRANS. ERR.]** • A data error (other than sum value error) occurred in tracking (data reception). (This error may be caused by tracking cable removal or other system power-off (including reset).) • The error occurred at a startup since the redundant system startup procedure was not followed. (This can be detected from the control system or standby system of the redundant system.) **■Collateral information** • Common information: - • Individual information: - **■Diagnostic timing** • Always	• Check the CPU module or tracking cable. If the same error occurs, the cause is a failure of the CPU module or tracking cable. Please consult your local Mitsubishi representative. • Confirm the redundant system startup procedure, and execute a startup again.	RUN: On ERR.:On CPU Status:Continue	QnPRH
6110	**[TRK. SIZE ERROR]** The tracking capacity exceeded the allowed range. (This can be detected from the control system or standby system of the redundant system.) **■Collateral information** • Common information: Reason(s) for tracking size excess error • Individual information: - **■Diagnostic timing** • When an END instruction executed	Reexamine the tracking capacity.	RUN: On ERR.:On CPU Status:Continue	QnPRH
6111	**[TRK. SIZE ERROR]** The control system does not have enough file register capacity for the file registers specified in the tracking settings. (This can be detected from the control system or standby system of the redundant system.) **■Collateral information** • Common information: - • Individual information: - **■Diagnostic timing** • When an END instruction executed	Switch to the file registers of which capacity is greater than the file registers specified in the tracking settings.	RUN: On ERR.:On CPU Status:Continue	QnPRH

Error code	Error and cause	Corrective action	LED status, CPU status	Corresponding CPU
6112	**[TRK. SIZE ERROR]** File registers greater than those of the standby system were tracked and transmitted from the control system. (This can be detected from the standby system of the redundant system.) **■Collateral information** • Common information: - • Individual information: - **■Diagnostic timing** • When an END instruction executed	Switch to the file registers of which capacity is greater than the file registers specified in the tracking settings.	RUN: On ERR.:On CPU Status:Continue	QnPRH
6120	**[TRK. CABLE ERR.]** • A start was made without the tracking cable being connected. • A start was made with the tracking cable faulty. • As the tracking communication hardware of the CPU module was faulty, the CPU module could not communicate with the other system through the tracking cable. (This can be detected from the control system or standby system of the redundant system.) **■Collateral information** • Common information: - • Individual information: - **■Diagnostic timing** • At power-on/At reset	Connect a tracking cable and start up the module. If the same error occurs, the cause is a failure of the tracking cable or the tracking communication hardware of the CPU module. Please consult your local Mitsubishi representative.	RUN: Off ERR.:Flashing CPU Status:Stop	QnPRH
6130	**[TRK. DISCONNECT]** • The tracking cable was removed. • The tracking cable became faulty while the CPU module is running. • The tracking communication hardware of the CPU module became faulty. (This can be detected from the control system or standby system of the redundant system.) **■Collateral information** • Common information: - • Individual information: - **■Diagnostic timing** • Always	• If the tracking cable was removed, connect the tracking cable to the connectors of the CPU modules of the two systems. • If the error remains even after the above action is taken, the cause is a failure of the tracking cable or the tracking communication hardware of the CPU module. Please consult your local Mitsubishi representative.	RUN: On ERR.:On CPU Status:Continue	QnPRH
6140	**[TRK.INIT. ERROR]** • The other system did not respond during initial communication at power-on/reset. • The error occurred at a startup since the redundant system startup procedure was not followed. (This can be detected from the control system or standby system of the redundant system.) **■Collateral information** • Common information: - • Individual information: - **■Diagnostic timing** • At power-on/At reset	• Power off and on or reset the CPU module that detects the error. If the same error occurs, the cause is a hardware failure of the CPU module. Please consult your local Mitsubishi representative. • Confirm the redundant system startup procedure, and execute a startup again.	RUN: Off ERR.:Flashing CPU Status:Stop	QnPRH

Error code	Error and cause	Corrective action	LED status, CPU status	Corresponding CPU
6200	**[CONTROL EXE.]** The standby system has been switched to the control system in a redundant system. (Detected by the CPU that was switched from the standby system to the control system.) Since this error code does not indicate the error information of the CPU module but indicates its status, the error code and error information are not stored into SD0 to 26, but are stored into the error log every system switching. (To check the error information, obtain the error log using the programming tool.) **■Collateral information** • Common information: Reason(s) for system switching • Individual information: - **■Diagnostic timing** • Always	—	RUN: On ERR.:Off CPU Status:No error	QnPRH
6210	**[STANDBY]** The control system has been switched to the standby system in a redundant system. (Detected by the CPU that was switched from the control system to the standby system.) Since this error code does not indicate the error information of the CPU module but indicates its status, the error code and error information are not stored into SD0 to 26, but are stored into the error log every system switching. (To check the error information, obtain the error log using the programming tool.) **■Collateral information** • Common information: Reason(s) for system switching • Individual information: - **■Diagnostic timing** • Always	—	RUN: On ERR.:Off CPU Status:No error	QnPRH
6220	**[CAN'T SWITCH]** The system cannot be switched due to a standby system error, tracking cable failure, or online module change being executed in the separate mode. Causes for switching system at control system are as follows: • System switching by SP.CONTSW instruction • System switching request from network module **■Collateral information** • Common information: Reason(s) for system switching • Individual information: Reason(s) for system switching failure **■Diagnostic timing** • At switching execution	• Check the status of the standby system and resolve the error. • Complete the online module change.	RUN: On ERR.:On CPU Status:Continue	QnPRH
6300	**[STANDBY SYS. DOWN]** Any of the following errors was detected in the backup mode. • The standby system has not started up in the redundant system. • The standby system has developed a stop error in the redundant system. • The CPU module in the debug mode was connected to the operating control system. (This can be detected from the control system of the redundant system.) **■Collateral information** • Common information: - • Individual information: - **■Diagnostic timing** • Always	• Check whether the standby system is on or not, and if it is not on, power it on. • Check whether the standby system has been reset or not, and if it has been reset, unreset it. • Check whether the standby system has developed a stop error or not, and if it has developed the error, remove the error factor and restart it. • When the CPU module in the debug mode was connected to the control system operating in the backup mode, make connection so that the control system and standby system are combined correctly.	RUN: On ERR.:On CPU Status:Continue	QnPRH

Error code	Error and cause	Corrective action	LED status, CPU status	Corresponding CPU
6310	**[CONTROL SYS. DOWN]** Any of the following errors was detected in the backup mode. • The control system has not started up in the redundant system. • The control system has developed a stop error in the redundant system. • The CPU module in the debug mode was connected to the operating standby system. • The error occurred at a startup since the redundant system startup procedure was not followed. (This can be detected from the standby system of the redundant system.) **■Collateral information** • Common information: - • Individual information: - **■Diagnostic timing** • Always	• The standby system exists but the control system does not exist. • Check whether the system other than the standby system is on or not, and if it is not on, power it on. • Check whether the system other than the standby system has been reset or not, and if it is has been reset, unreset it. • Check whether the system other than the standby system has developed a stop error or not, and if has developed the error, remove the error factor, set the control system and standby system to the same operating status, and restart. • When the CPU module in the debug mode was connected to the control system operating in the backup mode, make connection so that the control system and control system are combined correctly. • Confirm the redundant system startup procedure, and execute a startup again.	RUN: Off ERR.:Flashing CPU Status:Stop	QnPRH
6311	**[CONTROL SYS. DOWN]** • As consistency check data has not transmitted from the control system in a redundant system, the other system cannot start as a standby system. • The error occurred at a startup since the redundant system startup procedure was not followed. (This can be detected from the standby system of the redundant system.) **■Collateral information** • Common information: - • Individual information: - **■Diagnostic timing** • At power-on/At reset	• Replace the tracking cable. If the same error occurs, the cause is a hardware failure of the CPU module. Please consult your local Mitsubishi representative. • Confirm the redundant system startup procedure, and execute a startup again.	RUN: Off ERR.:Flashing CPU Status:Stop	QnPRH
6312	**[CONTROL SYS. DOWN]** • As consistency check data has not transmitted from the control system in a redundant system, the other system cannot start as a standby system. • The error occurred at a startup since the redundant system startup procedure was not followed. (This can be detected from the standby system of the redundant system.) **■Collateral information** • Common information: - • Individual information: - **■Diagnostic timing** • At power-on/At reset	• Replace the tracking cable. If the same error occurs, the cause is a hardware failure of the CPU module. Please consult your local Mitsubishi representative. • Confirm the redundant system startup procedure, and execute a startup again.	RUN: Off ERR.:Flashing CPU Status:Stop	QnPRH
6313	**[CONTROL SYS. DOWN]** The control system detected the error of the system configuration and informed it to the standby system (host system) in the redundant system. **■Collateral information** • Common information: - • Individual information: - **■Diagnostic timing** • At power-on/At reset	Restart the system after checking that the connection between base unit and the system configuration (type/number/parameter of module) are correct.	RUN: Off ERR.:Flashing CPU Status:Stop	QnPRH

Error code	Error and cause	Corrective action	LED status, CPU status	Corresponding CPU
6400	**[PRG. MEM. CLEAR]** The memory copy from control system to standby system was executed, and the program memory was cleared. **■Collateral information** • Common information: - • Individual information: - **■Diagnostic timing** • At execution of the memory copy from control system to standby system	After the memory copy from the control system to the standby system is completed, turn off and then on or reset the system.	RUN: Off ERR.:Flashing CPU Status:Stop	QnPRH
6410	**[MEM. COPY EXE.]** The memory copy from control system to standby system was executed. (This can be detected from the control system of the redundant system.) **■Collateral information** • Common information: - • Individual information: - **■Diagnostic timing** • At execution of the memory copy from control system to standby system	—	RUN: On ERR.:On CPU Status:Continue	QnPRH
6500	**[TRK. PARA. ERROR]** The file register file specified in the tracking setting of "PLC Parameter" does not exist. **■Collateral information** • Common information: File name/Drive name • Individual information: Parameter number **■Diagnostic timing** • At power-on/At reset	Read the individual information of the error using the programming tool. Check the drive name and file name and correct them, or create the specified file register file.	RUN: Off ERR.:Flashing CPU Status:Stop	QnPRH
6501	**[TRK. PARA. ERROR]** The file register range specified in the device detail setting of the tracking setting of "PLC Parameter" exceeded the specified file register file capacity. **■Collateral information** • Common information: File name/Drive name • Individual information: Parameter number **■Diagnostic timing** • At power-on/At reset	Read the individual information of the error using the programming tool, and increase the file register capacity.	RUN: Off ERR.:Flashing CPU Status:Stop	QnPRH

Appendix 1.9 List of error codes (7000 to 10000)

The following table shows the error messages, the error contents and causes, and the corrective actions for the error codes (7000 to 10000).

Error code	Error and cause	Corrective action	LED status, CPU status	Corresponding CPU
7000	**[MULTI CPU DOWN]** • In the operating mode of a multiple CPU system, a CPU error occurred at the CPU where "All station stop by stop error of CPU " was selected. • In a multiple CPU system, a CPU module incompatible with the multiple CPU system was mounted. • Any CPU module other than CPU No.1 was disconnected from the base unit during operation. Or any CPU module other than CPU No.1 was reset. • At power-on/reset, momentary power failure has occurred. **■Collateral information** • Common information: Module No. (CPU No.) • Individual information: - **■Diagnostic timing** • Always	• Read the common information of the error using the programming tool. Check the error in the CPU module, and eliminate the error cause. • Remove the CPU module from the main base unit if it does not support the multiple CPU system configuration. • Check the mounting status of CPU modules other than CPU No.1 and whether the CPU modules were reset. • Check the power supply. • The cause is a hardware failure of the power supply module. Please consult your local Mitsubishi representative.	RUN: Off ERR.:Flashing CPU Status:Stop	Q00/Q01 Qn(H) QnPH QnU
	[MULTI CPU DOWN] In a multiple CPU system, CPU other than CPU No.1 cannot be started up due to stop error of the CPU No.1 at power-on, which occurs to CPU No.2 to No.4. **■Collateral information** • Common information: Module No. (CPU No.) • Individual information: - **■Diagnostic timing** • At power-on/At reset	Read the common information of the error using the programming tool. Check the error in the CPU module, and eliminate the error cause.	RUN: Off ERR.:Flashing CPU Status:Stop	Q00/Q01 Qn(H) QnPH QnU
7002	**[MULTI CPU DOWN]** • There is no response from the target CPU module in a multiple CPU system during initial communication. • In a multiple CPU system, a CPU module incompatible with the multiple CPU system was mounted. **■Collateral information** • Common information: Module No. (CPU No.) • Individual information: - **■Diagnostic timing** • At power-on/At reset	• Reset the CPU module and run it again. If the same error code is displayed again, the cause is a hardware failure of any of the CPU modules. Please consult your local Mitsubishi representative. • Remove the CPU module from the main base unit if it does not support a multiple CPU system configuration. Alternatively, replace the CPU module that does not support a multiple system configuration with the one that does.	RUN: Off ERR.:Flashing CPU Status:Stop	Q00/Q01 Qn(H) QnPH
	[MULTI CPU DOWN] There is no response from the target CPU module in a multiple CPU system during initial communication. **■Collateral information** • Common information: Module No. (CPU No.) • Individual information: - **■Diagnostic timing** • At power-on/At reset	Reset the CPU module and run it again. If the same error code is displayed again, the cause is a hardware failure of any of the CPU modules. Please consult your local Mitsubishi representative.		QnU
7003	**[MULTI CPU DOWN]** There is no response from the target CPU module in a multiple CPU system at initial communication stage. **■Collateral information** • Common information: Module No. (CPU No.) • Individual information: - **■Diagnostic timing** • At power-on/At reset	Reset the CPU module and run it again. If the same error code is displayed again, the cause is a hardware failure of any of the CPU modules. Please consult your local Mitsubishi representative.	RUN: Off ERR.:Flashing CPU Status:Stop	Q00/Q01 Qn(H) QnPH QnU

Error code	Error and cause	Corrective action	LED status, CPU status	Corresponding CPU
7004	**[MULTI CPU DOWN]** In a multiple CPU system, a data error occurred in communication between the CPU modules. **■Collateral information** • Common information: Module No. (CPU No.) • Individual information: - **■Diagnostic timing** • Always	• Check the system configuration to see if modules are mounted in excess of the number of I/O points. • If there is no problem in the system configuration, the cause is a hardware failure of the CPU module. Please consult your local Mitsubishi representative.	RUN: Off ERR.:Flashing CPU Status:Stop	Q00/Q01 QnU
7010	**[MULTI EXE. ERROR]** • In a multiple CPU system, a faulty CPU module was mounted. • In a multiple CPU system, a CPU module incompatible with the multiple CPU system was mounted. (The CPU module compatible with the multiple CPU system was used to detect an error.) • In a multiple CPU system, any of the CPU No. 2 to 4 was reset with power ON. (The CPU whose reset state was cancelled was used to detect an error.) **■Collateral information** • Common information: Module No. (CPU No.) • Individual information: - **■Diagnostic timing** • At power-on/At reset	• Read the common information of the error using the programming tool and replace the faulty CPU module. • Replace the CPU module with the one compatible with the multiple CPU system. • Do not reset any of the No. 2 to 4 CPU modules. • Reset CPU No. 1 and restart the multiple CPU system.	RUN: Off ERR.:Flashing CPU Status:Stop	Q00/Q01 Qn(H) QnPH QnU
	[MULTI EXE. ERROR] In a multiple CPU system, the version of the software package (PPC-DRV-01)[*2] for the PC CPU module is 1.06 or earlier. **■Collateral information** • Common information: Module No. (CPU No.) • Individual information: - **■Diagnostic timing** • At power-on/At reset	Change the software package (PPC-DRV-01)[*2] for the PC CPU module to the version 1.07 or later.		Q00/Q01
	[MULTI EXE. ERROR] The Q172(H)CPU(N) or Q173(H)CPU(N) is mounted on the multiple CPU high-speed main base unit (Q3□DB). (This may result in a module failure.) **■Collateral information** • Common information: Module No. (CPU No.) • Individual information: - **■Diagnostic timing** • At power-on/At reset	Replace the Q172(H)CPU(N) and Q173(H)CPU(N) with the Motion CPU compatible with the multiple CPU high-speed main base unit.		Qn(H) QnPH
	[MULTI EXE. ERROR] The Universal model QCPU (except Q02UCPU) and Q172(H)CPU(N) are mounted on the same base unit. (This may result in a module failure.) **■Collateral information** • Common information: Module No. (CPU No.) • Individual information: - **■Diagnostic timing** • At power-on/At reset	Check the QCPU and Motion CPU that can be used in a multiple CPU system, and change the system configuration.		

Error code	Error and cause	Corrective action	LED status, CPU status	Corresponding CPU
7011	**[MULTI EXE. ERROR]** Either of the following settings was made in a multiple CPU system. • Multiple CPU automatic refresh setting was made for the inapplicable CPU module. • "I/O sharing when using multiple CPUs" setting was made for the inapplicable CPU module. **■Collateral information** • Common information: Module No. (CPU No.) • Individual information: - **■Diagnostic timing** • At power-on/At reset	• Correct the multiple CPU automatic refresh setting. • Correct the "I/O sharing when using multiple CPUs" setting.	RUN: Off ERR.:Flashing CPU Status:Stop	Q00/Q01 QnU
	[MULTI EXE. ERROR] The system configuration for using the multiple CPU high speed transmission function is not met. • The Universal model QCPU (except Q00UCPU, Q01UCPU, Q02UCPU) is not used for the CPU No.1. • The multiple CPU high speed main base unit (Q3□DB) is not used. • Points other than 0 is set to the send range for the CPU module incompatible with the multiple CPU high speed transmission function. • Points other than 0 are set to the auto refresh send range for the multiple CPU high-speed transmission area even though the CPU module does not support the use of this area. **■Collateral information** • Common information: Module No. (CPU No.) • Individual information: - **■Diagnostic timing** • At power-on/At reset	• Change the system configuration to meet the conditions for using the multiple CPU high speed transmission function. • When auto refresh is performed for the multiple CPU high-speed transmission area, set 0 point to the auto refresh send range of the CPU module that does not support the use of this area.		QnU
7013	**[MULTI EXE. ERROR]** The Q172(H)CPU(N) or Q173(H)CPU(N) is mounted to the CPU slot or slots 0 to 2. (This may result in a module failure.) **■Collateral information** • Common information: Module No. (CPU No.) • Individual information: - **■Diagnostic timing** • At power-on/At reset	• Check the QCPU and Motion CPU that can be used in a multiple CPU system, and change the system configuration. • Remove the Motion CPU incompatible with the multiple CPU system.	RUN: Off ERR.:Flashing CPU Status:Stop	QnU
7020	**[MULTI CPU ERROR]** In a multiple CPU system, an error occurred in the CPU module where "All station stop by stop error of CPU" was not selected in the operating mode setting. (The CPU module where no error occurred was used to detect an error.) **■Collateral information** • Common information: Module No. (CPU No.) • Individual information: - **■Diagnostic timing** • Always	Read the common information of the error using the programming tool. Check the error in the CPU module, and eliminate the error cause.	RUN: On ERR.:On CPU Status:Continue	Q00/Q01 Qn(H) QnPH QnU
7030	**[CPU LAY ERROR]** An assignment error occurred in the CPU-mountable slot (CPU slot, I/O slot 0, 1) in excess of the number of CPU modules specified in the multiple CPU setting of "PLC Parameter". **■Collateral information** • Common information: Module No. (CPU No.) • Individual information: - **■Diagnostic timing** • At power-on/At reset	• Set the same value to the number of CPU modules specified in the multiple CPU setting of "PLC Parameter" and the number of mounted CPU modules (including CPU (empty)). • Make the type specified in the I/O assignment setting of "PLC Parameter" consistent with the CPU module configuration.	RUN: Off ERR.:Flashing CPU Status:Stop	Q00J/Q00/Q01 QnU

Error code	Error and cause	Corrective action	LED status, CPU status	Corresponding CPU
7031	**[CPU LAY ERROR]** An assignment error occurred within the range of the number of CPUs specified in the multiple CPU setting of "PLC Parameter". **■Collateral information** • Common information: Module No. (CPU No.) • Individual information: - **■Diagnostic timing** • At power-on/At reset	• Set the same value to the number of CPU modules specified in the multiple CPU setting of "PLC Parameter" and the number of mounted CPU modules (including CPU (empty)). • Make the type specified in the I/O assignment setting of "PLC Parameter" consistent with the CPU module configuration.	RUN: Off ERR.:Flashing CPU Status:Stop	Q00J/Q00/Q01 QnU
7032	**[CPU LAY ERROR]** The number of CPU modules mounted in a multiple CPU system is wrong. **■Collateral information** • Common information: Module No. (CPU No.) • Individual information: - **■Diagnostic timing** • At power-on/At reset	Configure a system so that the number of mountable modules of each CPU module does not exceed the maximum number of mountable modules specified in the specification.	RUN: Off ERR.:Flashing CPU Status:Stop	Q00J/Q00/Q01 QnU
7035	**[CPU LAY ERROR]** The CPU module has been mounted on the inapplicable slot. **■Collateral information** • Common information: Module No. (Slot No.) • Individual information: - **■Diagnostic timing** • At power-on/At reset	• Mount the CPU module on the applicable slot. • Remove the CPU module from the slot where a CPU module cannot be mounted.	RUN: Off ERR.:Flashing CPU Status:Stop	Q00J/Q00/Q01 QnPRH QnU
7036	**[CPU LAY ERROR]** The host CPU No. set by the multiple CPU setting and the host CPU No. determined by the mounting position of the CPU module are not the same. **■Collateral information** • Common information: Module No. (CPU No.) • Individual information: - **■Diagnostic timing** • At power-on/At reset	• Mount the mounting slot of the CPU module correctly. • Correct the host CPU No. set by the multiple CPU setting to the CPU No. determined by the mounting position of the CPU module.	RUN: Off ERR.:Flashing CPU Status:Stop	QnU
8031	**[INCORRECT FILE]** The error of stored file (enabled parameter file) is detected. **■Collateral information** • Common information: - • Individual information: File diagnostic information **■Diagnostic timing** • At power-on/At reset/STOP → RUN/At writing to programmable controller	Write the files shown in SD17 to SD22 (individual information) to the drive shown in SD16 (L) (individual information). Turn off and then on or reset the CPU module. If the same error code is displayed again, the cause is a hardware failure of the CPU module. Please consult your local Mitsubishi representative.	RUN: Off ERR.:Flashing CPU Status:Stop	QnU LCPU
9000	**[F****]** Annunciator (F) turned on. (The "*****" portion of the error message indicates an annunciator number.) **■Collateral information** • Common information: Program error location • Individual information: Annunciator number **■Diagnostic timing** • When instruction executed	Read the individual information of the error using the programming tool to identify the numeric value (annunciator number). Check the program corresponding to the value.	RUN: On ERR.:On/Off*1 USER:On*3 CPU Status:Continue	QCPU LCPU

Error code	Error and cause	Corrective action	LED status, CPU status	Corresponding CPU
9010	**[<CHK>ERR ***-***]** Error detected by the CHK instruction. (The "***" portion of the error message indicates the numbers of contact and coil that have been detected.) **■Collateral information** • Common information: Program error location • Individual information: Failure No. **■Diagnostic timing** • When instruction executed	Read the individual information of the error using the programming tool to identify the numeric value (error number). Check the program corresponding to the value.	RUN: On ERR.:Off USER:On CPU Status:Continue	Qn(H) QnPH QnPRH
9020	**[BOOT OK]** Storage of data onto ROM was completed normally in automatic write to the standard ROM. (The BOOT LED also flashes.) **■Collateral information** • Common information: - • Individual information: - **■Diagnostic timing** • At power-on/At reset	Use the DIP switches to set the valid parameter drive to the standard ROM. Then, switch power on again, and perform boot operation from the standard ROM.	RUN: Off ERR.:Flashing CPU Status:Stop	Qn(H) QnPH QnPRH
9100	**[PID ERROR]** A data error has occurred in control parameter because the sampling time (T_S) setting is out of the range ($T_S \leq 0$). Or, an error has occurred during PID operation. **■Collateral information** • Common information: Program error location • Individual information: - **■Diagnostic timing** • When instruction executed	Check and correct the control parameter setting.	RUN: On ERR.:On CPU Status:Continue	LCPU QnUDV QnUDPV
9101	**[PID ERROR]** A data error has occurred in control parameter or during PID operation because the input filter constant (α) setting is out of the range ($\alpha < 0$ or $100 \leq \alpha$). **■Collateral information** • Common information: Program error location • Individual information: - **■Diagnostic timing** • When instruction executed	Check and correct the control parameter setting.	RUN: On ERR.:On CPU Status:Continue	LCPU QnUDV QnUDPV
9102	**[PID ERROR]** A data error has occurred in control parameter or during PID operation because the proportional gain (K_P) setting is out of the range ($K_P < 0$). **■Collateral information** • Common information: Program error location • Individual information: - **■Diagnostic timing** • When instruction executed	Check and correct the control parameter setting.	RUN: On ERR.:On CPU Status:Continue	LCPU QnUDV QnUDPV
9103	**[PID ERROR]** A data error has occurred in control parameter or during PID operation because the integral time (T_I) setting is out of the range ($T_I < 0$). **■Collateral information** • Common information: Program error location • Individual information: - **■Diagnostic timing** • When instruction executed	Check and correct the control parameter setting.	RUN: On ERR.:On CPU Status:Continue	LCPU QnUDV QnUDPV
9104	**[PID ERROR]** A data error has occurred in control parameter or during PID operation because the derivative gain (K_D) setting is out of the range ($K_D < 0$ or $201 \leq K_D$). **■Collateral information** • Common information: Program error location • Individual information: - **■Diagnostic timing** • When instruction executed	Check and correct the control parameter setting.	RUN: On ERR.:On CPU Status:Continue	LCPU QnUDV QnUDPV

Error code	Error and cause	Corrective action	LED status, CPU status	Corresponding CPU
9105	**[PID ERROR]** A data error has occurred in control parameter or during PID operation because the derivative time (T_D) setting is out of the range (T_D<0). **■Collateral information** • Common information: Program error location • Individual information: - **■Diagnostic timing** • When instruction executed	Check and correct the control parameter setting.	RUN: On ERR.:On CPU Status:Continue	LCPU QnUDV QnUDPV
9106	**[PID ERROR]** The sampling time (T_S) setting is shorter than the operation cycle. **■Collateral information** • Common information: Program error location • Individual information: - **■Diagnostic timing** • When instruction executed	Set the sampling time (T_S) so that it will be longer than the operation cycle.	RUN: On ERR.:On CPU Status:Continue	LCPU QnUDV QnUDPV
9107	**[PID ERROR]** The change rate of process value (ΔPV) is out of the range, -32768 to 32767. **■Collateral information** • Common information: Program error location • Individual information: - **■Diagnostic timing** • When instruction executed	Check the process value.	RUN: On ERR.:On CPU Status:Continue	LCPU QnUDV QnUDPV
9108	**[PID ERROR]** The error (EV) is out of the range, -32768 to 32767. **■Collateral information** • Common information: Program error location • Individual information: - **■Diagnostic timing** • When instruction executed	Check the process value.	RUN: On ERR.:On CPU Status:Continue	LCPU QnUDV QnUDPV
9109	**[PID ERROR]** The integral result is out of the range, -32768 to 32767. **■Collateral information** • Common information: Program error location • Individual information: - **■Diagnostic timing** • When instruction executed	• Check the process value. • Check and correct the control parameter setting.	RUN: On ERR.:On CPU Status:Continue	LCPU QnUDV QnUDPV
9110	**[PID ERROR]** The derivative value has exceeded the limit because of the derivative gain (K_D). **■Collateral information** • Common information: Program error location • Individual information: - **■Diagnostic timing** • When instruction executed	• Check the process value. • Check and correct the control parameter setting.	RUN: On ERR.:On CPU Status:Continue	LCPU QnUDV QnUDPV
9111	**[PID ERROR]** The derivative result is out of the range, -32768 to 32767. **■Collateral information** • Common information: Program error location • Individual information: - **■Diagnostic timing** • When instruction executed	• Check the process value. • Check and correct the control parameter setting.	RUN: On ERR.:On CPU Status:Continue	LCPU QnUDV QnUDPV
9112	**[PID ERROR]** The PID operation result is out of the range, -32768 to 32767. **■Collateral information** • Common information: Program error location • Individual information: - **■Diagnostic timing** • When instruction executed	• Check the process value. • Check and correct the control parameter setting.	RUN: On ERR.:On CPU Status:Continue	LCPU QnUDV QnUDPV

Error code	Error and cause	Corrective action	LED status, CPU status	Corresponding CPU
9113	**[PID ERROR]** The output upper limit setting value is smaller than the output lower limit setting value. **■Collateral information** • Common information: Program error location • Individual information: - **■Diagnostic timing** • When instruction executed	Set the values so that the output upper limit setting value becomes larger than the output lower limit setting value.	RUN: On ERR.:On CPU Status:Continue	LCPU QnUDV QnUDPV
9114	**[PID ERROR]** The input or output change rate alarm setting value is smaller than 0. **■Collateral information** • Common information: Program error location • Individual information: - **■Diagnostic timing** • When instruction executed	Set 0 or larger to the input or output change rate alarm setting value.	RUN: On ERR.:On CPU Status:Continue	LCPU QnUDV QnUDPV
9115	**[PID ERROR]** • The error at the start of auto tuning (step response method) is 150 or less. • The error at the end of auto tuning (step response method) is 1/3 or more of the error at the start of auto tuning. **■Collateral information** • Common information: Program error location • Individual information: - **■Diagnostic timing** • When instruction executed	Check the process value and set value, and execute auto tuning again.	RUN: On ERR.:On CPU Status:Continue	LCPU QnUDV QnUDPV
9116	**[PID ERROR]** The operating direction estimated from the process value at the start of auto tuning (step response method) does not match the actual operating direction output by auto tuning (step response method). **■Collateral information** • Common information: Program error location • Individual information: - **■Diagnostic timing** • When instruction executed	Correct the relationship among the set value, manipulated value for auto tuning (step response method), and process value, and execute auto tuning again.	RUN: On ERR.:On CPU Status:Continue	LCPU QnUDV QnUDPV
9117	**[PID ERROR]** Auto tuning (step response method) does not operate properly. **■Collateral information** • Common information: Program error location • Individual information: - **■Diagnostic timing** • When instruction executed	Set the sampling time so that it will be longer than the operation cycle, or set a larger value for the input filter constant. Change the settings, and execute auto tuning again.	RUN: On ERR.:On CPU Status:Continue	LCPU QnUDV QnUDPV
9118	**[PID ERROR]** The output upper limit (ULV) for auto tuning (limit cycle method) is smaller than the output lower limit (LLV). **■Collateral information** • Common information: Program error location • Individual information: - **■Diagnostic timing** • When instruction executed	Set the values so that the output upper limit (ULV) becomes larger than the output lower limit (LLV).	RUN: On ERR.:On CPU Status:Continue	LCPU QnUDV QnUDPV
9119	**[PID ERROR]** The PV threshold (hysteresis) setting value for auto tuning (limit cycle method) is smaller than 0. **■Collateral information** • Common information: Program error location • Individual information: - **■Diagnostic timing** • When instruction executed	Set 0 or larger to the PV threshold (hysteresis) setting value.	RUN: On ERR.:On CPU Status:Continue	LCPU QnUDV QnUDPV

Error code	Error and cause	Corrective action	LED status, CPU status	Corresponding CPU
9120	**[PID ERROR]** Data in the system area used for auto tuning (limit cycle method) have been overwritten. **■Collateral information** • Common information: Program error location • Individual information: - **■Diagnostic timing** • When instruction executed	Check that data in the system area occupied by the PID instructions are not overwritten.	RUN: On ERR.:On CPU Status:Continue	LCPU QnUDV QnUDPV
9121	**[PID ERROR]** The operation result is abnormal because the auto tuning (limit cycle method) measurement time has exceeded. ($\tau_{ON}>\tau$, $\tau_{ON}<0$, $\tau<0$) **■Collateral information** • Common information: Program error location • Individual information: - **■Diagnostic timing** • When instruction executed	Increase the difference between the output upper limit and lower limit (ULV-LLV) for auto tuning, or set a smaller value to the input filter constant (α) or the PV threshold (SH_{PV}). Then, check the result again.	RUN: On ERR.:On CPU Status:Continue	LCPU QnUDV QnUDPV
9122	**[PID ERROR]** • The proportional gain (K_P) resulted from auto tuning (limit cycle method) is out of the range, 0 to 32767. • The rate of change in the process value (PV) is smaller compared with that in the output value. **■Collateral information** • Common information: Program error location • Individual information: - **■Diagnostic timing** • When instruction executed	Multiply the process value (PV) by ten so that the rate of change in the PV increases during auto tuning.	RUN: On ERR.:On CPU Status:Continue	LCPU QnUDV QnUDPV
9123	**[PID ERROR]** • The integral time (T_I) resulted from auto tuning (limit cycle method) is out of the range, 0 to 32767. • The auto tuning time is longer than necessary. **■Collateral information** • Common information: Program error location • Individual information: - **■Diagnostic timing** • When instruction executed	Increase the difference between the output upper limit and lower limit (ULV-LLV) for auto tuning, or set a smaller value to the input filter constant (α) or the PV threshold (SH_{PV}). Then, check the result again.	RUN: On ERR.:On CPU Status:Continue	LCPU QnUDV QnUDPV
9124	**[PID ERROR]** • The derivative time (T_D) resulted from auto tuning (limit cycle method) is out of the range, 0 to 32767. • The auto tuning time is longer than necessary. **■Collateral information** • Common information: Program error location • Individual information: - **■Diagnostic timing** • When instruction executed	Increase the difference between the output upper limit and lower limit (ULV-LLV) for auto tuning, or set a smaller value to the input filter constant (α) or the PV threshold (SH_{PV}). Then, check the result again.	RUN: On ERR.:On CPU Status:Continue	LCPU QnUDV QnUDPV
10000	**[CONT. UNIT ERROR]** In the multiple CPU system, an error occurred in the CPU module other than the Process CPU and High Performance model QCPU. **■Collateral information** • Common information: - • Individual information: - **■Diagnostic timing** • Always	To check the details of the error, connect a programming tool to the corresponding CPU module.	RUN: Off ERR.:Flashing CPU Status:Continue	Qn(H) QnPH

*1 For the Basic model QCPU, this LED can be turned on/off using the LED control function. (For the High Performance model QCPU, Process CPU, Redundant CPU, Universal model QCPU, and LCPU, the LED can only be turned off.)
User's Manual (Function Explanation, Program Fundamentals) for the CPU module used

*2 The product name is the MELSEC- Q series compatible PC CPU module bus interface driver software package.

*3 The Basic model QCPU does not have the USER LED.

Appendix 1.10 Clearing an error

An error can be cleared as far as the CPU module continues its operation regardless of the error.

1. **Remove the error cause.**
2. **Store the error code to be cleared in SD50.**
3. **Turn on SM50.**
4. **The error is cleared.**

When the error in the CPU module is cleared, the special relay and special register or LEDs relating to the error return to the status before the error. If the same error occurs after clearing the error, the error will be registered to the error history again.
When multiple annunciators are detected, only the first annunciator detected can be cleared. For details on clearing errors, refer to the following.
📖User's Manual (Function Explanation, Program Fundamentals) for the CPU module used

Appendix 1.11 Error codes returned to request source during communication with CPU module

If an error occurs at communication request from a programming tool, intelligent function module, or network system, the CPU module returns the error code to the request source.
This error code is not stored in SD0 because the error is not the one detected by the self-diagnostic function of the CPU module.
When the request source is a programming tool, a message and an error code are displayed on the programming tool.
When the request source is an intelligent function module or network system, the CPU module returns an error code to the request source.

Error code (Hexadecimal)	Error item	Error details	Corrective action	Corresponding CPU
0050_H	MC protocol related error	A code different from the one specified is set to the command/response type of the subheader.	• Check the command data of the MC protocol, etc. • Execute again. If the same error code is displayed, please consult your local Mitsubishi representative.	QCPU LCPU
4000_H	Common error	Serial communication sum check error	• Connect the serial communication cable correctly. • Take measures to reduce noise.	QCPU LCPU
4001_H	Common error	Unsupported request was executed.	• Check the command data of the MC protocol, etc. • Check the CPU module model name selected in the programming tool.	QCPU LCPU
4002_H	Common error	Unsupported request was executed.	• Check the command data of the MC protocol, etc. • Check the CPU module model name selected in the programming tool. • Execute again. If the same error code is displayed, please consult your local Mitsubishi representative.	QCPU LCPU
4003_H	Common error	Command for which a global request cannot be performed was executed.	Check the command data of the MC protocol, etc.	QCPU LCPU
4004_H	Common error	Any operation for the CPU module is prohibited by the system protect function provided against the following events. • The system protect switch is ON. • The CPU module is starting.	• Set the system protect switch of the CPU module to OFF. • Perform operation again after the CPU module has completed starting.	QCPU LCPU
4005_H	Common error	The volume of data handled according to the specified request is too large.	Check the command data of the MC protocol, etc.	QCPU LCPU
4006_H	Common error	Initial communication failed.	• When using serial communication, inquire of the external device manufacturer for support conditions. • When using serial communication, check the CPU module model name selected in the programming tool. • When using Ethernet communication, change the start timing of the communication.	QCPU LCPU
4008_H	Common error	The CPU module is BUSY. (The buffer is not vacant).	After the free time has passed, re-execute the request.	QCPU
4010_H	CPU mode error	Since the CPU module is running, the request contents cannot be executed.	Execute after setting the CPU module to STOP status.	QCPU LCPU
4013_H	CPU mode error	Since the CPU module is not in a STOP status, the request contents cannot be executed.	Execute after setting the CPU module to STOP status.	QCPU LCPU
4021_H	CPU file related error	The specified drive memory does not exist or there is an error.	• Check the specified drive memory status. • After backing up the data in the CPU module, format the CPU memory.	QCPU LCPU
4022_H	CPU file related error	The file with the specified file name or file No. does not exist.	Check the specified file name and file No.	QCPU LCPU

Error code (Hexadecimal)	Error item	Error details	Corrective action	Corresponding CPU
4023_H	CPU file related error	The file name and file No. of the specified file do not match.	Delete the file and then recreate the file.	QCPU LCPU
4024_H	CPU file related error	The specified file cannot be handled by a user.	Do not access the specified file.	QCPU LCPU
4025_H	CPU file related error	The specified file is processing the request from another programming tool.	Forcibly execute the request, or send the request again after the processing being performed ends.	QCPU LCPU
4026_H	CPU file related error	The file password set in advance to the target drive (memory) must be specified.	Specify the file password set in advance, and then access to the drive (memory).	QCPU LCPU
4027_H	CPU file related error	The specified range is larger than the file size range.	Check the specified range and access within that range.	QCPU LCPU
4028_H	CPU file related error	The same file already exists.	Forcibly execute the request, or change the file name and execute the request again.	QCPU LCPU
4029_H	CPU file related error	The specified file capacity cannot be obtained.	Review the specified file capacity, or clean up the specified drive (memory) and execute the request again.	QCPU LCPU
$402A_H$	CPU file related error	The specified file is abnormal.	After backing up the data in the CPU module, format the CPU memory.	QCPU LCPU
$402B_H$	CPU file related error	The request contents cannot be executed in the specified drive memory.	Execute again after setting the CPU module to the STOP status. Execute programmable controller memory arrangement to increase the continuous free space of the drive (memory).	QCPU LCPU
$402C_H$	CPU file related error	The requested operation cannot be executed currently.	Execute again after a while.	QCPU LCPU
4030_H	CPU device specified error	• The specified device name cannot be handled. • The device number of 65536 or greater is specified for the CPU module that does not support extended data register (D) and extended link register (W).	• Check the specified device name. • Use a CPU module that supports extended data register (D) and extended link register (W).	QCPU LCPU
4031_H	CPU device specified error	• The specified device No. is outside the range. • The CPU module cannot handle the specified device.	• Check the specified device No. • Check the device assignment parameters of the CPU module. • Check the specified device name.	QCPU LCPU
4032_H	CPU device specified error	There is a mistake in the specified device qualification. The unusable device name must be specified in MC protocol random reading, random writing (word), monitor registration, and monitor command.	• Check the specified device qualification method. • Check the specified device name.	QCPU LCPU
4033_H	CPU device specified error	Writing cannot be done because the specified device is for system use.	Do not write the data in the specified device, and do not turn on or off.	QCPU
4034_H	CPU device specified error	Cannot be executed since the completion device for the dedicated instruction cannot be turned ON.	Since the completion device for the target station CPU module cannot be turned ON by the SREAD instruction/SWRITE instruction, execute again after setting the operating status of the target station CPU module to the RUN status.	QCPU LCPU
4035_H	CPU device specified error	The request cannot be executed because a specified device range is write-protected from outside the CPU module.	• Do not write data to the specified device. • Check the status of the write-protect function for device data (from outside the CPU module) in the request destination CPU module. Write data again to the device range where is not write-protected. • Disable the write-protect function for device data (from outside the CPU module) in the request destination CPU module and execute the request again.	QnUDV QnUDPV

Error code (Hexadecimal)	Error item	Error details	Corrective action	Corresponding CPU
4036_H	CPU device specified error	The request cannot be executed because the write-protect function for device data (from outside the CPU module) is enabled.	• Correct the specification of the device and execute the request again. Do not use the indirect specification or index modification. Change the device specification from R to ZR and execute the request again. • Disable the write-protect function for device data (from outside the CPU module) in the request destination CPU module and execute the request again.	QnUDV QnUDPV
4037_H	CPU device specified error	Writing to the index register and index-modified devices cannot be executed with a single command because the write-protect function for device data (from outside the CPU module) is enabled.	• Separate the command to write the device data to the index register and each index-modified device separately. • Disable the write-protect function for device data (from outside the CPU module) in the request destination CPU module and execute the request again.	QnUDV QnUDPV
4040_H	Intelligent function module specification error	The request contents cannot be executed in the specified intelligent function module.	Check whether the specified module is the intelligent function module having the buffer memory.	QCPU LCPU
4041_H	Intelligent function module specification error	The access range exceeds the buffer memory range of the specified intelligent function module.	Check the header address and access number of points and access using a range that exists in the intelligent function module.	QCPU LCPU
4042_H	Intelligent function module specification error	The specified intelligent function module cannot be accessed.	• Check that the specified intelligent function module is operating normally. • Check the specified module for a hardware fault.	QCPU LCPU
4043_H	Intelligent function module specification error	The intelligent function module does not exist in the specified position.	Check the I/O No. of the specified intelligent function module.	QCPU LCPU
4044_H	Intelligent function module specification error	A control bus error occurred during access to the intelligent function module.	Check that the specified intelligent function module, other modules, and base units have no hardware failure.	QCPU
		A system bus error occurred during access to the special function module.	Check that the specified special function module, other modules, and LA1S extension base unit have no hardware failure.	LCPU
4048_H	Intelligent function module specification error	An error occurred when the buffer memory of the MELSECNET, MELSECNET/B local station data link module was accessed.	Do not access the buffer memory of the MELSECNET, MELSECNET/B local station data link module since the access is prohibited.	QCPU
		An error occurred when the buffer memory of the MELSECNET(Ⅱ)/B local station module was accessed.	Do not access the buffer memory of the MELSECNET(Ⅱ)/B local station module.	LCPU
4050_H	Protect error	The request contents cannot be executed because the write protect switch on the memory card or the protect switch on the SD memory card is on.	Turn off the write protect switch or the protect switch.	QCPU LCPU
4051_H	Protect error	The specified device memory cannot be accessed.	Check the following and make it countermeasures. • Is the memory one that can be used? • Is the specified drive memory correctly installed?	QCPU LCPU
4052_H	Protect error	The specified file attribute is read only so the data cannot be written.	Do not write data in the specified file. Or change the file attribute.	QCPU LCPU
4053_H	Protect error	An error occurred when writing data to the specified drive memory.	Check the specified drive memory. Or reexecute write after changing the corresponding drive memory.	QCPU LCPU
4054_H	Protect error	An error occurred when deleting the data in the specified drive memory.	Check the specified drive memory. Or re-erase after replacing the corresponding drive memory.	QCPU LCPU

Error code (Hexadecimal)	Error item	Error details	Corrective action	Corresponding CPU
4060_H	Online registration error	The online debug function (such as online change, sampling trace, and monitoring condition setting) and the data logging function are being executed with another programming tool.	• Finish the operation of another programming tool and then execute the function. • If the operation of another programming tool is on hold, resume with that programming tool to complete the operation, and then execute the function again.	QCPU LCPU
4061_H	Online registration error	Communication of the online debug function was unsuccessful.	• Register an online debug function (such as online change, sampling trace, and monitoring condition setting) and then establish a communication. • Execute again after checking the communication route such as the communication cable.	QCPU LCPU
4063_H	Online registration error	The registered number of locked files exceeded the maximum value.	Finish the file access from another programming tool, and then execute again.	QCPU LCPU
4064_H	Online registration error	Set data of the online debug function (such as the online change/sampling trace/settings of monitor condition), data logging function, or realtime monitor function are incorrect.	• Check the set data of the online debug function (such as the online change/sampling trace/settings of monitor condition), data logging function, and realtime monitor function. • Execute again after checking the communication route such as the communication cable.	QCPU LCPU
4065_H	Online registration error	The device allocation information differs from the parameter.	Check the device assignment parameters of the CPU module or the device assignment of the request data.	QCPU
4066_H	Online registration error	The specified file password is incorrect.	Check and specify the correct file password.	QCPU LCPU
4067_H	Online registration error	Monitor communication was unsuccessful.	• Check the system area capacity of the user setting specified when "format PLC memory" is executed. • Execute again after checking the communication route such as the communication cable.	QCPU LCPU
4068_H	Online registration error	Operation is disabled because it is being performed with another programming tool.	Finish the operation of another programming tool and then execute again.	QCPU LCPU
$406A_H$	Online registration error	The drive (memory) number that cannot be handled (other than 0 to 4) was specified.	Check the specified drive and specify the correct drive.	QCPU LCPU
$406B_H$	Online registration error	Online operation was interrupted due to a CPU module error.	Check the status of the CPU module with the PLC diagnostics function, identify the error, and take a corrective action referring to the troubleshooting section.	QnUDV QnUDPV
4070_H	Circuit inquiry error	The program not yet corrected and the one corrected by online program change are different.	Read the program from the CPU module to match it with that of the programming tool, and then execute online change again.	QCPU LCPU
4080_H	Other error	Request data error	Check the request data that has been specified.	QCPU LCPU
4081_H	Other error	The sort subject cannot be detected.	Check the data to be searched.	QCPU LCPU
4082_H	Other error	The specified command is executing and therefore cannot be executed.	Complete the processing for a request from another programming tool and then execute the command again.	QCPU LCPU
4083_H	Other error	An attempt was made to perform operation for the program not registered to the parameters.	Register the program to the parameters.	QCPU LCPU
4084_H	Other error	The specified pointer (P or I) does not exist.	Check if the specified pointer (P or I) exists in the data.	QCPU LCPU
4085_H	Other error	The pointer (P or I) cannot be specified because the program is not specified in parameter.	Register the program to be executed in parameter first, and specify the pointer (P or I).	QCPU
4086_H	Other error	The specified pointer (P or I) has already been added.	Check and correct the pointer number to be added.	QCPU LCPU

Error code (Hexadecimal)	Error item	Error details	Corrective action	Corresponding CPU
4087_H	Other error	The number of pointers (P or I) exceeds its limit.	Check and correct the specified pointer (P or I).	QCPU LCPU
4088_H	Other error	• The specified step number is not at the head of the instruction. • The program differs from that stored in the CPU module.	• Check and correct the specified step No. • Read the program from the CPU module to match it with that of the programming tool, and then execute online change again.	QCPU LCPU
4089_H	Other error	An attempt was made to insert/delete the END instruction by online program change.	• Check the specified program file contents. • Write the program after setting the CPU module to the STOP status.	QCPU LCPU
$408A_H$	Other error	The file capacity exceeded after the online change was executed.	• Check the capacity of the specified program file. • Write the program after setting the CPU module to the STOP status.	QCPU LCPU
$408B_H$	Other error	The remote request cannot be executed.	• Re-execute after the CPU module is in a status where the mode request can be executed. • For remote operation, set the parameter to "Enable remote reset".	QCPU LCPU
$408C_H$	Other error	An attempt was made to remote-start the program, which uses the CHK instruction, as a low speed program.	The program including the CHK instruction cannot be executed at low speed. Execute again after checking the program.	Qn(H) QnPH QnPRH
$408D_H$	Other error	The instruction code that cannot be handled exists.	• Check whether the model of the used CPU module is correct or not. • The program where online change was attempted includes the instruction that cannot be handled by the CPU module specified for the project. Check the program and delete the instruction.	QCPU LCPU
$408E_H$	Other error	• The write step is illegal. • The program differs from that stored in the CPU module.	• Write the program after setting the CPU module to the STOP status. • The starting position of online program change is not specified with the correct program step No. Check whether the programming tool supports the model and version of the CPU module that is specified for the project. • Read the program from the CPU module to match it with that of the programming tool, and then execute online change again.	QCPU LCPU
$40A0_H$	SFC device specification error	A block No. outside the range was specified.	Check the setting contents and make a correction.	QCPU LCPU
$40A1_H$	SFC device specification error	A number of blocks that exceeds the range was specified.	Check the number of settings and make a correction.	QCPU LCPU
$40A2_H$	SFC device specification error	A step No. that is outside the range was specified.	Check the setting contents and make a correction.	QCPU LCPU
$40A3_H$	SFC device specification error	Step range limit exceeded	Check the number of settings and make a correction.	QCPU LCPU
$40A4_H$	SFC device specification error	The specified sequence step No. is outside the range.	Check the setting contents and make a correction.	Qn(H) QnPH QnPRH
$40A5_H$	SFC device specification error	The specified device is outside the range.	Check the number of settings and make a correction.	Qn(H) QnPH QnPRH
$40A6_H$	SFC device specification error	The block specification pattern and step specification pattern were wrong.	Check the setting contents and make a correction.	Qn(H) QnPH QnPRH
$40B0_H$	SFC file related error	The drive (memory) specified in SFC file operation is wrong.	Check the setting contents and make a correction.	QCPU LCPU
$40B1_H$	SFC file related error	The SFC program specified in SFC file operation does not exist.	Check the specified file name and make a correction.	QCPU LCPU
$40B2_H$	SFC file related error	The program specified in SFC file operation is not an SFC program.	Check the specified file name and make a correction.	QCPU LCPU

Error code (Hexadecimal)	Error item	Error details	Corrective action	Corresponding CPU
$40B3_H$	SFC file related error	Using online program change of SFC, an attempt was made to execute rewrite operation of the "SFC dedicated instruction", such as the "STEP start instruction or transition start instruction", that shows an SFC chart. (SFC dedicated instruction cannot be written during RUN.)	Switch the CPU module to the STOP status, and write the program.	Qn(H) QnPH QnPRH
$40B4_H$	SFC file related error	Active blocks cannot be changed or deleted.	After inactivating the target block, change or delete the block by executing the online change.	QCPU LCPU
$40B5_H$	SFC file related error	The number of SFC steps after the program modification exceeds the maximum number.	Reduce the number of SFC steps to be added by executing the online change.	QCPU LCPU
$40B6_H$	SFC file related error	The specified block does not exist.	• Execute the verify with PLC function for the unedited SFC program and the SFC program in the CPU module to check for the consistency. Then edit the SFC program and execute the online change. • Edit the SFC program read from the CPU module by executing the read from PLC function, and execute the online change.	QCPU LCPU
$40B7_H$	SFC file related error	The online change cannot be executed for the standby type SFC program.	Execute the online change (SFC inactive block) for the scan type SFC program.	QCPU LCPU
$40B8_H$	SFC file related error	The device number of the SFC data device is outside the range.	Review the block data setting.	QCPU LCPU
$40B9_H$	SFC file related error	The modified SFC program is incorrect.	Review the communication route (such as the cable connection status).	QCPU LCPU
$40BA_H$	SFC file related error	The online change for each block cannot be executed for a SFC block whose number of sequence steps exceeds 32K.	• When executing the online change for each block, set the number of sequence steps of the target SFC block to 32K or less. • Switch the CPU module to the STOP status, and write the SFC program by executing the write to PLC function.	QCPU LCPU
$40BB_H$	SFC file related error	The online change cannot be executed because the data has just written or a program execution error exists.	• Execute the online change (SFC inactive block) after switching the CPU module from STOP to RUN. (To change the program during STOP, write the program by executing the write to PLC function.) • If a program execution error (error code: 2504) exists, set the parameters so that the number of SFC programs to be set as the scan execution type program is one or none.	QCPU LCPU
4100_H	Other error	CPU module hardware fault	Change the CPU module.	QCPU LCPU
4101_H	Other error	Serial communication connection was executed for a different CPU module series.	Check the CPU module series.	QCPU LCPU
4102_H	Other error	An attempt was made to erase the Flash ROM during use of the file register.	Execute again after setting the CPU module to the STOP status.	QCPU LCPU
4103_H	Other error	The instruction written during RUN is wrong or illegal.	Execute online program change again, or write the program after setting the CPU module to the STOP status.	QCPU LCPU
4105_H	Other error	CPU module internal memory hardware fault	Change the CPU module.	Qn(H) QnPH QnPRH
4106_H	Other error	The command cannot be executed since the CPU module is performing system initialization processing.	Execute the operation again after the CPU module has started.	Qn(H) QnPH QnPRH
4107_H	Other error	An attempt was made to perform the operation of the function unavailable for the target CPU module model name.	Do not execute the function unsupported by the target CPU module.	Qn(H) QnPH QnPRH
4108_H	Other error	The CPU module detected that data was overwritten while device data was being read.	Overwrite the device data and read the data again.	QCPU LCPU

Error code (Hexadecimal)	Error item	Error details	Corrective action	Corresponding CPU
4109_H	Other error	The specified operation cannot be executed since the monitoring, set the condition for other application in same computer, is in execution.	Execute the request again after deregistering the monitoring condition on the same screen.	QCPU LCPU
$410A_H$	Other error	The specified command cannot be executed because of online program change.	Execute the request again after the online program change.	QCPU LCPU
$410B_H$	Other error	The registration of monitoring condition was canceled because of online program change.	Execute the registration of monitoring condition again after the online program change.	QCPU LCPU
$410C_H$	Other error	Writing to the specified data is not supported.	• Check that the version of the programming tool used is correct. • Check the settings and make a correction.	QCPU
$410D_H$	Other error	When the program cache memory was read, it was detected that the program memory data had been overwritten.	• Write the file containing the overwritten data to the program cache memory again. • Turn off and then on or reset the system, and transfer the program memory data to the program cache memory.	QCPU LCPU
4110_H	CPU module error	Since the CPU module is in a stop error status, it cannot execute the request.	Execute the request again after resetting the CPU module.	Qn(H) QnPH QnPRH
4111_H	CPU module error	The requested operation cannot be performed since the other CPU modules have not yet started in the multiple CPU system.	Execute the request again after the other CPU modules have started.	Qn(H) QnPH QnPRH
4121_H	File-related error	The specified drive (memory) or file does not exist.	Execute again after checking the specified drive (memory) or file.	QCPU LCPU
4122_H	File-related error	The specified drive (memory) or file does not exist.	Execute again after checking the specified drive (memory) or file.	QCPU LCPU
4123_H	File-related error	The specified drive (memory) is abnormal.	Execute programmable controller memory format to make the drive (memory) normal. In the case of the Flash ROM, check the data to be written to the Flash ROM, and write them to the Flash ROM.	QCPU LCPU
4124_H	File-related error	The specified drive (memory) is abnormal.	Execute programmable controller memory format to make the drive (memory) normal. In the case of the Flash ROM, check the data to be written to the Flash ROM, and write them to the Flash ROM.	QCPU LCPU
4125_H	File-related error	The specified drive (memory) or file is performing processing.	Execute again after a while.	QCPU LCPU
4126_H	File-related error	The specified drive (memory) or file is performing processing.	Execute again after a while.	QCPU LCPU
4127_H	File-related error	File password mismatch	Execute again after checking the file password.	QCPU LCPU
4128_H	File-related error	File password mismatch with copy destination	Execute again after checking the file password.	QCPU LCPU
4129_H	File-related error	Cannot be executed since the specified drive (memory) is ROM.	Execute again after changing the target drive (memory).	QCPU LCPU
$412A_H$	File-related error	Cannot be executed since the specified drive (memory) is ROM.	Execute again after changing the target drive (memory).	QCPU LCPU
$412B_H$	File-related error	The specified drive (memory) is write-inhibited.	Execute again after changing the write inhibit condition or drive (memory).	QCPU LCPU
$412C_H$	File-related error	The specified drive (memory) is write-inhibited.	Execute again after changing the write inhibit condition or drive (memory).	QCPU LCPU
$412D_H$	File-related error	The specified drive (memory) does not have enough free space.	Execute again after increasing the free space of the drive (memory).	QCPU LCPU
$412E_H$	File-related error	The specified drive (memory) does not have enough free space.	Execute again after increasing the free space of the drive (memory).	QCPU LCPU
$412F_H$	File-related error	The drive (memory) capacity differs between the drive (memory) copy destination and copy source.	Execute again after checking the drive (memory) copy destination and copy source.	QCPU LCPU

Error code (Hexadecimal)	Error item	Error details	Corrective action	Corresponding CPU
4130_H	File-related error	The drive (memory) type differs between the drive (memory) copy destination and copy source.	Execute again after checking the drive (memory) copy destination and copy source.	QCPU LCPU
4131_H	File-related error	The file name of the file copy destination is the same as that of the copy source.	Execute again after checking the file names.	QCPU LCPU
4132_H	File-related error	The specified number of files does not exist.	Execute again after checking the specified data.	QCPU LCPU
4133_H	File-related error	The specified drive (memory) has no free space.	Execute again after increasing the free space of the drive (memory).	QCPU LCPU
4134_H	File-related error	The attribute specification data of the file is wrong.	Execute again after checking the specified data.	QCPU LCPU
4135_H	File-related error	The date/time data of the peripheral device (personal computer) is beyond the range.	Execute again after checking the clock setting of the peripheral device (personal computer).	QCPU LCPU
4136_H	File-related error	The specified file already exists.	Execute again after checking the specified file name.	QCPU LCPU
4137_H	File-related error	The specified file is read-only.	Execute again after changing the condition of the specified file.	QCPU LCPU
4138_H	File-related error	Simultaneously accessible files exceeded the maximum.	Execute again after decreasing file operations.	QCPU LCPU
4139_H	File-related error	The size of the specified file has exceeded that of the existing file.	Execute again after checking the size of the specified file.	QCPU LCPU
$413A_H$	File-related error	The specified file has exceeded the already existing file size.	Execute again after checking the size of the specified file.	QCPU LCPU
$413B_H$	File-related error	The same file was simultaneously accessed from different programming tools.	Execute again after a while.	QCPU LCPU
$413C_H$	File-related error	The specified file is write-inhibited.	Execute again after changing the file condition.	QCPU LCPU
$413D_H$	File-related error	The specified file capacity cannot be secured.	Execute again after increasing the capacity of the specified drive (memory).	QCPU LCPU
$413E_H$	File-related error	Operation is disabled for the specified drive (memory).	Execute again after changing the target drive (memory).	QCPU LCPU
$413F_H$	File-related error	The file is inhibited from write to the standard RAM.	Execute again after changing the specified drive (memory).	QCPU LCPU
$414A_H$	Intelligent function module specification error	Operation was executed for the intelligent function module of the non-control group in the multiple CPU system.	Execute the operation again from the control CPU of the target module.	QCPU
$414C_H$	Intelligent function module specification error	The I/O address of the specified CPU module is wrong.	Execute again after checking the I/O address of the specified CPU module.	QCPU LCPU
4150_H	File-related error	An attempt was made to format the drive protected by the system.	Do not format the target drive (memory) as it cannot be formatted.	QCPU LCPU
4151_H	File-related error	An attempt was made to delete the file protected by the system.	Do not delete the target file as it cannot be deleted.	QCPU LCPU
4160_H	Online registration error	The registered number of forced inputs/outputs exceeded the maximum value.	Deregister the unused forced inputs/outputs.	QCPU LCPU
4165_H	Online registration error	The multiple-block online change system file does not exist.	Execute again after securing the area that enables multiple-block online change at the time of programmable controller memory format.	QCPU
4166_H	Online registration error	Online change (files) is disabled because it is being executed from the same source.	Due to unsuccessful online change (files) previously occurred for some reason (example: communication failure), the processing is kept incomplete. Forcibly perform another online change (files).	Qn(H) QnPH QnPRH
4167_H	Online registration error	Online change (files) is disabled because it is being performed from another source.	Due to unsuccessful online change (files) from another source previously occurred for some reason (example: communication failure), the processing is kept incomplete. If online change (files) is not being performed by any other programming tool, forcibly perform another online change (files).	Qn(H) QnPH QnPRH

Error code (Hexadecimal)	Error item	Error details	Corrective action	Corresponding CPU
4168_H	Online registration error	The number of registered executional conditioned device test settings exceeds 32.	Disable the executional conditioned device test settings registered in the CPU module, or decrease the number of test settings registered for the same step number.	QCPU LCPU
4169_H	Online registration error	No executional conditioned device test settings are registered.	Check the number of executional conditioned device test settings registered in the CPU module, and disable the settings.	QCPU LCPU
$416A_H$	Online registration error	The specified executing condition does not exist. (Executional conditioned device test)	Check whether the specified executing conditions (program, step No. operation timing, device name) specified when the settings were disabled are registered.	QCPU LCPU
$416B_H$	Online registration error	The specified program is SFC program. (Executional conditioned device test)	Change the program specified when the executional conditioned device test settings are registered or disabled.	QCPU LCPU
4170_H	Ethernet I/F Error	The password is wrong.	Check the specified remote password, then execute the lock/unlock processing of the remote password again.	QCPU LCPU
4171_H	Ethernet I/F Error	The port for communication use is at remote password locking status.	Execute communication after unlocking the remote password processing.	QCPU LCPU
4174_H	Ethernet I/F Error	Requested for a wrong module to unlock remote password.	• Stop transmitting from several modules simultaneously when setting a remote password and using User Datagram Protocol (UDP) in MELSOFT connection. • The MELSOFT connection can be used with Transmission Control protocol (TCP) when setting a remote password.	QCPU LCPU
4176_H	Ethernet I/F Error	Communication error occurred in direct connection.	• Do not specify the direct connection when using other connection setting. • Do not turn off the CPU power during communication, reset the power, and plug out the cable in direct connection.	QCPU LCPU
4178_H	Ethernet I/F Error	• File operation is disabled because the File Transfer Protocol (FTP) function is in operation. • Online operation requiring a file access is performed with a programming tool while the File Transfer Protocol (FTP) function is in operation.	Retry after the operation for FTP function is completed.	QCPU LCPU
4180_H	Ethernet I/F Error	System error. (The setting data in OS is abnormal.)	• Check that the power supply module and the CPU module are mounted/connected properly. • Check that the system is operating within the general specifications of the CPU module. • Check whether the power capacity is sufficient. • Reset the CPU module. • Execute again. If the same error code is displayed, the cause is a hardware failure of the CPU module. Please consult your local Mitsubishi representative.	QnU[*2] LCPU[*2]

Error code (Hexadecimal)	Error item	Error details	Corrective action	Corresponding CPU
4181_H	Ethernet I/F Error	Transmission to the receiving modules is unsuccessful.	• Check the external device operation. • Check the status of devices (such as cables, hubs, and routers) on the line to the external devices. • When another Ethernet function is executed simultaneously, reconsider the Ethernet function. • When the line is congested with packets, set a longer time for the execution interval or communication timeout time. • The receiving module may have no free space in receive area (TCP window size is small). Check whether the receiving module processes receive data, or whether the CPU module does not send unnecessary data. • Check whether the settings of the subnet mask pattern and the default router IP address of the CPU module and the receiving modules are correct, or whether the class of the IP address is correct. • Check whether the IP address specified as target is correct.	QnU*2 LCPU*2
4182_H	Ethernet I/F Error	Communication with receiving modules caused a timeout error.	• Check the external device operation. • Check the status of devices (such as cables, hubs, and routers) on the line to the external devices. • Revise the scan time of the communication target. • When the model of the communication target is the one supported by the service processing setting, revise the setting. • When another Ethernet function is executed simultaneously, reconsider the Ethernet function. • When the line is congested with packets, set a longer time for the execution interval or communication timeout time. • Check whether the target device supports the function executed.	QnU*2 LCPU*2
4183_H	Ethernet I/F Error	Communication with receiving modules was interrupted.	• Check the external device operation. • Check the status of devices (such as cables, hubs, and routers) on the line to the external devices. • This error may occur when Forced connection invalidation is executed to the connection under communication. In this case, clear the error because the error is not problematic.	QnU*2 LCPU*2
4184_H	Ethernet I/F Error	• Communication processing buffer has run out of space due to consecutive reception of request messages using the MC protocol. • Communication processing buffer has run out of space because received data read is not performed or cannot keep up with the volume. • Communication processing is disabled due to insufficient space in the communication processing buffer.	• For MC protocol, send a request after receiving a response to the previous request. • For socket communication, enable received data read. • For socket communication, decrease the number of data sent from the target device.	QnU*2 LCPU*2
4185_H	Ethernet I/F Error	• Connection to the target device is disconnected before sending a response using the MC protocol. • Connection to the target device is disconnected during communication.	• For MC protocol, keep the connection until a response is sent. • Keep the connection until a sequence of communication is completed. • Other error such as 4184_H may be the cause. If any other error has occurred, take corrective action of that error.	QnU*2 LCPU*2

Error code (Hexadecimal)	Error item	Error details	Corrective action	Corresponding CPU
4186_H	Ethernet I/F Error	System error (The argument data in OS is abnormal.)	• Check that the power supply module and the CPU module are mounted/connected properly. • Check that the system is operating within the general specifications of the CPU module. • Check whether the power capacity is sufficient. • Reset the CPU module. • Execute again. If the same error code is displayed, the cause is a hardware failure of the CPU module. Please consult your local Mitsubishi representative.	QnU*2 LCPU*2
4187_H	Ethernet I/F Error	System error (The wait processing in OS is abnormal.)	• Check that the power supply module and the CPU module are mounted/connected properly. • Check that the system is operating within the general specifications of the CPU module. • Check whether the power capacity is sufficient. • Reset the CPU module. • Execute again. If the same error code is displayed, the cause is a hardware failure of the CPU module. Please consult your local Mitsubishi representative.	QnU*2 LCPU*2
4188_H	Ethernet I/F Error	System error (The data length in OS is abnormal.)	• Check that the power supply module and the CPU module are mounted/connected properly. • Check that the system is operating within the general specifications of the CPU module. • Check whether the power capacity is sufficient. • Reset the CPU module. • Execute again. If the same error code is displayed, the cause is a hardware failure of the CPU module. Please consult your local Mitsubishi representative.	QnU*2 LCPU*2
4189_H	Ethernet I/F Error	System error (The protocol information in OS is abnormal.)	• Check that the power supply module and the CPU module are mounted/connected properly. • Check that the system is operating within the general specifications of the CPU module. • Check whether the power capacity is sufficient. • Reset the CPU module. • Execute again. If the same error code is displayed, the cause is a hardware failure of the CPU module. Please consult your local Mitsubishi representative.	QnU*2 LCPU*2
$418A_H$	Ethernet I/F Error	System error (The address data of communicating module in OS is abnormal.)	• Check that the power supply module and the CPU module are mounted/connected properly. • Check that the system is operating within the general specifications of the CPU module. • Check whether the power capacity is sufficient. • Reset the CPU module. • Execute again. If the same error code is displayed, the cause is a hardware failure of the CPU module. Please consult your local Mitsubishi representative.	QnU*2 LCPU*2
$418B_H$	Ethernet I/F Error	System error (The protocol information in OS is abnormal.)	• Check that the power supply module and the CPU module are mounted/connected properly. • Check that the system is operating within the general specifications of the CPU module. • Check whether the power capacity is sufficient. • Reset the CPU module. • Execute again. If the same error code is displayed, the cause is a hardware failure of the CPU module. Please consult your local Mitsubishi representative.	QnU*2 LCPU*2

Error code (Hexadecimal)	Error item	Error details	Corrective action	Corresponding CPU
$418C_H$	Ethernet I/F Error	System error (The protocol specification processing in OS is abnormal.)	• Check that the power supply module and the CPU module are mounted/connected properly. • Check that the system is operating within the general specifications of the CPU module. • Check whether the power capacity is sufficient. • Reset the CPU module. • Execute again. If the same error code is displayed, the cause is a hardware failure of the CPU module. Please consult your local Mitsubishi representative.	QnU*2 LCPU*2
$418D_H$	Ethernet I/F Error	System error (The typed data in OS is abnormal.)	• Check that the power supply module and the CPU module are mounted/connected properly. • Check that the system is operating within the general specifications of the CPU module. • Check whether the power capacity is sufficient. • Reset the CPU module. • Execute again. If the same error code is displayed, the cause is a hardware failure of the CPU module. Please consult your local Mitsubishi representative.	QnU*2 LCPU*2
$418E_H$	Ethernet I/F Error	System error (The expedited data processing in OS is abnormal.)	• Check that the power supply module and the CPU module are mounted/connected properly. • Check that the system is operating within the general specifications of the CPU module. • Check whether the power capacity is sufficient. • Reset the CPU module. • Execute again. If the same error code is displayed, the cause is a hardware failure of the CPU module. Please consult your local Mitsubishi representative.	QnU*2 LCPU*2
$418F_H$, 4190_H	Ethernet I/F Error	System error (The protocol information in OS is abnormal.)	• Check that the power supply module and the CPU module are mounted/connected properly. • Check that the system is operating within the general specifications of the CPU module. • Check whether the power capacity is sufficient. • Reset the CPU module. • Execute again. If the same error code is displayed, the cause is a hardware failure of the CPU module. Please consult your local Mitsubishi representative.	QnU*2 LCPU*2
4191_H	Ethernet I/F Error	System error (The address data of communicating module in OS is abnormal.)	• Check that the power supply module and the CPU module are mounted/connected properly. • Check that the system is operating within the general specifications of the CPU module. • Check whether the power capacity is sufficient. • Reset the CPU module. • Execute again. If the same error code is displayed, the cause is a hardware failure of the CPU module. Please consult your local Mitsubishi representative.	QnU*2 LCPU*2
4192_H	Ethernet I/F Error	System error (The host module address processing in OS is abnormal.)	• Check that the power supply module and the CPU module are mounted/connected properly. • Check that the system is operating within the general specifications of the CPU module. • Check whether the power capacity is sufficient. • Reset the CPU module. • Execute again. If the same error code is displayed, the cause is a hardware failure of the CPU module. Please consult your local Mitsubishi representative.	QnU*2 LCPU*2

Error code (Hexadecimal)	Error item	Error details	Corrective action	Corresponding CPU
4193_H to 4196_H	Ethernet I/F Error	System error (The transmission processing in OS is abnormal.)	• Check that the power supply module and the CPU module are mounted/connected properly. • Check that the system is operating within the general specifications of the CPU module. • Check whether the power capacity is sufficient. • Reset the CPU module. • Execute again. If the same error code is displayed, the cause is a hardware failure of the CPU module. Please consult your local Mitsubishi representative.	QnU*2 LCPU*2
4197_H, 4198_H	Ethernet I/F Error	System error (The connection processing in OS is abnormal.)	• Check that the power supply module and the CPU module are mounted/connected properly. • Check that the system is operating within the general specifications of the CPU module. • Check whether the power capacity is sufficient. • Reset the CPU module. • Execute again. If the same error code is displayed, the cause is a hardware failure of the CPU module. Please consult your local Mitsubishi representative.	QnU*2 LCPU*2
4199_H	Ethernet I/F Error	System error (The connection termination processing is abnormal.)	• Check that the power supply module and the CPU module are mounted/connected properly. • Check that the system is operating within the general specifications of the CPU module. • Check whether the power capacity is sufficient. • Reset the CPU module. • Execute again. If the same error code is displayed, the cause is a hardware failure of the CPU module. Please consult your local Mitsubishi representative.	QnU*2 LCPU*2
$419A_H$	Ethernet I/F Error	System error (The connection processing in OS is abnormal.)	• Check that the power supply module and the CPU module are mounted/connected properly. • Check that the system is operating within the general specifications of the CPU module. • Check whether the power capacity is sufficient. • Reset the CPU module. • Execute again. If the same error code is displayed, the cause is a hardware failure of the CPU module. Please consult your local Mitsubishi representative.	QnU*2 LCPU*2
$419B_H$	Ethernet I/F Error	System error (The connection termination processing is abnormal.)	• Check that the power supply module and the CPU module are mounted/connected properly. • Check that the system is operating within the general specifications of the CPU module. • Check whether the power capacity is sufficient. • Reset the CPU module. • Execute again. If the same error code is displayed, the cause is a hardware failure of the CPU module. Please consult your local Mitsubishi representative.	QnU*2 LCPU*2
$419C_H$, $419D_H$	Ethernet I/F Error	System error (The processing order in OS is abnormal.)	• Check that the power supply module and the CPU module are mounted/connected properly. • Check that the system is operating within the general specifications of the CPU module. • Check whether the power capacity is sufficient. • Reset the CPU module. • Execute again. If the same error code is displayed, the cause is a hardware failure of the CPU module. Please consult your local Mitsubishi representative.	QnU*2 LCPU*2
$419E_H$	Ethernet I/F Error	Connection to the module was unsuccessful or interrupted.	• Check the external device operation. • Check the status of devices (such as cables, hubs, and routers) on the line to the external devices.	QnU*2 LCPU*2

Error code (Hexadecimal)	Error item	Error details	Corrective action	Corresponding CPU
$419F_H$	Ethernet I/F Error	System error (The I/O control processing is abnormal.)	• Check that the power supply module and the CPU module are mounted/connected properly. • Check that the system is operating within the general specifications of the CPU module. • Check whether the power capacity is sufficient. • Reset the CPU module. • Execute again. If the same error code is displayed, the cause is a hardware failure of the CPU module. Please consult your local Mitsubishi representative.	QnU*2 LCPU*2
$41A0_H$	Ethernet I/F Error	Data cannot be sent because the receive area of the external device does not have enough free space.	• Send the data again a little while later. • Check the external device operation. • Check whether the external device processes receive data. • Check whether the CPU module does not send unnecessary data. • Check the size and frequency of sent data and reduce the amount of send data. • To send data again, close the connection and discard data. Then, re-open the connection and send data.	QnU*2 LCPU*2
$41A1_H$	Ethernet I/F Error	The port number setting for the CPU module is incorrect.	Correct the port number.	QnU*2 LCPU*2
$41A2_H$	Ethernet I/F Error	The port number setting for the target device is invalid.	Correct the port number.	QnU*2 LCPU*2
$41A3_H$	Ethernet I/F Error	• The own station port number same as that of the MC protocol has been specified in TCP/IP. • In TCP/IP, connection with the same own station port number and same communication destination port number has been used for the same communication destination.	• Specify a port number different from that used in the MC protocol. • Change the port number of the CPU module or external device.	QnU*2 LCPU*2
$41A4_H$	Ethernet I/F Error	• For UDP/IP, the same Host station port No. is specified as MC protocol. • For UDP/IP, the specified host station No. is duplicated.	• Specify a port number that is not duplicated with that of MC protocol. • Correct the port number of the CPU module to avoid duplication.	QnU*2 LCPU*2
$41A5_H$	Ethernet I/F Error	The IP address setting of the target device for OPEN processing is invalid.	Correct the IP address. Specify A, B, or C for the class.	QnU*2 LCPU*2
$41A6_H$	Ethernet I/F Error	Connection was not established in OPEN processing for TCP connection.	• Check the external device operation. • Check OPEN processing of the target device. • Correct the port number of the CPU module and the IP address, port number, and open processing method of the target device. • Check whether the cables are securely connected.	QnU*2 LCPU*2
$41A8_H$	Ethernet I/F Error	Data length is out of permissible range. (For the Built-in Ethernet port QCPU, the length should be 2046 bytes if the serial number (first five digits) is "12051" or earlier and 10238 bytes if the serial number is "12052" or later.)	• Correct the data length. • If the data is longer than the range, split the data and send them. • When the data length is 2047 to 10238 bytes, use the Built-in Ethernet port QCPU whose serial number (first five digits) is "12052" or later.	QnU*2 LCPU*2

Error code (Hexadecimal)	Error item	Error details	Corrective action	Corresponding CPU
$41AB_H$	Ethernet I/F Error	Transmission failed due to timeout of retransmission.	• Review the IP address and Ethernet address of the target device. • Check whether the target device has the ARP function. If not, communicate with the one that has the ARP function. • Check the external device operation. • The line may be congested with packets. Resend data after a while. • Check the status of devices (such as cables, hubs, and routers) on the line to the external devices. • Check that the target device completes initial processing and open processing. • Check that a binary code is set for the communication data code of the target device. • Review the latency time setting if the simple PLC communication function is used.	QnU*2 LCPU*2
$41AC_H$	Ethernet I/F Error	• The target device cannot be found. • The TCP connection is disconnected by the target device. • The Fullpassive device rejects the communication and the TCP connection is disconnected.	• Check the external device operation. • Check whether the cables are securely connected. • Check whether the target IP address setting of the Fullpassive device and the IP address of the Active device are matched.	QnU*2 LCPU*2
$41AD_H$	Ethernet I/F Error	Data cannot be send due to no connection or disconnection of the cable.	• Check whether the cables are securely connected. • Check the line status by PING test from the target device. • Reset the CPU module.	QnU*2 LCPU*2
$41AE_H$	Ethernet I/F Error	Connection of the control port to the FTP server failed.	• Correct "IP address" in the Built-in Ethernet port tab. • Correct "FTP server name" in the "FTP setting" window. • Check connection with the FTP server. • Disconnect the user session on the FTP server.	QnU*2 LCPU*2
$41AF_H$	Ethernet I/F Error	Disconnection of the control port to the FTP server failed.	• Correct the settings in the "FTP setting" window. • Check connection with the FTP server.	QnU*2 LCPU*2
$41B0_H$	Ethernet I/F Error	Login to the FTP server failed.	• Correct "Login user name" and "Login password" in the "FTP setting" window. • Check the FTP server software settings (login user name and login password). • Check communication logs of the FTP server software.	QnU*2 LCPU*2
$41B1_H$	Ethernet I/F Error	Execution of the FTP command to the FTP server failed.	• Correct "Directory path" and "Data transfer mode" in the "FTP setting" window. • Check that the user has a right to access (read/write) the FTP server or the specified file. • Check that the directory path set in the "FTP setting" window exists. • Check that the file set in the "FTP setting" window exists. • Correct the FTP server software settings. • Check communication logs of the FTP server software. • Correct the FTP command.	QnU*2 LCPU*2
$41B2_H$	Ethernet I/F Error	Connection of the data transfer port to the FTP server failed.	• Check connection with the FTP server. • Correct "Data transfer mode" in the "FTP setting" window. • When a firewall is active or the proxy server is on the connection path, consult the network administrator about the settings.	QnU*2 LCPU*2

Error code (Hexadecimal)	Error item	Error details	Corrective action	Corresponding CPU
$41B3_H$	Ethernet I/F Error	Disconnection of the data transfer port to the FTP server failed.	• Check connection with the FTP server. • Correct "Data transfer mode" in the "FTP setting" window. • When a firewall is active or the proxy server is on the connection path, consult the network administrator about the settings.	QnU*2 LCPU*2
$41B4_H$	Ethernet I/F Error	The connection number setting is invalid.	• Specify the connection No. within 1 to 16. • When using socket communication, check whether "Socket communication" is selected for "Open system" parameter. • When using predefined protocol function, check whether "Predefined protocol" is selected for "Open system" parameter.	QnU*2 LCPU*2
$41B6_H$	Ethernet I/F Error	The specified connection has already completed OPEN processing.	Perform CLOSE processing and then OPEN processing.	QnU*2 LCPU*2
$41B7_H$	Ethernet I/F Error	The specified connection has not completed OPEN processing.	Re-execute after OPEN processing is completed.	QnU*2 LCPU*2
$41B8_H$	Ethernet I/F Error	When "MELSEC-A (Ethernet Module)/MELSEC-FX3 (Ethernet Block/Adapter)" was specified in "Destination" of the simple PLC communication function, the function was executed while CPU exchange timing setting (SW7) of the Ethernet module is off and the CPU module on the destination is in the RUN status.	• Turn on CPU exchange timing setting (SW7) of the destination. • Set the CPU module on the destination to STOP and execute the function again.	QnUDV QnUDPV LCPU*2
$41B9_H$	Ethernet I/F Error	• Contents of control data is not correct. • Open instruction was executed through open settings parameter even though parameters are not set for "Open settings".	• Correct the contents of the control data. • Configure the open settings parameters or execute the OPEN instruction through control data.	QnU*2 LCPU*2
$41BA_H$	Ethernet I/F Error	An error occurred during file transfer to the FTP server.	• Delete unnecessary files on the FTP server to increase free space. • Check the connection status of the FTP server. • Correct the FTP command.	QnU*2 LCPU*2
$41BB_H$	Ethernet I/F Error	Multiple file transfer function (FTP client) instructions are executed simultaneously.	After the processing of the file transfer function (FTP client) instruction being executed ends, execute another file transfer function (FTP client) instruction.	QnU*2
$41BC_H$	Ethernet I/F Error	When "MELSEC-A (Ethernet Module)/MELSEC-FX3 (Ethernet Block/Adapter)" was specified in "Destination" of the simple PLC communication function, communications between the CPU module and the Ethernet module failed. (After the Ethernet module normally receives a request from another node, communications between the CPU module and the Ethernet module ailed due to a noise or other causes.)	• Ensure that the operating environment for the system meets the general specifications of the CPU module. • Reset the CPU module. • Execute again. If the same error code is displayed, the cause is a hardware failure of the CPU module. Please consult your local Mitsubishi representative.	QnUDV QnUDPV LCPU*2
$41BD_H$	Ethernet I/F Error	When "MELSEC-A (Ethernet Module)/MELSEC-FX3 (Ethernet Block/Adapter)" is specified in "Destination" of the simple PLC communication function, an incorrect device is specified.	• Check the specified device name. • Check the specified device No. • Check the device assignment parameters of the CPU module (destination).	QnUDV QnUDPV LCPU*2

Error code (Hexadecimal)	Error item	Error details	Corrective action	Corresponding CPU
$41BE_H$	Ethernet I/F Error	When "MELSEC-A (Ethernet Module)/MELSEC-FX3 (Ethernet Block/Adapter)" was specified in "Destination" of the simple PLC communication function, a system error occurred. (The possible cause is malfunction due to noise or other causes or hardware failure).	• Check that the power supply module and the CPU module are mounted/connected properly. • Ensure that the operating environment for the system meets the general specifications of the CPU module. • Check whether the power capacity is sufficient. • Reset the CPU module. • Execute again. If the same error code is displayed, the cause is a hardware failure of the CPU module. Please consult your local Mitsubishi representative.	QnUDV QnUDPV LCPU*2
$41BF_H$	Ethernet I/F Error	When "MELSEC-A (Ethernet Module)/MELSEC-FX3 (Ethernet Block/Adapter)" was specified in "Destination" of the simple PLC communication function, a system error occurred. (The possible cause is malfunction due to noise or other causes or hardware failure).	• Check that the power supply module and the CPU module are mounted/connected properly. • Ensure that the operating environment for the system meets the general specifications of the CPU module. • Check whether the power capacity is sufficient. • Reset the CPU module. • Execute again. If the same error code is displayed, the cause is a hardware failure of the CPU module. Please consult your local Mitsubishi representative.	QnUDV QnUDPV LCPU*2
$41C1_H$	File-related error	The format information data of the specified drive (memory) is abnormal.	The file information data may be corrupted. After backing up the data in the CPU module, format the CPU memory.	QCPU LCPU
$41C2_H$	File-related error	File open specification data for file access is wrong.	Execute again after checking the specification data.	QCPU LCPU
$41C3_H$	File-related error	Simultaneously accessible files exceeded the maximum.	Execute again after decreasing file operations.	QCPU LCPU
$41C4_H$	File-related error	Simultaneously accessible files exceeded the maximum.	Execute again after decreasing file operations.	QCPU LCPU
$41C5_H$	File-related error	• The specified file does not exist. • The file does not exist in the valid drive.	• Execute again after checking the file. • Execute again after checking that the file exists in the valid drive.	QCPU LCPU
$41C7_H$	File-related error	The specified file or drive (memory) does not exist.	Execute again after checking the file or drive (memory).	QCPU LCPU
$41C8_H$	File-related error	The size of the specified file has exceeded that of the existing file.	Execute again after checking the size of the specified file. If the error recurs after re-execution, the file information data may be corrupted. After backing up the data in the CPU module, format the CPU memory.	QCPU LCPU
$41C9_H$	File-related error	Access to the file sector was unsuccessful. The format information data of the target drive (memory) is abnormal.	After backing up the data in the CPU module, format the CPU memory.	QCPU LCPU
$41CA_H$	File-related error	Access to the file sector was unsuccessful. The format information data of the target drive (memory) is abnormal.	After backing up the data in the CPU module, format the CPU memory.	QCPU LCPU
$41CB_H$	File-related error	The file name is specified in a wrong method.	Execute again after checking the file name.	QCPU LCPU
$41CC_H$	File-related error	The specified file or subdirectory does not exist.	Execute again after checking the name of the file and subdirectory.	QCPU LCPU
$41CD_H$	File-related error	An access inhibited with the attribute was made to the file. Or the file attribute was attempted to be changed to the inhibited one.	Check the attribute and open mode of the file.	QCPU LCPU
$41CE_H$	File-related error	The file cannot be written because the specified file is read-only.	The specified file is write-protected. Execute again after checking the attribute.	QCPU LCPU
$41CF_H$	File-related error	The specified drive (memory) has been used exceeding the capacity.	Execute again after checking the drive (memory) capacity.	QCPU LCPU

Error code (Hexadecimal)	Error item	Error details	Corrective action	Corresponding CPU
$41D0_H$	File-related error	The specified drive (memory) has no free space. Or the number of files in the directory of the specified drive (memory) has exceeded the maximum.	• Execute again after increasing the free space of the drive (memory). • Execute again after deleting file(s) in the drive (memory).	QCPU LCPU
$41D1_H$	File-related error	• The file name is specified in a wrong method. • The SD memory card is being disabled by SM606 (SD memory card forced disable instruction).	• Execute again after checking the file name. If the error recurs after re-execution, the file information data may be corrupted. After backing up the data in the CPU module, format the CPU memory. • Cancel the SD memory card forced disable instruction.	QCPU LCPU
$41D3_H$	File-related error	Access into the SD memory card has failed.	• Check if the SD memory card is inserted, and execute the processing again. • Replace the SD memory card, and execute the processing again. • Execute the data backup, and format the PLC memory.	QnUDV QnUDPV
$41D4_H$	File-related error	The size of the specified file has exceeded that of the existing file.	Execute again after checking the size of the specified file. If the error recurs after re-execution, the file information data may be corrupted. After backing up the data in the CPU module, format the CPU memory.	QCPU LCPU
$41D5_H$	File-related error	The file of the same name exists.	Forcibly execute the request, or execute after changing the file name.	QCPU LCPU
$41D6_H$	File-related error	The format information data of the specified drive (memory) is abnormal.	The file information data may be corrupted. After backing up the data in the CPU module, format the CPU memory.	QCPU LCPU
$41D7_H$	File-related error	The format information data of the specified drive (memory) is abnormal.	The file information data may be corrupted. After backing up the data in the CPU module, format the CPU memory.	QCPU LCPU
$41D8_H$	File-related error	The specified file is being accessed.	Execute again after a while.	QCPU LCPU
$41DF_H$	File-related error	The specified drive (memory) is write-protected.	Execute again after canceling the write protect of the specified drive (memory).	QCPU LCPU
$41E0_H$	File-related error	The specified drive (memory) is abnormal or does not exist.	• Execute the operation again after checking that the memory card or SD memory card has been inserted. • After backing up the data, execute programmable controller memory format.	QCPU LCPU
$41E1_H$	File-related error	Access to the flash ROM was unsuccessful.	• After backing up the data, execute write to PLC (Flash ROM). • Execute the operation again after checking that the specified drive is a flash ROM and that the size of the memory card or SD memory card is correct.	QCPU LCPU
$41E4_H$	File-related error	Access to the memory card or SD memory card was unsuccessful.	• Execute the operation again after checking that the memory card or SD memory card has been inserted. • Execute the operation again after replacing the memory card or SD memory card. • After backing up the data, execute programmable controller memory format.	QCPU LCPU
$41E7_H$	File-related error	The format information data of the specified drive (memory) is abnormal.	The file information data may be corrupted. After backing up the data in the CPU module, format the CPU memory.	QCPU LCPU
$41E8_H$	File-related error	The format information data of the specified drive (memory) is abnormal.	The file information data may be corrupted. After backing up the data in the CPU module, format the CPU memory.	QCPU LCPU
$41E9_H$	File-related error	The specified file is being accessed.	Execute again after a while.	QCPU LCPU
$41EB_H$	File-related error	The file name is specified in a wrong method.	Execute again after checking the file name.	QCPU LCPU

Error code (Hexadecimal)	Error item	Error details	Corrective action	Corresponding CPU
$41EC_H$	File-related error	The file system of the specified drive (memory) is logically corrupted.	The file information data may have been corrupted. After backing up the data in the CPU module, format the CPU memory.	QCPU LCPU
$41ED_H$	File-related error	The specified drive (memory) does not have continuous free space. (The free space for file is sufficient but the continuous free space is insufficient.)	Execute again after deleting unnecessary files or executing programmable controller memory arrangement.	QCPU LCPU
$41EF_H$	File-related error	Creation of power failure backup for the specified drive (memory) was unsuccessful.	Execute the operation again after checking that the memory card or SD memory card has been inserted.	QCPU LCPU
$41F0_H$	File-related error	The power failure backup data of the specified drive (memory) are corrupted.	Execute the operation again after checking that the memory card or SD memory card has been inserted.	QCPU LCPU
$41F1_H$	File-related error	The power failure backup for the specified drive (memory) has a repair command.	Execute the operation again after checking that the memory card or SD memory card has been inserted.	QCPU LCPU
$41F2_H$	File-related error	Operation cannot be performed since the specified drive (memory) is Flash ROM.	Execute again after checking the specified drive (memory). When performing operation for the Flash ROM, use write to PLC (Flash ROM).	QCPU LCPU
$41F3_H$	File-related error	The file size is larger than the following: The value to be acquired when 2byte is subtracted from 4Gbyte	Specify a smaller value for the file size when creating a file or changing the file size. Alternatively, divide the file so that each file size is smaller.	QnUDV QnUDPV LCPU
$41F4_H$	File-related error	Since the operation prohibited by the system is performed, the requested processing cannot be performed.	Since the operation is prohibited by the system, the file operation is not performed.	QCPU LCPU
$41F6_H$	File-related error	The following files cannot be written because the write-protect function for device data (from outside the CPU module) is enabled. • Initial label value file • File register file	• Do not write the specified file. • Disable the write-protect function for device data (from outside the CPU module) and execute the request again.	QnUDV QnUDPV
$41F8_H$	File-related error	The data is being accessed from another programming tool.	PLC write to the program memory or transfer to the backup memory is in execution. Access the data again after checking that the above-mentioned function has been completed.	QCPU LCPU
$41F9_H$	File-related error	The data is being accessed from another programming tool.	Another device data saving was executed during execution. Access the data again after the current one is completed.	QCPU LCPU
$41FA_H$	File-related error	Program was written beyond the area where the program can be executed.	Execute again after reducing either the already written program or newly written program.	QCPU LCPU
$41FB_H$	File-related error	The specified file is already being manipulated from the programming tool.	Execute again after the currently performed operation is completed.	QCPU LCPU
$41FC_H$	File-related error	An attempt was made to erase the drive (memory) being used.	The specified drive (memory) is being used and cannot be erased.	QCPU LCPU
$41FD_H$	File-related error	There are no data written to the Flash ROM.	Write a file by executing write to PLC (Flash ROM).	QCPU LCPU
$41FE_H$	File-related error	• The memory card or SD memory card has not been inserted. • QnUDVCPU and QnUDPVCPU: The SD memory card is being disabled. • LCPU: The SD memory card access control switch is not slid down. • The SD memory card is being disabled by SM606 (SD memory card forced disable instruction).	• Insert or re-insert the memory card or SD memory card. • QnUDVCPU and QnUDPVCPU: Remove the SD memory card and insert it again. • LCPU: Slide the SD memory card access control switch down. • Cancel the SD memory card forced disable instruction.	QCPU LCPU
$41FF_H$	File-related error	The type of the memory card or SD memory card differs.	Check the type of the memory card or SD memory card.	QCPU LCPU

Error code (Hexadecimal)	Error item	Error details	Corrective action	Corresponding CPU
4200_H	Online module change-related error	The requested processing cannot be performed because online module change is disabled by parameter setting.	Do not send the request where this error occurred. Alternatively, enable online module change by parameter setting and send the request again.	QCPU
4201_H	Online module change-related error	The requested processing cannot be performed because online module change is enabled by parameter setting.	Do not send the request where this error occurred. Alternatively, disable online module change by parameter setting and send the request again.	QCPU
4202_H	Online module change-related error	The requested processing cannot be performed since an online module change is being performed.	Make a request again after completion of the online module change.	QCPU
4203_H	Online module change-related error	The module mounted on the main base unit cannot be replaced online since the extension base unit is mounted.	Take following procedures to replace the module mounted on the main base unit. • Switch the system where the target module to be replaced is mounted to the standby system. • Turn OFF power supply of the standby system. • Replace the target module.	QnPH
4204_H	Online module change-related error	The specified module of the extension base unit cannot be replaced online since it is connected to the standby system.	Change the connection destination to the control system and perform the online module change again.	QnPH
4210_H	Online module change-related error	The specified start I/O number is outside the range.	When making a request, specify the start I/O number of the module that will be changed online.	QnPH
4211_H	Online module change-related error	An online module change request is abnormal.	Check the command used to make a request.	QnPH
4212_H	Online module change-related error	An online module change is already being made for other equipment.	Make a request again after completion of the online module change, or continue after changing the connection path.	QnPH
4213_H	Online module change-related error	The specified start I/O number differs from the one registered for online module change.	When making a request, specify the start I/O number of the module being changed online.	QnPH
4214_H	Online module change-related error	The specified module differs from the one changed online.	Make a request again after mounting the module that is the same as the one changed online.	QnPH
4215_H	Online module change-related error	The specified module does not exist.	When making a request, specify the start I/O number of the module that will be changed online, or make a request again after mounting the module.	QnPH
4216_H	Online module change-related error	The specified module is faulty.	Make a request again after changing the module.	QnPH
4217_H	Online module change-related error	There is no response from the specified module.	Continue the online module changing operation.	QnPH
4218_H	Online module change-related error	The specified module is incompatible with online module change.	Do not make a request where an error occurred, or make a request again to the module compatible with online module change.	QnPH
4219_H	Online module change-related error	The specified module is mounted on the extension base unit of the type that requires no power supply module.	Do not make a request to any modules mounted on the extension base unit of the type that requires no power supply module and the main base unit.	QnPH
$421A_H$	Online module change-related error	The specified module is not in a control group.	Make a request to the CPU module that controls the specified module.	QnPH
$421B_H$	Online module change-related error	An error occurred in the setting of the initial setting parameter of the intelligent function module.	Resume processing after checking the contents of the intelligent function module buffer memory.	QnPH
$421C_H$	Online module change-related error	Cannot be executed as the parameter file has been rewritten.	Operation cannot be performed. Operation is interrupted.	QnPH

Error code (Hexadecimal)	Error item	Error details	Corrective action	Corresponding CPU
$421D_H$	Online module change-related error	System switching occurs during the online module change.	Connect the programming tool to the new control system to check the status of the online module change. According to the status of online module change, take procedures for it.	QnPH
$421E_H$	Online module change-related error	The information of the online module change cannot be sent to the standby system. When the system switching occurs during the online module change, the online module change may not be continued.	The tracking cable may be faulty or the standby system may have an error. • Check the mounting status of the tracking cable or replace the tracking cable. • Check the status of the standby system. When a stop error was detected by the standby system, perform troubleshooting.	QnPH
$421F_H$	Online module change-related error	The module mounted on the extension base unit cannot be replaced online when the connection destination is set to the standby system in the separate mode.	• Set the connection destination of a programming tool to the present control system. • Perform the online module change to the module mounted on the extension base unit again.	QnPH
4220_H	E-mail related error	The number of characters exceeded the valid range when registering the e-mail addresses by using the SP.MLOPEADR instruction.	Reduce the number of e-mail addresses to be registered.	LCPU
4221_H	E-mail related error	An unsupported character is used in the e-mail address to be registered by using the SP.MLOPEADR instruction.	Do not use any unsupported character in the e-mail address.	LCPU
4222_H	E-mail related error	The e-mail address to be deleted by using the SP.MLOPEADR instruction has not been registered.	Check that the deletion target e-mail address is correct.	LCPU
4223_H	E-mail related error	The number of characters in the e-mail address read by using the SP.MLGETADR instruction exceeded the specified data length.	Check and correct the data length setting.	LCPU
4224_H	E-mail related error	The e-mail address backup by using the SP.MLOPEADR instruction has failed.	• Execute the instruction again. • If the same error code is displayed even after executing the instruction again, the cause is a hardware failure of the CPU module. Please consult your local Mitsubishi representative.	LCPU
4225_H	E-mail related error	The e-mail address backup file was not restored when the CPU module was powered on.	• Power off and on the CPU module. Or reset the CPU module. • If the same error code is displayed again after powering off and on or reset the CPU module, the cause is a hardware failure of the CPU module. Please consult your local Mitsubishi representative.	LCPU
4226_H	E-mail related error	System error (Reference error)	• Check that the power supply module and the CPU module are mounted/connected properly. • Check that the system is operating within the general specifications of the CPU module. • Check whether the power capacity is sufficient. • Reset the CPU module. • Execute again. If the same error code is displayed, the cause is a hardware failure of the CPU module. Please consult your local Mitsubishi representative.	LCPU
4227_H	E-mail related error	System error (Failed to read the port number)	• Check that the power supply module and the CPU module are mounted/connected properly. • Check that the system is operating within the general specifications of the CPU module. • Check whether the power capacity is sufficient. • Reset the CPU module. • Execute again. If the same error code is displayed, the cause is a hardware failure of the CPU module. Please consult your local Mitsubishi representative.	LCPU

Error code (Hexadecimal)	Error item	Error details	Corrective action	Corresponding CPU
4228_H	E-mail related error	System error (Failed to create the command)	• Check that the power supply module and the CPU module are mounted/connected properly. • Check that the system is operating within the general specifications of the CPU module. • Check whether the power capacity is sufficient. • Reset the CPU module. • Execute again. If the same error code is displayed, the cause is a hardware failure of the CPU module. Please consult your local Mitsubishi representative.	LCPU
4229_H	E-mail related error	System error (State transition error)	• Check that the power supply module and the CPU module are mounted/connected properly. • Check that the system is operating within the general specifications of the CPU module. • Check whether the power capacity is sufficient. • Reset the CPU module. • Execute again. If the same error code is displayed, the cause is a hardware failure of the CPU module. Please consult your local Mitsubishi representative.	LCPU
4230_H	File transfer function (FTP client) error	A file cannot be transferred because a file with the same name exists on the FTP server.	Check that there is no file with the same name on the FTP server.	LCPU
4232_H	File transfer function (FTP client) error	• The number of files to be transferred exceeded the valid range when the wild card was used in the file transfer function (FTP client) instruction. • There is no corresponding file when the wild card is used in the file transfer function (FTP client) instruction.	Check and correct the wild card specification.	LCPU
4233_H	File transfer function (FTP client) error	DNS client response timeout error	• Check the DNS server address setting. • Check that the communications with the DNS server is enabled by using the PING command. • Check that the own station IP address and the DNS server IP address are in the same class. (If not, check the router setting.)	LCPU
4234_H	File transfer function (FTP client) error	FTP response timeout error	• Check that the FTP server name is registered in the DNS. • Change the FTP server name to the IP address, and check the operation. • Check that the communications with the FTP server is enabled by using the PING command.	LCPU
4240_H	Redundant system-related error	Any of the following unsupported operations was executed for the standby system. • Operation mode change • System switching • Memory copy from control system to standby system	Execute the operation again after changing the transfer setup to the control system.	QnPRH
4241_H	Redundant system-related error	Communication cannot be made since the standby system has been powered off or reset or is in a user watchdog timer error or CPU module hardware fault status.	Request communication after powering on the standby system or setting its Reset switch to the neutral position.	QnPRH
4242_H	Redundant system-related error	Communication with the standby system cannot be made since the tracking cable is faulty or disconnected.	Cannot be executed since the tracking cable is disconnected or faulty. Execute again after checking the tracking cable for disconnection or changing it for a normal one.	QnPRH
4243_H	Redundant system-related error	The command cannot be executed since the standby system is in stop error.	Execute again after removing the stop error of the standby system.	QnPRH
4244_H	Redundant system-related error	The command cannot be executed since the operation status differs from that of the standby system.	Execute again after placing the standby system in the same operation status (RUN/STOP) as the control system.	QnPRH
4245_H	Redundant system-related error	Other system CPU module status error	Check that the other system CPU module has normally started up and that the tracking cable is connected.	QnPRH

Error code (Hexadecimal)	Error item	Error details	Corrective action	Corresponding CPU
4246_H	Redundant system-related error	The command cannot be executed since operation mode (separate/backup) change or system (control/standby system) switching is being executed.	Execute again after the operation mode change or system switching being executed is completed.	QnPRH
4247_H	Redundant system-related error	Memory copy from control system to standby system is already being executed.	Execute again after memory copy from control system to standby system is completed. Check the following and take corrective action. • Is SM1596 of the control system or standby system ON? (ON: Memory copy being executed) Execute again after SM1596 has turned OFF since it is turned OFF by the system on completion of memory copy. • Is SM1597 of the control system ON? (ON: Memory copy completed) Execute again after turning OFF SM1597 of the control system.	QnPRH
4248_H	Redundant system-related error	Communication was made during system switching. The system specified in the transfer setup (request destination module I/O number) does not exist.	• Execute again after system switching. • After checking whether the specified system exists or not, restart communication.	QnPRH
4249_H	Redundant system-related error	The redundant system is not established. (Control system/standby system or System A/System B not yet definite)	• Normally start the system as the redundant system. (Make communication again after establishing the system.) • Execute again after changing the transfer setup (request destination module I/O number) to "No settings have been made" ($03FF_H$).	QnPRH
$424A_H$	Redundant system-related error	A command that cannot be processed was executed when the control system or standby system is specified in the transfer setup (request destination module I/O number).	Execute the operation again after changing the transfer setup (request destination module I/O number) to No settings have been made ($03FF_H$)/system A/system B.	QnPRH
$424B_H$	Redundant system-related error	The command cannot be executed since system switching is inhibited by the manual system switching enable flag (SM1592).	Manual system switching is inhibited by the manual system switching enable flag (SM1592). Execute again after turning ON SM1592.	QnPRH
$424C_H$	Redundant system-related error	The specified command cannot be executed during online program change operation.	Execute again after the online program change operation is finished.	QnPRH
$424D_H$	Redundant system-related error	The transfer setup or function unavailable for the debug mode was used.	• Execute again after changing to the backup mode. • Execute again after changing the transfer setup (request destination module I/O number) to System A or control system.	QnPRH
$424E_H$	Redundant system-related error	The control system/standby system specifying method is not supported.	This function cannot be executed since it is not supported.	QnPRH
$424F_H$	Redundant system-related error	System switching was executed by the other condition during execution of system switching by the programming tool.	Although system switching was executed from the programming tool, system switching was executed first by the other condition. Check the system for any problem and execute the operation again as necessary.	QnPRH
4250_H	Redundant system-related error	Sum check error occurred in tracking communication.	Execute communication again after changing the tracking cable. If the same error occurs even after the tracking cable is changed, the cause is a hardware failure of the CPU module. Please consult your local Mitsubishi representative.	QnPRH
4251_H	Redundant system-related error	The command cannot be executed in the separate mode.	Execute again after changing to the backup mode.	QnPRH
4252_H	Redundant system-related error	System switching was not executed since an error occurred in the redundant system compatible network module of the standby system.	By monitoring SD1690 (other system network module No. that issued system switching request), identify the faulty redundant-compatible intelligent module of the standby system, then remove the module fault, and execute again.	QnPRH

Error code (Hexadecimal)	Error item	Error details	Corrective action	Corresponding CPU
4253_H	Redundant system-related error	Since a communication error or system switching occurred during online program change to the control system CPU module, online program change to the standby CPU module cannot be executed.	Since a communication error or system switching occurred during execution of online program change to the control system CPU module, online program change redundant tracking was suspended. Execute online program change again after confirming that communication with the control system CPU module and standby system CPU module can be normally made. If it takes time for the communication between the programming tool and either the control system CPU module or standby system CPU module, change the value in SD1710 (standby system online start waiting time) so that errors may be avoided.	QnPRH
4254_H	Redundant system-related error	The command cannot be executed since an error was detected in the tracking communication hardware.	The tracking cable may not be connected correctly, or the tracking communication hardware of the CPU module may be faulty. Check the connection status of the tracking cable. If the condition is not restored to normal after the cable connection status is corrected, the possible cause is the hardware fault of the CPU module.	QnPRH
4255_H	Redundant system-related error	The command cannot be executed since tracking communication is being prepared.	Tracking communication is being prepared when it is connected. Execute the operation again after a while (about 1 second).	QnPRH
4256_H	Redundant system-related error	The command cannot be executed since a timeout error occurred in tracking communication.	The tracking cable may not be connected correctly, or the tracking communication hardware of the CPU module may be faulty. Check the connection status of the tracking cable. If the condition is not restored to normal after the cable connection status is corrected, the possible cause is the hardware fault of the CPU module.	QnPRH
4257_H	Redundant system-related error	The command cannot be executed since the host system CPU module is in a watchdog timer error or CPU module hardware fault status.	The command cannot be executed since the host system is in a watchdog timer error or CPU module hardware fault status. Execute again after checking the host system status.	QnPRH
4258_H	Redundant system-related error	Operation mode being changed (from backup mode to separate mode)	Change the operating status of the CPU module from STOP to RUN with the RUN/STOP switch of the module whose RUN LED is flashing or by remote operation, and end the operation mode change. Then, execute the command again.	QnPRH
4259_H	Redundant system-related error	Operation mode is being changed with another programming tool in the communication route different from the one currently used.	Execute again in the same communication route as the one where the operation mode change was executed.	QnPRH
$425B_H$	Redundant system-related error	Although the communication was made via the intelligent function module mounted on the extension base unit, the combination of the connection destination specification (Redundant CPU specification) and the command is unsupported.	Change the combination of the connection destination specification and the command to the supported combination.	QnPRH
$425C_H$	Redundant system-related error	System switching cannot be made since the module mounted on the extension base unit is being replaced online.	Switch systems after the online module change has been completed.	QnPRH
$425D_H$	Redundant system-related error	Operation mode cannot be changed since the module mounted on the extension base unit is being replaced online.	Change the operation mode after the online module change has been completed.	QnPRH
4270_H	Data logging[*1]	Data logging is being performed (logging, saving the logging data, completing, on hold, or in error) with a different memory.	Register the data logging to the memory where a data logging is being performed. Alternatively, stop the data logging being performed and register again.	QnUDV QnUDPV LCPU
4271_H	Data logging[*1]	The specified data logging is already being performed (logging, saving the logging data, completing, on hold, or in error).	Stop the data logging. Alternatively, write, delete, or register to the setting number where no data logging is being performed.	QnUDV QnUDPV LCPU

Error code (Hexadecimal)	Error item	Error details	Corrective action	Corresponding CPU
4272_H	Data logging*1	The trigger logging with "Device" specified as a trigger condition is being performed (logging, saving the logging data, completing, on hold, or in error).	Change the trigger condition. Alternatively, stop the trigger logging being performed (logging, saving the logging data, completing, on hold, or in error) with "Device" specified as the trigger condition, and then register.	QnUDV QnUDPV LCPU
4273_H	Data logging*1	The data logging function cannot be executed because the sampling trace function is being performed.	Hold the sampling trace to register the data logging.	QnUDV QnUDPV LCPU
4274_H	Data logging*1	Trigger loggings have registered exceeding the number of trigger loggings collectable in the data logging buffer.	• Increase the capacity of the data logging buffer. • Reduce the number of records set for the trigger logging.	QnUDV QnUDPV LCPU
4275_H	Data logging*1	Auto logging is being performed.	After the auto logging, replace the SD memory card and execute again.	QnUDV QnUDPV LCPU
4276_H	Data logging*1	The specified command cannot be executed because the data logging function is being performed (i.e. logging, saving the logging data, completing, on hold, or in error).	Stop the data logging and then execute the command.	QnUDV QnUDPV LCPU
4277_H	Data logging*1	The number of stored files has exceeded the value set in advance.	The number of files stored in the storage destination memory has exceeded the setting value. Delete files or change the storage destination and then register.	QnUDV QnUDPV LCPU
4278_H	Data logging*1	The number of stored files has reached to the maximum.	The number of stored files has reached to the maximum of FFFFFFFF. Delete files or change the storage destination and then register.	QnUDV QnUDPV LCPU
$427A_H$	Data logging*1	Common setting file does not exist.	• Write the common settings to the target memory. • Register the data logging to the memory where the common settings are stored.	QnUDV QnUDPV LCPU
$427B_H$	Data logging*1	A data logging is being performed (logging in execution, logging data are being saved, completing, on hold, or in error) in the same file storage destination.	Stop the data logging destined for the same storage and then register. Alternatively, change the storage destination of the file and then register.	QnUDV QnUDPV LCPU
$427C_H$	Data logging*1	• Data logging file transfer function settings are mistaken. • A data logging setting file is corrupt.	• Check settings of the data logging file transfer function. • Write the settings using the CPU Module Logging Configuration Tool.	QnUDV QnUDPV LCPU
$427D_H$	File-related error	• A data logging file to be transferred was deleted during transfer by file switching. • Reading of a data logging file failed. • A data logging file was accessed while the SD memory card has been forcibly set to be disabled.	• Correct "File switching timing" and "Number of saved files" in the "Save" screen. • Check that data logging files are not deleted using the CPU Module Logging Configuration Tool. • Check that an SD memory card is inserted. • When the SD memory card access control switch is on the upper position, slide it down, and check that the SD LED turns on. • If the SD memory card has been forcibly disabled, cancel the setting.	QnUDV QnUDPV LCPU
$427E_H$	File-related error	• Since a file was switched before file transfer, a new data logging file is saved. • Since a file was switched during a retry, a new data logging file is saved.	• Correct "File switching timing" in the "Save" screen to reduce the frequency of file switching. • Correct the number of sampled data and "Sampling interval" in the "Sampling" screen to reduce the number of sampled data. • Correct the settings in the "CSV output" screen to reduce the file size. • Check connection with the FTP server.	QnUDV QnUDPV LCPU
$427F_H$	File-related error	File transfer failed due to the stop operation of file transfer.	Check that data logging is not started from the CPU Module Logging Configuration Tool before file transfer is completed.	QnUDV QnUDPV LCPU
4280_H	File-related error	A file transfer test was executed from another CPU Module Logging Configuration Tool during execution of a file transfer test.	Execute the file transfer test again after the ongoing test is completed.	QnUDV QnUDPV LCPU

Error code (Hexadecimal)	Error item	Error details	Corrective action	Corresponding CPU
4281_H	File-related error	The data logging setting for different programmable controller series was registered.	Set the data logging for the programmable controller series used.	QnUDV QnUDPV
4290_H	Realtime monitor	The total buffer capacity for realtime monitor and data logging exceeds the maximum limit.	• Correct the buffer capacity so that the total capacity for data logging and realtime monitor does not exceed the maximum limit. To change the buffer capacity for data logging, write the changed data (common setting) to the CPU module and start data logging again, or power off and on or reset the CPU module to restore the data logging function to the initial state. • Stop the realtime monitor function, and restart data logging.	LCPU
4291_H	Realtime monitor	Online change was executed during execution of realtime monitor where a step number is specified as a timing condition or trigger condition.	After the online change processing has completed, check the step number, and execute the realtime monitor again.	LCPU
4292_H	Realtime monitor	During the execution of realtime monitor, an attempt was made to start another realtime monitor.	Stop the realtime monitor being executed, and start another realtime monitor.	LCPU
$430D_H$	Other error	An abnormal request data was received.	Power off and on or reset the CPU module and then execute again. Execute again. If the same error code is displayed, please consult your local Mitsubishi representative.	QnUDV QnUDPV
4330_H	Maintenance	The CPU module change function (backup/restoration) with memory card is being executed from the same source.	Check that the CPU module change function (backup/restoration) with memory card is not being executed, and communicate again.	QCPU LCPU
4331_H	Maintenance	User authentication is required.	Disable the user authentication function, and communicate again.	QCPU
4332_H	Maintenance	The specified command cannot be executed because the CPU module change function (backup/restoration) with SD memory card is being executed.	After the CPU module change processing (backup/restoration) is completed, execute the command again.	QCPU LCPU
4333_H	Maintenance	Not ready for backup.	Complete the preparation for backup and then execute again.	QCPU LCPU
4334_H	Maintenance	Backup file does not exist.	Insert a memory card or SD memory card with a backup file and then execute again.	QCPU
4335_H	Maintenance	The specified function cannot be executed because latch data are being backed up.	Complete the latch data backup function and then execute again.	QCPU LCPU
4336_H	Maintenance	The specified function cannot be executed because a FTP client is being FTP-connected to the CPU module via the built-in Ethernet port.	Disconnect all FTP connections to the CPU module and then execute again.	QCPU LCPU
4337_H	Maintenance	Module error collection file does not exist.	Power off and then on or reset the CPU module and then execute again.	QCPU LCPU
4338_H	Maintenance	Readout of module error collection data has been failed when opening the screen to display the data or when updating the data.	• Retry the operation. • Increase the number of module error collections to be stored.	QCPU LCPU
4339_H	Maintenance	Readout of module error collection data was failed because the function is disabled by parameter settings.	Enable the module error collection function by parameter settings and then execute again.	QCPU LCPU
$433A_H$	Maintenance	The specified command cannot be executed because the project data batch save/load function is being executed.	After the batch save/load processing is completed, execute the command again.	LCPU
$433B_H$	Maintenance	The CPU module change function (backup/restoration) with memory card was executed to the locked CPU module.	Execute the CPU module change function (backup/restoration) with memory card to the unlocked CPU module.	QnUDV QnUDPV
$433D_H$	Maintenance	The specified command cannot be executed because the file transfer function (FTP client) is being executed.	Wait until the file transfer processing (FTP client) completes, and execute the command again.	LCPU

Error code (Hexadecimal)	Error item	Error details	Corrective action	Corresponding CPU
4400_H	Security	A file protected by a password has been opened without unlocking the password.	Enter a correct password and perform password authentication.	QnUDV QnUDPV LCPU
4401_H	Security	• Read password authorization has failed when required. • The password format is incorrect.	• Set a correct read password and perform password authentication. • Access the file with the correct method.	QnUDV QnUDPV LCPU
4402_H	Security	• Write password authorization has failed when required. • The password format is incorrect.	• Set a correct write password and perform password authentication. • Access the file with the correct method.	QnUDV QnUDPV LCPU
4403_H	Security	Both passwords for reading and for writing that are set upon Create, Change, Delete, or Disable do not match the previous ones.	Configure a correct password for both reading and for writing, authorize them, and then access.	QnUDV QnUDPV LCPU
4404_H	Security	A file error was detected before or after performing Create, Change, or Delete.	• Format the drive including the target file by formatting the CPU module memory. • Write the target file to the CPU module again, and then register or cancel the file password again.	QnUDV QnUDPV LCPU
4410_H	Security	The file of the locked CPU module is accessed without the security key authentication.	(1) Register the security key which locks the CPU module to the programming tool. (2) When the project is opened, lock the project with the security key which locks the CPU module. (3) When the CPU module is locked, the access control target file cannot be accessed using the following functions or external devices. • FTP server function • MC protocol • GOT • EZSocket	QnUDV QnUDPV
4412_H	Security	The security key cannot be registered to the CPU module due to the failure of the internal memory where the security key is registered. Or the security key of the CPU module cannot be deleted.	The cause is a hardware failure of the CPU module. Replace the CPU module.	QnUDV QnUDPV
4413_H	Security	Since the CPU module is locked and 32 programming tools are reading and writing programs simultaneously, another programming tool cannot read or write programs.	Wait until the number of programming tools which are reading and writing programs decreases to 31 or less.	QnUDV QnUDPV
4414_H	Security	Since the CPU module is locked, the requested processing cannot be performed.	Do not request any processing since the requested processing cannot be performed in this state.	QnUDV QnUDPV
4415_H	Security	Since the CPU module is not locked, the requested processing cannot be performed.	Do not request any processing since the requested processing cannot be performed in this state.	QnUDV QnUDPV
4416_H	Security	Since the CPU module is in locking or unlocking operation, the requested processing cannot be performed.	Request the processing after the locking or unlocking operation ends.	QnUDV QnUDPV
4426_H	Security	The prohibited operation was executed when "Execution Program Protection Setting" was enabled with a block password.	Unlock the block password and correct the setting.	QnUDV QnUDPV LCPU
4800_H	iQ Sensor Solution related error	The specified command cannot be executed because the iQ Sensor Solution function (data backup/restoration) is being executed.	Execute the command again after the iQ Sensor Solution function (data backup/restoration) ends.	QnUDV QnUDPV LCPU

Error code (Hexadecimal)	Error item	Error details	Corrective action	Corresponding CPU
4801_H	iQ Sensor Solution related error	• When the iQ Sensor Solution function (data backup/restoration) is executed, the target module does not exist. • When the iQ Sensor Solution function (data backup/restoration) is executed, the specified backup folder does not exist. • The setting value in the special register (SD) related to the iQ Sensor Solution function (data backup/restoration) is out of range.	Correct the setting value in the special register (SD), and execute the function again.	QnUDV QnUDPV LCPU
4802_H	iQ Sensor Solution related error	The number of iQ Sensor Solution function (data backup/restoration) backup folders is the maximum.	• Delete the existing backup folders, and execute the function again. • Set "Automatic specification (folder deletion supported)" in the folder number setting so that the oldest folder is automatically deleted.	QnUDV QnUDPV LCPU
4803_H	iQ Sensor Solution related error	The system file does not exist in the specified backup data, or the system file is broken.	Specify other backup data.	QnUDV QnUDPV LCPU
4804_H	iQ Sensor Solution related error	The backup file does not exist in the specified backup data, or the system file is broken.	Specify other backup data.	QnUDV QnUDPV LCPU
4805_H	iQ Sensor Solution related error	When the backup function of the iQ Sensor Solution function (data backup/restoration) is executed, no backup target device exists.	Correct the setting value in the special register (SD), and execute the function again.	QnUDV QnUDPV LCPU
4806_H	iQ Sensor Solution related error	The SD memory card was removed while the function was being executed.	Do not remove the memory card while the function is being executed.	QnUDV QnUDPV LCPU
4807_H	iQ Sensor Solution related error	Data cannot be communicated with external devices when the iQ Sensor Solution function (data backup/restoration) is executed.	• Check the external device operation. • Check the status of devices (such as cables, hubs, and routers) on the line to the external devices. • The line may be congested. Resend data after a while.	QnUDV QnUDPV LCPU
4808_H	iQ Sensor Solution related error	• When the restoration of the iQ Sensor Solution function (data backup/restoration) is performed, the backup source device supporting iQ Sensor Solution and the restoration target device supporting iQ Sensor Solution do not match. • The CPU module is not compatible with the CC-Link-AnyWireASLINK bridge module.	• Check the manufacturers, models, and versions of the specified backup source device supporting iQ Sensor Solution and the restoration target device supporting iQ Sensor Solution. • Replace the CPU module with a CPU module that is compatible with the CC-Link-AnyWireASLINK bridge module.	QnUDV QnUDPV LCPU
4809_H	iQ Sensor Solution related error	The function was executed to the module which does not support the iQ Sensor Solution function (data backup/restoration).	• Replace the module to the one which supports the iQ Sensor Solution function (data backup/restoration). • Execute the function to the module which supports the iQ Sensor Solution function (data backup/restoration).	QnUDV QnUDPV LCPU
$480A_H$	iQ Sensor Solution related error	The function was executed to the CC-Link module whose operating status has been switched from the standby master station to the master station.	Turn off and on the power supply for the master station and the standby master station, and execute the function again.	QnUDV QnUDPV LCPU
$480B_H$	iQ Sensor Solution related error	The function was executed to the CC-Link module for which the "Read the model name of device station" checkbox is not checked in parameter.	Check the "Read the model name of device station" checkbox for the auto detect setting in parameter, and execute the function again.	QnUDV QnUDPV LCPU
$480C_H$	iQ Sensor Solution related error	The specified command cannot be executed because the iQ Sensor Solution function (automatic detection of connected device) is being executed.	Execute the command again after the iQ Sensor Solution function (automatic detection of connected device) ends.	QnUDV QnUDPV LCPU
$480D_H$	iQ Sensor Solution related error	The specified command cannot be executed because the iQ Sensor Solution function (communication setting reflection) is being executed.	Execute the command again after the iQ Sensor Solution function (communication setting reflection) ends.	QnUDV QnUDPV LCPU

Error code (Hexadecimal)	Error item	Error details	Corrective action	Corresponding CPU
$480E_H$	iQ Sensor Solution related error	• The specified command cannot be executed because the iQ Sensor Solution function (monitoring) is being executed. • The specified command cannot be executed because the iQ Sensor Solution function (sensor parameter read/write) is being executed.	• Execute the command again after a while. • Execute the command again after the iQ Sensor Solution function (sensor parameter read/write) ends.	QnUDV QnUDPV LCPU
4900_H	Other error	After the values in "Device" of "PLC Parameter" of the CPU module, where the simple PLC communication function had been set, were changed, the parameters were written to the CPU module from the "Write to PLC" window.	Power off and on the CPU module. Or reset the CPU module.	QnUDV QnUDPV LCPU
4901_H	Other error	The file register used for the simple PLC communication function became out of range.	Correct the device number of the file register. And power off and on the CPU module or reset the module.	QnUDV QnUDPV LCPU
4902_H	Other error	The communication was stopped because an error occurred at the other setting No., for which the same destination device of the corresponding setting No. had been set.	Remove the error cause.	QnUDV QnUDPV LCPU
4903_H	Other error	The communication was stopped because a stop error occurred in the CPU module where the simple PLC communication function had been set.	Power off and on the CPU module. Or reset the CPU module.	QnUDV QnUDPV LCPU
4904_H	Other error	The specified command cannot be executed because a file or folder is being deleted using a display unit.	After the delete processing is completed, execute the command again.	LCPU
$4A00_H$	Link-related error	• Access to the specified station cannot be made since the routing parameters are not set to the start source CPU module and/or relay CPU module. • For routing via a multiple CPU system, the control CPU of the network module for data routing has not started. • When System A/System B is not yet identified in a redundant system configuration, communication was made with the other station via the network module. • The Built-in Ethernet port QCPU or the Built-in Ethernet port LCPU that performs IP packet transfer is not the control CPU of the CC-Link IE module, which is on the path that an IP packet takes.	• Set to the related stations the routing parameters for access to the specified station. • Retry after a while, or start communication after confirming that the system for data routing has started. • In a redundant system configuration, connect the tracking cable, start System A/System B normally, and then restart communication. • Set the Built-in Ethernet port QCPU or the Built-in Ethernet port LCPU that performs IP packet transfer as the control CPU of the CC-Link IE module, which is on the path that an IP packet takes.	QCPU LCPU
		• The network of the No. set to the routing parameters does not exist. • The specified CPU module cannot be communicated through the network that is not supported by the CPU module.	• Check and correct the routing parameters set to the related stations. • Set communication through the network that is supported by the specified CPU module.	QnUDV QnUDPV
$4A01_H$	Link-related error	• The network of the No. set to the routing parameters does not exist. • The specified CPU module cannot be communicated through the network that is not supported by the CPU module.	• Check and correct the routing parameters set to the related stations. • Set communication through the network that is supported by the specified CPU module.	QCPU LCPU
$4A02_H$	Link-related error	Access to the specified station cannot be made.	• Check the network module and the data link module for error or check that the modules are not in offline. • Check to see if the network number/PC number setting has no mistake.	QCPU LCPU
$4A03_H$	Link-related error	A request for network test was issued.	Check the request data of the MC protocol, etc.	QCPU LCPU

Error code (Hexadecimal)	Error item	Error details	Corrective action	Corresponding CPU
$4A04_H$	Link-related error	A request is executed to the CPU module which does not support all stations specification.	• Replace the CPU module to the one which supports all stations specification. • Execute the request to the CPU module which supports all stations specification.	QnUDV QnUDPV
$4A20_H$	IP communication test related error	• The upper 2 bytes of the IP addresses do not match between a CPU module and the request destination device on the same path that an IP packet takes. • The upper 2 bytes of the IP addresses do not match between a CPU module and a CC-Link IE module on the same path that an IP packet takes. • The upper 2 bytes of the IP addresses do not match between CC-Link IE modules on the same path that an IP packet takes. • The upper 2 bytes of the IP addresses do not match between the request source device and the CPU module connected to the request destination device by Ethernet.	• Check and correct the IP address settings of the built-in Ethernet ports of the CPU module. • Check and correct the IP address of the request destination device. • Check and correct the IP address of the CC-Link IE module. • Check and correct the IP address of the request source device.	QCPU LCPU
$4A21_H$	IP communication test related error	• The 3rd byte (Network No.) or 4th byte (Station No.) of the IP address of the CPU module is the number that is not available for CC-Link IE. • The 3rd byte (Network No.) or 4th byte (Station No.) of the IP address of the request destination device is the number that is not available for CC-Link IE.	• Check and correct the IP address settings of the built-in Ethernet ports of the CPU module. • Check and correct the IP address of the request destination device.	QCPU LCPU
$4A22_H$	IP communication test related error	The IP address is not set for a CC-Link IE module on the path that an IP packet takes.	• Set the IP address to the control station or master station of the CC-Link IE module. • Check the communication status with the control station or master station if the CC-Link IE module is used as a normal station or local station. • Replace the control station or master station with the one supporting the IP packet transfer function. • Conduct the IP communication test again after the CC-Link IE module is started up. • Check and correct the IP address of the request destination device.	QCPU LCPU
$4A23_H$	IP communication test related error	• The CPU module on the path that an IP packet takes does not support the IP packet transfer function. • Routing Parameters are set so that an IP packet is routed to the CPU module that does not support the IP packet transfer function.	• Replace the CPU module with the one supporting the IP packet transfer function. • Correct Routing Parameters so that an IP packet is routed to the CPU module that supports the IP packet transfer function. • Check and correct the IP address of the request destination device.	QCPU LCPU
$4A24_H$	IP communication test related error	• A network module on the path that an IP packet takes does not support the IP packet transfer function. • Routing Parameters are set so that an IP packet is routed to the network module that does not support the IP packet transfer function. • The 3rd byte (Network No.) of the IP address of the device on the path that an IP packet takes overlapped with the network No. of the module that is mounted with the CPU module and does not support the IP packet transfer function. • The 3rd byte (Network No.) of the IP address of the request destination device overlapped with the network No. of the module that is mounted with the CPU module and does not support the IP packet transfer function.	• Replace the CC-Link IE module with the one supporting the IP packet transfer function. • Correct Routing Parameters so that an IP packet is routed to the CC-Link IE module that supports the IP packet transfer function. • Check and correct the settings so that the 3rd byte (Network No.) of the IP address of the device on the path that an IP packet takes does not overlap with the network No. of the module that is mounted with the CPU module and does not support the IP packet transfer function. • Check and correct the settings so that the 3rd byte (Network No.) of the IP address of the request destination device does not overlap with the network No. of the module that is mounted with the CPU module and does not support the IP packet transfer function. • Check and correct the IP address of the request destination device.	QCPU LCPU

Error code (Hexadecimal)	Error item	Error details	Corrective action	Corresponding CPU
$4A25_H$	IP communication test related error	• "IP packet transfer setting" in Built-in Ethernet Port Setting tab of "PLC parameter" is not set. • Routing Parameters are set so that an IP packet is routed to the CPU module where IP packet transfer setting is not set.	• Select "Use" for IP packet transfer function in "IP packet transfer setting" in Built-in Ethernet Port Setting tab of "PLC parameter". • Correct Routing Parameters so that an IP packet is routed to the CPU module where IP packet transfer setting is set. • Check and correct the IP address of the request destination device.	QCPU LCPU
$4A26_H$	IP communication test related error	The IP communication test was started from the CPU module other than the Built-in Ethernet port QCPU.	Correct the setting so that the IP communication test starts from the Built-in Ethernet port QCPU.	QCPU
$4A27_H$	IP communication test related error	The Built-in Ethernet port QCPU that performs IP packet transfer is not the control CPU of the CC-Link IE module, which is on the path that an IP packet takes.	Set the Built-in Ethernet port QCPU that performs IP packet transfer as the control CPU of the CC-Link IE module, which is on the path that an IP packet takes.	QCPU
$4A28_H$	IP communication test related error	• In the system where the CPU module is connected to the request destination device over Ethernet, the request path and the response path of IP packets differ. • When multiple CC-Link IE modules with the same network number are connected in a multiple CPU system, the module mounted on the lowest slot number is not set as a controlled module that transfers IP packets. • When multiple CC-Link IE modules with the same network number are connected in a single or multiple CPU system, the station number of the module mounted on the lowest slot number is not set as a relay station number in routing parameter.	• Correct the routing parameter setting so that IP packets use the same path for both request and response transmission. • When multiple CC-Link IE modules with the same network number are connected in a multiple CPU system, set the module mounted on the lowest slot number as a controlled module that transfers IP packets. • When multiple CC-Link IE modules with the same network number are connected in a single or multiple CPU system, set the station number of the module mounted on the lowest slot number as a relay station number in routing parameter.	QCPU LCPU
$4A29_H$	IP communication test related error	The 3rd byte (Network No.) of the IP address of the request destination device overlapped with the 3rd byte of the IP address of the CPU module connected to the request source device by Ethernet.	• Check and correct the IP address settings of the built-in Ethernet ports of the CPU module. • Check and correct the IP address of the request destination device.	QCPU LCPU
$4A2A_H$	IP communication test related error	The IP address of a device on the CC-Link IE network, the Built-in Ethernet port QCPU, or the Built-in Ethernet port LCPU is not specified.	Specify the IP address of a device on the CC-Link IE network, the Built-in Ethernet port QCPU, or the Built-in Ethernet port LCPU.	QCPU LCPU
$4B00_H$	Target-related error	• An error occurred in the access destination or relay station. • The specified transfer setup (request destination module I/O number) is illegal.	• Take corrective action after checking the error that occurred at the specified access destination or the relay station to the accessed station. • Check the transfer setup (request destination module I/O number or programmable controller number) in the request data of the MC protocol, etc. • Check the occurring stop error and take the action.	QCPU LCPU
$4B01_H$	Target-related error	The target is not the No. 1 CPU of the multiple CPU system.	Execute the request for the No. 1 CPU of the multiple CPU system.	QCPU
$4B02_H$	Target-related error	The request is not addressed to the CPU module.	Perform operation for the module that can execute the specified function.	QCPU LCPU
$4B03_H$	Target-related error	• The specified route is not supported by the specified CPU module version. • The communication target CPU module is not mounted. • Devices that does not support the communications are connected on the specified route.	• Check whether the specified route is supported or not. • Check whether the CPU module is mounted/connected or not. • Check the occurring stop error and take the action.	QCPU LCPU
$4B04_H$	Target-related error	The specified transfer setup (request destination module I/O number) is not supported.	In the target setup, an illegal value is set as the start I/O number of the target module.	QCPU

Error code (Hexadecimal)	Error item	Error details	Corrective action	Corresponding CPU
$4C00_H$	Multiple CPU-related error	The specified device is unavailable for the motion CPU or outside the device range.	Check the request data contents.	QCPU
$4C08_H$	Multiple CPU-related error	There are a total of 33 or more DDWR and DDRD requests.	Execute again after reducing the number of DDWR and DDRD requests to be executed simultaneously.	QCPU
$4C09_H$	Multiple CPU-related error	The specification of the requested CPU module No. is illegal.	Check the request data contents.	QCPU
$4C10_H$	CPU module data backup/restoration function error	• Maximum storable capacity is exceeded. • Maximum number of storable files is exceeded. • Storable upper limit of the backup folder number is exceeded.	• Increase the free space of the SD memory card and CPU module, and then execute the processing again. • Delete files in the SD memory card and CPU module, and then execute the processing again. • Delete backup data in the SD memory card, and then execute the processing again.	QnUDV QnUDPV
$4C11_H$	CPU module data backup/restoration function error	• No SD memory card is inserted. • Removal and insertion of the SD memory card is being enabled by SM609 (Memory card remove/insert enable flag). • The SD memory card is being disabled by SM606 (SD memory card forced disable instruction).	• Insert or re-insert the SD memory card, and then execute the processing again. • Disable the removal and insertion of the SD memory card, and then execute the processing again. • Enable the SD memory card operation and then execute the processing again.	QnUDV QnUDPV
$4C12_H$	CPU module data backup/restoration function error	Writing/reading of backup data to/from the SD memory card failed.	• Check if the SD memory card is inserted, and execute the processing again. • Replace the SD memory card, and execute the processing again. • Restore with any other backup data because the backup data may have been corrupted.	QnUDV QnUDPV
$4C13_H$	CPU module data backup/restoration function error	Reading/writing of data from/to the CPU built-in memory completed with an error.	• Back up data in the CPU built-in memory, format the CPU memory, and write the data back to the original memory. Then, execute the data backup/restoration function. • The possible cause is a failure of the CPU module. Execute data restoration to another CPU module.	QnUDV QnUDPV
$4C14_H$	CPU module data backup/restoration function error	• The function cannot be executed because the file password 32 is set to the data. • The data which is same as the one set the file password 32 is restored to the restoration destination CPU module.	When using the CPU module data backup/restoration function, delete the file password 32 setting and then execute the function.	QnUDV QnUDPV
$4C15_H$	CPU module data backup/restoration function error	The functions that cannot be executed simultaneously such as the file transfer function (FTP), data backup/restoration function (iQ Sensor Solution function), and IP address change function are executed.	Execute again after a while.	QnUDV QnUDPV
$4C16_H$	CPU module data backup/restoration function error	• The automatic backup setting by specification of day and time is turned on while the setting value (automatic backup date and time) are out of range. • The automatic backup setting by specification of time and day of the week is turned on while the setting value (automatic backup time and day of the week) are out of range.	• Review the setting value (automatic backup date and time) and turn on the automatic backup setting by specification of day and time. • Review the setting value (automatic backup time and day of the week) and turn on the automatic backup setting by specification of time and day of the week.	QnUDV QnUDPV
$4C17_H$	CPU module data backup/restoration function error	A restoration is executed while the model names of the CPU module differs between the backup source and the restoration target.	Execute a restoration again for the CPU module whose name is same as the backup source CPU module.	QnUDV QnUDPV
$4C18_H$	CPU module data backup/restoration function error	A restoration is executed while the operating status of the CPU module is in RUN or PAUSE state.	Change the operating status of the CPU module to STOP state and then execute the restoration again.	QnUDV QnUDPV

Error code (Hexadecimal)	Error item	Error details	Corrective action	Corresponding CPU
$4C19_H$	CPU module data backup/restoration function error	• A restoration is executed while the system files (BKUPINF.QSL and BKUPDAT.QBK) are not structured properly. • File(s) in the system file information (BKUPINF.QSL) does not exist in the folder of backed up data. • A restoration is executed with the folder of backed up data in which the system files (BKUPINF.QSL, BKUPDAT.QBK) do not exist.	Restore with any other backup data because the backup data may have been corrupted.	QnUDV QnUDPV
$4C1A_H$	CPU module data backup/restoration function error	• The folder with the setting values of SD919 to SD921 (Restoration target folder) does not exist in the SD memory card. • The setting value of SD917 (Restoration target data setting) is out of range. • The value outside the specified range is set to SD919 to SD921.	• Check and correct the setting value of SD919 to SD921 and then execute the processing again. • Check and correct the setting value of SD917 and then execute the processing again.	QnUDV QnUDPV
$4C1B_H$	CPU module data backup/restoration function error	A restoration is executed while the CPU module status (such as programs, parameters, and file structure) of restoration destination is different from the status at the time of backup.	Check and correct the CPU module status to the one at the time of backup and then execute the restoration again. Change SD917 to all the target data of backup and restoration, and then execute the restoration again.	QnUDV QnUDPV
$4C1C_H$	CPU module data backup/restoration function error	• No SD memory card is inserted. • Removal and insertion of the SD memory card is being enabled by SM609 (Memory card remove/insert enable flag). • The SD memory card is being disabled by SM606 (SD memory card forced disable instruction). • The SD memory card is write-protected.	• Insert or re-insert the SD memory card, and then execute the processing again. • Disable the removal and insertion of the SD memory card, and then execute the processing again. • Enable the SD memory card operation and then execute the processing again. • Cancel the write protection and then execute the processing again.	QnUDV QnUDPV
$4C1D_H$	CPU module data backup/restoration function error	The CPU module is locked.	When using the CPU module data backup/restoration function, unlock the CPU module and then execute the function.	QnUDV QnUDPV
$4C1F_H$	CPU module data backup/restoration function error	The specified command cannot be executed because the CPU module data backup/restoration function is being executed.	After the CPU module data backup/restoration function is completed, execute the command again.	QnUDV QnUDPV
$4C21_H$	CPU module data backup/restoration function error	The number of backup data stored in an SD memory card exceeds the upper limit value.	• Delete backup data in the SD memory card, and execute the function again. • Check and correct the settings of the upper limit value of the number of backup data, and execute the function again.	QnUDV QnUDPV
$4C22_H$	CPU module data backup/restoration function error	Bit5 of SD910 is turned on while the set value of SD1928 is out of the allowable range.	After check and correct the set value of SD1928, turn on bit5 of SD910.	QnUDV QnUDPV
$4C23_H$	CPU module data backup/restoration function error	Upper limit value of the number of the backup data cannot be changed because a backup data folder already exists.	After deleting the backup data folder in the SD memory card and turning off bit5 of SD910 temporarily, turn on bit5 of SD910 again.	QnUDV QnUDPV
$4C24_H$	CPU module data backup/restoration function error	The data cannot be backed up because more backup data than the upper limit value of the number of backup data exists in the SD memory card.	• Delete the backup data exceeding the upper limit value, and execute the function again. • Check and correct the settings of the upper limit value, and execute the function again.	QnUDV QnUDPV
$4C25_H$	CPU module data backup/restoration function error	The data cannot be backed up because a program with a block password for which "Execution Program Protection Setting" has been enabled exists.	Clear "Execution Program Protection Setting" of the block password and execute the function again.	QnUDV QnUDPV
$4D00_H$	E-mail related error	Execution of the MC protocol command has failed because of the following error. • Format error • Data size error • Data count error • Unsupported command error	Check and correct the contents of the MC protocol command mail.	LCPU

Error code (Hexadecimal)	Error item	Error details	Corrective action	Corresponding CPU
$4D01_H$	E-mail related error	Execution of MC protocol command is disabled in parameter.	Check and correct the parameter setting.	LCPU
$4D20_H$	SLMP frame send instruction error	The execution/error completion type setting of the dedicated instruction is incorrect.	• Correct the execution/error completion type setting in control data, and execute the instruction again. • If an error still exists even after taking the above action, the possible cause is a hardware failure of the module. Please consult your local Mitsubishi representative.	QnUDV QnUDPV LCPU
$4D21_H$	SLMP frame send instruction error	The external device IP address setting of the dedicated instruction is incorrect.	Correct the IP address of the external device, and execute the instruction again.	QnUDV QnUDPV LCPU
$4D22_H$	SLMP frame send instruction error	The port number setting is incorrect.	Check and correct the port number.	QnUDV QnUDPV LCPU
$4D23_H$	SLMP frame send instruction error	The number of resends is specified incorrectly.	Check and correct the number of resends.	QnUDV QnUDPV LCPU
$4D24_H$	SLMP frame send instruction error	The arrival monitoring time setting is incorrect.	Set the arrival monitoring time within the allowable range.	QnUDV QnUDPV LCPU
$4D25_H$	SLMP frame send instruction error	Sending messages by using the SP.SLMPSND instruction has failed.	• Check the operation of the external device or switching hub. • The line may be congested with packets. Resend data after a while. • Check whether the cables are securely connected. • Check that there is no connection failure with the switching hub. • Execute a communication status test. If the test completes with an error, take an action to correct the error. • Check the module for error by conducting the module communication test. • Check whether the IP address specified as target is correct.	QnUDV QnUDPV LCPU
$4D26_H$	SLMP frame send instruction error	The CPU module was not able to receive a response to the request.	• Check and correct the response waiting time. • Check the external device operation. • Check whether the external device supports the function executed.	QnUDV QnUDPV LCPU
$4D27_H$	SLMP frame send instruction error	The CPU module received a response with the data length out of the range, which was sent by the SP.SLMPSND instruction.	• Correct the request data so that the response data length will be within the specified range, and execute the instruction again. • If the same error code is displayed again even after taking an action, please consult your local Mitsubishi representative.	QnUDV QnUDPV LCPU
$4D30_H$	Operation history function error	Since the operation history clearing is disabled, the data cannot be cleared.	Uncheck the box of "Disable clearing operation history" in the PLC parameter.	QnUDV QnUDPV
$4D31_H$	Operation history function error	Since the operation history file is being accessed by other devices, the operation history clearing is failed.	Wait for a while and retry.	QnUDV QnUDPV
$4D32_H$	Operation history function error	Access to the operation history file is failed.	• Check that the SD memory card is properly inserted. • Check that the SD memory card is not forcibly disabled. • Check that the write protect switch is not locked.	QnUDV QnUDPV

Error code (Hexadecimal)	Error item	Error details	Corrective action	Corresponding CPU
$4D33_H$	Operation history function error	Displaying the operation history file is failed.	• Check that the SD memory card is properly inserted. • Check that the SD memory card is not forcibly disabled. • Check that an operation history file with a different capacity from the one set in the operation history setting does not exist in the saving destination memory.	QnUDV QnUDPV
$4D34_H$	Operation history function error	Since the operation history function is disabled, the operation history cannot be read.	Enable the operation history function and retry.	QnUDV QnUDPV
$7D00_H$	Predefined protocol related error (built-in/adapter serial)	Setting value of protocol No. is out of range in the control data of S(P).CPRTCL instruction.	Check the setting value of protocol No.	LCPU
$7D02_H$	Predefined protocol related error (built-in/adapter serial)	• Protocol was executed while SM1332 is off. • S(P).CPRTCL instruction was executed while the protocol setting data was checking. • S(P).CPRTCL instruction was executed while error occurred in the protocol setting data. • Protocol setting file has not been written to valid drive.	• Execute the S(P).CPRTCL instruction after SM1332 is turned on. • Write the protocol setting data after turning the CPU to STOP so that S(P).CPRTCL instruction is not concurrently executed. • Execute the S(P).CPRTCL instruction after rewriting protocol setting data to CPU. • If the same error is displayed again after rewriting, the cause is a hardware failure of the CPU module. Please consult your local Mitsubishi representative.	LCPU
$7D10_H$	Predefined protocol related error (built-in/adapter serial)	• Protocol No. which was not registered to CPU was specified at S(P).CPRTCL instruction control data. • S(P).CPRTCL instruction was executed though the protocol setting data have not been written to CPU.	• Check whether the specified protocol No. is correct. • Check whether the specified protocol No. has been registered by the value for the with/without protocol registration (SD1342 to SD1349). • Execute the S(P).CPRTCL instruction again after rewriting the protocol setting data.	LCPU
$7D12_H$	Predefined protocol related error (built-in/adapter serial)	• Transmission monitoring time was up. • Failed to send though the system retried to send for the maximum number of retries.	Check whether the cable is connected.	LCPU
$7D13_H$	Predefined protocol related error (built-in/adapter serial)	Receive wait time was up.	• Check whether the cable is connected. • Check whether any errors are found in the target device. • Check whether the sending data from the target device has not been interrupted. • Check whether any of data were lost because of receive error. • Check whether the send data (packet) from the target device is correct.	LCPU
$7D16_H$	Predefined protocol related error (built-in/adapter serial)	• S(P).CPRTCL instruction ended abnormally because the cancel request was accepted during protocol execution. • S(P).CPRTCL instruction ended abnormally because checking protocol setting data was executed during S(P).CPRTCL instruction execution.	• Check the canceled protocol in S(P).CPRTCL instruction control data (Number of executions), remove the cause of cancel operation. • Write the protocol setting data after turning the CPU to STOP so that S(P).CPRTCL instruction is not concurrently executed.	LCPU
$7D17_H$	Predefined protocol related error (built-in/adapter serial)	Received the packet of the data length over 2048 bytes.	• Check the send data from external devices. • If the data send from external devices exceed 2048 bytes, split it into several files and send them separately.	LCPU
$7D18_H$	Predefined protocol related error (built-in/adapter serial)	The data (digit) corresponding to the conversion variables (variable number of data) was not enough when data was received in the protocol including the packet of conversion variables (variable number of data).	• Check the send data from external devices. • If protocol has been edited, check whether any errors found for the digit setting value in the packet format of the target device.	LCPU

Error code (Hexadecimal)	Error item	Error details	Corrective action	Corresponding CPU
$7D19_H$	Predefined protocol related error (built-in/adapter serial)	The data corresponding to the conversion variables (fixed number of data and variable number of digits) was 0-bite or exceeded the maximum number of digits when data was received in the protocol including the packet of conversion variables (fixed number of data and variable number of digits).	• Check the send data from external devices. • If protocol has been edited, check whether any errors found for the digit setting value in the packet format of the target device.	LCPU
$7D1A_H$	Predefined protocol related error (built-in/adapter serial)	Data length does not match between the data length shown by length and the one of conversion variables in the received data from external devices.	• Check the send data from external devices. (1) Check whether the length value is correct. (2) Check whether any of data were lost in conversion variables. • If protocol has been edited, check whether any errors found for the conversion variables in the packet format of the target device.	LCPU
$7D1B_H$	Predefined protocol related error (built-in/adapter serial)	The data corresponding to the conversion variables exceeded the CPU capable range when data was received in the protocol including the packet of conversion variables.	• Check the send data from external devices. • If protocol has been edited, check whether any errors found for the conversion size setting in the packet format of the target device. (1) If the value exceeds the word size, change the conversion size to the one of double word. (2) If the value exceeds the double word size, change the elements to the non-conversion variables.	LCPU
$7D20_H$	Predefined protocol related error (built-in/adapter serial)	Setting value in Data Length Storage Area, Data Quantity Storage Area is out of range.	• Check the maximum data length for Data Length Storage Area, reset a value within the range. • Check the maximum number of data for Data Quantity Storage Area, reset a value within the range.	LCPU
$7D21_H$	Predefined protocol related error (built-in/adapter serial)	• Decimal point position for variable point is out of range. • Number of decimals is bigger than the one of Number of digits per data.	• Check the decimal point position. • Check the number of digits, set the decimal point position to the one less than the number of digits.	LCPU
$7F20_H$	Predefined protocol related error (built-in/adapter serial)	• Unable to convert the data to the binary one when data was received in the protocol including the packet of conversion variables. • Unable to convert the data corresponding to check code to the binary one when data was received in the protocol including the packet of check code (ASCII Hexadecimal or ASCII Decimal).	• Communicate again after checking the send message, changing it. • If protocol has been edited, check whether any errors found for the setting value of the contents, sign character, number of decimals, delimiter or digit in the packet format of the target device. • If protocol has been edited, check whether any errors found for the type of check code or data length in the packet format of the target device.	LCPU
$7F24_H$	Predefined protocol related error (built-in/adapter serial)	• Calculated sumcheck does not match the received one. • Calculated horizontal parity code does not match the received one. • Calculated check code does not match the received one.	• Check the sum check of the target device. • Check the horizontal parity code of the target device. • Check the check code (sum check, horizontal parity code, CRC-16) of the target device. • If protocol has been edited, check whether any errors found for the process method of check code, code type, data length, data order, complement calculation and calculation range in the packet format of the target device.	LCPU
$7F67_H$	Predefined protocol related error (built-in/adapter serial)	CPU received the next data before completing receiving process.	• Communicate again after slowing the communication speed. • Check whether momentary power failure has not occurred at the station connected to CPU. (Able to check by SD1005 of special register) Remove the cause if momentary power failure has occurred.	LCPU

Error code (Hexadecimal)	Error item	Error details	Corrective action	Corresponding CPU
$7F68_H$	Predefined protocol related error (built-in/adapter serial)	• Setting for stop bit is not correct. • Line could not establish a secure connection by the ON/OFF operation of the Target Station. • Noise is generated in line. • In multi-drop connection, data were simultaneously sent from multiple devices.	• Match the setting between CPU and the target device. • Take noise reduction measures. • Provide interlocks so that data are not simultaneously sent from multiple devices in multi-drop connection.	LCPU
$7F69_H$	Predefined protocol related error (built-in/adapter serial)	• Setting for parity bit is not correct. • Line could not establish a secure connection by the ON/OFF operation of the Target Station. • Noise is generated in line. • In multi-drop connection, data were simultaneously sent from multiple devices.	• Match the setting between CPU and the target device. • Take noise reduction measures. • Provide interlocks so that data are not simultaneously sent from multiple devices in multi-drop connection.	LCPU
$7F6A_H$	Predefined protocol related error (built-in/adapter serial)	Skipped the receive data because of the overflow of receive buffer.	Clear the receive buffer by executing the Predefined protocol with data receiving.	LCPU
$7FC8_H$	Predefined protocol related error (built-in/adapter serial)	• Invalid setting was found in edited protocol. • Unsupported function is included in the protocol setting data written to the CPU module. • The protocol setting data written to the CPU module is corrupted.	Check the protocol setting data and register it again.	LCPU
$7FF2_H$	Predefined protocol related error (built-in/adapter serial)	In executable instruction under the current predefined protocol setting.	Check the predefined protocol setting.	LCPU
$C055_H$	iQ Sensor Solution related error	System error	• Check the operating status and connection status of each device supporting iQ Sensor Solution. • Check the connection status of each Ethernet cable and the hub. • Check the line status of Ethernet. • Reset the CPU module and devices supporting iQ Sensor Solution, and execute the function again. • If the same error code is displayed again even after the above actions are taken, please consult the manufacturer of the device supporting iQ Sensor Solution.	QnUDV QnUDPV LCPU
$C056_H$	iQ Sensor Solution related error	System error	• Check the operating status and connection status of each device supporting iQ Sensor Solution. • Check the connection status of each Ethernet cable and the hub. • Check the line status of Ethernet. • Reset the CPU module and devices supporting iQ Sensor Solution, and execute the function again. • If the same error code is displayed again even after the above actions are taken, please consult the manufacturer of the device supporting iQ Sensor Solution.	QnUDV QnUDPV LCPU
$C059_H$	iQ Sensor Solution related error	The function not supported by the target device supporting iQ Sensor Solution was executed.	Check the version of the device supporting iQ Sensor Solution.	QnUDV QnUDPV LCPU
$C05C_H$	iQ Sensor Solution related error	• The communication setting value is out of the range. • The communication setting item not supported by the target device supporting iQ Sensor Solution is set. • The setting item required for the target device supporting iQ Sensor Solution is not set.	Review the settings, and execute the function again.	QnUDV QnUDPV LCPU

Error code (Hexadecimal)	Error item	Error details	Corrective action	Corresponding CPU
$C061_H$	iQ Sensor Solution related error	System error	• Check the operating status and connection status of each device supporting iQ Sensor Solution. • Check the connection status of each Ethernet cable and the hub. • Check the line status of Ethernet. • Reset the CPU module and devices supporting iQ Sensor Solution, and execute the function again. • If the same error code is displayed again even after the above actions are taken, please consult the manufacturer of the device supporting iQ Sensor Solution.	QnUDV QnUDPV LCPU
$C080_H$	MELSOFT connection extended setting related error	The target IP address is not obtained in MELSOFT connection extended setting.	Set the station number <-> IP information to the CPU module.	QnUDV QnUDPV
$C086_H$	MELSOFT connection extended setting related error	A received message exceeds the receptible size.	Correct the size of the send message of request source.	QnUDV QnUDPV
$C0C7_H$	Predefined protocol related error (Ethernet)	System error.	• Take countermeasures such as network isolation, reduction the number of data sends and the like, so that it reduces the load of Ethernet. • Contact to network administrator to reduce the load of Ethernet line. • Check the line status by PING test from the target device. • Execute again. If the same error code is displayed, please consult your local Mitsubishi representative.	QnUDV QnUDPV LCPU
$C0D0_H$	MELSOFT connection extended setting related error	The data length is specified incorrectly.	Check and correct the specified value of the data length.	QnUDV QnUDPV
$C0D3_H$, $C0D4_H$	MELSOFT connection extended setting related error	Number of relay stations of communications relayed thorough Ethernet, CC-Link IE Controller Network, CC-Link IE Field Network and MELSECNET/H exceeds the allowable number.	• Check the specified value of the communication destination. • Check and correct the setting value of station No. <-> IP Information between host station and target of the communications.	QnUDV QnUDPV
$C0D6_H$	MELSOFT connection extended setting related error	Network number and station number are specified incorrectly.	• Check and correct the specification detail of the communication destination. • Check and correct the specified value of the communication destination.	QnUDV QnUDPV
$C0DC_H$	MELSOFT connection extended setting related error	System error (OS has detected some error.)	• Check that the power supply module and the CPU module are mounted on the base unit properly. • Check that the system is operating within the general specifications of the CPU module. • Check whether the power capacity is sufficient. • Reset the CPU module. • Execute again. If the same error code is displayed, the cause is a hardware failure of the CPU module. Please consult your local Mitsubishi representative.	QnUDV QnUDPV
$C101_H$	E-mail related error	DNS client response timeout error	• Check the DNS server address setting. • Check that the communications with the DNS server is enabled by using the PING command. • Check that the own station IP address and the DNS server IP address are in the same class. (If not, check the router setting.)	LCPU

Error code (Hexadecimal)	Error item	Error details	Corrective action	Corresponding CPU
$C111_H$	E-mail related error	DNS client response timeout error	• Check the connection status of each cable and the hub. • Check that the communications with the DNS server is enabled by using the PING command.	LCPU
$C119_H$	E-mail related error	There is no incoming mail.	Check SM1662 if there is any incoming mail on the server.	LCPU
$C11B_H$	E-mail related error	After e-mail was sent, an error mail was returned from the destination mail server.	• Receive e-mail with unknown destination or unknown destination server from the SMTP server. (Received mail is stored.) • Check that the e-mail address (local part or domain name) set in parameter or e-mail address table is correct. • Check that the mail address (local part or domain name) is set to the destination mail server.	LCPU
$C120_H$	E-mail related error	Connection to the SMTP server cannot be opened. (TCP connection timeout error)	• Check the port number of the SMTP server. • Check that the communications with the SMTP server is enabled by using the PING command.	LCPU
$C121_H$	E-mail related error	The CPU module cannot communicate with the SMTP server. (Error response) (TCP connection error)	Check that the SMTP server is not busy.	LCPU
$C124_H$	E-mail related error	The response from the SMTP server timed out. (SMTP state transition timeout error)	• Check that the SMTP server is operating correctly. • Check that there is no load on the network.	LCPU
$C126_H$	E-mail related error	Connection to the SMTP server cannot be closed. (Failed-to-close-connection error)	• Check that the SMTP server is operating correctly. • Check that there is no load on the network.	LCPU
$C13D_H$	E-mail related error	SMTP server authentication error	• Check that the account name and password of the SMTP server are correctly set. • Check the operating status of the SMTP server.	LCPU
$C13E_H$	E-mail related error	SMTP server authentication unsupported error	• Check that the SMTP server supports SMTP Authentication. • Change the authentication setting in parameter. (Deselect the "Authenticate" checkbox, or select "Use POP before SMTP").	LCPU
$C140_H$	E-mail related error	Connection to the POP3 server cannot be opened. (TCP connection timeout error)	• Check the port number of the POP3 server. • Check that the communications with the POP3 server is enabled by using the PING command.	LCPU
$C141_H$	E-mail related error	The CPU module cannot communicate with the POP3 server. (Error response) (TCP connection error)	Check that the POP3 server is not busy.	LCPU
$C144_H$	E-mail related error	The CPU module was not able to receive a response from the POP3 server. (POP3 state transition timeout error)	• Check that the POP3 server is operating correctly. • Check that there is no load on the network.	LCPU
$C146_H$	E-mail related error	Connection to the POP3 server cannot be closed. (Failed-to-close-connection error)	• Check that the POP3 server is operating correctly. • Check that there is no load on the network.	LCPU
$C151_H$	E-mail related error	The e-mail address set to the CPU module in E-mail Setting parameter differs from the account name set to the mailbox on the server side. (User mailbox specification error)	Correct the e-mail address set to the CPU module so that the account name matches the one set to the server.	LCPU
$C152_H$	E-mail related error	The password set to the CPU module in E-mail Setting parameter differs from the one set on the server side. (Password setting error)	Correct the password set to the CPU module so that it matches the one set to the server.	LCPU
$C170_H$	E-mail related error	An error is returned from the DNS server.	• Check that the IP address of the DNS server is set correctly. • Check that the mail server name (SMTP server name, POP server name) is set correctly. • Check with a network manager if the server set as a DNS server is operating correctly.	LCPU

Error code (Hexadecimal)	Error item	Error details	Corrective action	Corresponding CPU
$C1B6_H$	E-mail related error	The destination number setting is incorrect. (Destination number setting error)	• Check and correct the destination number setting. • Check and correct the e-mail address setting in parameter or e-mail address table.	LCPU
$C400_H$	Predefined protocol related error (Ethernet)	• SP.ECPRTCL instruction was executed before the Predefined protocol ready (SM1354) is turned ON. • SP.ECPRTCL instruction was executed while error occurred in the protocol setting data.	• Execute the SP.ECPRTCL instruction after the Predefined protocol ready (SM1354) is turned ON. • Execute the SP.ECPRTCL instruction after rewriting protocol setting data to CPU. • If the same error code is displayed again after rewriting, the cause is a hardware failure of the CPU module. Please consult your local Mitsubishi representative.	QnUDV QnUDPV LCPU
$C401_H$	Predefined protocol related error (Ethernet)	Executed protocol No. has not been registered.	• Execute the protocol again after checking the specified protocol No. • Register the corresponding protocol to the specified protocol No.	QnUDV QnUDPV LCPU
$C402_H$	Predefined protocol related error (Ethernet)	Protocol setting data is invalid.	Check the protocol setting data and register it again.	QnUDV QnUDPV LCPU
$C404_H$	Predefined protocol related error (Ethernet)	SP.ECPRTCL instruction ended abnormally because the cancel request was accepted during protocol execution.	Check the canceled protocol in SP.ECPRTCL instruction control data (number of executions) and remove the cause of cancel operation.	QnUDV QnUDPV LCPU
$C405_H$	Predefined protocol related error (Ethernet)	Setting value of protocol No. specified when protocol was executed is out of range.	Execute the protocol again after checking the specified protocol No.	QnUDV QnUDPV LCPU
$C410_H$	Predefined protocol related error (Ethernet)	Receive wait time was up.	• Check whether the cable is connected. • Check the setting of specified connection No., execute protocol again if there aren't any problem found. • Check whether any errors are found in the target device. • Check whether the sending data from the target device has not been interrupted. • Check whether any of data were lost because of receive error. • Check whether the send data (packet) from the target device is correct.	QnUDV QnUDPV LCPU
$C417_H$	Predefined protocol related error (Ethernet)	Setting value in Data Length Storage Area, Data Quantity Storage Area is out of range.	• Check the maximum data length for Data Length Storage Area, reset a value within the range. • Check the maximum number of data for Data Quantity Storage Area, reset a value within the range.	QnUDV QnUDPV LCPU
$C430_H$	Predefined protocol related error (Ethernet)	Protocol setting data check occurred while SP.ECPRTCL instruction is executed.	• Cancel the instruction and check the protocol setting data while SP.ECPRTCL is being executed.	QnUDV QnUDPV LCPU
$C431_H$	Predefined protocol related error (Ethernet)	Connection close occurred while SP.ECPRTCL instruction is executed.	• Check the behavior of the target device. • Check the connection open status with the target device. • Execute the instruction after opening the connection again with the target device.	QnUDV QnUDPV LCPU
$CEE0_H$	iQ Sensor Solution related error	While the automatic detection is being performed, the automatic detection or another iQ Sensor Solution function was executed by another peripheral.	Execute the function after the automatic detection that is currently being performed ends.	QnUDV QnUDPV LCPU

Error code (Hexadecimal)	Error item	Error details	Corrective action	Corresponding CPU
$CEE1_H$	iQ Sensor Solution related error	System error	• Check the operating status and connection status of each device supporting iQ Sensor Solution. • Check the connection status of each Ethernet cable and the hub. • Check the line status of Ethernet. • Reset the CPU module and devices supporting iQ Sensor Solution, and execute the function again. • If the same error code is displayed again even after the above actions are taken, please consult the manufacturer of the device supporting iQ Sensor Solution.	QnUDV QnUDPV LCPU
$CEE2_H$	iQ Sensor Solution related error	System error	• Check the operating status and connection status of each device supporting iQ Sensor Solution. • Check the connection status of each Ethernet cable and the hub. • Check the line status of Ethernet. • Reset the CPU module and devices supporting iQ Sensor Solution, and execute the function again. • If the same error code is displayed again even after the above actions are taken, please consult the manufacturer of the device supporting iQ Sensor Solution.	QnUDV QnUDPV LCPU
$CF10_H$	iQ Sensor Solution related error	System error	• Check the operating status and connection status of each device supporting iQ Sensor Solution. • Check the connection status of each Ethernet cable and the hub. • Check the line status of Ethernet. • Reset the CPU module and devices supporting iQ Sensor Solution, and execute the function again. • If the same error code is displayed again even after the above actions are taken, please consult the manufacturer of the device supporting iQ Sensor Solution.	QnUDV QnUDPV LCPU
$CF20_H$	iQ Sensor Solution related error	• The communication setting value is out of the range. • The communication setting item not supported by the target device supporting iQ Sensor Solution is set. • The setting item required for the target device supporting iQ Sensor Solution is not set.	Review the settings, and execute the function again.	QnUDV QnUDPV LCPU
$CF30_H$	iQ Sensor Solution related error	A parameter not supported by the target device supporting iQ Sensor Solution was specified.	Check the version of the device supporting iQ Sensor Solution.	QnUDV QnUDPV LCPU
$CF31_H$	iQ Sensor Solution related error	System error	• Check the operating status and connection status of each device supporting iQ Sensor Solution. • Check the connection status of each Ethernet cable and the hub. • Check the line status of Ethernet. • If the same error code is displayed again even after the above actions are taken, please consult the manufacturer of the device supporting iQ Sensor Solution.	QnUDV QnUDPV LCPU

Error code (Hexadecimal)	Error item	Error details	Corrective action	Corresponding CPU
$CF41_H$	iQ Sensor Solution related error	The information required for monitoring cannot be read from the device supporting iQ Sensor Solution.	• Check the operating status and connection status of each device supporting iQ Sensor Solution. • Reset the devices supporting iQ Sensor Solution, and execute the function again. • If the same error code is displayed again even after the above actions are taken, please consult the manufacturer of the device supporting iQ Sensor Solution.	QnUDV QnUDPV LCPU
$CF50_H$	iQ Sensor Solution related error	System error	• Check the operating status and connection status of each device supporting iQ Sensor Solution. • Check the connection status of each Ethernet cable and the hub. • Check the line status of Ethernet. • Reset the CPU module and devices supporting iQ Sensor Solution, and execute the function again. • If the same error code is displayed again even after the above actions are taken, please consult the manufacturer of the device supporting iQ Sensor Solution.	QnUDV QnUDPV LCPU
$CF51_H$	iQ Sensor Solution related error	The function cannot be executed because the function from another peripheral is being executed.	Execute the function again after a while.	QnUDV QnUDPV LCPU
$CF52_H$	iQ Sensor Solution related error	The information required for monitoring cannot be read from the device supporting iQ Sensor Solution.	• Check the operating status and connection status of each device supporting iQ Sensor Solution. • Reset the devices supporting iQ Sensor Solution, and execute the function again. • If the same error code is displayed again even after the above actions are taken, please consult the manufacturer of the device supporting iQ Sensor Solution.	QnUDV QnUDPV LCPU
$CF53_H$	iQ Sensor Solution related error	System error	• Check the operating status and connection status of each device supporting iQ Sensor Solution. • Check the connection status of each Ethernet cable and the hub. • Check the line status of Ethernet. • Reset the CPU module and devices supporting iQ Sensor Solution, and execute the function again. • If the same error code is displayed again even after the above actions are taken, please consult the manufacturer of the device supporting iQ Sensor Solution.	QnUDV QnUDPV LCPU
$CF54_H$	iQ Sensor Solution related error	System error	• Check the operating status and connection status of each device supporting iQ Sensor Solution. • Check the connection status of each Ethernet cable and the hub. • Check the line status of Ethernet. • Reset the CPU module and devices supporting iQ Sensor Solution, and execute the function again. • If the same error code is displayed again even after the above actions are taken, please consult the manufacturer of the device supporting iQ Sensor Solution.	QnUDV QnUDPV LCPU

Error code (Hexadecimal)	Error item	Error details	Corrective action	Corresponding CPU
$CF55_H$	iQ Sensor Solution related error	System error	• Check the operating status and connection status of each device supporting iQ Sensor Solution. • Check the connection status of each Ethernet cable and the hub. • Check the line status of Ethernet. • Reset the CPU module and devices supporting iQ Sensor Solution, and execute the function again. • If the same error code is displayed again even after the above actions are taken, please consult the manufacturer of the device supporting iQ Sensor Solution.	QnUDV QnUDPV LCPU
$CF56_H$	iQ Sensor Solution related error	System error	• Check the operating status and connection status of each device supporting iQ Sensor Solution. • Check the connection status of each Ethernet cable and the hub. • Check the line status of Ethernet. • Reset the CPU module and devices supporting iQ Sensor Solution, and execute the function again. • If the same error code is displayed again even after the above actions are taken, please consult the manufacturer of the device supporting iQ Sensor Solution.	QnUDV QnUDPV LCPU
$CF60_H$	iQ Sensor Solution related error	The backup processing does not start when the iQ Sensor Solution function (data backup) is executed.	• Check the operating status and connection status of each device supporting iQ Sensor Solution. • Reset the CPU module and devices supporting iQ Sensor Solution, and execute the function again. • If the same error code is displayed again even after the above actions are taken, please consult the manufacturer of the device supporting iQ Sensor Solution.	QnUDV QnUDPV LCPU
$CF61_H$	iQ Sensor Solution related error	The backup processing does not start when the iQ Sensor Solution function (data backup) is executed.	• Check the operating status and connection status of each device supporting iQ Sensor Solution. • Reset the CPU module and devices supporting iQ Sensor Solution, and execute the function again. • If the same error code is displayed again even after the above actions are taken, please consult the manufacturer of the device supporting iQ Sensor Solution.	QnUDV QnUDPV LCPU
$CF62_H$	iQ Sensor Solution related error	The backup processing does not stop after the iQ Sensor Solution function (data backup) is executed.	• Check the operating status and connection status of each device supporting iQ Sensor Solution. • Reset the CPU module and devices supporting iQ Sensor Solution, and execute the function again. • If the same error code is displayed again even after the above actions are taken, please consult the manufacturer of the device supporting iQ Sensor Solution.	QnUDV QnUDPV LCPU
$CF63_H$	iQ Sensor Solution related error	When the restoration of the iQ Sensor Solution function (data backup/restoration) is performed, the backup source device and the restoration target device do not match.	• Check the manufacturers, models, and versions of the specified backup source device supporting iQ Sensor Solution and the restoration target device supporting iQ Sensor Solution.	QnUDV QnUDPV LCPU

Error code (Hexadecimal)	Error item	Error details	Corrective action	Corresponding CPU
$CF64_H$	iQ Sensor Solution related error	The restoration processing does not start when the iQ Sensor Solution function (data restoration) is executed.	• Check the operating status and connection status of each device supporting iQ Sensor Solution. • Reset the CPU module and devices supporting iQ Sensor Solution, and execute the function again. • If the same error code is displayed again even after the above actions are taken, please consult the manufacturer of the device supporting iQ Sensor Solution.	QnUDV QnUDPV LCPU
$CF65_H$	iQ Sensor Solution related error	The restoration processing does not stop when the iQ Sensor Solution function (data restoration) is executed.	• Check the operating status and connection status of each device supporting iQ Sensor Solution. • Reset the CPU module and devices supporting iQ Sensor Solution, and execute the function again. • If the same error code is displayed again even after the above actions are taken, please consult the manufacturer of the device supporting iQ Sensor Solution.	QnUDV QnUDPV LCPU
$CF70_H$	iQ Sensor Solution related error	An error has occurred on the Ethernet communication route.	• Check the operating status and connection status of each device supporting iQ Sensor Solution. • Check the connection status of each Ethernet cable and the hub.	QnUDV QnUDPV LCPU
$CF71_H$	iQ Sensor Solution related error	Timeout error	• Check the operating status and connection status of each device supporting iQ Sensor Solution. • The line may be busy. Execute the function after a while.	QnUDV QnUDPV LCPU
$CFC0_H$	Cyclic transmission error (master station)	Cyclic transmission cannot be executed because multiple master stations exist in the same network address.	Check the existence of master stations on the network.	QnUDV QnUDPV LCPU
$CFC1_H$	Cyclic transmission error (master station)	Cyclic transmission cannot be executed because an error has occurred during cyclic transmission.	• Take measures to reduce noise. • Execute again. If the same error code is displayed, please consult your local Mitsubishi representative.	QnUDV QnUDPV LCPU
$CFC8_H$	Cyclic transmission error (master station)	Cyclic transmission cannot be executed because a device station controlled by another master station exists.	• Check the existence of master stations on the network. • Check the device station where the error has occurred.	QnUDV QnUDPV LCPU
$CFC9_H$	Cyclic transmission error (master station)	Cyclic transmission cannot be executed because device stations having the same IP address exist in the same network address.	• Check the existence of device stations on the network. • Check the device station where the error has occurred.	QnUDV QnUDPV LCPU
$CFD0_H$	Master station error	The port number (61450) used in CC-Link IE Field Network Basic has already been used.	Check and correct the port number used in the Ethernet function.	QnUDV QnUDPV LCPU
$CFD1_H$	Master station error	An invalid value has been set in subnet mask.	Check and correct the parameter setting.	QnUDV QnUDPV LCPU
$CFD2_H$	Master station error	Cyclic transmission cannot be executed because any PLC parameter setting has been changed during cyclic transmission.	Reset the CPU module.	QnUDV QnUDPV LCPU
$CFE0_H$	Cyclic transmission error (device station)	The cyclic transmission was executed for the device station controlled by another master station.	• Check the existence of master stations on the network. • Check the device station where the error has occurred.	QnUDV QnUDPV LCPU
$CFE1_H$	Cyclic transmission error (device station)	The unusable number of occupied stations has been specified from master station.	Check the number of occupied stations setting in master station parameter (Network Configuration Settings).	QnUDV QnUDPV LCPU

Error code (Hexadecimal)	Error item	Error details	Corrective action	Corresponding CPU
$CFE8_H$	Cyclic transmission error (device station)	There is no response from a device station.	• Check the device station disconnection detection setting in master station parameter (Network Configuration Settings). • Check the existence of device stations on the network. • Check the disconnected device station. • Take measures to reduce noise.	QnUDV QnUDPV LCPU
$CFE9_H$	Cyclic transmission error (device station)	Device stations having the same IP address exist in the same network address.	Check the device station where the error has occurred.	QnUDV QnUDPV LCPU
$CFF0_H$	Device station error	An error has occurred in a device station.	Check the device station where the error has occurred.	QnUDV QnUDPV LCPU

*1 To check the logging status, use the CPU Module Logging Configuration Tool. For how to use the CPU Module Logging Configuration Tool, refer to the following.
QnUDVCPU/LCPU User's Manual (Data Logging Function)

*2 Built-in Ethernet port QCPU and Built-in Ethernet port LCPU

Appendix 2 List of Special Relay Areas

The special relay (SM) is an internal relay whose application is fixed in the programmable controller. For this reason, the special relay cannot be used in the same way as other internal relays are used in sequence programs. However, the bit of the special relay can be turned on or off as needed to control the CPU module.

The following table shows how to read the special relay list.

Item	Description
Number	Special relay number
Name	Special relay name
Meaning	Contents of special relay
Explanation	Detailed description of special relay
Set by (When Set)	Set side and set timing of special relay <Set by> • S: Set by system • U: Set by user (using a program, programming tool, GOT, or test operation from other external devices) • S/U: Set by both system and user <When Set> The following shows the set timing when the special relay is set by system. • Every END processing: Set during every END processing • Initial: Set during initial processing (after power-on or status change from STOP to RUN) • Status change: Set when the operating status is changed • Error: Set if an error occurs • Instruction execution: Set when an instruction is executed • Request: Set when requested by a user (using the special relay) • When system is switched: Set when the system is switched (between the control system and the standby system) • At write: Set when data are written to the CPU module by a user • During END processing: Set during END processing
Corresponding CPU	CPU module supporting the special relay • QCPU: All the Q series CPU modules • Q00J/Q00/Q01: Basic model QCPU • Qn(H): High Performance model QCPU • QnPH: Process CPU • QnPRH: Redundant CPU • QnU: Universal model QCPU • QnUDV: High-speed Universal model QCPU • QnUDPV: Universal model Process CPU • Q00UJ/Q00U/Q01U: Q00UJCPU, Q00UCPU, and Q01UCPU • LCPU: All the L series CPU modules • CPU module model: Only the specified model (Example: Q02UCPU, L26CPU-BT)
Corresponding ACPU M9□□□	• Special relay (M9□□□) supported by the ACPU ("M9□□□ format change" indicates the one whose application has been changed. Incompatible with the Q00J/Q00/Q01 and QnPRH.) • "New" indicates the one added for the QCPU or LCPU.

For details on the following items, refer to the following.

- For network related items: 🕮 Manuals for each network module
- For SFC programs: 🕮 MELSEC-Q/L/QnA Programming Manual (SFC)

Point

Do not change the values of special relay set by system using a program or by test operation. Doing so may result in system down or communication failure.

(1) Diagnostic information

Number	Name	Meaning	Explanation	Set by (When Set)	Corresponding ACPU M9□□□	Corresponding CPU
SM0	Diagnostic errors	OFF: No error ON: Error	• This relay turns on if an error is detected by diagnostics. (Also turns on if an error is detected by an annunciator or the CHK instruction.) • This relay remains on even after the system returns to normal.	S (Error)	New	Qn(H) QnPH QnPRH
			• This relay turns on if an error is detected by diagnostics. (Also turns on if an error is detected by an annunciator.) • This relay remains on even after the system returns to normal.			Q00J/Q00/Q01 QnU LCPU
SM1	Self-diagnostic error	OFF: No error ON: Error	• This relay turns on if an error is detected by self-diagnostics. (Remains off if an error is detected by an annunciator or the CHK instruction.) • This relay remains on even after the system returns to normal.	S (Error)	M9008	Qn(H) QnPH QnPRH
			• This relay turns on if an error is detected by self-diagnostics. (Remains off if an error is detected by an annunciator.) • This relay remains on even after the system returns to normal.		New	Q00J/Q00/Q01 QnU LCPU
SM5	Error common information	OFF: No error common information ON: Error common information	This relay turns on if error common information data exists when SM0 turns on.	S (Error)	New	QCPU LCPU
SM16	Error individual information	OFF: No error individual information ON: Error individual information	This relay turns on if error individual information data exists when SM0 turns on.	S (Error)	New	QCPU LCPU
SM50	Error reset	OFF → ON:Error clear	Conducts error reset operation	U	New	QCPU LCPU
SM51	Battery low latch	OFF: Normal ON: Battery low	• This relay turns on if the battery voltage of the CPU module or the memory card drops below the rated value. • This relay remains on even after the battery voltage returns to normal. • The on/off timing is synchronized with that of the BAT. LED.	S (Error)	M9007	Qn(H) QnPH QnPRH QnU (except the QnUDV and QnUDPV)
			• This relay turns on if the battery voltage of the CPU module drops below the rated value. • This relay remains on even after the battery voltage returns to normal. • The on/off timing is synchronized with that of the BAT. LED.		New	QnUDV QnUDPV LCPU
			• This relay turns on if the battery voltage of the CPU module drops below the rated value. • This relay remains on even after the battery voltage returns to normal. • The on/off timing is synchronized with that of the ERR. LED.		New	Q00J/Q00/Q01
SM52	Battery low	OFF: Normal ON: Battery low	This relay has the same specifications as those of SM51 except that this relay turns off after the battery voltage returns to normal.	S (Error)	M9006	QCPU LCPU

Number	Name	Meaning	Explanation		Set by (When Set)	Corresponding ACPU M9□□□	Corresponding CPU
SM53	AC/DC DOWN detection	OFF: AC/DC DOWN not detected ON: AC/DC DOWN detected	This relay turns on if a momentary power failure within 20ms occurs during use of an AC power supply module. This relay is reset when the CPU module is powered off and then on.		S (Error)	M9005	QCPU
			This relay turns on if a momentary power failure within 10ms occurs during use of an AC power supply module. This relay is reset when the CPU module is powered off and then on.				LCPU
			This relay turns on if a momentary power failure within 10ms occurs during use of a DC power supply module. This relay is reset when the CPU module is powered off and then on.				QCPU LCPU
SM56	Operation error	OFF: Normal ON: Operation error	• This relay turns on if an operation error occurs. • This relay remains on even after the system returns to normal.		S (Error)	M9011	QCPU LCPU
SM60	Blown fuse detection	OFF: Normal ON: Module with blown fuse	• This relay turns on if there is at least one output module whose fuse has blown. • This relay remains on even after the system returns to normal. • Output modules on remote I/O stations are also checked.		S (Error)	M9000	QCPU LCPU[*4]
SM61	I/O module verify error	OFF: Normal ON: Error	• This relay turns on if the status of the I/O module differs from that registered at power-on. • This relay remains on even after the system returns to normal. • I/O modules on remote I/O stations are also checked.		S (Error)	M9002	QCPU LCPU
SM62	Annunciator detection	OFF: Not detected ON: Detected	This relay turns on if at least one annunciator (F) turns on.		S (Instruction execution)	M9009	QCPU LCPU
SM80	CHK detection	OFF: Not detected ON: Detected	• This relay turns on if an error is detected by the CHK instruction. • This relay remains on even after the system returns to normal.		S (Instruction execution)	New	Qn(H) QnPH QnPRH
SM84	Error clear	OFF → ON:Error clear	This relay is turned on to clear an error set to SD84 and SD85.		U	New	QnUDV QnUDPV LCPU
SM90	Startup of monitoring timer for step transition (Enabled only when SFC program exists)	OFF: Not started (monitoring timer reset) ON: Started (monitoring timer started)	Corresponds to SD90	• Goes ON when measurement of step transition monitoring timer is commenced. • Resets step transition monitoring timer when it goes OFF.	U	M9108	Qn(H) QnPH QnPRH
SM91			Corresponds to SD91			M9109	
SM92			Corresponds to SD92			M9110	
SM93			Corresponds to SD93			M9111	
SM94			Corresponds to SD94			M9112	
SM95			Corresponds to SD95			M9113	
SM96			Corresponds to SD96			M9114	
SM97			Corresponds to SD97			New	
SM98			Corresponds to SD98			New	
SM99			Corresponds to SD99			New	

Number	Name	Meaning	Explanation	Set by (When Set)	Corresponding ACPU M9□□□	Corresponding CPU
SM100	Serial communication function using flag	OFF: Not to be used ON: To be used	This relay stores whether the serial communication function is set to be used or not in PLC parameter.	S (Power-on or reset)	New	Q00/Q01 QnU*2 LCPU*3
SM101	Communication protocol status flag	OFF: Other than MC protocol communication devices ON: MC protocol communication device	This relay stores whether the communication-target device is an MC protocol communication device or not.	S (Being communicated via RS-232 or RS-422/485)	New	Q00/Q01 QnU*2 LCPU*3
SM110	Protocol error	OFF: Normal ON: Error	• Turns on if a failed protocol was used to make communication in the serial communication function. • This relay remains on even after the protocol returns to normal.	S (Error)	New	Q00/Q01 QnU*2 LCPU*3
SM111	Communication status	OFF: Normal ON: Error	• Turns on if the mode used to make communication was different from the mode set in the serial communication function. • This relay remains on even after the system returns to normal.	S (Error)	New	Q00/Q01 QnU*2 LCPU*3
SM112	Error information clear	ON: Cleared	This relay is turned on to clear error codes stored in SM110, SM111, SD110, and SD111. The error codes are cleared when this relay is turned on.	U	New	Q00/Q01 QnU*2 LCPU*3
SM113	Overrun error	OFF: Normal ON: Error	This relay turns on if an overrun error occurs in communication using the serial communication function.	S (Error)	New	Q00/Q01 QnU*2 LCPU*3
SM114	Parity error	OFF: Normal ON: Error	This relay turns on if a parity error occurs in communication using the serial communication function.	S (Error)	New	Q00/Q01 QnU*2 LCPU*3
SM115	Framing error	OFF: Normal ON: Error	This relay turns on if a flaming error occurs in communication using the serial communication function.	S (Error)	New	Q00/Q01 QnU*2 LCPU*3
SM165	Program memory batch transfer execution status	OFF: Completed ON: Not being executed or Not completed	• This relay turns on when data are written to the program cache memory. • This relay turns off when program memory batch transfer is completed. • This relay remains on when data written to the program cache memory are not batch-transferred to the program memory.	S (Status change)	New	QnU*1 LCPU

*1 The following modules support this area:
- Universal model QCPU whose serial number (first five digits) is "10012" or later
- Q13UDHCPU, Q26UDHCPU

*2 The following modules having an RS-232 connector support these areas:
- Universal model QCPU whose serial number (first five digits) is "13062" or later (For the Q02UCPU, the serial number (first five digits) must be "10102" or later.)
- Q00UJCPU, Q00UCPU, Q01UCPU

*3 The LCPU, except the L02SCPU and L02SCPU-P, whose serial number (first five digits) is "15102" or later

*4 Modules whose serial number (first five digits) is "16112" or later

(2) System information

Number	Name	Meaning	Explanation	Set by (When Set)	Corresponding ACPU M9□□□	Corresponding CPU
SM202	LED OFF command	OFF → ON: LED OFF	When this relay turns on from off, the LED corresponding to each bit in SD202 turns off.	U	New	Qn(H) QnPH QnPRH QnU LCPU
SM203	STOP contact	STOP status	This relay is on when the module is in the STOP status.	S (Status change)	M9042	QCPU LCPU
SM204	PAUSE contact	PAUSE status	This relay is on when the module is in the PAUSE status.	S (Status change)	M9041	QCPU LCPU
SM206	PAUSE enable coil	OFF: PAUSE disabled ON: PAUSE enabled	The status changes to PAUSE if this relay is on when the PAUSE contact turns on.	U	M9040	QCPU LCPU
SM210	Clock data set request	OFF: Ignored ON: Set request	Clock data stored in SD210 to SD213 are written to the CPU module after the END instruction execution in the scan where this relay is turned on.	U	M9025	QCPU LCPU
SM211	Clock data error	OFF: No error ON: Error	This relay turns on if an error occurs in the clock data (SD210 to SD213), and is off while there is no error.	S (Request)	M9026	QCPU LCPU
SM213	Clock data read request	OFF: Ignored ON: Read request	This relay is turned on to read clock data and store them as BCD values into SD210 to SD213.	U	M9028	QCPU LCPU
SM214	Write-protect status for device data (from outside the CPU module)	OFF: Disabled ON: Enabled	This relay turns on when the write-protect function for device data (from outside the CPU module) is enabled.	S (Initial)	New	QnUDV*13 QnUDPV*13
SM220	CPU No.1 preparation completed	OFF: CPU No.1 preparation uncompleted ON: CPU No.1 preparation completed	Turns on when an access to CPU No.1 from another CPU becomes possible after power-on or reset operation. This relay is used as an interlock for accessing CPU No.1 when the multiple CPU synchronous setting is set to asynchronous.	S (Status change)	New	QCPU
SM221	CPU No.2 preparation completed	OFF: CPU No.2 preparation uncompleted ON: CPU No.2 preparation completed	Turns on when an access to CPU No.2 from another CPU becomes possible after power-on or reset operation. This relay is used as an interlock for accessing CPU No.2 when the multiple CPU synchronous setting is set to asynchronous.	S (Status change)	New	QnU*7
SM222	CPU No.3 preparation completed	OFF: CPU No.3 preparation uncompleted ON: CPU No.3 preparation completed	Turns on when an access to CPU No.3 from another CPU becomes possible after power-on or reset operation. This relay is used as an interlock for accessing CPU No.3 when the multiple CPU synchronous setting is set to asynchronous.	S (Status change)	New	QnU*7
SM223	CPU No.4 preparation completed	OFF: CPU No.4 preparation uncompleted ON: CPU No.4 preparation completed	Turns on when an access to CPU No.4 from another CPU becomes possible after power-on or reset operation. This relay is used as an interlock for accessing CPU No.4 when the multiple CPU synchronous setting is set to asynchronous.	S (Status change)	New	QnU*5
SM235	Online module change flag	OFF: Online module change is not in progress ON: Online module change in progress	This relay is on during online module change. (for host CPU)	S (During online module change)	New	QnPH

Number	Name	Meaning	Explanation	Set by (When Set)	Corresponding ACPU M9□□□	Corresponding CPU
SM236	Online module change complete flag	OFF: Online module change incomplete ON: Online module change complete	• This relay is on only for one scan after completion of online module change. • This relay can be used only in the scan execution type program. (for host CPU)	S (When online module change is complete)	New	QnPH
SM237	Device range check inhibit flag	OFF: Device range checked ON: Device range not checked	Selects whether to check a device range during execution of the BMOV, FMOV or DFMOV instruction (only when the conditions for subset processing are established).	U	New	QnU*6 LCPU
SM240	No. 1 CPU reset flag	OFF: No. 1 CPU reset cancel ON: No. 1 CPU resetting	• Turns off when CPU No.1 is reset. • Turns on while CPU No.1 is being reset (including the case where the CPU module is removed from the base unit). The other CPUs are also put in reset status.	S (Status change)	New	Q00/Q01*1 Qn(H)*1 QnPH QnU*7
		Reset status	This relay is always off. (reset status)	S (Status change)	New	LCPU
SM241	No. 2 CPU reset flag	OFF: No. 2 CPU reset cancel ON: No. 2 CPU resetting	• Turns off when CPU No.2 is reset. • Turns on while CPU No.2 is being reset (including the case where the CPU module is removed from the base unit). "MULTI CPU DOWN" (error code: 7000) is detected on the other CPUs.	S (Status change)	New	Q00/Q01*1 Qn(H)*1 QnPH QnU*7
SM242	No. 3 CPU reset flag	OFF: No. 3 CPU reset cancel ON: No. 3 CPU resetting	• Turns off when CPU No.3 is reset. • Turns on while CPU No.3 is being reset (including the case where the CPU module is removed from the base unit). "MULTI CPU DOWN" (error code: 7000) is detected on the other CPUs.	S (Status change)	New	Q00/Q01*1 Qn(H)*1 QnPH QnU*7
SM243	No. 4 CPU reset flag	OFF: No. 4 CPU reset cancel ON: No. 4 CPU resetting	• Turns off when CPU No.4 is reset. • Turns on while CPU No.4 is being reset (including the case where the CPU module is removed from the base unit). "MULTI CPU DOWN" (error code: 7000) is detected on the other CPUs.	S (Status change)	New	Qn(H)*1 QnPH QnU*5
SM244	No. 1 CPU error flag	OFF: No. 1 CPU normal ON: No. 1 CPU during stop error	• This relay is off when CPU No.1 is normal (including the case where a continuation error has occurred). • This relay is on when CPU No.1 has a stop error.	S (Status change)	New	Q00/Q01*1 Qn(H)*1 QnPH QnU*7 LCPU
SM245	No. 2 CPU error flag	OFF: No. 2 CPU normal ON: No. 2 CPU during stop error	• This relay is on when CPU No.2 is normal (including the case where a continuation error has occurred). • This relay is on when CPU No.2 has a stop error.	S (Status change)	New	Q00/Q01*1 Qn(H)*1 QnPH QnU*7
SM246	No. 3 CPU error flag	OFF: No. 3 CPU normal ON: No. 3 CPU during stop error	• This relay is off when CPU No.3 is normal (including the case where a continuation error has occurred). • This relay is on when CPU No.3 has a stop error.	S (Status change)	New	Q00/Q01*1 Qn(H)*1 QnPH QnU*7
SM247	No. 4 CPU error flag	OFF: No. 4 CPU normal ON: No. 4 CPU during stop error	• This relay is off when CPU No.4 is normal (including the case where a continuation error has occurred). • This relay is on when CPU No.4 has a stop error.	S (Status change)	New	Qn(H)*1 QnPH QnU*5
SM250	Max. loaded I/O read	OFF: Ignored ON: Read	When this relay turns on from off, the largest I/O number among those of the mounted modules is read into SD250.	U	New	Qn(H) QnPH QnPRH

Number	Name	Meaning	Explanation	Set by (When Set)	Corresponding ACPU M9□□□	Corresponding CPU
SM254	All stations refresh command	OFF: Refresh arrival station ON: Refresh all stations	• Effective for the batch refresh (also effective for the low speed cyclic) • Designate whether to receive arrival stations only or to receive all device stations in the MELSECNET/H.	U	New	Qn(H) QnPH QnPRH
			• Effective for the batch refresh (also effective for the low speed cyclic) • Designate whether to receive arrival stations only or to receive all device stations in the CC-Link IE Controller Network.			Qn(H)*2 QnPH QnPRH
			• Effective for the batch refresh (also effective for the low speed cyclic) • Specify whether to receive only arrival station or all stations in the MELSECNET/H or CC-Link IE Controller Network.			QnU
SM255	MELSECNET/10, MELSECNET/H module 1 information	OFF: Operative network ON: Standby network	Turns on when it belongs to the standby network. (If no specification has been made, it is set to the operative network.)	S (Initial)	New	Qn(H) QnPH QnPRH
SM256		OFF: Reads ON: Does not read	For refresh from the network module to the CPU module, set whether to read data from the network module to a device (such as B and W) or not.	U		
SM257		OFF: Writes ON: Does not write	For refresh from the CPU module to the network module, set whether to write data in a device (such as B and W) to the network module or not.			
SM260	MELSECNET/10, MELSECNET/H module 2 information	OFF: Operative network ON: Standby network	Turns on when it belongs to the standby network. (If no specification has been made, it is set to the operative network.)	S (Initial)	New	Qn(H) QnPH QnPRH
SM261		OFF: Reads ON: Does not read	For refresh from the network module to the CPU module, set whether to read data from the network module to a device (such as B and W) or not.	U		
SM262		OFF: Writes ON: Does not write	For refresh from the CPU module to the network module, set whether to write data in a device (such as B and W) to the network module or not.			
SM265	MELSECNET/10, MELSECNET/H module 3 information	OFF: Operative network ON: Standby network	Turns on when it belongs to the standby network. (If no specification has been made, it is set to the operative network.)	S (Initial)	New	Qn(H) QnPH QnPRH
SM266		OFF: Reads ON: Does not read	For refresh from the network module to the CPU module, set whether to read data from the network module to a device (such as B and W) or not.	U		
SM267		OFF: Writes ON: Does not write	For refresh from the CPU module to the network module, set whether to write data in a device (such as B and W) to the network module or not.			

Number	Name	Meaning	Explanation	Set by (When Set)	Corresponding ACPU M9□□□	Corresponding CPU
SM270	MELSECNET/10, MELSECNET/H module 4 information	OFF: Operative network ON: Standby network	Turns on when it belongs to the standby network. (If no specification has been made, it is set to the operative network.)	S (Initial)	New	Qn(H) QnPH QnPRH
SM271		OFF: Reads ON: Does not read	For refresh from the network module to the CPU module, set whether to read data from the network module to a device (such as B and W) or not.	U		
SM272		OFF: Writes ON: Does not write	For refresh from the CPU module to the network module, set whether to write data in a device (such as B and W) to the network module or not.			
SM280	CC-Link error	OFF: Normal ON: Error	This relay turns on if a CC-Link error is detected in any of the CC-Link modules mounted, and turns off when the condition returns to normal.	S (Status change)	New	Qn(H) QnPH QnPRH
SM310	Mounting status of RS-232, RS-442/485 adapter	OFF: No adapter mounted ON: RS-232 or RS-422/485 adapter mounted	This relay stores whether the RS-232 or RS-422/485 adapter is mounted or not. The mounting status of the RS-232 or RS-422/485 adapter is checked during the initial processing, and if it is mounted, this relay turns on. The on/off status set during the initial processing is held until the CPU module is powered off and on again or is reset.	S (Initial)	New	LCPU
SM315	Communication reserved time delay enable/disable flag	OFF: Without delay ON: With delay	• This flag is enabled when the time reserved for communication processing is set in SD315. • Turns ON to delay the END processing by the time set in SD315 in order to perform communication processing. (The scan time increases by the period set in SD315.) • Turns OFF to perform the END processing without a delay of the time set in SD315 when there is no communication processing. (Defaults to OFF)	U	New	Q00J/Q00/Q01
SM319	Automatic CC-Link start	OFF: Not activated ON: Activated	• This relay indicates whether the CC-Link module is started and all the data are refreshed by the automatic CC-Link start function. • This relay is on when all the data are refreshed by the automatic CC-Link start function. • Then the automatic CC-Link start function is not activated, or when the refresh device range is insufficient, this relay is turned off. (If the refresh device range set for the automatic CC-Link start function is insufficient, all of the refresh is stopped.)	S (Initial processing and status change)	New	LCPU
SM320	Presence/absence of SFC program	OFF: SFC program absent ON: SFC program present	• This relay is on if an SFC program is registered. • This relay turns off if no SFC program is registered.	S (Initial)	M9100	Q00J/Q00/Q01*1 Qn(H) QnPH QnPRH QnU LCPU

Number	Name	Meaning	Explanation	Set by (When Set)	Corresponding ACPU M9□□□	Corresponding CPU
SM321	Start/stop SFC program	OFF: SFC program not executed (stop) ON: SFC program executed (start)	• The same value as in SM320 is set as the initial value. (This relay turns on when an SFC program is registered.) • Turning off this relay stops SFC program execution. • Turning on this relay restarts SFC program execution.	S (Initial)/U	M9101 format change	Q00J/Q00/Q01*1 Qn(H) QnPH QnPRH QnU LCPU
SM322	SFC program start status	OFF: Initial start ON: Resume start	In the SFC tab of "PLC Parameter", "Initial start" is set for "SFC program start mode". • At initial start:OFF • At resume start:ON	S (Initial)/U	M9102 format change	Q00J/Q00/Q01*1 Qn(H) QnPH QnPRH QnU LCPU
SM323	Presence/absence of continuous transition for entire block	OFF: Continuous transition not effective ON: Continuous transition effective	Set the presence/absence of continuous transition for the block where "Continuous transition bit" of the SFC data device has not been set.	U	M9103	Q00J/Q00/Q01*1 Qn(H) QnPH QnPRH QnU LCPU
SM324	Continuous transition prevention flag	OFF: When transition is executed ON: When no transition	• This relay is off while the module is in the continuous transition mode or during continuous transition, and is on when continuous transition is not executed. • This relay is always on while the CPU module is operating not in the continuous transition mode.	S (Instruction execution)	M9104	Q00J/Q00/Q01*1 Qn(H) QnPH QnPRH QnU LCPU
				S (Status change)	New	Q00J/Q00/Q01*1 Qn(H) QnPH QnPRH QnU
SM325	Output mode at block stop	OFF: OFF ON: Preserves	Select whether the coil outputs of the active steps are held or not at the time of a block stop. • The initial value is set to off when the output mode at a block stop is off in the parameter setting, and it is set to on when the coil outputs are set to be held. • When this relay is turned off, all coil outputs are turned off. • When this relay is turned on, the coil output state is held.	S (Initial)/U	M9196	Q00J/Q00/Q01*1 Qn(H) QnPH QnPRH QnU LCPU
SM326	SFC device clear mode	OFF: Clear device ON: Preserves device	Select the device status at the time of switching from STOP to program write, and then to RUN. (All devices except the step relay)	U	New	Q00J/Q00/Q01*1 Qn(H) QnPH QnPRH QnU LCPU
SM327	Output during end step execution	OFF: Hold step output turned OFF (cleared) ON: Hold step output held	If this relay is off, the coil output turns off when the step held after transition (SC, SE, or ST) reaches the end step.	S (Initial)/U	New	Qn(H) QnPH QnPRH QnU LCPU
				U		Q00J/Q00/Q01*1

Number	Name	Meaning	Explanation	Set by (When Set)	Corresponding ACPU M9□□□	Corresponding CPU
SM328	Clear processing mode when end step is reached	OFF: Clear processing is performed. ON: Clear processing is not performed.	Select whether clear processing will be performed or not if active steps other than the ones being held exist in the block when the end step is reached. • When this relay turns OFF, all active steps are forcibly terminated to terminate the block. • When this relay is ON, the execution of the block is continued as-is. • If active steps other than the ones being held do not exist when the end step is reached, the steps being held are terminated to terminate the block.	U	New	Q00J/Q00/Q01*1 QnU LCPU
SM329	Online change (inactive block) status flag	OFF: Not executed ON: Being executed	This relay is on while online change (inactive block) is executed.	S (Status change)	New	QnU*8 L06/L26/L26CPU -BT*12
SM330	Operation mode for low speed execution type program	OFF: Asynchronous mode ON: Synchronous mode	Select whether the low speed execution type program will be executed in the asynchronous mode or in the synchronous mode. • Asynchronous mode (this relay is turned off.) The operation of the low-speed execution type program is performed continuously within an excess time. • Synchronous mode (this relay is turned on.) The operation of the low-speed execution type program is not performed continuously, but performed from the next scan, even if there is excess time.	U	New	Qn(H) QnPH
SM331	Normal SFC program execution status	OFF: Not executed ON: Being executed	• This relay stores the information on whether the normal SFC program is in execution or not. • Used as an interlock for execution of the SFC control instruction.	S (Status change)	New	Qn(H)*3 QnPH*4 QnPRH
SM332	Program execution management SFC program execution status	OFF: Not executed ON: Being executed	• This relay stores the information on whether the SFC program for program execution management is in execution or not. • Used as an interlock for execution of the SFC control instruction.	S (Status change)	New	Qn(H)*3 QnPH*4 QnPRH
SM339	Latch clear execution command	OFF → ON:Latch clear executed Except OFF → ON: Latch clear not executed	The latch data is cleared while this relay is turned on in the STOP status. When $5A01_H$ is set to SD339, this relay will be valid.	U	New	QnUDV*10 QnUDPV*11 LCPU*9
SM386	Operation history information loss flag	OFF: No information loss ON: Information loss occurred	• This relay turns on when the operation history information loss has been occurred. • This relay turns off after clearing the operation history.	S (Status change)	New	QnUDV*13 QnUDPV*13
SM390	Access execution flag	ON indicates completion of intelligent function module access	• This relay stores the status information on the intelligent function module access instruction that was just executed. (This data is overwritten if the intelligent function module access instruction is executed again.) • Used by the user in a program as a completion bit.	S (Status change)	New	Qn(H) QnPH QnPRH
SM391	GINT instruction execution completion flag	OFF: Not executed ON: Execution completed	Stores the execution status of the S(P).GINT instruction. • Turns off before execution of the instruction. • Turns on after completion of the instruction.	S (Instruction execution)	New	Q00/Q01 Qn(H)*1 QnPH QnU*7

*1 Modules whose function version B or later
*2 Modules whose serial number (first five digits) is "09012" or later
*3 Modules whose serial number (first five digits) is "04122" or later
*4 Modules whose serial number (first five digits) is "07032" or later
*5 Universal model QCPU except the Q00UJCPU, Q00UCPU, Q01UCPU, and Q02UCPU
*6 The following modules support this area:
- Universal model QCPU whose serial number (first five digits) is "10012" or later
- Q13UDHCPU, Q26UDHCPU

*7 Universal model QCPU except the Q00UJCPU
*8 Modules whose serial number (first five digits) is "12052" or later
*9 Modules whose serial number (first five digits) is "15042" or later
*10 Modules whose serial number (first five digits) is "15043" or later
*11 Modules whose serial number (first five digits) is "15072" or later
*12 Modules whose serial number (first five digits) is "15102" or later
*13 Modules whose serial number (first five digits) is "19062" or later

(3) System clock/counter

Number	Name	Meaning	Explanation	Set by (When Set)	Corresponding ACPU M9□□□	Corresponding CPU
SM400	Always ON	ON OFF	This relay is always on.	S (Every END processing)	M9036	QCPU LCPU
SM401	Always OFF	ON OFF	This relay is always off.	S (Every END processing)	M9037	QCPU LCPU
SM402	After RUN, ON for 1 scan only	ON OFF 1 scan	• This relay turns on for one scan after the CPU module enters the RUN status. • This relay can be used only in a scan execution type program. • When an initial execution type program is used, this relay turns off at the END processing of the scan execution type program in the first scan after the CPU module enters the RUN status. 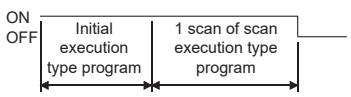	S (Every END processing)	M9038	Qn(H) QnPH QnPRH QnU LCPU
			This relay turns on for one scan after the CPU module enters the RUN status.		New	Q00J/Q00/Q01
SM403	After RUN, OFF for 1 scan only	ON OFF 1 scan	• This relay turns off for one scan after the CPU module enters the RUN status. • This relay can be used only in a scan execution type program. • When an initial execution type program is used, this relay turns on at the END processing of the scan execution type program in the first scan after the CPU module enters the RUN status. 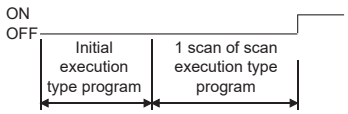	S (Every END processing)	M9039	Qn(H) QnPH QnPRH QnU LCPU
			This relay turns off for one scan after the CPU module enters the RUN status.		New	Q00J/Q00/Q01
SM404	Low speed execution type program ON for 1 scan only after RUN	ON OFF 1 scan	• This relay turns on for one scan after the CPU module enters the RUN status. • This relay can be used only in a low-speed execution type program.	S (Every END processing)	New	Qn(H) QnPH

Number	Name	Meaning	Explanation	Set by (When Set)	Corresponding ACPU M9□□□	Corresponding CPU
SM405	Low speed execution type program OFF for 1 scan only after RUN	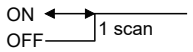	• This relay turns off for one scan after the CPU module enters the RUN status. • This relay can be used only in a low-speed execution type program.	S (Every END processing)	New	Qn(H) QnPH
SM409	0.01 second clock	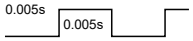	• This relay repeatedly turns on and off at 5-ms interval. • This relay does not turn on/off per scan, but turns on/off whenever the specified time interval is reached. • The initial state when the CPU module is powered on or reset is off.	S (Status change)	New	Qn(H) QnPH QnPRH QnU LCPU
SM410	0.1 second clock	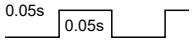	• This relay repeatedly turns on and off at the specified interval. • This relay does not turn on/off per scan, but turns on/off whenever the specified time interval is reached. • The initial state when the CPU module is powered on or reset is off.	S (Status change)	M9030	QCPU LCPU
SM411	0.2 second clock	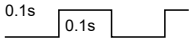			M9031	
SM412	1 second clock	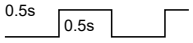	• This relay repeatedly turns on and off at the specified interval. • This relay does not turn on/off per scan, but turns on/off whenever the specified time interval is reached. • The initial state when the CPU module is powered on or reset is off.	S (Status change)	M9032	QCPU LCPU
SM413	2 second clock	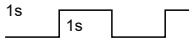			M9033	
SM414	2n second clock	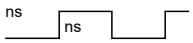	• This relay repeatedly turns on and off at the interval specified in SD414 (unit: second). (If the value of SD414 is changed, the time that has passed after the previous ON/OFF interval of SM414 is counted as the next interval, and the ON/OFF status is changed at the next interval that is newly specified.) Example: When the value of SD414 is changed from 3 to 10. 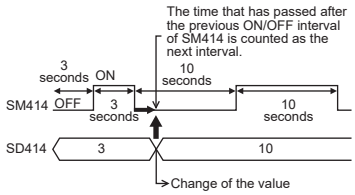 • This relay does not turn on/off per scan, but turns on/off whenever the specified time interval is reached. • The initial state when the CPU module is powered on or reset is off.	S (Status change)	M9034 format change	QCPU LCPU
SM415	2n (ms) clock		• This relay repeatedly turns on and off at the interval specified in SD415 (unit: ms). (If the value of SD415 is changed, the time that has passed after the previous ON/OFF interval of SM415 is counted as the next interval, and the ON/OFF status is changed at the next interval that is newly specified. SM415 operates in the same way as SM414.) • This relay does not turn on/off per scan, but turns on/off whenever the specified time interval is reached. • The initial state when the CPU module is powered on or reset is off.5	S (Status change)	New	Qn(H) QnPH QnPRH QnU LCPU

Number	Name	Meaning	Explanation	Set by (When Set)	Corresponding ACPU M9□□□	Corresponding CPU
SM420	User timing clock No.0	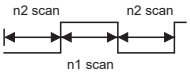	• This relay repeatedly turns on and off at the specified scan intervals. • This relay starts with off at power-on or reset of the CPU module. (For the redundant CPU, however, this relay will become always off after system switching.) • The on/off scan intervals are set by the DUTY instruction. 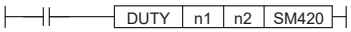 n1: On scan interval n2: Off scan interval	S (Every END processing)	M9020	QCPU LCPU
SM421	User timing clock No.1				M9021	
SM422	User timing clock No.2				M9022	
SM423	User timing clock No.3				M9023	
SM424	User timing clock No.4				M9024	
SM430	User timing clock No.5		For use with SM420 to SM424 low speed programs		New	Qn(H) QnPH
SM431	User timing clock No.6					
SM432	User timing clock No.7					
SM433	User timing clock No.8					
SM434	User timing clock No.9					

(4) Scan information

Number	Name	Meaning	Explanation	Set by (When Set)	Corresponding ACPU M9□□□	Corresponding CPU
SM510	Low speed program execution flag	OFF: Completed or not executed ON: Being executed	This relay is on while a low-speed execution type program is being executed.	S (Every END processing)	New	Qn(H) QnPH
SM551	Reads module service interval	OFF: Ignored ON: Read	When this relay is turned on, the service interval of the module specified by SD550 is read to SD551 and SD552.	U	New	Qn(H) QnPH QnPRH

(5) I/O refresh

Number	Name	Meaning	Explanation	Set by (When Set)	Corresponding ACPU M9□□□	Corresponding CPU
SM580	Program to program I/O refresh	OFF: Not refreshed ON: Refreshed	When this relay is turned on, I/O refresh is performed after execution of the first program, and then the next program is executed. When a sequence program and a SFC program are to be executed, the sequence program is executed, I/O refresh is performed, and then the SFC program is executed.	U	New	Q00J/Q00/Q01*1

*1 Modules whose function version B or later

(6) Drive information

Number	Name	Meaning	Explanation	Set by (When Set)	Corresponding ACPU M9□□□	Corresponding CPU
SM600	Memory card usable flags	OFF: Unusable ON: Usable	This relay turns on when the memory card becomes ready for use.	S (Status change)	New	Qn(H) QnPH QnPRH QnU*1 (except the QnUDV and QnUDPV)
			This relay turns on when the SD memory card becomes ready for use. (This relay turns on when a compatible SD memory card is inserted and set to be enabled.)			QnUDV QnUDPV LCPU
SM601	Memory card protect flag	OFF: Not protected ON: Protected	This relay is on while the write-protect switch of the memory card or SD memory card is on.	S (Status change)	New	Qn(H) QnPH QnPRH QnU*1 LCPU
SM602	Drive 1 flag	OFF: No drive 1 ON: Drive 1 present	This relay is on while a RAM is being inserted. This relay is always off when the QnUDVCPU or QnUDPVCPU is used.	S (Status change)	New	Qn(H) QnPH QnPRH QnU*1
SM603	Drive 2 flag	OFF: No drive 2 ON: Drive 2 present	This relay is on while a ROM is being inserted.	S (Status change)	New	Qn(H) QnPH QnPRH QnU*1 (except the QnUDV and QnUDPV)
			This relay is on while a SD memory card is being inserted. (This relay is on while a SD memory card is being inserted, regardless of the availability and the type of the card.)			QnUDV QnUDPV LCPU
SM604	Memory card in-use flag	OFF: Not used ON: In use	This relay is on while a memory card or SD memory card is being used.	S (Status change)	New	Qn(H) QnPH QnPRH QnU*1 LCPU
SM605	Memory card remove/insert prohibit flag	OFF: Remove/insert enabled ON: Remove/insert prohibited	This relay is turned on to disable the insertion and removal of a memory card.	U	New	Qn(H) QnPH QnPRH QnU*1 (except the QnUDV and QnUDPV)
			• This relay is turned on to disable the insertion and removal of an SD memory card. • When this relay is turned on, the system turns on SM607 (SD memory card forced disable status flag), and then turns off this relay.	U/S		QnUDV QnUDPV
			This relay is turned on to disable the insertion and removal of a memory card. (This relay turns on when a compatible SD memory card is inserted and set to be enabled with the SD memory card lock switch. This relay does not turn on while "ICM.OPE.ERROR" occurs.)	S (Status change)		LCPU

Number	Name	Meaning	Explanation	Set by (When Set)	Corresponding ACPU M9□□□	Corresponding CPU
SM606	SD memory card forced disable instruction	OFF: SD memory card forced disable cancel instruction ON: SD memory card forced disable instruction	• This relay is turned on to execute the SD memory card forced disable instruction. When there are any functions accessing to an SD memory card, the process of disablement is held until it is completed. • This relay is turned off to cancel the SD memory card forced disable instruction.	U	New	QnUDV QnUDPV LCPU
SM607	SD memory card forced disable status flag	OFF: Not being disabled by the SD memory card forced disable instruction ON: Being disabled by the SD memory card forced disable instruction	• This relay turns on when an SD memory card is disabled by turning on SM606 (SD memory card forced disable instruction). • This relay turns off when the forced disable status of SD memory card is canceled by turning off SM606 (SD memory card forced disable instruction).	S (Status change)	New	QnUDV QnUDPV LCPU
SM609	Memory card remove/insert enable flag	OFF: Remove/insert prohibited ON: Remove/insert enabled	• This relay is turned on to enable the insertion and removal of a memory card. • Turned OFF by the system after the memory card is removed. • This relay can be used while both SM604 and SM605 are off.	S/U	New	Qn(H) QnPH QnPRH QnU*1
SM620	Drives 3 and 4 usable flags	OFF: Unusable ON: Usable	This relay is always on.	S (Initial)	New	QCPU LCPU
SM621	Drives 3 and 4 protection flag	OFF: Not protected ON: Protected	This relay is always off.	S (Initial)	New	QCPU LCPU
SM622	Drive 3 flag	OFF: No drive 3 ON: Drive 3 present	This relay is always on.	S (Initial)	New	Q00J/Q00/Q01 Qn(H) QnPH QnPRH QnU*2 LCPU
SM623	Drive 4 flag	OFF: No drive 4 ON: Drive 4 present	This relay is always on.	S (Initial)	New	QCPU LCPU
SM624	Drive 3/4 in-use flag	OFF: Not used ON: In use	This relay is on while a file stored in the drive 3 (standard RAM) or the drive 4 (standard ROM) is being used.	S (Status change)	New	Qn(H) QnPH QnPRH QnU LCPU
SM626	Extended SRAM cassette insertion flag	OFF: Not inserted ON: Inserted	This relay is on while an extended SRAM cassette is inserted.	S (Status change)	New	QnUDV QnUDPV
SM634	Project data batch save completion flag	OFF: Not completed ON: Completed	This relay turns on upon completion of the batch save processing.	S (Status change)	New	LCPU*4
SM636	Project data batch load completion flag	OFF: Not completed ON: Completed	This relay turns on upon completion of the batch load processing.	S (Status change)	New	LCPU*4
SM638	Directory batch delete flag	ON: Batch delete being executed OFF: Batch delete not executed	This relay is on while the directory batch delete processing is being executed, and turns off when the processing ends.	S (Writing)	New	QnUDV QnUDPV
SM640	File register use	OFF: File register not used ON: File register in use	This relay is on while a file register is being used.	S (Status change)	New	Q00J/Q00/Q01 Qn(H) QnPH QnPRH QnU*2 LCPU
SM650	Comment use	OFF: File register not used ON: File register in use	This relay is on while a comment file is being used.	S (Status change)	New	Qn(H) QnPH QnPRH QnU LCPU

Number	Name	Meaning	Explanation	Set by (When Set)	Corresponding ACPU M9□□□	Corresponding CPU
SM660	Boot operation	OFF: Internal memory execution ON: Boot operation in progress	• This relay is on during boot operation. • This relay turns off when the boot specification switch is turned off.	S (Status change)	New	Qn(H) QnPH QnPRH
		OFF: Program memory execution ON: Boot operation in progress	This relay is on during boot operation.			Q00J/Q00/Q01 QnU*3 LCPU
SM671	Latch data backup to standard ROM completion flag	OFF: Not completed ON: Completed	• This relay turns on when latch data backup to the standard ROM is completed. • Time when the backup is completed is stored in SD672 or later.	S (Status change)	New	QnU LCPU
SM672	Memory card file register access range flag	OFF: Within access range ON: Outside access range	• This relay turns on when an area outside a file register range in a memory card is accessed. (This relay is set at END processing.) • This relay is reset from a program.	S/U	New	Qn(H) QnPH QnPRH
SM675	Error completion of latch data backup to standard ROM	OFF: No error ON: Error	• This relay turns on if latch data backup to the standard ROM is not completed. • This relay turns off when the backup is completed.	S	New	QnU LCPU
SM676	Specification of restoration repeated execution	OFF: Not specified ON: Specified	• When latch data are backed up while this relay is on, the backup data will be restored at every power-on of the CPU module. • The backup data will be restored at every power-on until the latch data are deleted or the latch data are backed up again.	U	New	QnU LCPU
SM680	Program memory write error	ON: Write error OFF: Write not executed/normal	This relay turns on if a write error is detected during writing to the program memory (flash ROM). This relay turns off when a write command is given.	S (At write)	New	QnU LCPU
SM681	Program memory writing flag	ON: During writing OFF: Write not executed	This relay is on during writing to the program memory (flash ROM) and turns off when the writing is completed.	S (At write)	New	QnU LCPU
SM682	Program memory overwrite count error flag	ON: Overwrite count is 100,000 or more OFF: Overwrite count is less than 100,000	This relay turns on when overwrite count of the program memory (flash ROM) reaches to 100,000. (It is necessary to change CPU module.)	S (At write)	New	QnU LCPU
SM685	Standard ROM write error	ON: Write error OFF: Write not executed/normal	This relay turns on if a write error is detected during writing to the standard ROM (flash ROM). This relay turns off when a write command is given.	S (At write)	New	QnU LCPU
SM686	Standard ROM writing flag	ON: During overwriting OFF: Overwrite not executed	This relay is on during writing to the standard ROM (flash ROM) and turns off when the writing is completed.	S (At write)	New	QnU LCPU
SM687	Standard ROM overwrite count error flag	ON: Overwrite count is 100,000 or more OFF: Overwrite count is less than 100,000	This relay turns on when overwrite count of the standard ROM (flash ROM) reaches to 100,000. (The CPU module requires to be replaced.)	S (At write)	New	QnU LCPU
SM691	Backup start preparation status flag	OFF: Backup start preparation not completed ON: Backup start preparation completed	Turns on when the backup preparation is completed.	S (Status change)	New	QnU*1 LCPU
SM692	Restoration complete flag	OFF: Restoration not completed ON: Restoration completed	This relay turns on when restoration of backup data in a memory card or SD memory card is completed.	S (Status change)	New	QnU*1 LCPU

*1 Modules whose serial number (first five digits) is "10102" or later (except the Q00UJCPU, Q00UCPU, and Q01UCPU)
*2 Universal model QCPU except the Q00UJCPU
*3 Universal model QCPU except the Q00UJCPU, Q00UCPU, and Q01UCPU
*4 Modules whose serial number (first five digits) is "14042" or later

(7) Instruction-related relay

Number	Name	Meaning	Explanation	Set by (When Set)	Corresponding ACPU M9□□□	Corresponding CPU
SM700	Carry flag	OFF: Carry OFF ON: Carry ON	Carry flag used in application instruction	S (Instruction execution)	M9012	QCPU LCPU
SM701	Number of output characters selection	OFF: Output until NULL code encountered ON: 16 characters output	Used for the PR, PRC, BINDA, DBINDA, BINHA, DBINHA, BCDDA, DBCDDA, or COMRD instruction	U	M9049	Qn(H) QnPH QnPRH QnU LCPU
SM702	Search method	OFF: Search next ON: 2-part search	• Designates method to be used by search instruction. • Data must be arranged for 2-part search.	U	New	QCPU LCPU
SM703	Sort order	OFF: Ascending order ON: Descending order	The sort instruction is used to designate whether data should be sorted in ascending order or in descending order.	U	New	QCPU LCPU
SM704	Block comparison	OFF: Mismatch found ON: All match	This relay turns on when all data conditions are met for the BKCMP instruction.	S (Instruction execution)	New	QCPU LCPU
			This relay turns on when all data conditions are met for the DBKCMP instruction.			QnU*2 LCPU
SM709	DT/TM instruction improper data detection flag	OFF: Improper data not detected ON: Improper data detected	This relay turns on when the data to be compared by the DT or TM instruction cannot be recognized as date or time data, when the device (three words) to be compared is exceeding the specified device range.	S (Instruction execution)/U	New	QnU*2 LCPU
SM710	CHK instruction priority ranking flag	OFF: Conditions priority ON: Pattern priority	• Remains as originally set when OFF. • Priority for the CHK instruction is changed when on.	S (Instruction execution)	New	Qn(H) QnPH QnPRH
SM715	EI flag	OFF: During DI ON: During EI	This relay is on while the EI instruction is being executed.	S (Instruction execution)	New	QCPU LCPU
SM716	Block comparison (Except an interrupt program)	OFF: Mismatch found ON: No mismatch	This relay turns on when all data conditions are met for the DBKCMP instruction. (Initial execution type program and scan execution type program or standby type program executed from initial execution type program or scan execution type program)	S (Instruction execution)	New	QnU*2 LCPU
SM717	Block comparison (Interrupt program)	OFF: Mismatch found ON: No mismatch	This relay turns on when all data conditions are met for the DBKCMP instruction. (Interrupt program, fixed scan execution type program, or standby type program executed from interrupt program or fixed scan execution type program)	S (Instruction execution)	New	QnU*2 LCPU
SM718	Block comparison (Interrupt program (I45))	OFF: Mismatch found ON: No mismatch	This relay turns on when all data conditions are met for the DBKCMP instruction. (Interrupt program (I45) or standby type program that was executed from interrupt program (I45))	S (Instruction execution)	New	QnU*3
SM719	SMOV instruction BCD conversion prohibit flag	OFF: BCD conversion enabled ON: BCD conversion disabled	This relay switches to on when disabling conversion from BIN data to BCD data with the SMOV instruction.	U	New	QnUDV*16 QnUDPV*16 LCPU*15

Number	Name	Meaning	Explanation	Set by (When Set)	Corresponding ACPU M9□□□	Corresponding CPU
SM720	Comment read completion flag	OFF: Comment read not completed ON: Comment read completed	This relay turns on only during first scan after the processing of the COMRD or PRC instruction is completed.	S (Status change)	New	Qn(H) QnPH
			This relay turns on only during first scan after the processing of the COMRD instruction is completed.			QnPRH QnU LCPU
SM721	File being accessed	OFF: File not accessed ON: File being accessed	This relay is on while a file is being accessed by the SP.FWRITE, SP.FREAD, COMRD, PRC, or LEDC instruction.	S (Status change)	New	Qn(H) QnPH
			This relay is on while a file is being accessed by the SP.FWRITE, SP.FREAD, COMRD, or LEDC instruction.			Qn(H) QnPH QnPRH
			This relay is on while a file is being accessed by the SP.FWRITE, SP.FREAD, COMRD, or SP.DEVST instruction.			QnU
			• This relay is on while a file is being accessed by the SP.FWRITE, SP.FREAD, COMRD, or SP.DEVST instruction. • This relay is on while the standard ROM is being accessed. • This relay is on while the S(P).SFCSCOMR or S(P).SFCTCOMR instruction is being executed.			QnUDV QnUDPV
			• This relay is on while a file is being accessed by the SP.FWRITE, SP.FREAD, COMRD, or SP.DEVST instruction. • This relay is on while a SD memory card or the standard ROM is being accessed. • This relay is on while the S(P).SFCSCOMR or S(P).SFCTCOMR instruction is being executed.			LCPU
			This relay is on while an ATA card or the standard ROM is being accessed.			QnU[*4]
			This relay is on while the S(P).SFCSCOMR or S(P).SFCTCOMR instruction is being executed.			QnU[*11]
			This relay is on while the SP.FTPPUT or SP.FTPGET instruction is being executed.			LCPU[*17]
SM722	BIN/DBIN instruction error disabling flag	OFF: Error detection performed ON: Error detection not performed	Turned ON when "OPERATION ERROR" is suppressed for BIN or DBIN instruction.	U	New	QCPU LCPU
SM734	XCALL instruction execution condition designation	OFF: Not executed by execution condition risen ON: Executed by execution condition risen	• During OFF, XCALL instructions will not be executed even if execution condition is risen. • During ON, XCALL instructions will be executed when execution condition is risen.	U	New	Qn(H)[*4]
SM735	SFC comment readout instruction in execution flag	OFF: Instruction not executed ON: Instruction being executed	This relay turns on while a SFC step comment readout instruction (S(P).SFCSCOMR) or SFC transmission condition comment readout instruction (S(P).SFCTCOMR) is being executed.	S (Instruction execution/Every END processing)	New	Qn(H)[*5] QnPH[*6] QnPRH[*6] QnU[*11] L06/L26/L26CPU -BT[*14]

Number	Name	Meaning	Explanation	Set by (When Set)	Corresponding ACPU M9□□□	Corresponding CPU
SM738	MSG instruction reception flag	OFF: Instruction not executed ON: Instruction executed	This relay turns on when the MSG instruction is executed.	S (Instruction execution)	New	Qn(H) QnPRH
SM739	Refresh device write/read instruction in execution flag	OFF: Instruction not executed ON: Instruction being executed	This relay is on while a refresh device writing/reading instruction (S(P).REFDVWRB, S(P).REFDVWRW, S(P).REFDVRDB, or S(P).REFDVRDW) is being executed. This relay turns off when the instruction is completed at END processing.	S (Instruction execution/Every END processing)	New	QnU*13 LCPU*12
SM740	Display unit availability flag	OFF: Unusable ON: Usable	This relay is on while the display unit can be used.	S (Initial/Status change)	New	LCPU
SM750	Scaling instruction search method setting	OFF: Search next ON: 2-part search	Specify a search method for the scaling instruction.	U	New	QnU*2 LCPU
SM772	Bit conversion mode for the CCD and CRC instructions	OFF: 16-bit conversion mode ON: 8-bit conversion mode	Specify the bit conversion mode for the CCD and CRC instructions. Turn off to specify 16-bit conversion mode and turn on to specify 8-bit conversion mode.	U	New	QnUDV*17 QnUDPV*17 LCPU*17
SM774	PID bumpless processing (for complete derivative)	OFF: Matched ON: Not matched	Specify whether to match the set value (SV) with the process value (PV) or not in manual mode.	U	New	Q00J/Q00/Q01*1 Qn(H) QnPRH QnU LCPU
SM775	Selection of refresh processing during COM/CCOM instruction execution	OFF: Performs link refresh ON: Performs no link refresh	Select whether link refresh processing will be performed or not when only communication with the CPU module is made at the execution of the COM instruction.	U	New	Q00J/Q00/Q01 Qn(H) QnPH
		OFF: Performs refresh processes other than an I/O refresh ON: Performs refresh set by SD778	Select whether to perform refresh processes other than an I/O refresh set by SD778 when the COM or CCOM instruction is executed.			Q00J/Q00/Q01*1 Qn(H)*7 QnPH*4 QnPRH QnU LCPU
SM776	Enable/disable local device at CALL	OFF: Local device disabled ON: Local device enabled	Set whether the local device of the subroutine program called at execution of the CALL instruction is valid or invalid.	U	New	Qn(H) QnPH QnPRH QnU*10 LCPU
SM777	Enable/disable local device in interrupt program	OFF: Local device disabled ON: Local device enabled	Set whether the local device at execution of the interrupt program is valid or invalid.	U	New	Qn(H) QnPH QnPRH QnU*10 LCPU
SM794	PID bumpless processing(for incomplete derivative)	OFF: Matched ON: Not matched	Specify whether to match the set value (SV) with the process value (PV) or not in manual mode.	U	New	Q00J/Q00/Q01*1 Qn(H)*8 QnPRH QnU LCPU
SM796	Block information using the multiple CPU high-speed transmission dedicated instruction (for CPU No.1)	OFF: Block is secured ON: Block set by SD796 cannot be secured	This relay turns on when the number of the remaining blocks in the dedicated instruction transmission area used for the multiple CPU high-speed transmission dedicated instruction (target CPU= CPU No.1) is less than the number of blocks specified in SD796. This relay is on when an instruction is executed, and is off while an END processing is being executed or when free space is available in the area.	S (Instruction execution/Every END processing)	New	QnU*9

Number	Name	Meaning	Explanation	Set by (When Set)	Corresponding ACPU M9□□□	Corresponding CPU
SM797	Block information using the multiple CPU high-speed transmission dedicated instruction (for CPU No.2)	OFF: Block is secured ON: Block set by SD797 cannot be secured	This relay turns on when the number of the remaining blocks in the dedicated instruction transmission area used for the multiple CPU high-speed transmission dedicated instruction (target CPU= CPU No.2) is less than the number of blocks specified in SD797. This relay is on when an instruction is executed, and is off while an END processing is being executed or when free space is available in the area.	S (Instruction execution/Every END processing)	New	QnU*9
SM798	Block information using the multiple CPU high-speed transmission dedicated instruction (for CPU No.3)	OFF: Block is secured ON: Block set by SD798 cannot be secured	This relay turns on when the number of the remaining blocks in the dedicated instruction transmission area used for the multiple CPU high-speed transmission dedicated instruction (target CPU= CPU No.3) is less than the number of blocks specified in SD798. This relay is on when an instruction is executed, and is off while an END processing is being executed or when free space is available in the area.	S (Instruction execution/Every END processing)	New	QnU*9
SM799	Block information using the multiple CPU high-speed transmission dedicated instruction (for CPU No.4)	OFF: Block is secured ON: Block set by SD799 cannot be secured	This relay turns on when the number of the remaining blocks in the dedicated instruction transmission area used for the multiple CPU high-speed transmission dedicated instruction (target CPU= CPU No.) is less than the number of blocks specified in SD799. This relay is on when an instruction is executed, and is off while an END processing is being executed or when free space is available in the area.	S (Instruction execution/Every END processing)	New	QnU*9

*1 Modules whose function version B or later

*2 The following modules support these areas:
- Universal model QCPU whose serial number (first five digits) is "10102" or later
- Q00UJCPU, Q00UCPU, Q01UCPU

*3 The following modules support this area:
- Universal model QCPU whose serial number (first five digits) is "10102" or later
- Q00UCPU, Q01UCPU

*4 Modules whose serial number (first five digits) is "07032" or later

*5 Modules whose serial number (first five digits) is "06082" or later

*6 Modules whose serial number (first five digits) is "07012" or later

*7 Modules whose serial number (first five digits) is "04012" or later

*8 Modules whose serial number (first five digits) is "05032" or later

*9 Universal model QCPU except the Q00UJCPU, Q00UCPU, Q01UCPU, and Q02UCPU

*10 Universal model QCPU except the Q00UJCPU

*11 Modules whose serial number (first five digits) is "12052" or later

*12 Modules whose serial number (first five digits) is "14072" or later

*13 Following modules except the Q00UJCPU, Q00UCPU, Q01UCPU, and Q02UCPU.
- Modules whose serial number (first five digits) is "14072" or later other than the High-speed Universal model QCPU and Universal model Process CPU
- High-speed Universal model QCPU and Universal model Process CPU whose serial number (first five digits) is "16043" or later

*14 Modules whose serial number (first five digits) is "15102" or later

*15 Modules whose serial number (first five digits) is "16042" or later

*16 Modules whose serial number (first five digits) is "16043" or later

*17 Modules whose serial number (first five digits) is "16112" or later

(8) Debugging

Number	Name	Meaning	Explanation	Set by (When Set)	Corresponding ACPU M9□□□	Corresponding CPU
SM800	Trace preparation	OFF: Not ready ON: Ready	Turns on when the trace preparation is completed.	S (Status change)	New	Qn(H) QnPH QnPRH QnU*1 LCPU
SM801	Trace start	OFF: Suspend ON: Start	• When this relay is turned on while the CPU module is set to RUN, a trace will be started. • When this relay is turned off, a trace is stopped. (The related special relays will all turn off)	S (Status change)/U	M9047	Qn(H) QnPH QnPRH QnU*1 LCPU
SM802	Trace execution in progress	OFF: Suspend ON: Start	This relay is on while a trace is being executed.	S (Status change)	M9046	Qn(H) QnPH QnPRH QnU*1 LCPU
SM803	Trace trigger	OFF → ON:Triggered	• This relay turns on when the specified trigger condition is met. • This relay is turned on to meet the trigger condition.	S (Status change)/U	New	Qn(H) QnPH QnPRH QnU*1 LCPU
SM804	After trace trigger	OFF: Not after trigger ON: After trigger	Turns on after trace is triggered.	S (Status change)	New	Qn(H) QnPH QnPRH QnU*1 LCPU
SM805	Trace completed	OFF: Not completed ON: Completed	This relay turns on when a trace is completed.	S (Status change)	M9043	Qn(H) QnPH QnPRH QnU*1 LCPU
SM826	Trace error	OFF: Normal ON: Errors	This relay turns on if an error occurs during trace.	S (Status change)	New	Qn(H) QnPH QnPRH QnU*1 LCPU
SM829	Forced registration specification of trace setting	ON: Forced registration enabled OFF: Forced registration disabled	When this relay is turned on and a sampling trace setting is registered using a programming tool, the sampling trace setting can be registered with the CPU module even when the trigger condition has been met.	U	New	QnU*1 LCPU
SM830	Real-time monitor in progress	ON : Being executed OFF : Not executed	Turns on during real-time monitor in progress	S (Status change)	New	LCPU*2
SM841	Auto logging	OFF: Not executed ON: Being executed	This relay is on while the auto logging is being executed. This relay turns off when auto logging is completed and the SD memory card lock switch is pressed and held for 1 second or longer to stop access to the SD memory card.	S (Status change)	New	QnUDV
			This relay is on while auto logging is being executed. This relay turns off when auto logging is completed and the SD memory card lock switch is slid toward the module top to stop access to the SD memory card.			LCPU

*1 Universal model QCPU except the Q00UJCPU
*2 Built-in Ethernet port LCPU whose serial number (first five digits) is "16072" or later

(9) Latch area

Number	Name	Meaning	Explanation	Set by (When Set)	Corresponding ACPU M9□□□	Corresponding CPU
SM916	Backup error check flag	OFF: No error ON: Error	This relay turns on if an error occurs at the execution of backup of the CPU module. This relay turns off at the start of backup.	S (Status change)	New	QnUDV*1 QnUDPV*1
SM922	Restoration error check flag	OFF: No error ON: Error	This relay turns on if an error occurs at the execution of restoration of the CPU module. This relay turns off at the start of backup.	S (Status change)	New	QnUDV*1 QnUDPV*1
SM923	Upper limit setting flag for the number of backup data	OFF: Backup continued ON: Backup stopped	This relay specifies the operation of backup when the number of backup data reaches the upper limit. (Valid only when bit5 of SD944 is on) OFF: After deleting the oldest date stamp folder, the backup is continued. ON: The backup is not continued if the upper limit of the number of backup data is exceeded. (In this case, the backup is completed with an error.)	U	New	QnUDV*3 QnUDPV*3
SM924	Automatic backup retry failure flag	OFF: Retry not executed/Retry being executed ON: Retry failed	This relay turns on when the retry of the automatic backup is failed even after the specified number of retries are attempted, and turns off at the start of the automatic backup. (This relay does not turn off when SM1926 is on.)	S (Status change)	New	QnUDV*3 QnUDPV*3
SM960	Data logging error check flag	OFF: No error ON: Error	This relay turns on if an error occurs during the execution of data logging. This relay turns off when the data logging is restarted by turning on SM1938 (Data logging restart flag at error stop) or is started or stopped by using the CPU Module Logging Configuration Tool.	S (Error)	New	QnUDV*1 QnUDPV*1 LCPU*2

*1 Modules whose serial number (first five digits) is "17103" or later
*2 The LCPU, except the L02SCPU and L02SCPU-P, whose serial number (first five digits) is "17102" or later
*3 Modules whose serial number (first five digits) is "18052" or later

(10)Conversion from A series to Q or L series

The special relay (M9000 to M9255) for ACPU corresponds to the special relay (SM1000 to SM1255) for QCPU or LCPU after the A to Q/L conversion. (Note that the Basic model QCPU and Redundant CPU do not support the A to Q/L conversion.) All bits in this area of the special relay are turned on or off by system (cannot be turned on or off by user using a program). To turn on or off the bit by user, correct the program using the special relay for QCPU or LCPU. The special relay (M9084, M9200 to M9255), however, includes the areas that can be turned on or off by user. For those areas, the bit can be turned on or off by user in the converted special relay (SM1084, SM1200 to SM1255) as well. For details on the special relay for ACPU, refer to the following.

User's manual for the CPU module used
Type MELSECNET, MELSECNET/B Data Link System Reference Manual

Point

To use the converted special relay in the High Performance model QCPU, Process CPU, Universal model QCPU, or LCPU, check "Use special relay/special register from SM/SD1000" under "A-PLC Compatibility Setting".

Project window ⇨ [Parameter] ⇨ [PLC Parameter] ⇨ [PLC System]

Note that the processing time will increase when the converted special relay is used.

[How to read the Special Relay for Modification column]

- If the special relay number for QCPU or LCPU is provided, correct the program using it.
- — means that the converted special relay can be used.
- ☒ means that the special relay cannot be used in QCPU or LCPU.

ACPU Special Relay	Special Relay after Conversion	Special Relay after Modification	Name	Meaning	Details	Corresponding CPU
M9000	SM1000	—	Fuse blown	OFF: Normal ON: Module with blown fuse	• This relay turns on if there is at least one output module whose fuse has blown. • This relay remains on even after the system returns to normal. • Output modules on remote I/O stations are also checked.	Qn(H) QnPH QnU*1 LCPU*4
M9002	SM1002	—	I/O module verify error	OFF: Normal ON: Error	• This relay turns on if the status of the I/O module differs from that registered at power-on. • This relay remains on even after the system returns to normal. • I/O modules on remote I/O stations are also checked. • This relay is reset only when SD1116 to SD1123 are reset.	Qn(H) QnPH QnU*1 LCPU
M9005	SM1005	—	AC DOWN detection	OFF: AC DOWN not detected ON: AC DOWN detected	• This relay turns on if a momentary power failure within 20ms occurs during use of an AC power supply module. • This relay is reset when the CPU module is powered off and then on.	Qn(H) QnPH QnU*1
					• This relay turns on if a momentary power failure within 10ms occurs when using an AC power supply module. • This relay is reset when the CPU module is powered off and then on.	LCPU
					• This relay turns on if a momentary power failure within 10ms occurs during use of a DC power supply module. • This relay is reset when the CPU module is powered off and then on.	Qn(H) QnPH QnU*1 LCPU
M9006	SM1006	—	Battery low	OFF: Normal ON: Battery low	• This relay turns on when the battery voltage drops to or below the specified. • It turns off when the battery voltage returns to normal.	Qn(H) QnPH QnU*1 LCPU
M9007	SM1007	—	Battery low latch	OFF: Normal ON: Battery low	• This relay turns on when the battery voltage drops to or below the specified. • This relay remains on even after the battery voltage returns to normal.	Qn(H) QnPH QnU*1 LCPU
M9008	SM1008	SM1	Self-diagnostic error	OFF: No error ON: Error	This relay turns on if an error is detected by self-diagnostics.	Qn(H) QnPH QnU*1 LCPU
M9009	SM1009	SM62	Annunciator detection	OFF: No F number detected ON: F number detected	• This relay turns on when the OUT F or SET F instruction is executed. • It turns off when the SD1124 value is cleared to zero.	Qn(H) QnPH QnU*1 LCPU
M9011	SM1011	SM56	Operation error flag	OFF: No error ON: Error	• This relay turns on when an operation error occurs during execution of an application instruction. • This relay remains on even after the system returns to normal.	Qn(H) QnPH QnU*1 (except the QnUDPV)
M9012	SM1012	SM700	Carry flag	OFF: Carry OFF ON: Carry ON	Carry flag used in application instruction	Qn(H) QnPH

ACPU Special Relay	Special Relay after Conversion	Special Relay after Modification	Name	Meaning	Details	Corresponding CPU
M9016	SM1016	×	Data memory clear flag	OFF: Ignored ON: Output cleared	When SM1016 turns on and remote RUN mode is activated from a computer, all the data memory including the latch range (except for the special relay and special register) is cleared.	Qn(H) QnPH
M9017	SM1017	×	Data memory clear flag	OFF: Ignored ON: Output cleared	When SM1017 turns on and remote RUN mode is activated from a computer, all the data memory that is not latched (except for the special relay and special register) is cleared.	Qn(H) QnPH
M9020	SM1020	—	User timing clock No.0	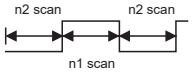	• This relay repeatedly turns on and off at the specified scan intervals. • When the CPU module is powered on or reset, this relay is set to on from off to start the clock. Set the intervals of on/off by DUTY instruction.  n1: On scan interval n2: Off scan interval • When SM1020 to SM1024 are specified for the DUTY instruction in programs, if the CPU type is changed from the High Performance model QCPU or Process CPU to the Universal model QCPU or LCPU, they are replaced with SM420 to SM424. (For the Universal model QCPU and LCPU, SM1020 to SM1024 cannot be specified.)	Qn(H) QnPH QnU*1 LCPU
M9021	SM1021	—	User timing clock No.1			
M9022	SM1022	—	User timing clock No.2			
M9023	SM1023	—	User timing clock No.3			
M9024	SM1024	—	User timing clock No.4			
M9025	SM1025	—	Clock data set request	OFF: Ignored ON: Set request	Clock data stored in SD1025 to SD1028 are written to the CPU module after the END instruction execution in the scan where SM1025 is turned on.	Qn(H) QnPH QnU*1 LCPU
M9026	SM1026	—	Clock data error	OFF: No error ON: Error	This relay turns on if an error occurs in the clock data (SD1025 to SD1028), and is off while there is no error.	Qn(H) QnPH QnU*1 LCPU
M9028	SM1028	—	Clock data read request	OFF: Ignored ON: Read request	This relay is turned on to read clock data and store them as BCD values into SD1025 to SD1028.	Qn(H) QnPH QnU*1 LCPU
M9029	SM1029	×	Batch processing of data communications requests	OFF: Batch processing not conducted ON: Batch processing conducted	• When this relay is turned on in the program, all the data communication requests accepted during one scan are processed in the END processing of that scan. • The batch processing of data communication requests can be turned on or off during running. • The default is OFF (processed one at a time for each END processing in the order in which data communication requests are accepted).	Qn(H) QnPH

ACPU Special Relay	Special Relay after Conversion	Special Relay after Modification	Name	Meaning	Details	Corresponding CPU
M9030	SM1030	—	0.1 second clock	0.05s 0.05s	• 0.1-, 0.2-, 1-, and 2-second clocks are generated. • The relay turns on or off not for each scan, but also during a scan if the time has elapsed. • This relay does not turn on/off per scan, but turns on/off whenever the specified time interval is reached. • The initial state when the CPU module is powered on or reset is off.	Qn(H) QnPH QnU*1 LCPU
M9031	SM1031	—	0.2 second clock	0.1s 0.1s		
M9032	SM1032	—	1 second clock	0.5s 0.5s		
M9033	SM1033	—	2 second clock	1s 1s		
M9034	SM1034	—	2n minute clock(1 minute clock)*2	ns ns	• This relay repeatedly turns on and off according to the number of seconds specified in SD414. (Default: n = 30) (If the value of SD414 is changed, the time that has passed after the previous ON/OFF interval of SM1034 is counted as the next interval, and the ON/OFF status is changed at the next interval that is newly specified.) Example: When the value of SD414 is changed from 3 to 10. 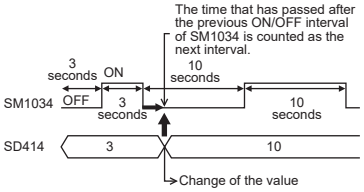 • This relay does not turn on/off per scan, but turns on/off whenever the specified time interval is reached. • The initial state when the CPU module is powered on or reset is off.	Qn(H) QnPH QnU*1 LCPU
M9036	SM1036	—	Always ON	ON OFF	• This relay is used for initialization or as a dummy contact of application instructions in the program. • SM1036 and SM1037 are turned on or off regardless of the switch setting on the front face of the CPU module. The states of SM1038 and SM1039 change depending on the switch setting. When it is set to STOP, the relay is off. When it is set to other than STOP, SM1038 is on for one scan only and SM1039 is off for one scan only.	Qn(H) QnPH QnU*1 LCPU
M9037	SM1037	—	Always OFF	ON OFF		
M9038	SM1038	—	ON for 1 scan only after RUN	ON 1 scan OFF		
M9039	SM1039	—	RUN flag(After RUN, OFF for 1 scan only)	ON 1 scan OFF		
M9040	SM1040	SM206	PAUSE enable coil	OFF: PAUSE disabled ON: PAUSE enabled	This relay is on when the CPU module is in PAUSE status or when the PAUSE contact is on.	Qn(H) QnPH
M9041	SM1041	SM204	PAUSE status contact	OFF: PAUSE not in effect ON: PAUSE in effect		Qn(H) QnPH QnU*1 LCPU
M9042	SM1042	SM203	STOP status contact	OFF: STOP not in effect ON: STOP in effect	This relay turns on when the RUN/STOP switch is set to STOP.	Qn(H) QnPH QnU*1 LCPU
M9043	SM1043	SM805	Sampling trace completed	OFF: Sampling trace in progress ON: Sampling trace completed	This relay turns on after execution of the TRACE instruction and upon completion of sampling trace performed the number of times preset by the parameter. Reset when TRACER instruction is executed.	Qn(H) QnPH QnU*1 LCPU

ACPU Special Relay	Special Relay after Conversion	Special Relay after Modification	Name	Meaning	Details	Corresponding CPU
M9045	SM1045	×	Watchdog timer (WDT) reset	OFF: Does not reset WDT ON: Resets WDT	If SM1045 is turned on, the watchdog timer is reset when the ZCOM instruction and batch processing of data communication requests are executed. (Use this when scan time exceeds 200ms.)	Qn(H) QnPH
M9046	SM1046	SM802	Sampling trace	OFF: Trace not in progress ON: Trace in progress	This relay is on during execution of sampling trace.	Qn(H) QnPH QnU*1 LCPU
M9047	SM1047	SM801	Sampling trace preparations	OFF: Sampling trace suspended ON: Sampling trace started	Sampling trace is not executed unless SM1047 is turned ON. Sampling trace is cancelled when SM1047 turns off.	Qn(H) QnPH
M9049	SM1049	SM701	Number of output characters selection	OFF: Output until NULL code encountered ON: 16 characters output	• When SM1049 is off, characters up to NULL (00_H) code are output. • When SM1049 is ON, ASCII codes of 16 characters are output.	Qn(H) QnPH
M9051	SM1051	×	CHG instruction execution disable	OFF: Enabled ON: Disable	• Switched ON to disable the CHG instruction. • Turn this on when requesting program transfer. It is automatically turned off upon completion of the transfer.	Qn(H) QnPH
M9052	SM1052	×	SEG instruction switch	OFF: 7-SEG segment display ON: I/O partial refresh	When SM1052 is on, the SEG instruction is used as an I/O part refresh instruction. When SM1052 is off, the SEG instruction is used as a 7-SEG display instruction.	Qn(H) QnPH
M9056	SM1056	×	Main side P, I set request	OFF: Other than when P, I set being requested ON: P, I set being requested	While a program is running, upon completion of transfer of another program (for example, a subprogram when the main program is running), a P and I set request is turned on. This relay automatically turns off upon completion of P and I setting.	Qn(H) QnPH
M9057	SM1057	×	Sub side P, I set request	OFF: Other than when P, I set being requested ON: P, I set being requested		
M9058	SM1058	×	Main side P, I set completion	Momentarily ON at P, I set completion	This relay turns on for a moment upon completion of P and I setting, and immediately turns off.	Qn(H) QnPH
M9059	SM1059	×	Sub program P, I set completion	Momentarily ON at P, I set completion		
M9060	SM1060	×	Sub program 2 P, I set request	OFF: Other than when P, I set being requested ON: P, I set being requested	While a program is running, upon completion of transfer of another program (for example, a subprogram when the main program is running), a P and I set request is turned on. This relay automatically turns off upon completion of P and I setting.	Qn(H) QnPH
M9061	SM1061	×	Sub program 3 P, I set request	OFF: Other than when P, I set being requested ON: P, I set being requested		
M9070	SM1070	×	A8UPU/A8PUJ required search time*3	OFF: Read time not shortened ON: Read time shortened	When this is turned on, the search time in the A8UPU/A8PUJ can be shortened. (In this case, the scan time is extended by 10%.)	Qn(H) QnPH
M9084	SM1084	×	Error check	OFF: Error check executed ON: No error check	This relay sets whether or not to check the following errors at the time of the END instruction processing (for setting of the END instruction processing time). • Check for fuse blown • Check of battery • Collation check of I/O module	Qn(H) QnPH
M9091	SM1091	×	Operation error details flag	OFF: No error ON: Error	• This relay turns on when the detail factor of the operation error is stored into SD1091. • This relay remains on even after the condition returns to normal.	Qn(H) QnPH

ACPU Special Relay	Special Relay after Conversion	Special Relay after Modification	Name	Meaning	Details	Corresponding CPU
M9100	SM1100	SM320	Presence/absence of SFC program	OFF: SFC program absent ON: SFC program present	This relay is on when an SFC program has been registered, and is off when no program is registered.	Qn(H) QnPH
M9101	SM1101	SM321	Start/stop SFC program	OFF: SFC programs stop ON: SFC programs start	• The same value as in SM1100 is set as the initial value. (This relay turns on when an SFC program is registered.) • This relay is turned off to stop SFC program execution. • This relay is turned on to resume the SFC program execution.	Qn(H) QnPH
M9102	SM1102	SM322	SFC program start status	OFF: Initial start ON: Resume start	In the SFC tab of "PLC parameter", "Initial start" is set for "SFC program start mode". • At initial start:OFF • At resume start:ON	Qn(H) QnPH
M9103	SM1103	SM323	Presence/absence of continuous transition	OFF: Continuous transition not effective ON: Continuous transition effective	Set whether to enable or disable continuous transition for the blocks where "continuous transition bit" of the SFC information device is not set.	Qn(H) QnPH
M9104	SM1104	SM324	Continuous transition prevention flag	OFF: When transition is executed ON: When no transition	• This relay is off while the module is in the continuous transition mode or during continuous transition, and is on when continuous transition is not executed. • This relay is always on while the CPU module is operating not in the continuous transition mode.	Qn(H) QnPH
M9108	SM1108	SM90	Step transition monitoring timer start (equivalent of SD90)	OFF: Monitoring timer reset ON: Monitoring timer reset start	The relay turns on when measurement by the step transition monitoring timer is started. The step transition monitoring timer is reset when the relay turns off.	Qn(H) QnPH
M9109	SM1109	SM91	Step transition monitoring timer start (equivalent of SD91)			
M9110	SM1110	SM92	Step transition monitoring timer start (equivalent of SD92)			
M9111	SM1111	SM93	Step transition monitoring timer start (equivalent of SD93)			
M9112	SM1112	SM94	Step transition monitoring timer start (equivalent of SD94)			
M9113	SM1113	SM95	Step transition monitoring timer start (equivalent of SD95)			
M9114	SM1114	SM96	Step transition monitoring timer start (equivalent of SD96)			

ACPU Special Relay	Special Relay after Conversion	Special Relay after Modification	Name	Meaning	Details	Corresponding CPU
M9196	SM1196	SM325	Operation output at block stop	OFF: Coil output OFF ON: Coil output ON	Selects the operation output when block stop is executed. • On: Retains the on or off status of the coil used in the operation output of the step, which was being executed at the time of block stop. • Off: Turns off all the coil outputs. (Operation output by the SET instruction is retained regardless of the on/off status of SM1196.)	Qn(H) QnPH
M9197	SM1197	×	Switch between blown fuse and I/O module verification error display	SM1197 / SM1198 / I/O numbers to be displayed OFF / OFF / X/Y0 to 7F0 ON / OFF / X/Y800 to FF0 OFF / ON / X/Y1000 to 17F0 ON / ON / X/Y1800 to 1FF0	Switches I/O numbers between the fuse-blown module registers (SD1100 to SD1107) and I/O module verify error registers (SD1116 to SD1123) according to the on/off combination of SM1197 and SM1198.	Qn(H) QnPH
M9198	SM1198	×				
M9199	SM1199	×	Data recovery of online sampling trace/status latch	OFF: Data recovery disabled ON: Data recovery enabled	• Recovers the setting data stored in the CPU module at restart when sampling trace/status latch is executed. • Turn this on to re-execute the sampling trace or status latch. (Rewriting data using the programming tool is not required.)	Qn(H) QnPH

*1 The following modules support these areas:
- Universal model QCPU whose serial number (first five digits) is "10102" or later
- Q00UJCPU, Q00UCPU, Q01UCPU

*2 The name, 1 minute clock, is for the special relay (M9034) of the ACPU.

*3 The QCPU and LCPU do not support the use of the A8UPU/A8PUJ.

*4 Modules whose serial number (first five digits) is "16112" or later

(11) Built-in Ethernet port QCPU, built-in Ethernet port LCPU, and built-in Ethernet function

Number	Name	Meaning	Explanation	Set by (When Set)	Corresponding ACPU M9□□□	Corresponding CPU
SM1258	MELSOFT connection extended setting network number, station number enable flag	OFF: Disabled ON: Enabled	This relay turns on when the network number and station number of built-in Ethernet port set in the MELSOFT connection extended setting are enabled. (Only when the MELSOFT connection extended setting is set to "Use".)	S (Initial)	New	QnUDV*5 QnUDPV*5
SM1270	Time setting function (SNTP client) execution	OFF: No time setting function (SNTP client) execution ON: Time setting function (SNTP client) execution	This relay is turned on to perform the time setting function (SNTP client). (Turns on only when "Use" has been set for the time setting function in the time setting parameter.)	U	New	QnU*1 LCPU*1
SM1273	Remote password mismatch count clear	OFF: Normal ON: Clear	This relay is turned on to clear the accumulated number of mismatched remote password entries (SD979 to SD999).	U	New	QnU*1 LCPU*1
SM1292	IP address storage area write request	OFF → ON:Write request	The IP address setting stored in SD1292 to SD1297 are written to the IP address storage area (flash ROM) of the CPU module when the END instruction is executed in the scan where this relay is turned on.	U	New	QnU*2 LCPU*3

Number	Name	Meaning	Explanation	Set by (When Set)	Corresponding ACPU M9□□□	Corresponding CPU
SM1293	IP address storage area write completion	OFF: Not completed ON: Completed	• This relay turns on when writing to the IP address storage area (flash ROM) is completed. • This relay turns off when the END instruction is executed in the scan where SM1292 is turned off.	S (Status change)	New	QnU*2 LCPU*3
SM1294	IP address storage area write error	OFF: Normal ON: Errors	• This relay turns on when writing to the IP address storage area (flash ROM) fails. • This relay turns off when the END instruction is executed in the scan where SM1292 is turned off.	S (Status change)	New	QnU*2 LCPU*3
SM1295	IP address storage area clear request	OFF → ON:Clear request	The IP address storage area (flash ROM) is cleared when the END instruction is executed in the scan where this relay is turned on.	U	New	QnU*2 LCPU*3
SM1296	IP address storage area clear completion	OFF: Not completed ON: Completed	• This relay turns on when clearing the IP address storage area (flash ROM) is completed. • This relay turns off when the END instruction is executed in the scan where SM1295 is turned off.	S (Status change)	New	QnU*2 LCPU*3
SM1297	IP address storage area clear error	OFF: Normal ON: Errors	• This relay turns on when clearing the IP address storage area (flash ROM) fails. • This relay turns off when the END instruction is executed in the scan where SM1295 is turned off.	S (Status change)	New	QnU*2 LCPU*3
SM1298	FTP client connection status	OFF: Not connected (Disconnected) ON: Connected	This relay turns on when the connection with the FTP server is established. This relay turns off when the connection with the FTP server is cut off.	S (Status change, END processing)	New	LCPU*4

*1 Built-in Ethernet port QCPU and Built-in Ethernet port LCPU
*2 Built-in Ethernet port QCPU whose serial number (first five digits) is "11082" or later
*3 Built-in Ethernet port LCPU whose serial number (first five digits) is "15102" or later
*4 Built-in Ethernet port LCPU whose serial number (first five digits) is "16112" or later
*5 Modules whose serial number (first five digits) is "17052" or later

(12)Predefined protocol function

Number	Name	Meaning	Explanation	Set by (When Set)	Corresponding ACPU M9□□□	Corresponding CPU
SM1332	Predefined protocol ready (for built-in/adapter serial communications)	OFF: Not ready ON: Ready	The protocol setting file is checked when the CPU module is powered on or reset, or the check is requested. This relay turns on when the file is normal.	S (Status change)	New	LCPU*1
SM1333	Predefined protocol setting check request (for built-in/adapter serial communications)	OFF: Not requested ON: Requested	The protocol setting file is checked when this relay turns on. The relay turns off when the check is completed.	S (Status change)/U	New	LCPU*1
SM1334	RS-422/485 echo back specification (for built-in/adapter serial communications)	OFF: Enabled ON: Disabled	When the RS-422/485 adapter is used, whether to receive an echo back of the data that has been sent can be specified. Echo back data are received when this relay is off, and are not received (discarded) when this relay is on.	U	New	LCPU*1
SM1354	Predefined protocol ready (for built-in Ethernet communications)	OFF: Not ready ON: Ready	The protocol setting file is checked when the CPU module is powered on or reset, or the check is requested. This relay turns on when the file is normal.	S (Status change)	New	QnUDV*2 QnUDPV*2 LCPU*1
SM1355	Predefined protocol setting check request (for built-in Ethernet communications)	OFF: Not requested ON: Requested	The protocol setting file is checked when this relay turns on. The relay turns off when the check is completed.	S (Status change)/U	New	QnUDV*2 QnUDPV*2 LCPU*1

*1 Built-in Ethernet port LCPU whose serial number (first five digits) is "15102" or later
*2 Modules whose serial number (first five digits) is "15103" or later

(13)iQ Sensor Solution

Number	Name	Meaning	Explanation	Set by (When Set)	Corresponding ACPU M9□□□	Corresponding CPU
SM1435	iQ Sensor Solution backup/restoration execution enable	OFF → ON:Enabled	Backup/restoration is enabled when this relay turns on. (Enabled only when SD1446 = 3_H (completed), 11_H (suspend (no error)), FE_H (suspend (error)), FF_H (error)). • This relay turns off when backup/restoration can be executed.	S (Status change)/U	New	QnUDV*1 QnUDPV*1 LCPU*2
SM1436	iQ Sensor Solution backup request	OFF → ON:Backup request	Backup is executed for the target model set when this relay turns on. (Enabled only when SD1446 = 1_H (in preparation)) • This relay turns off when the use authority is reserved or when backup/restoration can be executed.	S (Status change)/U	New	QnUDV*1 QnUDPV*1 LCPU*2
SM1437	iQ Sensor Solution backup normal completion	OFF: Backup not completed ON: Backup normally completed	This relay turns on when backup is completed normally. • This relay turns off when the use authority is reserved.	S (Status change)	New	QnUDV*1 QnUDPV*1 LCPU*2
SM1438	iQ Sensor Solution backup error completion	OFF: Backup not completed ON: Backup completed with an error	This relay turns on when backup is completed with an error. • This relay turns off when the use authority is reserved. The error code is stored into SD1452 or SD1453.	S (Status change)	New	QnUDV*1 QnUDPV*1 LCPU*2
SM1439	iQ Sensor Solution restoration request	OFF → ON:Restoration request	Restoration is executed for the target model set when this relay turns on. (Enabled only when SD1446 = 1_H (in preparation)) • This relay turns off when the use authority is reserved.	S (Status change)/U	New	QnUDV*1 QnUDPV*1 LCPU*2
SM1440	iQ Sensor Solution restoration normal completion	OFF: Restoration not completed ON: Restoration normally completed	This relay turns on when restoration is completed normally. • This relay turns off when the use authority is reserved.	S (Status change)	New	QnUDV*1 QnUDPV*1 LCPU*2
SM1441	iQ Sensor Solution restoration error completion	OFF: Restoration not completed ON: Restoration completed with an error	This relay turns on when restoration is completed with an error. • This relay turns off when the use authority is reserved. The error code is stored into SD1452 or SD1453.	S (Status change)	New	QnUDV*1 QnUDPV*1 LCPU*2
SM1442	iQ Sensor Solution backup/restoration suspend request	OFF → ON: Backup/Restoration suspend request	Backup/restoration is suspended when this relay turns on. (Enabled only for SD1446=2_H (execution)) • This relay turns off when the use authority is reserved or when backup/restoration can be executed.	S (Status change)	New	QnUDV*1 QnUDPV*1 LCPU*2
SM1445	Bridge area extension support status flag (iQ Sensor Solution backup/restoration)	OFF: Not supported ON: Supported	This flag indicates whether or not the CPU module used supports the bridge area extension for the iQ Sensor Solution backup/restoration.	S (Initial)	New	QnUDV*3 QnUDPV*3

*1 Modules whose serial number (first five digits) is "17012" or later
*2 Built-in Ethernet port LCPU whose serial number (first five digits) is "14112" or later
*3 Modules whose serial number (first five digits) is "20042" or later

(14)Process control instruction

Number	Name	Meaning	Explanation	Set by (When Set)	Corresponding ACPU M9□□□	Corresponding CPU
SM1500	Hold mode	OFF: No-hold ON: Hold	Specifies whether or not to hold the output value when a range over occurs for the S.IN instruction range check.	U	New	QnPH QnPRH QnUDPV
SM1501			Specifies whether or not the output value is held when a range over occurs for the S.OUT instruction range check.			

(15)Redundant system (host system CPU information*1)

The special relay (SM1510 to SM1599) is valid only for redundant systems. All bits are set to off for stand-alone systems.

Number	Name	Meaning	Explanation	Set by (When Set)	Corresponding ACPU M9□□□	Corresponding CPU
SM1510	Operation mode	OFF: Redundant system backup mode, stand-alone system ON: Redundant system separate mode	This relay is on while the system is operating in the separate mode.	S (Every END processing)	New	QnPRH
SM1511	System A identification flag	• Distinguishes between system A and system B. • The flag status does not change even if the tracking cable is disconnected.		S (Initial)	New	QnPRH
SM1512	System B identification flag					

	System A	System B	If TRK. CABLE ERR. (error code: 6210) occurred (Unknown)
SM1511	ON	OFF	OFF
SM1512	OFF	ON	OFF

Number	Name	Meaning	Explanation	Set by (When Set)	Corresponding ACPU M9□□□	Corresponding CPU
SM1513	Debug mode status flag	OFF: Not in debug mode ON: Debug mode	This relay is on while the system is operating in the debug mode.	S (Initial)	New	QnPRH
SM1515	Control system judgment flag	• Indicates operation system status. • The flag status does not change even if the tracking cable is disconnected.		S (Status change)	New	QnPRH
SM1516	Standby system judgment flag					

	Control system	Standby system	If TRK. CABLE ERR. (error code: 6210) occurred (Unknown)
SM1515	ON	OFF	OFF
SM1516	OFF	ON	OFF

Number	Name	Meaning	Explanation	Set by (When Set)	Corresponding ACPU M9□□□	Corresponding CPU
SM1517	CPU module startup status	OFF: Power supply on startup ON: Operation system switch start up	Turns on when the CPU module is started up by the system switching (switching from the standby system to the control system). Remains OFF when the standby system is switched to the control system by a power-ON startup.	S (Status change)	New	QnPRH
SM1518	Standby system to control system switching status flag	ON / OFF, 1 scan	• This relay turns on during one scan after the standby system was switched to the control system. • This relay can be used only in a scan execution type program.	S (Every END processing)	New	QnPRH
SM1519	Previous Control System Identification Flag	ON / OFF, 1 scan	When the previous control system is System B, this relay turns on during one scan in System A, following the RUN state after both Systems A and B were simultaneously turned on or were reset.	S (Every END processing)	New	QnPRH

Number	Name	Meaning	Explanation			Set by (When Set)	Corresponding ACPU M9□□□	Corresponding CPU
SM1520	Data tracking transfer trigger specification	OFF: No trigger ON: Trigger	SM1520	Block 1	• When data is transferred based on the tracking setting of the Redundant parameter window, the target block is specified as trigger. • When "Do auto forward Tracking block No.1" is selected for the tracking setting, SM1520 is turned on by the system at power-on or when the system is switched from STOP to RUN. In other cases, SM1520 to SM1583 are turned on by the user.	S (Initial)/U	New	QnPRH
SM1521			SM1521	Block 2				
SM1522			SM1522	Block 3				
SM1523			SM1523	Block 4				
SM1524			SM1524	Block 5				
SM1525			SM1525	Block 6				
SM1526			SM1526	Block 7				
SM1527			SM1527	Block 8				
SM1528			SM1528	Block 9				
SM1529			SM1529	Block 10				
SM1530			SM1530	Block 11				
SM1531			SM1531	Block 12				
SM1532			SM1532	Block 13				
SM1533			SM1533	Block 14				
SM1534			SM1534	Block 15				
SM1535			SM1535	Block 16				
SM1536			SM1536	Block 17				
SM1537			SM1537	Block 18				
SM1538			SM1538	Block 19				
SM1539			SM1539	Block 20				
SM1540			SM1540	Block 21				
SM1541			SM1541	Block 22				
SM1542			SM1542	Block 23				
SM1543			SM1543	Block 24				
SM1544			SM1544	Block 25				
SM1545			SM1545	Block 26				
SM1546			SM1546	Block 27				
SM1547			SM1547	Block 28				
SM1548			SM1548	Block 29				
SM1549			SM1549	Block 30				
SM1550			SM1550	Block 31				
SM1551			SM1551	Block 32				
SM1552			SM1552	Block 33				
SM1553			SM1553	Block 34				
SM1554			SM1554	Block 35				
SM1555			SM1555	Block 36				
SM1556			SM1556	Block 37				
SM1557			SM1557	Block 38				
SM1558			SM1558	Block 39				
SM1559			SM1559	Block 40				
SM1560			SM1560	Block 41				
SM1561			SM1561	Block 42				
SM1562			SM1562	Block 43				
SM1563			SM1563	Block 44				
SM1564			SM1564	Block 45				

Number	Name	Meaning	Explanation			Set by (When Set)	Corresponding ACPU M9□□□	Corresponding CPU
SM1565	Data tracking transfer trigger specification	OFF: No trigger ON: Trigger	SM1565	Block 46	• When data is transferred based on the tracking setting of the Redundant parameter window, the target block is specified as trigger. • When "Do auto forward Tracking block No.1" is selected for the tracking setting, SM1520 is turned on by the system at power-on or when the system is switched from STOP to RUN. In other cases, SM1520 to SM1583 are turned on by the user.	S (Initial)/U	New	QnPRH
SM1566			SM1566	Block 47				
SM1567			SM1567	Block 48				
SM1568			SM1568	Block 49				
SM1569			SM1569	Block 50				
SM1570			SM1570	Block 51				
SM1571			SM1571	Block 52				
SM1572			SM1572	Block 53				
SM1573			SM1573	Block 54				
SM1574			SM1574	Block 55				
SM1575			SM1575	Block 56				
SM1576			SM1576	Block 57				
SM1577			SM1577	Block 58				
SM1578			SM1578	Block 59				
SM1579			SM1579	Block 60				
SM1580			SM1580	Block 61				
SM1581			SM1581	Block 62				
SM1582			SM1582	Block 63				
SM1583			SM1583	Block 64				
SM1590	System switching enable/disable flag from network module	OFF: System switching request issuing module absent ON: System switching request issuing module present	Turns on when a system switching request is issued from the network module. The module that issued the request can be checked in SD1590. Turns off when all bits of SD1590 are off.			S (Every END processing)	New	QnPRH
SM1591	Standby system error detection disable flag at system switching	ON: Error is not detected by new standby system at system switching OFF: Error is detected by new standby system at system switching	This flag is used when switching the system in any of the following sources to determine whether to detect "STANDBY" (error code 6210) in the new standby system: [Reason(s) for system switching] • System switching with a programming tool • System switching using dedicated instruction • System switching by the intelligent function module			U	New	QnPRH
SM1592	Enable/disable user system switching	OFF: Disable user system switching ON: Enable user system switching	This relay stores whether to enable manual switching using a programming tool or the system switching instruction (SP.CONTSW).			U	New	QnPRH
SM1593	Setting to access extension base unit of standby system CPU	OFF: Error ON: Ignored	This relay sets the behavior of the system after the standby CPU in the separate mode accessed the buffer memory of an intelligent function module mounted on an extension base unit. • OFF: "OPERATION ERROR" (error code: 4112) is returned. • ON: No processing			U	New	QnPRH
SM1595	Memory copy to other system start flag	OFF: Start memory copy ON: No memory copy initiated	When SM1595 is turned on from off, memory copying from the control system to the standby system starts. Note that memory copy does not start even after SM1595 was turned on from off if the I/O No. of the copy destination (standby system CPU module: $3D1_H$) is not stored in SD1595.			U	New	QnPRH

Number	Name	Meaning	Explanation	Set by (When Set)	Corresponding ACPU M9□□□	Corresponding CPU
SM1596	Memory copy to other system status flag	OFF: Memory copy not executed ON: Memory copy executed	• This relay is on during memory copy from the control system to the standby system. • This relay turns off when memory copy is complete.	S (Starting to copy/finish)	New	QnPRH
SM1597	Memory copy to other system completion flag	OFF: Memory copy not completed ON: Memory copy completed	• This relay turns upon completion of memory copy from the control system to the standby system.	S (finish)/U	New	QnPRH
SM1598	Copy contents of standard ROM during memory copy	OFF: Copy standard ROM data ON: Standard ROM data is not copied	• If set to on by user, the standard ROM data is not copied to the other system while memory copy is executing.	U	New	QnPRH

*1 The information of the host CPU module is stored.

(16)Redundant system (other system CPU information*1)

The special relay (SM1600 to SM1649) is valid when the redundant system is in backup mode and is invalid in separate mode. All bits are set to off for stand-alone systems.

Number	Name	Meaning	Explanation	Set by (When Set)	Corresponding Host SM□□*2	Corresponding CPU
SM1600	Other system error flag	OFF: No error ON: Error	• This relay turns on if an error is detected by error check for redundant system. (This relay turns on when any of the SD1600 bits turns on.) • This relay turns off when an error is cleared.	S (Every END processing)	—	QnPRH
SM1610	Other system diagnostics error	OFF: No error ON: Error	• This relay turns on if a diagnostic error occurs in the CPU module in the other system. (Also turns off when an annunciator turns on and when an error is detected by the CHK instruction.) • The SM0 status for the CPU module in the other system is reflected.	S (Every END processing)	SM0	QnPRH
SM1611	Other systems self-diagnostics error	OFF: No error ON: Error	• This relay turns on if a self-diagnostics error occurred in the CPU module in the other system. (Excluding error detection by an annunciator and the CHK instruction.) • The SM1 status for the CPU module in the other system is reflected.	S (Every END processing)	SM1	QnPRH
SM1615	Other system common error information	OFF: No common error information present ON: Common error information present	• This relay turns on when there is error common information data for an error occurred in the CPU module in the other system. • The SM5 status for the CPU module in the other system is reflected.	S (Every END processing)	SM5	QnPRH
SM1626	Error individual information for other systems	OFF: No individual error information present ON: Individual error information present	• This relay turns on when there is error individual information for an error occurred in the CPU module in the other system. • The SM16 status for the CPU module in the other system is reflected.	S (Every END processing)	SM16	QnPRH
SM1649	Standby system cancel error flag	OFF → ON:Cancels error of standby system	This relay is turned on from off to clear a continuation error occurred in the standby system. Use SD1649 to specify the error code of the error to be canceled.	U	—	QnPRH

*1 Diagnostic information of the CPU module in the other system is stored.
*2 Special relay areas (SM□□) for the CPU module in the host system

(17)E-mail send/receive function

Number	Name	Meaning	Explanation	Set by (When Set)	Corresponding ACPU M9□□□	Corresponding CPU
SM1659	MC protocol command being processed flag	OFF: Not being processed ON: Being processed	• This relay turns on while the MC protocol command is being processed. • If the received mail is an MC protocol command mail, the relay turns off during the END processing of the scan where the command is processed and the return mail is sent.	S (Status change)	New	LCPU*1
SM1660	MC protocol command error flag	Turns on when an MC protocol command error is detected.	• This relay turns on when an MC protocol command error is detected. The relay also turns on when execution of MC protocol command is disabled in parameter. • The relay turns off upon execution of the e-mail receive instruction.	S (Error)	New	LCPU*1
SM1661	E-mail address backup processing flag	OFF: Not executed ON: Being executed	• This relay turns on when the e-mail address backup processing starts. • The relay turns off during the END processing of the scan where the processing completes.	S (Status change)	New	LCPU*1
SM1662	Incoming mail check flag	OFF: No incoming mail ON: Mail arrived	• This relay turns on when there is incoming mail on the server when checked. • The relay turns off during the END processing of the scan where the e-mail receive instruction processing completes.	S (Status change)	New	LCPU*1

*1 Built-in Ethernet port LCPU whose serial number (first five digits) is "16112" or later

(18)Redundant system (tracking information)

The special relay (SM1700 to SM1799) is valid when the redundant system is in backup mode or in separate mode. All bits are set to off for stand-alone systems.

Number	Name	Meaning	Explanation	Set by (When Set)	Corresponding ACPU M9□□□	Corresponding CPU
SM1700	Transfer trigger completion flag	OFF: Transfer uncompleted ON: Transfer completed	This relay remains on for one scan upon completion of a transfer for any of the blocks 1 to 64.	S (Status change)	New	QnPRH
SM1709	Manual system switching disable/enable setting during online program change redundant tracking	ON: Manual system switching enabled (Disable canceled) OFF: Manual system switching disabled	(1) This relay is turned from off to on to enable the user to switch a system during online program change for redundancy. After the manual system switching disable status is canceled, the system automatically turns off SM1709. (2) A system can be switched even the online program change for redundancy is being performed and regardless of the status of this relay, if the reason for the switching is any of the following: • Power-off • Reset • Hardware failure • CPU stop error (3) The system switching disable status can also be canceled by this relay during the following states. • Multiple-block online program change redundant tracking execution status • File batch online program change redundant tracking execution status	S (Request)/U	New	QnPRH

Number	Name	Meaning	Explanation			Set by (When Set)	Corresponding ACPU M9□□□	Corresponding CPU
SM1710	Transfer tracking data during online program change enable flag	OFF: No device tracking ON: Transfer device memory	(1) This relay specifies whether to execute a tracking transfer for the following control data during online program change for redundancy. • Device memory (Including SMs and SDs that automatically execute a tracking transfer) • PIDINIT information, S.PIDINIT information, SFC information (2) SM1710 can be also used to specify whether to enable a tracking transfer whole multiple-block online program change redundant tracking and while file batch online program change redundant tracking. (3) SM1710 is transferred from the control system to the standby system by tracking transfer.			U	New	QnPRH
SM1712	Transfer trigger completion flag	OFF: Transfer uncompleted ON: Transfer completed	SM1712	Block 1	This relay turns on only during one scan upon completion of a transfer for the relevant block.	S (Status change)	New	QnPRH
SM1713			SM1713	Block 2				
SM1714			SM1714	Block 3				
SM1715			SM1715	Block 4				
SM1716			SM1716	Block 5				
SM1717			SM1717	Block 6				
SM1718			SM1718	Block 7				
SM1719			SM1719	Block 8				
SM1720			SM1720	Block 9				
SM1721			SM1721	Block 10				
SM1722			SM1722	Block 11				
SM1723			SM1723	Block 12				
SM1724			SM1724	Block 13				
SM1725			SM1725	Block 14				
SM1726			SM1726	Block 15				
SM1727			SM1727	Block 16				
SM1728			SM1728	Block 17				
SM1729			SM1729	Block 18				

Number	Name	Meaning	Explanation			Set by (When Set)	Corresponding ACPU M9□□□	Corresponding CPU
SM1730	Transfer trigger completion flag	OFF: Transfer uncompleted ON: Transfer completed	SM1730	Block 19	This relay turns on only during one scan upon completion of a transfer for the relevant block.	S (Status change)	New	QnPRH
SM1731			SM1731	Block 20				
SM1732			SM1732	Block 21				
SM1733			SM1733	Block 22				
SM1734			SM1734	Block 23				
SM1735			SM1735	Block 24				
SM1736			SM1736	Block 25				
SM1737			SM1737	Block 26				
SM1738			SM1738	Block 27				
SM1739			SM1739	Block 28				
SM1740			SM1740	Block 29				
SM1741			SM1741	Block 30				
SM1742			SM1742	Block 31				
SM1743			SM1743	Block 32				
SM1744			SM1744	Block 33				
SM1745			SM1745	Block 34				
SM1746			SM1746	Block 35				
SM1747			SM1747	Block 36				
SM1748			SM1748	Block 37				
SM1749			SM1749	Block 38				
SM1750			SM1750	Block 39				
SM1751			SM1751	Block 40				
SM1752			SM1752	Block 41				
SM1753			SM1753	Block 42				
SM1754			SM1754	Block 43				
SM1755			SM1755	Block 44				
SM1756			SM1756	Block 45				
SM1757			SM1757	Block 46				
SM1758			SM1758	Block 47				
SM1759			SM1759	Block 48				
SM1760			SM1760	Block 49				
SM1761			SM1761	Block 50				
SM1762			SM1762	Block 51				
SM1763			SM1763	Block 52				
SM1764			SM1764	Block 53				
SM1765			SM1765	Block 54				
SM1766			SM1766	Block 55				
SM1767			SM1767	Block 56				
SM1768			SM1768	Block 57				
SM1769			SM1769	Block 58				
SM1770			SM1770	Block 59				
SM1771			SM1771	Block 60				
SM1772			SM1772	Block 61				
SM1773			SM1773	Block 62				
SM1774			SM1774	Block 63				
SM1775			SM1775	Block 64				

(19)Redundant power supply module information

Number	Name	Meaning	Explanation	Set by (When Set)	Corresponding ACPU M9□□□	Corresponding CPU
SM1780	Power supply off detection flag	OFF: No redundant power supply module with input power OFF detected ON: Redundant power supply module with input power OFF detected	• Turns on when one or more redundant power supply modules with input power off are detected. • Turns on if any of SD1780 bits is on. • Turns off if all bits of SD1780 are off. • This relay turns off when the main base unit is not the redundant main base unit (Q38RB). • When the multiple CPU system is configured, the flags are stored only to the CPU No.1.	S (Every END processing)	New	Qn(H)*3 QnPH*3 QnPRH QnU*4
SM1781	Power supply failure detection flag	OFF: No faulty redundant power supply module detected ON: Faulty redundant power supply module detected	• Turns on when one or more faulty redundant power supply modules are detected. • Turns on if any of SD1781 bits is on. • Turns off if all bits of SD1781 are off. • This relay turns off when the main base unit is not the redundant main base unit (Q38RB). • When the multiple CPU system is configured, the flags are stored only to the CPU No.1.	S (Every END processing)	New	Qn(H)*3 QnPH*3 QnPRH QnU*4
SM1782	Momentary power failure detection flag for power supply 1*1	OFF: No momentary power failure detected ON: Momentary power failure detected	• Turns on when a momentary power failure of the input power supply to the power supply 1 or 2 is detected one or more times. After turning on, this relay remains on even if the power supply recovers from the momentary power failure. • Turns off the flags (SM1782 and SM1783) of the power supply 1 and 2 when the CPU module starts. • When the input power to one of the redundant power supply modules turns off, the corresponding flag turns off. • This relay turns off when the main base unit is not the redundant main base unit (Q38RB). • When the multiple CPU system is configured, the flags are stored only to the CPU No.1.	S (Every END processing)	New	Qn(H)*3 QnPH*3 QnPRH QnU*4
SM1783	Momentary power failure detection flag for power supply 2*2					

*1 The "power supply 1" indicates the redundant power supply module mounted on the POWER 1 slot of the redundant base unit (Q38RB/Q68RB/Q65WRB).

*2 The "power supply 2" indicates the redundant power supply module mounted on the POWER 2 slot of the redundant base unit (Q38RB/68RB/Q65WRB).

*3 Modules whose serial number (first five digits) is "07032" or later
In a multiple CPU system, the serial number (first five digits) of all the CPU modules must be "07032" or later.

*4 Modules whose serial number (first five digits) is "10042" or later

(20)CC-Link IE Field Network Basic function

Number	Name	Meaning	Explanation	Set by (When Set)	Corresponding ACPU M9□□□	Corresponding CPU
SM1700	Cyclic transmission status	Off: Not performed On: Being performed	• This relay turns on when the cyclic transmission starts. • This relay turns off when the cyclic transmission stops.	S (Every END processing)	New	QnUDV*1 QnUDPV*1 LCPU*2
SM1704	Data link status	Off: All stations normal On: One or more faulty stations	• This relay turns on when an error exists even in one device station. • The status of each device station can be checked in SD1540.	S (Every END processing)	New	QnUDV*1 QnUDPV*1 LCPU*2
SM1718	Reserved station specification status	Off: Not specified On: Specified	• This relay turns on when even one device station is specified as a reserved station in parameter. • The station number that is specified as a reserved station can be checked in SD1718.	S (Initial)	New	QnUDV*1 QnUDPV*1 LCPU*2
SM1741	Diagnostic information display request	Off→On:Request issued On→Off:Completed	• After the END instruction of the scan where the relay turns on, the diagnostic information of the device station specified in SD1741 is read to SD1742 to SD1773. • This relay turns off when reading of the diagnostic information has completed at END processing.	U/S (During END processing)	New	QnUDV*1 QnUDPV*1 LCPU*2

*1 Modules whose serial number (first five digits) is "18112" or later

*2 Built-in Ethernet port LCPU whose serial number (first five digits) is "18112" or later

(21)Built-in I/O function

Number	Name	Meaning	Explanation	Set by (When Set)	Corresponding ACPU M9□□□	Corresponding CPU
SM1840	Axis 1 busy	OFF: Not busy ON: Busy	• This relay turns on when positioning control, OPR control, JOG operation, or absolute position restoration is started. This relay turns off when each control is completed. In positioning control, this relay turns off when the axis 1 decelerates and stops, and then "dwell time" elapsed. (This relay remains on while positioning control is being performed.) • This relay turns off when each control is ended due to such as an error or stop operation.	S (Every END processing)	New	LCPU
SM1841	Axis 1 positioning completion	OFF: Not completed ON: Completed	• This relay turns on when OPR control, position control, or absolute position restoration is completed. • This relay turns off when OPR control, positioning control, absolute position restoration, or JOG operation is started. • This relay remains off when JOG operation is completed. • This relay remains off when position control is stopped.	S (Instruction execution/Status change)	New	LCPU
SM1842	Axis 1 OPR request	OFF: Machine OPR control completed ON: Machine OPR control started	• This relay turns on when the CPU module is powered on, is reset, or is set from STOP to RUN; or the drive unit ready signal turns off; or machine OPR control is started. • This relay turns off when machine OPR control is completed.	S (Every END processing)	New	LCPU

Number	Name	Meaning	Explanation	Set by (When Set)	Corresponding ACPU M9□□□	Corresponding CPU
SM1843	Axis 1 OPR completion	OFF: Not completed ON: Completed	• This relay turns on when machine OPR control is completed. • This relay turns off when OPR control, positioning control, absolute position restoration, or JOG operation is started; or the CPU module is set from STOP to RUN; or the drive unit ready signal turns off.	S (Instruction execution/Status change)	New	LCPU
SM1844	Axis 1 speed 0	OFF: Operating at speed other than 0 ON: Operating at speed 0	• This relay turns on when JOG operation or speed control in speed/position switching control set at a speed of "0" is started. • This relay turns on when speed is changed with a new speed value of "0", and turns off when speed is changed with a new speed value other than "0". • This relay turns off when SM1840 turns off.	S (Every END processing)	New	LCPU
SM1845	Axis 1 error	OFF: No error ON: Error	• This relay turns on if an error occurs. • The present error can be checked by SD1845. • This relay is turned off by turning on SM1850.	S (Every END processing)	New	LCPU
SM1846	Axis 1 warning	OFF: No warning ON: Warning	• This relay turns on if a warning occurs. • The present warning can be checked by SD1846. • This relay is turned off by turning on SM1850.	S (Every END processing)	New	LCPU
SM1847	Axis 1 start in busy status	OFF: No start attempted in busy status ON: Start attempted in busy status	• This relay turns on when positioning control, OPR control, JOG operation, or absolute position restoration is attempted while the axis 1 is in the busy status. The executed start instruction will be ignored. • This relay is reset by the user.	S (Instruction execution)/U	New	LCPU
SM1848	Axis 1 start instruction	OFF: Not executed ON: Being executed	• This relay turns on when positioning control by the start instruction (IPPSTRT1(P), IPDSTRT1(P), IPSIMUL(P), IPABRST1), JOG operation by the JOG start instruction (IPJOG1), or OPR control by the OPR start instruction (IPOPR1(P)) is started. • This relay turns off when positioning control, OPR control, or JOG operation is completed.	S (Instruction execution/Status change)	New	LCPU
SM1850	Axis 1 error reset	OFF → ON:Resets the Axis 1 error. OFF: Clears the reset status.	• Turning on this relay will turn off SM1845 and SM1846 and will clear the SD1845 and SD1846 values to "0". • Even if this relay is turned on, SM1845 will not turn off and the SD1845 value will not be cleared to "0" until SM1840 turns off.	U	New	LCPU
SM1851	Axis 1 OPR request off	OFF → ON:Axis 1 OPR request OFF: Cleared	Turning on this relay will forcibly turn off SM1842.	U	New	LCPU
SM1852	Axis 1 speed/position switching	OFF: Disabled ON: Enabled	This relay stores whether to enable switching from speed control to position control in speed/position switching control.	U	New	LCPU

Number	Name	Meaning	Explanation	Set by (When Set)	Corresponding ACPU M9□□□	Corresponding CPU
SM1860	Axis 2 busy	OFF: Not busy ON: Busy	• This relay turns on when positioning control, OPR control, JOG operation, or absolute position restoration is started. This relay turns off when each control is completed. In positioning control, this relay turns off when the axis 1 decelerates and stops, and then "dwell time" elapsed. (This relay remains on while positioning control is being performed.) • This relay turns off when each control is ended due to such as an error or stop operation.	S (Every END processing)	New	LCPU
SM1861	Axis 2 positioning completion	OFF: Not completed ON: Completed	• This relay turns on when OPR control, position control, or absolute position restoration is completed. • This relay turns off when OPR control, positioning control, absolute position restoration, or JOG operation is started. • This relay remains off when JOG operation is completed. • This relay remains off when position control is stopped.	S (Instruction execution/Status change)	New	LCPU
SM1862	Axis 2 OPR request	OFF: Machine OPR control completed ON: Machine OPR control started	• This relay turns on when the CPU module is powered on, is reset, or is set from STOP to RUN; or the drive unit ready signal turns off; or machine OPR control is started. • This relay turns off when machine OPR control is completed.	S (Every END processing)	New	LCPU
SM1863	Axis 2 OPR completion	OFF: Not completed ON: Completed	• This relay turns on when machine OPR control is completed. • This relay turns off when OPR control, positioning control, absolute position restoration, or JOG operation is started; or the CPU module is set from STOP to RUN; or the drive unit ready signal turns off.	S (Instruction execution/Status change)	New	LCPU
SM1864	Axis 2 speed 0	OFF: Operating at speed other than 0 ON: Operating at speed 0	• This relay turns on when JOG operation or speed control in speed/position switching control set at a speed of "0" is started. • This relay turns on when speed is changed with a new speed value of "0", and turns off when speed is changed with a new speed value other than "0". • This relay turns off when SM1860 turns off.	S (Every END processing)	New	LCPU
SM1865	Axis 2 error	OFF: No error ON: Error	• This relay turns on if an error occurs. • The present error can be checked by SD1865. • This relay is turned off by turning on SM1870.	S (Every END processing)	New	LCPU
SM1866	Axis 2 warning	OFF: No warning ON: Warning	• This relay turns on if a warning occurs. • The present warning can be checked by SD1866. • This relay is turned off by turning on SM1870.	S (Every END processing)	New	LCPU
SM1867	Axis 2 start in busy status	OFF: No start attempted in busy status ON: Start attempted in busy status	• This relay turns on when positioning control, OPR control, JOG operation, or absolute position restoration is attempted while the axis 2 is in the busy status. The executed start instruction will be ignored. • This relay is reset by the user.	S (Instruction execution)/U	New	LCPU

Number	Name	Meaning	Explanation	Set by (When Set)	Corresponding ACPU M9□□□	Corresponding CPU
SM1868	Axis 2 start instruction	OFF: Not executed ON: Being executed	• This relay turns on when positioning control by the start instruction (IPPSTRT2(P), IPDSTRT2(P), IPSIMUL(P), IPABRST2), JOG operation by the JOG start instruction (IPJOG2), or OPR control by the OPR start instruction (IPOPR2(P)) is started. • This relay turns off when positioning control, OPR control, or JOG operation is completed.	S (Instruction execution/Status change)	New	LCPU
SM1870	Axis 2 error reset	OFF → ON:Resets the Axis 2 error. OFF: Clears the reset status.	• Turning on this relay will turn off SM1865 and SM1866 and will clear the SD1865 and SD1866 values to "0". • Even if this relay is turned on, SM1865 will not turn off and the SD1865 value will not be cleared to "0" until SM1860 turns off.	U	New	LCPU
SM1871	Axis 2 OPR request off	OFF → ON:Axis 2 OPR request OFF: Cleared	Turning on this relay will forcibly turn off SM1862.	U	New	LCPU
SM1872	Axis 2 speed/position switching	OFF: Disabled ON: Enabled	This relay stores whether to enable switching from speed control to position control in speed/position switching control.	U	New	LCPU
SM1880	CH1 counter value greater (No.1)	OFF: Coincidence point (No.1) or smaller ON: Greater than coincidence point (No.1)	• This relay turns on when "current value of CH1 > coincidence output No.1 point setting value" is met. • This relay turns off when "current value of CH1 ≤ coincidence output No.1 point setting value" is met.	S (Every END processing)	New	LCPU
SM1881	CH1 counter value coincidence (No.1)	OFF: Not detected ON: Detected	• This relay turns on when "current value of CH1 = coincidence output No.1 point setting value" is met. • This relay is turned off by turning on CH1 coincidence signal No.1 reset command.	S (Status change/Every END processing)	New	LCPU
SM1882	CH1 counter value smaller (No.1)	OFF: Coincidence point (No.1) or greater ON: Smaller than coincidence point (No.1)	• This relay turns on when "current value of CH1 < coincidence output No.1 point setting value" is met. • This relay turns off when "current value of CH1 ≥ coincidence output No.1 point setting value" is met.	S (Every END processing)	New	LCPU
SM1883	CH1 counter value greater (No.2)	OFF: Coincidence point (No.2) or smaller ON: Greater than coincidence point (No.2)	• This relay turns on when "current value of CH1 > coincidence output No.2 point setting value" is met. • This relay turns off when "current value of CH1 ≤ coincidence output No.2 point setting value" is met.	S (Every END processing)	New	LCPU
SM1884	CH1 counter value coincidence (No.2)	OFF: Not detected ON: Detected	• This relay turns on when "current value of CH1 = coincidence output No.2 point setting value" is met. • This relay is turned off by turning on CH1 coincidence signal No.2 reset command.	S (Status change/Every END processing)	New	LCPU
SM1885	CH1 counter value smaller (No.2)	OFF: Coincidence point (No.2) or greater ON: Smaller than coincidence point (No.2)	• This relay turns on when "current value of CH1 < coincidence output No.2 point setting value" is met. • This relay turns off when "current value of CH1 ≥ coincidence output No.2 point setting value" is met.	S (Every END processing)	New	LCPU
SM1886	CH1 external preset (phase Z) request detection	OFF: Not detected ON: Detected	• This relay turns on when a preset request by phase Z (preset) terminal of CH1 is detected. • This relay is turned off by turning on CH1 external preset (phase Z) request detection clear command.	S (Every END processing)	New	LCPU

Number	Name	Meaning	Explanation	Set by (When Set)	Corresponding ACPU M9□□□	Corresponding CPU
SM1887	CH1 error	OFF: No error ON: Error	• This relay turns on if the CH1 error occurs. • This relay turns off when an error cause is removed and CH1 error reset command is turned on.	S (Every END processing)	New	LCPU
SM1888	CH1 warning	OFF: No warning ON: Warning	• This relay turns on if a warning occurs in CH1. • This relay turns off when a warning cause is removed and CH1 error reset command is turned on.	S (Every END processing)	New	LCPU
SM1890	CH1 coincidence signal No.1 reset command	Resets CH1 counter value coincidence No.1.	• This relay is turned on to reset CH1 counter value coincidence No.1. • The command is valid while this relay is on. • The on time must be held for at least 2ms.	U	New	LCPU
SM1891	CH1 coincidence signal No.2 reset command	Resets CH1 counter value coincidence No.2.	• This relay is turned on to reset CH1 counter value coincidence No.2. • The command is valid while this relay is on. • The on time must be held for at least 2ms.	U	New	LCPU
SM1892	CH1 coincidence output enable command	Controls outputs from CH1 coincidence output No.1 and No.2 terminals.	• This relay is turned on to perform coincidence output from CH1 coincidence output No.1 and CH1 coincidence output No.2 terminals. • The command is valid while this relay is on.	U	New	LCPU
SM1893	CH1 preset command	Presets the counter value.	• This relay is turned on to preset the counter value. • The command is valid at the rise of this relay (off → on). • The on and off time must be held for at least 2ms.	U	New	LCPU
SM1894	CH1 count down command	Counts down pulses.	• This relay is turned on to count down pulses. • The command is valid while the Pulse input mode is either 1-phase multiple of n or 1-phase multiple of n (A phase only). • The command is valid while this relay is on.	U	New	LCPU
SM1895	CH1 count enable command	Starts counting.	• This relay is turned on to start counting. • The command is valid while this relay is on.	U	New	LCPU
SM1896	CH1 counter function selection start command	Starts the selected counter function.	• This relay is turned on to start the selected counter function. • When the count disabling function is selected, the command is valid while this relay is on. • When the latch counter function or the sampling counter function is selected, the command is valid at the rise of this relay (off → on). The on time must be held for at least 2ms. • When the count disabling/preset function or the latch counter/preset function is selected, the command is invalid.	U	New	LCPU
SM1897	CH1 external preset (phase Z) request detection reset command	Resets CH1 external preset (phase Z) request detection.	• This relay is turned on to reset CH1 external preset (phase Z) request detection. • The command is valid at the rise of this relay (off → on). • The on and off time must be held for at least 2ms.	U	New	LCPU

Number	Name	Meaning	Explanation	Set by (When Set)	Corresponding ACPU M9□□□	Corresponding CPU
SM1898	CH1 pulse measurement start command	Starts pulse measurement.	• This relay is turned on to measure pulses. • The command is valid while this relay is on.	U	New	LCPU
SM1899	CH1 error reset command	Resets the CH1 error.	• This relay is turned on to reset the CH1 error. • The command is valid at the rise of this relay (off → on). • The on and off time must be held for at least 2ms.	U	New	LCPU
SM1900	CH2 counter value greater (No.1)	OFF: Coincidence point (No.1) or smaller ON: Greater than coincidence point (No.1)	• This relay turns on when "current value of CH2 > coincidence output No.1 point setting value" is met. • This relay turns off when "current value of CH2 ≤ coincidence output No.1 point setting value" is met.	S (Every END processing)	New	LCPU
SM1901	CH2 counter value coincidence (No.1)	OFF: Not detected ON: Detected	• This relay turns on when "current value of CH2 = coincidence output No.1 point setting value" is met. • This relay is turned off by turning on CH2 coincidence signal No.1 reset command.	S (Status change/Every END processing)	New	LCPU
SM1902	CH2 counter value smaller (No.1)	OFF: Coincidence point (No.1) or greater ON: Smaller than coincidence point (No.1)	• This relay turns on when "current value of CH2 < coincidence output No.1 point setting value" is met. • This relay turns off when "current value of CH2 ≥ coincidence output No.1 point setting value" is met.	S (Every END processing)	New	LCPU
SM1903	CH2 counter value greater (No.2)	OFF: Coincidence point (No.2) or smaller ON: Greater than coincidence point (No.2)	• This relay turns on when "current value of CH2 > coincidence output No.2 point setting value" is met. • This relay turns off when "current value of CH2 ≤ coincidence output No.2 point setting value" is met.	S (Every END processing)	New	LCPU
SM1904	CH2 counter value coincidence (No.2)	OFF: Not detected ON: Detected	• This relay turns on when "current value of CH2 = coincidence output No.2 point setting value" is met. • This relay is turned off by turning on CH2 coincidence signal No.2 reset command.	S (Status change/Every END processing)	New	LCPU
SM1905	CH2 counter value smaller (No.2)	OFF: Coincidence point (No.2) or greater ON: Smaller than coincidence point (No.2)	• This relay turns on when "current value of CH2 < coincidence output No.2 point setting value" is met. • This relay turns off when "current value of CH2 ≥ coincidence output No.2 point setting value" is met.	S (Every END processing)	New	LCPU
SM1906	CH2 external preset (phase Z) request detection	OFF: Not detected ON: Detected	• This relay turns on when a preset request by phase Z (preset) terminal of CH2 is detected. • This relay is turned off by turning on CH2 external preset (phase Z) request detection clear command.	S (Every END processing)	New	LCPU
SM1907	CH2 Error	OFF: No error ON: Error	• This relay turns on if the CH2 error occurs. • This relay turns off when an error cause is removed and CH2 error reset command is turned on.	S (Every END processing)	New	LCPU
SM1908	CH2 warning	OFF: No warning ON: Warning	• This relay turns on if a warning occurs in CH2. • This relay turns off when a warning cause is removed and CH2 error reset command is turned on.	S (Every END processing)	New	LCPU
SM1910	CH2 coincidence signal No.1 reset command	Resets CH2 counter value coincidence No.1.	• This relay is turned on to reset CH2 counter value coincidence No.1. • The command is valid while this relay is on. • The on time must be held for at least 2ms.	U	New	LCPU

Number	Name	Meaning	Explanation	Set by (When Set)	Corresponding ACPU M9□□□	Corresponding CPU
SM1911	CH2 coincidence signal No.2 reset command	Resets CH2 counter value coincidence No.2.	• This relay is turned on to reset CH2 counter value coincidence No.2. • The command is valid while this relay is on. • The on time must be held for at least 2ms.	U	New	LCPU
SM1912	CH2 coincidence output enable command	Controls outputs from CH2 coincidence output No.1 and No.2 terminals.	• This relay is turned on to perform coincidence output from CH2 coincidence output No.1 and CH2 coincidence output No.2 terminals. • The command is valid while this relay is on.	U	New	LCPU
SM1913	CH2 preset command	Presets the counter value.	• This relay is turned on to preset the counter value. • The command is valid at the rise of this relay (off → on). • The on and off time must be held for at least 2ms.	U	New	LCPU
SM1914	CH2 count down command	Counts down pulses.	• This relay is turned on to count down pulses. • The command is valid while the Pulse input mode is either 1-phase multiple of n or 1-phase multiple of n (A phase only). • The command is valid while this relay is on.	U	New	LCPU
SM1915	CH2 count enable command	Starts counting.	• This relay is turned on to start counting. • The command is valid while this relay is on.	U	New	LCPU
SM1916	CH2 counter function selection start command	Starts the selected counter function.	• This relay is turned on to start the selected counter function. • When the count disabling function is selected, the command is valid while this relay is on. • When the latch counter function or the sampling counter function is selected, the command is valid at the rise of this relay (off → on). The on time must be held for at least 2ms. • When the count disabling/preset function or the latch counter/preset function is selected, the command is invalid.	U	New	LCPU
SM1917	CH2 external preset (phase Z) request detection reset command	Resets CH2 external preset (phase Z) request detection.	• This relay is turned on to reset CH2 external preset (phase Z) request detection. • The command is valid at the rise of this relay (off → on). • The on and off time must be held for at least 2ms.	U	New	LCPU
SM1918	CH2 pulse measurement start command	Starts pulse measurement.	• This relay is turned on to measure pulses. • The command is valid while this relay is on.	U	New	LCPU
SM1919	CH2 error reset command	Resets the CH2 error.	• This relay is turned on to reset the CH2 error. • The command is valid at the rise of this relay (off → on). • The on and off time must be held for at least 2ms.	U	New	LCPU

(22)CPU module data backup/restoration function

Number	Name	Meaning	Explanation	Set by (When Set)	Corresponding ACPU M9□□□	Corresponding CPU
SM1925	Backup status flag	OFF: Not being executed ON: Being executed	This relay turns on during execution of backup.	S (Status change)	New	QnUDV*1 QnUDPV*1
SM1926	Backup execution request	OFF: Not requested ON: Requested	If this relay is turned off and then on, backup execution request is issued when the END processing of the scan is executed. This relay is turned off by the system after the backup is completed.	S (Status change)/U	New	QnUDV*1 QnUDPV*1
SM1928	Restoration status flag	OFF: Not being executed ON: Being executed	This relay turns on during execution of restoration	S (Status change)	New	QnUDV*1 QnUDPV*1
SM1929	Restoration execution request	OFF: Not requested ON: Requested	If this relay is turned off and then on when the CPU module is in STOP state, restoration execution request is issued. This relay is turned off by the system after the restoration is completed.	S (Status change)/U	New	QnUDV*1 QnUDPV*1
SM1931	Retry status flag for automatic backup	OFF: Not being executed ON: Being executed	This relay turns on during the retry of the automatic backup. (This relay turns on at the start of the retry, and turns off when the automatic backup is triggered by the retry while the exclusive functions are not executed, or when the specified number of retries are attempted.)	S (Status change)	New	QnUDV*2 QnUDPV*2

*1 Modules whose serial number (first five digits) is "17103" or later
*2 Modules whose serial number (first five digits) is "18052" or later

(23)Data logging

Number	Name	Meaning	Explanation	Set by (When Set)	Corresponding ACPU M9□□□	Corresponding CPU
SM1938	Data logging restart flag at error stop	OFF: Not restarted ON: Restarted	When SM960 (Data logging error check flag) is ON, the data logging is restarted by turning off and then on this relay. This relay is turned off when the CPU module is powered off and then on or is reset.	U	New	QnUDV*2 QnUDPV*2 LCPU*3
SM1940	Data logging setting No.1 Data logging preparation	OFF: Not ready ON: Ready	This relay turns on when the system is ready for data logging. This relay remains on even after data logging is suspended. However, this relay turns off when data logging is stopped.	S (Initial)	New	QnUDV QnUDPV LCPU
SM1941	Data logging setting No.1 Data logging start	OFF: Pause ON: Start	This relay is turned on to start data logging while the CPU module is set to RUN and is turned off to suspend data logging. (The related special relays will all turn off.) Even if this relay is turned on while the CPU module is set to STOP, data logging will not be started.	S (Status change)/U	New	QnUDV QnUDPV LCPU
SM1942	Data logging setting No.1 Data logging collection	OFF: Not being collected ON: Being collected	This relay is on while data logging is being collected.	S (Status change)	New	QnUDV QnUDPV LCPU

Number	Name	Meaning	Explanation	Set by (When Set)	Corresponding ACPU M9□□□	Corresponding CPU
SM1943	Data logging setting No.1 Data logging end	OFF: Not ended ON: Ended	This relay turns on when data logging is ended. [Continuous is set for Logging type] The corresponding bit turns on when data logging is ended after data have been written by the number of storable files (Stop is set for Operation occurring when number of saved files is exceeded). [Trigger is set for Logging type] The corresponding bit turns on when the trigger condition is met, data are collected by the number of set times, and then the data are written to the SD memory card. This relay also turns on if an error occurs during data logging (except data logging error occurred by the execution of online change).	S (Status change)	New	QnUDV QnUDPV LCPU
SM1944	Data logging setting No.1 Data logging trigger	OFF → ON:Triggered	• This relay turns on when the specified trigger condition is met. • This relay is turned on to meet the trigger condition.	S (Status change)/U	New	QnUDV QnUDPV LCPU
SM1945	Data logging setting No.1 After data logging trigger	OFF: Not after trigger ON: After trigger	This relay turns on after trigger logging is triggered. This relay remains on even after data logging is completed. This relay turns off when trigger logging is suspended or stopped.	S (Status change)	New	QnUDV QnUDPV LCPU
SM1946	Data logging setting No.1 Data logging error	OFF: No error ON: Error	This relay turns on if a data logging error occurs. This relay is turned off by the registration of the setting or a stop command from the CPU Module Logging Configuration Tool.	S (Error)	New	QnUDV QnUDPV LCPU
SM1947	Data logging setting No.1 Data storage in SD memory card	OFF: Not stored ON: Being stored	This relay is on while buffer memory data are being stored to a SD memory card by data logging.	S (Status change)	New	QnUDV QnUDPV LCPU
SM1948	Data logging setting No.1 Data logging file transfer execution status flag	OFF: Not executed ON: Being executed	• This relay turns on when the data logging file transfer function is started. • This relay turns off when the data logging file transfer function is stopped.	S (Status change)	New	QnUDV QnUDPV LCPU*1

Number	Name	Meaning	Explanation	Set by (When Set)	Corresponding ACPU M9□□□	Corresponding CPU
SM1950 to SM1958	Data logging setting No.2	Same as in data logging setting No.1	Same as in data logging setting No.1 (SM1940 to SM1948)	Same as in data logging setting No.1	New	QnUDV QnUDPV LCPU*1
SM1960 to SM1968	Data logging setting No.3					
SM1970 to SM1978	Data logging setting No.4					
SM1980 to SM1988	Data logging setting No.5					
SM1990 to SM1998	Data logging setting No.6					
SM2000 to SM2008	Data logging setting No.7					
SM2010 to SM2018	Data logging setting No.8					
SM2020 to SM2028	Data logging setting No.9					
SM2030 to SM2038	Data logging setting No.10					

*1 For the data logging file transfer execution status flag, modules whose serial number (first five digits) is "12112" or later support these areas.

*2 Modules whose serial number (first five digits) is "17103" or later

*3 The LCPU, except the L02SCPU and L02SCPU-P, whose serial number (first five digits) is "17102" or later

Appendix 3 List of Special Register Areas

The special register (SD) is an internal register whose application is fixed in the programmable controller. For this reason, the special register cannot be used in the same way as other internal registers are used in sequence programs. However, data can be written to the special register to control the CPU module as needed. Data is stored in binary format if not specified.

The following table shows how to read the special register list.

Item	Description
Number	Special register number
Name	Special register name
Meaning	Contents of special register
Explanation	Detailed description of special register
Set by (When Set)	Set side and set timing of special register <Set by> • S: Set by system • U: Set by user (using a program, programming tool, GOT, or test operation from other external devices) • S/U: Set by both system and user <When Set> The following shows the set timing when the special register is set by system. • Every END processing: Set during every END processing • Initial: Set during initial processing (after power-on or status change from STOP to RUN) • Status change: Set when the operating status is changed • Error: Set if an error occurs • Instruction execution: Set when an instruction is executed • Request: Set when requested by a user (using the special relay) • When condition occurs: Set when the condition is triggered • When system is switched: Set when the system is switched (between the control system and the standby system) • When RUN/STOP/RESET switch changed: Set when the RUN/STOP/RESET switch is changed • Card removal: Set when a memory card is inserted or removed • At write: Set when data are written to the CPU module by a user • During END processing: Set during END processing
Corresponding CPU	CPU module supporting the special register • QCPU: All the Q series CPU modules • Q00J/Q00/Q01: Basic model QCPU • Qn(H): High Performance model QCPU • QnPH: Process CPU • QnPRH: Redundant CPU • QnU: Universal model QCPU • QnUDV: High-speed Universal model QCPU • QnUDPV: Universal model Process CPU • Q00UJ/Q00U/Q01U: Q00UJCPU, Q00UCPU, and Q01UCPU • LCPU: All the L series CPU modules • CPU module model: Only the specified model (Example: Q02UCPU, L26CPU-BT)
Corresponding ACPU D9□□□	• Special register (D9□□□) supported by the ACPU ("D9□□□ format change" indicates the one whose application has been changed. Incompatible with the Q00J/Q00/Q01 and QnPRH.) • "New" indicates the one added for the QCPU or LCPU.

For details on the following items, refer to the following.

- For network related items: 📖 Manuals for each network module
- For SFC programs: 📖 MELSEC-Q/L/QnA Programming Manual (SFC)

Point

Do not change the values of special register set by system using a program or by test operation. Doing so may result in system down or communication failure.

(1) Diagnostic information

Number	Name	Meaning	Explanation	Set by (When Set)	Corresponding ACPU D9□□□	Corresponding CPU
SD0	Diagnostic errors	Diagnosis error code	• This register stores the error code of an error detected by diagnostics. • Contents identical to latest error history information.	S (Error)	D9008 format change	QCPU LCPU
SD1	Clock time for diagnosis error occurrence	Clock time for diagnosis error occurrence	This register stores the year (last two digits) and the month when the SD0 data is updated in 4-digit BCD. b15 to b8 b7 to b0 Year (0 to 99) | Month (1 to 12) (Example) October, 1995 9510H	S (Error)	New	QCPU LCPU
SD2			This register stores the day and the hour when the SD0 data is updated in 4-digit BCD. b15 to b8 b7 to b0 Day (1 to 31) | Hour (0 to 23) (Example) 10 a.m. on 25th 2510H			
SD3			This register stores the minute and the second when the SD0 data is updated in 4-digit BCD. b15 to b8 b7 to b0 Minutes (0 to 59) | Seconds (0 to 59) (Example) 35 min. 48 sec. 3548H			

Number	Name	Meaning	Explanation	Set by (When Set)	Corresponding ACPU D9□□□	Corresponding CPU
SD4	Error information categories	Error information category code	• This register stores a category code indicating a type of the error information which is stored in the common information (SD5 to SD15) and the individual information (SD16 to SD26). 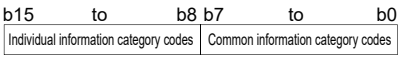 • The common information category codes store the following codes: 0: No error 1: Module No. (QCPU: Slot No./CPU No./base No., LCPU: Slot No./Block No.)*1 2: File name/drive name 3: Time (value set) 4: Program error location 5: Reason(s) for system switching (for the Redundant CPU) 6: Reason(s) for tracking size excess error (for the Redundant CPU) 7: Base No./power supply No. (This does not apply to the Universal model QCPU and the LCPU with a serial number (first five digits) of "10041" or earlier.) 8: Tracking transmission data classification (for the Redundant CPU) *1 For a multiple CPU system, the module No. or CPU No. (CPU No.1: 1, CPU No.2: 2, CPU No.3: 3, CPU No.4: 4) is stored according to an error. (For details, refer to each error code.) • The individual information category codes store the following codes: 0: No error 1: (Empty) 2: File name/drive name 3: Time (value actually measured) 4: Program error location 5: Parameter number 6: Annunciator (F) No. 7: CHK instruction failure No. (Except for the Basic model QCPU, Universal model QCPU, and LCPU.) 8: Reason(s) for system switching failure (for the Redundant CPU) 9: Failure information (for the QnUDVCPU, QnUDPVCPU, and LCPU) 12: File diagnostic information (for the Universal model QCPU and the LCPU) 13: Parameter No./CPU No. (for the Universal model QCPU)	S (Error)	New	QCPU LCPU

<table>
<tr><th>Number</th><th>Name</th><th>Meaning</th><th>Explanation</th><th>Set by (When Set)</th><th>Corresponding ACPU D9□□□</th><th>Corresponding CPU</th></tr>
<tr><td>SD5 to SD15</td><td>Error common information</td><td>Error common information</td><td>
• This register stores common information corresponding to the error code stored in SD0.
• The following ten types of information are stored here:
• The error common information type can be determined by "common information category code" stored in SD4. (Values stored in "common information category code" correspond to the following 1) to 8).)
1) Module No.
<table>
<tr><th>Number</th><th>Meaning</th></tr>
<tr><td>SD5</td><td>Slot No./CPU No./Base No./Block No. *1, *2, *3, *4, *5</td></tr>
<tr><td>SD6</td><td>I/O No. *6, *11</td></tr>
<tr><td>SD7</td><td rowspan="9">(Empty)</td></tr>
<tr><td>SD8</td></tr>
<tr><td>SD9</td></tr>
<tr><td>SD10</td></tr>
<tr><td>SD11</td></tr>
<tr><td>SD12</td></tr>
<tr><td>SD13</td></tr>
<tr><td>SD14</td></tr>
<tr><td>SD15</td></tr>
</table>
*1 For a multiple CPU system, the module No. or CPU No. (CPU No.1: 1, CPU No.2: 2, CPU No.3: 3, CPU No.4: 4) is stored according to an error. (For details, refer to each error code.)
*2 If a fuse has been blown or an I/O module verify error occurs in a module on the MELSECNET/H remote I/O station, the network No. is stored in the upper 8 bits and the station No. is stored in the lower 8 bits. To determine a fuse-blown module or a module where an I/O module verify error occurs, check the I/O No.
*3 If an instruction is executed from the Basic model QCPU to a module mounted on the slot where no module should be mounted, "255" is stored in SD5.
*4 The definitions of the base No., slot No., and block No. are as follows:
[Base No.]
This number indicates a base unit on which the CPU module is mounted.
<table>
<tr><th>Base No.</th><th>Definition</th></tr>
<tr><td>0</td><td>Indicates the main base unit where a CPU module is mounted.</td></tr>
<tr><td>1 to 7</td><td>Indicates the extension base unit. The stage number setting made by the stage number setting connector on the extension base unit is the base No.
When stage number setting is extension 1: Base No. = 1
When stage number setting is extension 7: Base No. = 7</td></tr>
</table>
[Slot No.]
This number is used to identify the slot of each base unit and a module mounted on the slot.
The "0" I/O slot (slot on the right of the CPU slot) on the main base unit is defined as "Slot No. = 0". The slot Nos. are assigned in sequence numbers in order of the main base unit and then the first extension base unit to 7th extension base unit. When the number of slots on base units has been set in the I/O Assignment tab of "PLC Parameter", the slot Nos. are assigned by the number of set slots.
[Block No.]
<table>
<tr><th>Block No.</th><th>Definition</th></tr>
<tr><td>0</td><td>Indicates the number of main block where a CPU module is mounted.</td></tr>
<tr><td>1 to 3</td><td>Indicates the main block where a CPU module is mounted.
Extension block 1: Block No. = 1
Extension block 2: Block No. = 2
Extension block 3: Block No. = 3</td></tr>
</table>
</td><td>S (Error)</td><td>New</td><td>QCPU
LCPU</td></tr>
</table>

<table>
<tr><th>Number</th><th>Name</th><th>Meaning</th><th>Explanation</th><th>Set by (When Set)</th><th>Corresponding ACPU D9□□□</th><th>Corresponding CPU</th></tr>
<tr><td>SD5 to SD15</td><td>Error common information</td><td>Error common information</td><td>
*5 If a module is not mounted on any slots as set, FF_H is stored.
*6 If $FFFF_H$ is stored in SD6 (I/O No.), this indicates that the I/O No. cannot be identified due to an error such as overlap of an I/O No. in the I/O Assignment tab of "PLC Parameter". In this case, identify the error location using SD5. $FFFF_H$ is also stored in SD6 for the branch module.
*11 The number found by dividing the start I/O number by 16 is stored.
2) File name/drive name
<table>
<tr><th>Number</th><th colspan="2">Meaning</th></tr>
<tr><td>SD5</td><td colspan="2">Drive</td></tr>
<tr><td>SD6</td><td colspan="2" rowspan="4">File name
(ASCII code: 8 characters)</td></tr>
<tr><td>SD7</td></tr>
<tr><td>SD8</td></tr>
<tr><td>SD9</td></tr>
<tr><td>SD10</td><td>Extension *7</td><td>2EH(.)</td></tr>
<tr><td>SD11</td><td colspan="2">(ASCII code: 3 characters)</td></tr>
<tr><td>SD12</td><td colspan="2" rowspan="4">(Empty)</td></tr>
<tr><td>SD13</td></tr>
<tr><td>SD14</td></tr>
<tr><td>SD15</td></tr>
</table>
(Example) File name = ABCDEFGH. IJK
b15 to b8 b7 to b0
<table>
<tr><td>42H(B)</td><td>41H(A)</td></tr>
<tr><td>44H(D)</td><td>43H(C)</td></tr>
<tr><td>46H(F)</td><td>45H(E)</td></tr>
<tr><td>48H(H)</td><td>47H(G)</td></tr>
<tr><td>49H(I)</td><td>2EH(.)</td></tr>
<tr><td>4BH(K)</td><td>4AH(J)</td></tr>
</table>
3) Time (value set)
<table>
<tr><th>Number</th><th>Meaning</th></tr>
<tr><td>SD5</td><td>Time : 1μs units (0 to 999μs)</td></tr>
<tr><td>SD6</td><td>Time : 1ms units (0 to 65535ms)</td></tr>
<tr><td>SD7</td><td rowspan="9">(Empty)</td></tr>
<tr><td>SD8</td></tr>
<tr><td>SD9</td></tr>
<tr><td>SD10</td></tr>
<tr><td>SD11</td></tr>
<tr><td>SD12</td></tr>
<tr><td>SD13</td></tr>
<tr><td>SD14</td></tr>
<tr><td>SD15</td></tr>
</table>
4) Program error location
<table>
<tr><th>Number</th><th colspan="2">Meaning</th></tr>
<tr><td>SD5</td><td colspan="2" rowspan="4">File name
(ASCII code: 8 characters)</td></tr>
<tr><td>SD6</td></tr>
<tr><td>SD7</td></tr>
<tr><td>SD8</td></tr>
<tr><td>SD9</td><td>Extension *7</td><td>2EH(.)</td></tr>
<tr><td>SD10</td><td colspan="2">(ASCII code: 3 characters)</td></tr>
<tr><td>SD11</td><td colspan="2">Pattern *8</td></tr>
<tr><td>SD12</td><td colspan="2">Block No.</td></tr>
<tr><td>SD13</td><td colspan="2">Step No./transition condition</td></tr>
<tr><td>SD14</td><td colspan="2">Sequence step No. (L)</td></tr>
<tr><td>SD15</td><td colspan="2">Sequence step No. (H)</td></tr>
</table>
*7 For extension names, refer to the table on Page 532, Appendix 3 (1) (a).
*8 The description of the bit pattern is as follows:
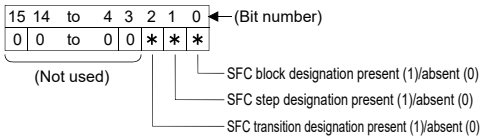

</td><td>S (Error)</td><td>New</td><td>QCPU
LCPU</td></tr>
</table>

(a) Extension name

SD_n	SD_{n+1}		Extension	File type
Upper 8 bits	Lower 8 bits	Upper 8 bits		
51_H	50_H	41_H	QPA	Parameter
51_H	50_H	47_H	QPG	Program
51_H	43_H	44_H	QCD	Device comment
51_H	44_H	49_H	QDI	Initial device value
51_H	44_H	52_H	QDR	File register
51_H	44_H	$4C_H$	QDL	Local device (for the High Performance model QCPU, Process CPU, Redundant CPU, Universal model QCPU, and LCPU)
51_H	54_H	44_H	QTD	Sampling trace data (for the High Performance model QCPU, Process CPU, Redundant CPU, Universal model QCPU, and LCPU)
51_H	46_H	44_H	QFD	Error history data (for the High Performance model QCPU, Process CPU, and Redundant CPU)
51_H	53_H	54_H	QST	SP.DEVST/S.DEVLD instruction file (for the Universal model QCPU and the LCPU)
51_H	$4F_H$	$4C_H$	QOL	Operation history file (for the High-speed Universal model QCPU and Universal model Process CPU)

Number	Name	Meaning	Explanation	Set by (When Set)	Corresponding ACPU D9□□□	Corresponding CPU
SD5 to SD15	Error common information	Error common information	5) Reason(s) for system switching Number / Meaning SD5: System switching cause *9 SD6: Control system switching instruction argument SD7 to SD15: (Empty) *9 The following shows the description. 0 : No system switching condition (default) 1 : Power-OFF, reset, hardware failure, watchdog timer error 2 : Stop error (except watchdog timer error) 3 : System switching request by network module 16 : Control system switching instruction 17 : Control system switching request from a programming tool 6) Reason(s) for tracking size excess error The following shows block Nos. when data size that can be tracked (100K) is exceeded in the bit pattern of the corresponding special relay. SD5: b15 1 (SM1535) (Block16); b14 0; b13 0; b12 0; b11 0; b10 0; b9 0; b8 1 (SM1528) (Block9); b7 0; b6 0; b5 0; b4 0; b3 0; b2 0; b1 0; b0 1 (SM1520) (Block1) SD6: 0 0 0 0 0 0 0 0 0 0 0 0 0 0 0 0 SD7: 0 0 0 0 0 0 0 0 0 0 0 0 0 0 0 0 SD8: 1 (SM1583) (Block64); 0 0 0 0 0 0 0; 0 0 0 0 0 0 0; 1 (SM1568) (Block49) SD9: 0 0 0 0 0 0 0 0 0 0 0 0 0 0 0 0 SD15: 0 0 0 0 0 0 0 0 0 0 0 0 0 0 0 0	S (Error)	New	QnPRH

<table>
<tr><th>Number</th><th>Name</th><th>Meaning</th><th>Explanation</th><th>Set by (When Set)</th><th>Corresponding ACPU D9□□□</th><th>Corresponding CPU</th></tr>
<tr><td rowspan="2">SD5 to SD15</td><td rowspan="2">Error common information</td><td rowspan="2">Error common information</td><td>7) Base No./power supply No.
<table><tr><th>Number</th><th>Meaning</th></tr><tr><td>SD5</td><td>Base No.</td></tr><tr><td>SD6</td><td>Power supply No.</td></tr><tr><td>SD7</td><td rowspan="9">(Empty)</td></tr><tr><td>SD8</td></tr><tr><td>SD9</td></tr><tr><td>SD10</td></tr><tr><td>SD11</td></tr><tr><td>SD12</td></tr><tr><td>SD13</td></tr><tr><td>SD14</td></tr><tr><td>SD15</td></tr></table>1: Power supply 1 fault
2: Power supply 2 fault
"Power supply module 1": Redundant power supply module mounted on POWER 1 slot of redundant base unit (Q38RB, Q68RB, Q65WRB)
"Power supply module 2": Redundant power supply module mounted on POWER 2 slot of redundant base unit (Q38RB, Q68RB, Q65WRB)</td><td rowspan="2">S (Error)</td><td rowspan="2">New</td><td>Qn(H)*1
QnPH*1
QnPRH
QnU*2</td></tr>
<tr><td>8) Tracking transmission data classification
This register stores a data type during tracking.
<table><tr><th>Number</th><th>Meaning</th></tr><tr><td>SD5</td><td>Data type *10</td></tr><tr><td>SD6</td><td rowspan="9">(Empty)</td></tr><tr><td>SD7</td></tr><tr><td>SD8</td></tr><tr><td>SD9</td></tr><tr><td>SD10</td></tr><tr><td>SD11</td></tr><tr><td>SD12</td></tr><tr><td>SD13</td></tr><tr><td>SD14</td></tr><tr><td>SD15</td></tr></table>*10 The description of the data type is as follows:
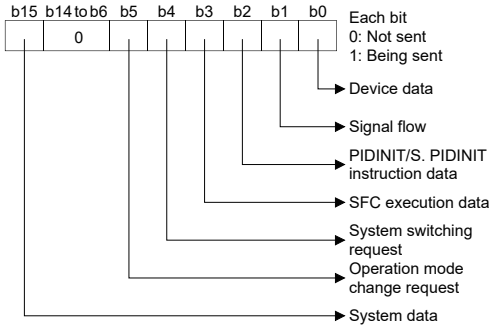
</td><td>QnPRH</td></tr>
</table>

<table>
<tr><th>Number</th><th>Name</th><th>Meaning</th><th>Explanation</th><th>Set by (When Set)</th><th>Corresponding ACPU D9□□□</th><th>Corresponding CPU</th></tr>
<tr><td>SD16 to SD26</td><td>Error individual information</td><td>Error individual information</td><td>
• This register stores individual information corresponding to the error code stored in SD0.
• There are the following eight different types of information are stored.
• The error individual information type can be determined by "individual information category code" stored in SD4. (Values stored in "individual information category code" correspond to the following 1) to 9), 12), and 13).)
1) (Empty)
2) File name/drive name
<table>
<tr><th>Number</th><th colspan="2">Meaning</th></tr>
<tr><td>SD16</td><td colspan="2">Drive</td></tr>
<tr><td>SD17</td><td colspan="2" rowspan="5">File name
(ASCII code: 8 characters)</td></tr>
<tr><td>SD18</td></tr>
<tr><td>SD19</td></tr>
<tr><td>SD20</td></tr>
<tr><td>SD21</td><td>Extension *6</td><td>2EH(.)</td></tr>
<tr><td>SD22</td><td colspan="2">(ASCII code: 3 characters)</td></tr>
<tr><td>SD23</td><td colspan="2" rowspan="4">(Empty)</td></tr>
<tr><td>SD24</td></tr>
<tr><td>SD25</td></tr>
<tr><td>SD26</td></tr>
</table>
(Example) File name = ABCDEFGH. IJK
<table>
<tr><th>b15 to b8</th><th>b7 to b0</th></tr>
<tr><td>42H(B)</td><td>41H(A)</td></tr>
<tr><td>44H(D)</td><td>43H(C)</td></tr>
<tr><td>46H(F)</td><td>45H(E)</td></tr>
<tr><td>48H(H)</td><td>47H(G)</td></tr>
<tr><td>49H(I)</td><td>2EH(.)</td></tr>
<tr><td>4BH(K)</td><td>4AH(J)</td></tr>
</table>
3) Time (value actually measured)
<table>
<tr><th>Number</th><th>Meaning</th></tr>
<tr><td>SD16</td><td>Time : 1μs units (0 to 999μs)</td></tr>
<tr><td>SD17</td><td>Time : 1ms units (0 to 65535ms)</td></tr>
<tr><td>SD18</td><td rowspan="9">(Empty)</td></tr>
<tr><td>SD19</td></tr>
<tr><td>SD20</td></tr>
<tr><td>SD21</td></tr>
<tr><td>SD22</td></tr>
<tr><td>SD23</td></tr>
<tr><td>SD24</td></tr>
<tr><td>SD25</td></tr>
<tr><td>SD26</td></tr>
</table>
4) Program error location
<table>
<tr><th>Number</th><th colspan="2">Meaning</th></tr>
<tr><td>SD16</td><td colspan="2" rowspan="4">File name
(ASCII code: 8 characters)</td></tr>
<tr><td>SD17</td></tr>
<tr><td>SD18</td></tr>
<tr><td>SD19</td></tr>
<tr><td>SD20</td><td>Extension *6</td><td>2EH(.)</td></tr>
<tr><td>SD21</td><td colspan="2">(ASCII code: 3 characters)</td></tr>
<tr><td>SD22</td><td colspan="2">Pattern *7</td></tr>
<tr><td>SD23</td><td colspan="2">Block No.</td></tr>
<tr><td>SD24</td><td colspan="2">Step No./transition No.</td></tr>
<tr><td>SD25</td><td colspan="2">Sequence step No. (L)</td></tr>
<tr><td>SD26</td><td colspan="2">Sequence step No. (H)</td></tr>
</table>
*6 For extension names, refer to the table on Page 532, Appendix 3 (1) (a).
*7 The description of the bit pattern is as follows:
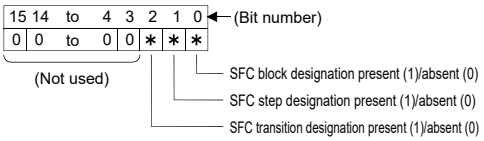

</td><td>S (Error)</td><td>New</td><td>QCPU
LCPU</td></tr>
</table>

<table>
<tr><th>Number</th><th>Name</th><th>Meaning</th><th>Explanation</th><th>Set by (When Set)</th><th>Corresponding ACPU D9□□□</th><th>Corresponding CPU</th></tr>
<tr><td rowspan="2">SD16 to SD26</td><td rowspan="2">Error individual information</td><td rowspan="2">Error individual information</td><td>5) Parameter No. 6) Annunciator number / 7) CHK instruction malfunction number
<table><tr><th>Number</th><th>Meaning</th></tr><tr><td>SD16</td><td>Parameter No. *8</td></tr><tr><td>SD17</td><td rowspan="10">(Empty)</td></tr><tr><td>SD18</td></tr><tr><td>SD19</td></tr><tr><td>SD20</td></tr><tr><td>SD21</td></tr><tr><td>SD22</td></tr><tr><td>SD23</td></tr><tr><td>SD24</td></tr><tr><td>SD25</td></tr><tr><td>SD26</td></tr></table><table><tr><th>Number</th><th>Meaning</th></tr><tr><td>SD16</td><td>No.</td></tr><tr><td>SD17</td><td rowspan="10">(Empty)</td></tr><tr><td>SD18</td></tr><tr><td>SD19</td></tr><tr><td>SD20</td></tr><tr><td>SD21</td></tr><tr><td>SD22</td></tr><tr><td>SD23</td></tr><tr><td>SD24</td></tr><tr><td>SD25</td></tr><tr><td>SD26</td></tr></table>*8 For details on the parameter No., refer to the following:
User's Manual (Function Explanation, Program Fundamentals) for the CPU module used</td><td rowspan="2">S (Error)</td><td rowspan="2">New</td><td>QCPU
LCPU</td></tr>
<tr><td>8) Reason(s) for system switching failure
<table><tr><th>Number</th><th>Meaning</th></tr><tr><td>SD16</td><td>System switching prohibition condition *9</td></tr><tr><td>SD17</td><td rowspan="10">(Empty)</td></tr><tr><td>SD18</td></tr><tr><td>SD19</td></tr><tr><td>SD20</td></tr><tr><td>SD21</td></tr><tr><td>SD22</td></tr><tr><td>SD23</td></tr><tr><td>SD24</td></tr><tr><td>SD25</td></tr><tr><td>SD26</td></tr></table>*9 The following shows the description.
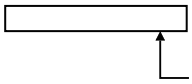
0 : Normal switching completion (default)
1 : Tracking cable fault (cable removal, cable fault, internal circuit fault, hardware fault)
2 : Hardware failure, power OFF, reset or watchdog timer error occurring in standby system
3 : Hardware failure, power OFF, reset or watchdog timer error occurring in control system
4 : Preparing for tracking
5 : Time limit exceeded
6 : Standby system is in stop error (except watchdog timer error)
7 : Operation differs between two systems (in backup mode only)
8 : During memory copy from control system to standby system
9 : Online program change
10 : Error detected by network module of standby system
11 : System switching being executed
12 : Online module change in progress</td><td>QnPRH</td></tr>
</table>

<table>
<tr><th>Number</th><th>Name</th><th>Meaning</th><th>Explanation</th><th>Set by (When Set)</th><th>Corresponding ACPU D9□□□</th><th>Corresponding CPU</th></tr>
<tr><td rowspan="3">SD16 to SD26</td><td rowspan="3">Error individual information</td><td rowspan="3">Error individual information</td><td>9) Failure information
<table><tr><th>Number</th><th>Meaning</th></tr><tr><td>SD16</td><td>Failure information 1</td></tr><tr><td>SD17</td><td>Failure information 2</td></tr><tr><td>SD18</td><td>Failure information 3</td></tr><tr><td>SD19</td><td>Failure information 4</td></tr><tr><td>SD20</td><td>Failure information 5</td></tr><tr><td>SD21</td><td>Failure information 6</td></tr><tr><td>SD22</td><td>Failure information 7</td></tr><tr><td>SD23</td><td>Failure information 8</td></tr><tr><td>SD24</td><td>Failure information 9</td></tr><tr><td>SD25</td><td>Failure information 10</td></tr><tr><td>SD26</td><td>Failure information 11</td></tr></table></td><td>S (Error)</td><td rowspan="3">New</td><td>QnUDV
QnUDPV
LCPU</td></tr>
<tr><td>12) File diagnostic information
<table><tr><th>Number</th><th>Meaning</th></tr><tr><td>SD16</td><td>Failure information 1 (H) | drive No. (L)</td></tr><tr><td>SD17
SD18
SD19
SD20</td><td>File name
(ASCII: 8 characters)</td></tr><tr><td>SD21
SD22</td><td>Extension*6 | 2EH(.)
(ASCII: 3 characters)</td></tr><tr><td>SD23
SD24</td><td>Failure information 2
(CRC value that is read)</td></tr><tr><td>SD25
SD26</td><td>Failure information 3
(CRC value that is calculated)</td></tr></table>*6 For extension names, refer to the table on Page 532, Appendix 3 (1) (a).</td><td rowspan="2">S (Error)</td><td>QnU
LCPU</td></tr>
<tr><td>13) Parameter No./CPU No.
<table><tr><th>Number</th><th>Meaning</th></tr><tr><td>SD16</td><td>Parameter No.*16</td></tr><tr><td>SD17</td><td>CPU No. (1 to 4)</td></tr><tr><td>SD18
SD19
SD20
SD21
SD22
SD23
SD24
SD25
SD26</td><td>(Empty)</td></tr></table>*16 For details on the parameter No., refer to the following: 📖 User's Manual (Function Explanation, Program Fundamentals) for the CPU module used</td><td>QnU</td></tr>
<tr><td>SD50</td><td>Error reset</td><td>Error number that performs error reset</td><td>This register stores the error code where the error reset is performed.</td><td>U</td><td>New</td><td>QCPU
LCPU</td></tr>
<tr><td>SD51</td><td>Battery low latch</td><td>Bit pattern indicating where battery voltage drop occurred</td><td>• If a battery voltage drops, the corresponding bit stores "1" (turns on).
• This register remains on even after the battery voltage returns to normal.
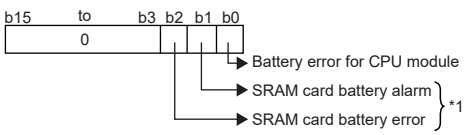
*1 These bits are not available for the Basic model QCPU, High-speed Universal model QCPU, Universal model Process CPU, and LCPU. If an alarm occurs, data can be held within the time specified for battery low. The error indicates full discharge of a battery.</td><td>S (Error)</td><td>New</td><td>QCPU
LCPU</td></tr>
</table>

Number	Name	Meaning	Explanation	Set by (When Set)	Corresponding ACPU D9□□□	Corresponding CPU
SD52	Battery low	Bit pattern indicating where battery voltage drop occurred	• This register has the same bit pattern as that of SD51. • After an alarm is detected (the alarm bit turns on), the alarm bit turns off if an error is detected (the error bit turns on). (Universal model QCPU only, except the QnUDVCPU and QnUDPVCPU) • This register stores "0" (turns off) when the battery voltage returns to normal.	S (Error)	New	QCPU LCPU
SD53	AC/DC DOWN detection	Number of times for AC/DC DOWN detection	• A value stored in this register is incremented by 1 whenever the input voltage falls to or below 85% (AC power)/65% (DC power) of the rating during operation of the CPU module. • The counter repeats increment and decrement of the value; 0 → 32767 → -32768 → 0	S (Error)	D9005	QCPU LCPU
SD60	Number of module with blown fuse	Number of module with blown fuse	This register stores the lowest I/O number of the module with a blown fuse.	S (Error)	D9000	QCPU LCPU*9
SD61	I/O module verify error number	I/O module verify error module number	This register stores the lowest I/O number of the module where the I/O module verify error has occurred.	S (Error)	D9002	QCPU LCPU
SD62	Annunciator number	Annunciator number	This register stores the number of the annunciator (F number) detected first.	S (Instruction execution)	D9009	QCPU LCPU
SD63	Number of annunciators	Number of annunciators	This register stores the number of detected annunciators.	S (Instruction execution)	D9124	QCPU LCPU
SD64	Table of detected annunciator numbers	Annunciator detection number	When an annunciator (F) is turned on by the OUT F or SET F instruction, the F numbers are stored from SD64 to SD79 in chronological order. The number of an annunciator (F) turned off by the RST F instruction is deleted from SD64 to SD79, and F numbers stored later than the register where the deleted F number was stored are shifted upward. When the LEDR instruction is executed, the contents of SD64 to SD79 are shifted upward by 1. After 16 annunciators have been detected, detection of the 17th will not be stored from SD64 through SD79. 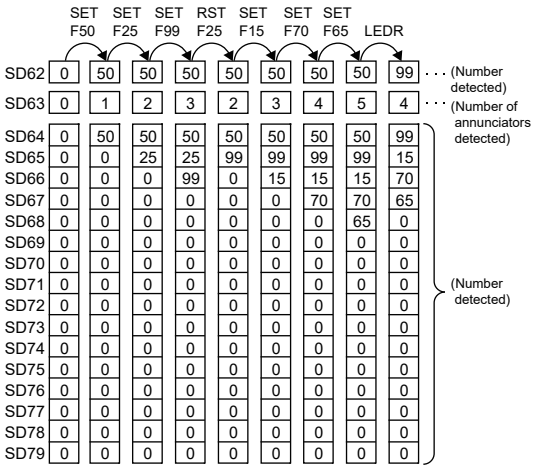	S (Instruction execution)	D9125 D9126 D9127 D9128 D9129 D9130 D9131 D9132 New	QCPU LCPU
SD65						
SD66						
SD67						
SD68						
SD69						
SD70						
SD71						
SD72						
SD73						
SD74						
SD75						
SD76						
SD77						
SD78						
SD79						
SD80	CHK number	CHK number	Error codes detected by the CHK instruction are stored as BCD code.	S (Instruction execution)	New	Qn(H) QnPH QnPRH

<table>
<tr><th>Number</th><th>Name</th><th>Meaning</th><th colspan="2">Explanation</th><th>Set by (When Set)</th><th>Corresponding ACPU D9□□□</th><th>Corresponding CPU</th></tr>
<tr><td>SD81</td><td>Continuation error cause</td><td>Continuation error cause</td><td colspan="2">This register stores a continuation error cause.
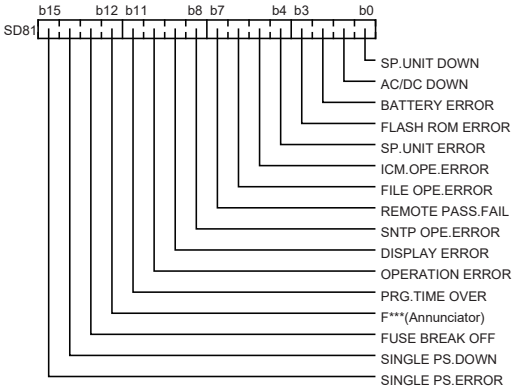

• QnUDVCPU and QnUDPVCPU: The b9 is fixed to 0.
• LCPU: The b14 and b15 are fixed to 0.</td><td>S (Error)</td><td>New</td><td>QnUDV
QnUDPV
LCPU</td></tr>
<tr><td rowspan="2">SD82</td><td rowspan="2">Continuation error cause</td><td rowspan="2">Continuation error cause</td><td colspan="2">This register stores a continuation error cause.
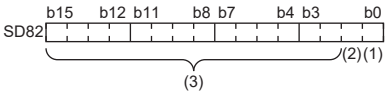

(1)UNIT VERIFY ERR.
(2)MULTI CPU ERROR
(3)Fixed to 0
• LCPU: All bits are fixed to 0.</td><td rowspan="2">S (Error)</td><td rowspan="2">New</td><td>QnUDV*10
QnUDPV*10
LCPU*10</td></tr>
<tr><td colspan="2">This register stores a continuation error cause.
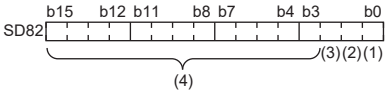

(1)UNIT VERIFY ERR.
(2)MULTI CPU ERROR
(3)PID ERROR
(4)Fixed to 0
• LCPU: The b0 and b1 are fixed to 0.</td><td>QnUDV*9
QnUDPV*9
LCPU*9</td></tr>
<tr><td>SD84</td><td rowspan="2">Continuation error clear</td><td rowspan="2">Continuation error clear</td><td colspan="2" rowspan="2">This register stores a continuation error to be cleared in bit pattern.
For the LCPU, all bits are empty.</td><td rowspan="2">U</td><td rowspan="2">New</td><td rowspan="2">QnUDV
QnUDPV
LCPU</td></tr>
<tr><td>SD85</td></tr>
<tr><td>SD90</td><td rowspan="10">Step transition monitoring timer setting value (Enabled only when SFC program exists)</td><td rowspan="10">F number for timer set value and time over error</td><td>Corresponds to SM90</td><td rowspan="10">• This register stores a value set for step transition monitoring timer and the number of an annunciator (F) that turns on if the monitoring timer times out.
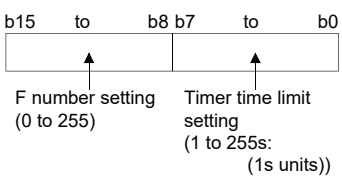

• Turning on any of SM90 to SM99 while a step is running will start the timer, and if the transition condition for the step next to the active step is not met within the timer limit, the set annunciator (F) turns on.</td><td rowspan="10">U</td><td>D9108</td><td rowspan="10">Qn(H)
QnPH
QnPRH</td></tr>
<tr><td>SD91</td><td>Corresponds to SM91</td><td>D9109</td></tr>
<tr><td>SD92</td><td>Corresponds to SM92</td><td>D9110</td></tr>
<tr><td>SD93</td><td>Corresponds to SM93</td><td>D9111</td></tr>
<tr><td>SD94</td><td>Corresponds to SM94</td><td>D9112</td></tr>
<tr><td>SD95</td><td>Corresponds to SM95</td><td>D9113</td></tr>
<tr><td>SD96</td><td>Corresponds to SM96</td><td>D9114</td></tr>
<tr><td>SD97</td><td>Corresponds to SM97</td><td rowspan="3">New</td></tr>
<tr><td>SD98</td><td>Corresponds to SM98</td></tr>
<tr><td>SD99</td><td>Corresponds to SM99</td></tr>
</table>

Number	Name	Meaning	Explanation	Set by (When Set)	Corresponding ACPU D9□□□	Corresponding CPU
SD100	Transmission speed storage area	Transmission speed set in parameter	This register stores the transmission speed set in parameter when the serial communication function is used. 12: 1200bps, 24: 2400bps, 48: 4800bps, 96: 9600bps, 192: 19200bps, 384: 38400bps, 576: 57600bps, 1152: 115200bps	S (Power-ON or reset)	New	Q00/Q01 QnU*4 LCPU*7
SD101	Communication setting storage area	Communication setting set in parameter	This register stores the communication setting set in parameter when the serial communication function is used. 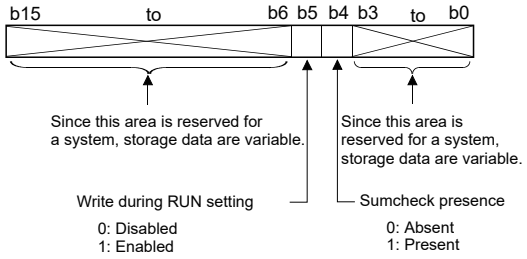 	S (Power-ON or reset)	New	Q00/Q01 QnU*4 LCPU*7
SD102	Transmission wait time storage area	Transmission wait time set in parameter	This register stores the transmission wait time set in parameter when the serial communication function is used. 0: No waiting time 10 to 150: Waiting time (unit: ms) Default: 0	S (Power-ON or reset)	New	Q00/Q01 QnU*4 LCPU*7
SD105	CH1 transmission speed setting (RS-232)	Transmission speed (RS-232)	This register stores a transmission speed. (If no external device is connected, the default value, 1152, is stored.) 96: 9600bps, 192: 19200bps, 384: 38400bps, 576: 57600bps, 1152: 115200bps	S	New	Qn(H) QnPH QnPRH
			This register stores a transmission speed. (If no external device is connected, the default value, 1152, is stored.) This register stores a transmission speed set in parameter when the serial communication function is used*8. 96: 9600bps, 192: 19200bps, 384: 38400bps, 576: 57600bps, 1152: 115200bps	S	New	QnU*3
			This register stores a transmission speed. (When the L02SCPU, L02SCPU-P, or RS-232 adapter is used, the default value, 1152, is stored.) This register stores a transmission speed set in parameter when the serial communication function is used. 96: 9600bps, 192: 19200bps, 384: 38400bps, 576: 57600bps, 1152: 115200bps	S	New	LCPU
SD110	Data sending result storage area	Data sending result	This register stores the error code if an error occurs during data transmission when the serial communication function is used.	S (Error)	New	Q00/Q01 QnU*4 LCPU*7
SD111	Data receiving result storage area	Data receiving result	This register stores the error code if an error occurs during data reception when the serial communication function is used.	S (Error)	New	Q00/Q01 QnU*4 LCPU*7
SD118	Amount of battery consumption	Amount of battery consumption	This register stores a battery consumption rate. [Value range] • 1 or 2: Q00UJCPU, Q00UCPU, Q01UCPU, Q02UCPU, Q03UD(E)CPU, Q04UD(E)HCPU, L02SCPU, L02SCPU-P, L02CPU, L02CPU-P • 1 to 3: Q06UD(E)HCPU, L06CPU, L06CPU-P, L26CPU, L26CPU-P, L26CPU-BT, L26CPU-PBT • 1 to 4: Q10UD(E)HCPU, Q20UD(E)HCPU, Q13UD(E)HCPU, Q26UD(E)HCPU • 1 to 5: Q50UDEHCPU, Q100UDEHCPU	S (Status change)	New	QnU (except the QnUDV and QnUDPV) LCPU

Number	Name	Meaning	Explanation	Set by (When Set)	Corresponding ACPU D9□□□	Corresponding CPU
SD119	Battery life-prolonging factor	Battery life-prolonging factor	This register stores a value indicating a cause that has the battery life-prolonging function enabled. While this register is other than "0", the battery life-prolonging function is enabled. 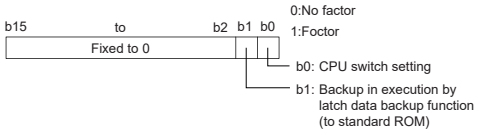	S (Status change)	New	QnU (except the QnUDV and QnUDPV) LCPU
SD130 to SD137	Fuse blown module	Bit pattern in units of 16 points, indicating the modules whose fuses have blown 0: No blown fuse 1: Blown fuse present	• This register stores the number of a fuse-blown output module (in units of 16 points) in the following bit pattern. (If the module numbers are set by parameter, the parameter-set numbers are stored.) 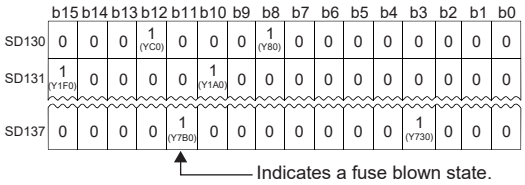 For a module whose number of output points exceeds 16 points, only the bit corresponding to the output module number within the number of output points occupied by the module (in increments of 16 points) turns on. Example: When a 64-point module is mounted on the slot 0, only b0 turns on when the fuse has blown. • Not cleared even if the blown fuse is replaced with a new one. The storage value is cleared by clearing the error.	S (Error)	New	Q00J/Q00/Q01
SD150 to SD157	I/O module verification error	Bit pattern, in units of 16 points, indicating the modules with verify errors. 0: No error 1: Error	• If the status of the I/O module changes from that obtained at power-on, the module No. (unit: 16 points) is stored in the following bit pattern. (When I/O module numbers have been set by the parameter, the parameter-set numbers are stored.) 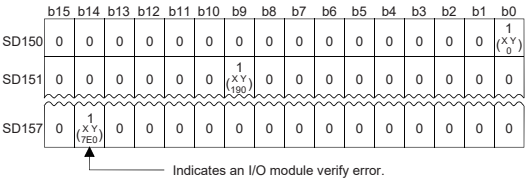 For a module whose number of I/O points exceeds 16 points, only the bit corresponding to the I/O module number within the number of I/O points occupied by the module (in increments of 16 points) turns on. Example: When a 64-point module is mounted on the slot 0, only b0 turns on when an error is detected. • Not cleared even if the blown fuse is replaced with a new one. The storage value is cleared by clearing the error.	S (Error)	New	Q00J/Q00/Q01
SD180	Latest volume of IP packet transferred data	Latest volume of IP packet transferred data (lower digits)	The latest value of total IP packet size (byte), which was transferred per unit time (1 second), is stored. Range: 0 to 4294967295 ($FFFFFFFF_H$)	S (Status change)	New	QnU[*5] LCPU[*6]
SD181		Latest volume of IP packet transferred data (upper digits)				

Number	Name	Meaning	Explanation	Set by (When Set)	Corresponding ACPU D9□□□	Corresponding CPU
SD182	Maximum volume of IP packet transferred data	Maximum volume of IP packet transferred data (lower digits)	The maximum value of total IP packet size (byte), which was transferred per unit time (1 second), is stored. Range: 0 to 4294967295 ($FFFFFFFF_H$)	S (Status change)	New	QnU*5 LCPU*6
SD183		Maximum volume of IP packet transferred data (upper digits)				

*1 Modules whose serial number (first five digits) is "07032" or later

*2 Modules whose serial number (first five digits) is "10042" or later

*3 Modules having an RS-232 connector (excluding the Q00UJCPU, Q00UCPU, and Q01UCPU)

*4 The following modules having an RS-232 connector support these areas:

- Universal model QCPU whose serial number (first five digits) is "13062" or later (For the Q02UCPU, the serial number (first five digits) must be "10102" or later.)
- Q00UJCPU, Q00UCPU, Q01UCPU

*5 Built-in Ethernet port QCPU whose serial number (first five digits) is "14022" or later

*6 Built-in Ethernet port LCPU whose serial number (first five digits) is "14112" or later

*7 Built-in Ethernet port LCPU whose serial number (first five digits) is "15102" or later

*8 The following modules having an RS-232 connector support these areas:

- Universal model QCPU whose serial number (first five digits) is "13062" or later (For the Q02UCPU, the serial number (first five digits) must be "10102" or later.)

*9 Modules whose serial number (first five digits) is "16112" or later

*10 Modules whose serial number (first five digits) is "16111" or earlier

(2) System information

<table>
<tr><th>Number</th><th>Name</th><th>Meaning</th><th>Explanation</th><th>Set by (When Set)</th><th>Corresponding ACPU D9□□□</th><th>Corresponding CPU</th></tr>
<tr><td rowspan="5">SD200</td><td rowspan="5">Status of switch</td><td rowspan="5">Status of CPU switch</td><td>• This register stores the status of the CPU module switches in the following bit pattern.
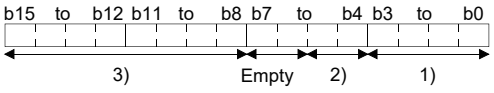

1): CPU switch status — 0: RUN, 1: STOP, 2: L.CLR
2): Memory card switch — Always OFF
3): DIP switch — b8 through b12 correspond to SW1 through SW5 of system setting switch 1. 0: OFF, 1: ON. b13 through b15 are empty.</td><td rowspan="2">S (Every END processing)</td><td rowspan="5">New</td><td>Qn(H)
QnPH
QnPRH</td></tr>
<tr><td>This register stores the status of the CPU module switches in the following bit pattern.
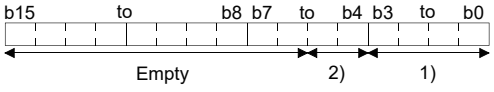

1): CPU switch status — 0: RUN, 1: STOP
2): Memory card switch — Always OFF</td><td>Q00J/Q00/Q01</td></tr>
<tr><td>This register stores the status of the CPU module switches in the following bit pattern.
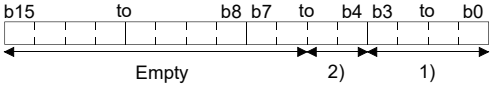

1): CPU switch status — 0: RUN, 1: STOP
2): Memory card switch — Always OFF</td><td rowspan="3">S (when RUN/STOP /RESET switch changed)</td><td>QnU (except the QnUDV and QnUDPV)</td></tr>
<tr><td>This register stores the status of the CPU module switches in the following bit pattern.
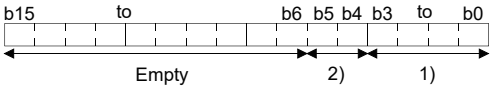

1): CPU switch status — 0: RUN, 1: STOP
2): SD memory card lock switch — 0: OFF, 1: ON</td><td>QnUDV
QnUDPV</td></tr>
<tr><td>This register stores the status of the CPU module switches in the following bit pattern.
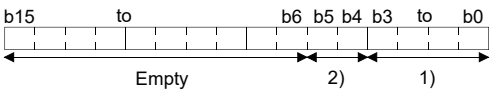

1): CPU switch status — 0: RUN, 1: STOP
2): SD memory card switch *1 — 0: Not usable, 1: Usable
*1 For the L02SCPU and L02SCPU-P, 2) is fixed at "0".</td><td>LCPU</td></tr>
</table>

Number	Name	Meaning	Explanation	Set by (When Set)	Corresponding ACPU D9□□□	Corresponding CPU
SD201	LED status	Status of CPU-LED	• This register stores the LED status information on the CPU module in the following bit pattern. • 0 is off, 1 is on, and 2 is flashing. 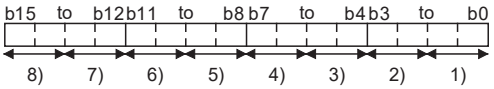 1): RUN, 2): ERR., 3): USER*1, 4): BAT.*1, 5): BOOT*1, 6): Empty*1, 7): Empty*1, 8): MODE*1 (0: Off, 1: Green, 2: Orange) *1 For the Basic model QCPU, 3) to 8) are left empty.	S (Status change)	New	Q00J/Q00/Q01 Qn(H) QnPH QnPRH
			• This register stores the LED status information on the CPU module in the following bit pattern. • 0 is off, 1 is on, and 2 is flashing. 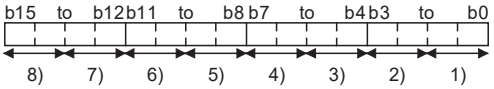 1): RUN, 2): ERR., 3): USER, 4): BAT., 5): BOOT*1, 6): SD CARD*2, 7): Empty, 8): MODE *1 For the Q00UJCPU, Q00UCPU, and Q01UCPU, 5) is left empty. *2 For the CPU module other than the QnUDVCPU and QnUDPVCPU, 6) is left empty.			QnU
			• This register stores the LED status information on the CPU module in the following bit pattern. • 0 is off, 1 is on, and 2 is flashing. 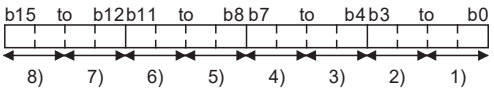 1): RUN, 2): ERR., 3): USER, 4): BAT., 5): Empty, 6): Empty, 7): I/O ERR., 8): MODE			LCPU
SD202	LED off command	Bit pattern of LED that is turned off	• By specifying the LEDs in this register and turning SM202 from off to on, the LEDs can be turned off. The USER and BOOT*1 LEDs can be specified. • The LED to be turned off can be specified in the following bit pattern. (Setting "1" turns off the LED and setting "0" does not turn off the LED.) 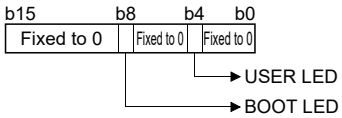 *1 For the Q00UJCPU, Q00UCPU, and Q01UCPU, the BOOT LED cannot be specified.	U	New	Qn(H) QnPH QnPRH QnU
			• By specifying the LEDs in this register and turning SM202 from off to on, the LEDs can be turned off. The USER LED can be specified. • The LED to be turned off can be specified in the following bit pattern. (Setting "1" turns off the LED and setting "0" does not turn off the LED.) 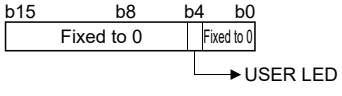 			LCPU

Number	Name	Meaning	Explanation	Set by (When Set)	Corresponding ACPU D9□□□	Corresponding CPU
SD203	Operating status of CPU	Operating status of CPU	This register stores the operating status of the CPU module in the following bit pattern. 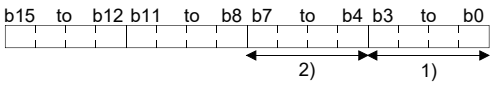 1): Operating status of CPU — 0: RUN, 2: STOP, 3: PAUSE 2): STOP/PAUSE cause *1 — 0: Switch, 1: Remote contact, 2: Remote operation from programming tool/ serial communication, etc., 3: Internal program instruction, 4: Error *1 The item detected first is stored. (However, for the Universal model QCPU and LCPU, the latest cause after operation status change is stored.)	S (Every END processing)	D9015 format change	QCPU LCPU
SD204	LED display color	CPU-LED display color	The LED display color of the LED status shown in SD201 1) to 8). 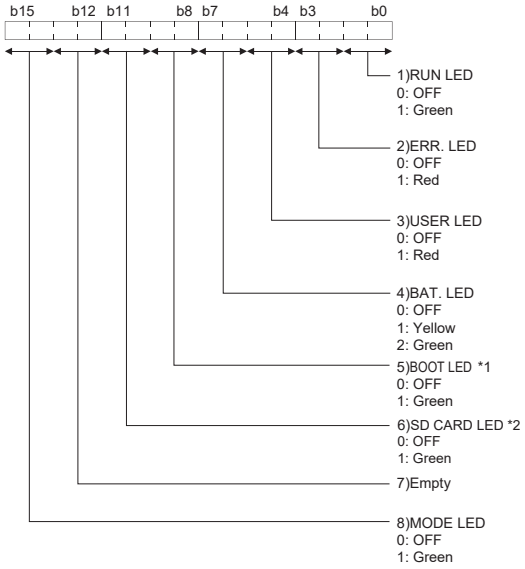 *1 For the Q00UJCPU, Q00UCPU, and Q01UCPU, 5) is left empty. *2 For the CPU module other than the QnUDVCPU and QnUDPVCPU, 6) is left empty.	S (Status change)	New	QnU

<table>
<tr><th>Number</th><th>Name</th><th>Meaning</th><th>Explanation</th><th>Set by (When Set)</th><th>Corresponding ACPU D9□□□</th><th>Corresponding CPU</th></tr>
<tr><td>SD204</td><td>LED display color</td><td>CPU-LED display color</td><td>The LED display color of the LED status shown in SD201 1) to 8).
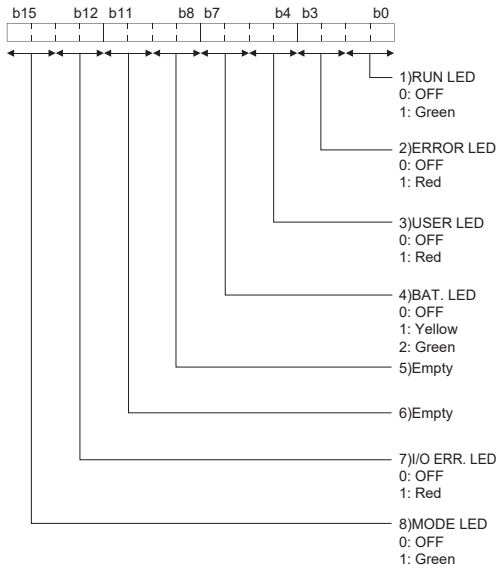
</td><td>S (Status change)</td><td>New</td><td>LCPU</td></tr>
<tr><td>SD207</td><td rowspan="3">LED display priority ranking</td><td>Priorities 1 to 4</td><td rowspan="3">• The priority of the LED indication in the case of an error is set by a cause number. (For the Basic model QCPU, only the annunciator (cause number 7) is available.)
• For the Universal model QCPU and LCPU, specify whether to enable or disable LED indication of the error that has priority when an error occurs.
• The setting areas for priorities are as follows:
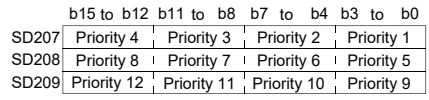
(Priority 11 is valid when Redundant CPU is used.)
(Priority 12 is valid when LCPU is used.)
[Default value]
SD207 = 4321_H (0000_H for Basic model QCPU) SD208 = 8765_H (0700_H for Basic model QCPU) (0765_H for Redundant CPU)
SD209 = $00A9_H$ (0000_H for Basic model QCPU) ($0B09_H$ for Redundant CPU, $CBA9_H$ for LCPU)
• No indication if "0" is stored.
• For the Basic model QCPU, the ERR. LED lights up upon turn-on of the annunciator, if "7" is stored in any of Priorities 1 to 11.
• For the Basic model QCPU, the ERR. LED does not light up upon turn-on of the annunciator, if "7" is not stored in any of Priorities 1 to 11. However, even if "7" is stored, the error, which makes CPU module operation stop (including the error that is specified with a parameter), will be indicated with the LED without condition.</td><td rowspan="3">U</td><td>D9038</td><td rowspan="3">Q00J/Q00/Q01*1
Qn(H)
QnPH
QnPRH
QnU
LCPU</td></tr>
<tr><td>SD208</td><td>Priorities 5 to 8</td><td>D9039 format change</td></tr>
<tr><td>SD209</td><td>Priorities 9 to 12</td><td>New</td></tr>
<tr><td>SD210</td><td>Clock data</td><td>Clock data (year, month)</td><td>This register stores the year (last two digits) and month in BCD as shown below.
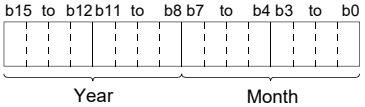

Example:
July, 1993
9307_H</td><td>S (Request)/ U</td><td>D9025</td><td>QCPU
LCPU</td></tr>
</table>

Number	Name	Meaning	Explanation	Set by (When Set)	Corresponding ACPU D9□□□	Corresponding CPU
SD211	Clock data	Clock data (day, hour)	This register stores the day and hour in BCD as shown below. 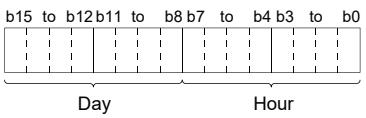 	S (Request)/ U	D9026	QCPU LCPU
SD212	Clock data	Clock data (minute, second)	This register stores the minute and the second in BCD as shown below. 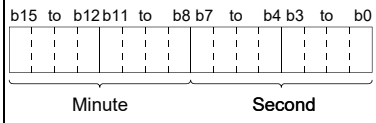 	S (Request)/ U	D9027	QCPU LCPU
SD213	Clock data	Clock data (higher digits of year, day of week)	This register stores the year (first two digits) and day of week in BCD as shown below. 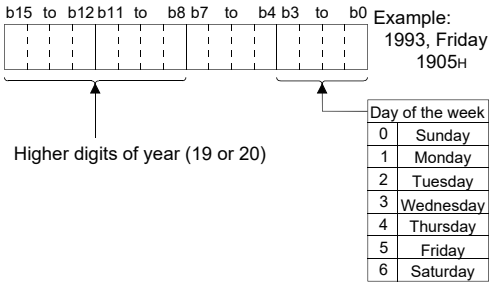 	S (Request)/ U	D9028	QCPU LCPU
SD220 SD221 SD222 SD223 SD224 SD225 SD226 SD227	LED display data	LED display data	• LED display ASCII data (16 characters) stored here. For the Basic model QCPU, an error message (up to 16 ASCII characters) is stored. (Including a message for the case the annunciator is on) b15 to b8 b7 to b0 SD220: 15th character from the right / 16th character from the right SD221: 13th character from the right / 14th character from the right SD222: 11th character from the right / 12th character from the right SD223: 9th character from the right / 10th character from the right SD224: 7th character from the right / 8th character from the right SD225: 5th character from the right / 6th character from the right SD226: 3rd character from the right / 4th character from the right SD227: 1st character from the right / 2nd character from the right • For the Basic model QCPU, Universal model QCPU or LCPU, HMI data at the time of CHK instruction execution are not stored.	S (When changed)	New	QCPU LCPU
SD235	Module to which online module change is being performed	Start I/O number of the module that is being changed online ÷ 10_H	This register stores the value obtained by dividing the start I/O number of the module that is being changed online with 10_H.	S (During online module change)	New	QnPH QnPRH
SD240	Base mode	0: Automatic mode 1: Detail mode	This register stores the base mode.	S (Initial)	New	QCPU

<table>
<tr><th>Number</th><th>Name</th><th>Meaning</th><th>Explanation</th><th>Set by (When Set)</th><th>Corresponding ACPU D9□□□</th><th>Corresponding CPU</th></tr>
<tr><td rowspan="2">SD241</td><td>Extension stage number</td><td>0: Main base only
1 to 7:Number of extension base units</td><td>This register stores the maximum number of extension base units installed.</td><td rowspan="2">S (Initial)</td><td rowspan="2">New</td><td>QCPU</td></tr>
<tr><td>Number of extension blocks</td><td>0: Main only
1 to 3:Number of extension blocks</td><td>This register stores the maximum number of connected extension blocks.</td><td>LCPU*9</td></tr>
<tr><td rowspan="3">SD242</td><td>A/Q base differentiation</td><td>Base type differentiation
0: QA**B is installed (A mode)
1: Q**B is installed (Q mode)</td><td>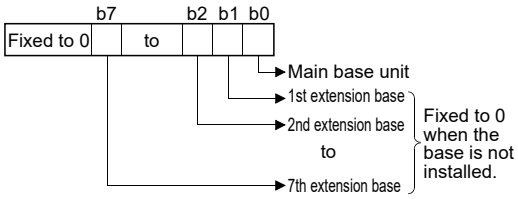
</td><td rowspan="3">S (Initial)</td><td rowspan="3">New</td><td>Qn(H)
QnPH
QnPRH</td></tr>
<tr><td>Installed Q base presence/ absence</td><td>Base type differentiation
0: Base not installed
1: Q**B is installed</td><td>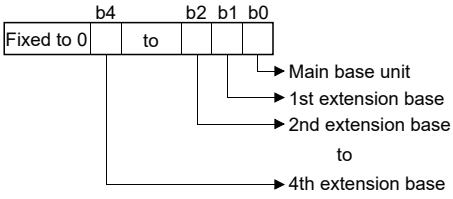
</td><td>Q00J/Q00/Q01</td></tr>
<tr><td>A/Q base differentiation</td><td>Base type differentiation
0: QA1S**B, QA1S6ADP+A1S*B, QA**B, and QA6ADP + A**B are installed / Base not installed
1: Q**B is installed</td><td>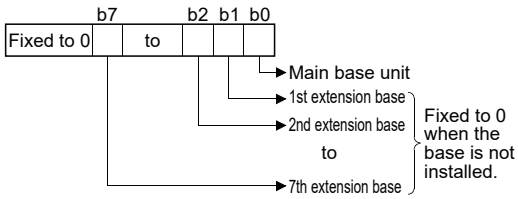

• For the Q00UJCPU, the bits for the third to seventh extension bases are fixed to "0".
• For the Q00UCPU, Q01UCPU, and Q02UCPU, the bits for the fifth to seventh extension bases are fixed to "0".</td><td>QnU</td></tr>
</table>

<table>
<tr><th>Number</th><th>Name</th><th colspan="2">Meaning</th><th>Explanation</th><th>Set by (When Set)</th><th>Corresponding ACPU D9□□□</th><th>Corresponding CPU</th></tr>
<tr><td>SD243
SD244</td><td>No. of base slots</td><td colspan="2" rowspan="3">No. of base slots</td><td>• The number of base unit slots set in parameter is stored. When the number is not set in parameter, the number of base unit slots used is stored.
<table><tr><th></th><th>b15 to b12</th><th>b11 to b8</th><th>b7 to b4</th><th>b3 to b0</th></tr><tr><td>SD243</td><td>Extension 3</td><td>Extension 2</td><td>Extension 1</td><td>Main</td></tr><tr><td>SD244</td><td>Extension 7</td><td>Extension 6</td><td>Extension 5</td><td>Extension 4</td></tr></table>• For the Q00UJCPU, the bits for the third to seventh extension bases are fixed to "0".
• For the Q00UCPU, Q01UCPU, and Q02UCPU, the bits for the fifth to seventh extension bases are fixed to "0".</td><td rowspan="3">S (Initial)</td><td rowspan="3">New</td><td>Qn(H)
QnPH
QnPRH
QnU</td></tr>
<tr><td>SD243
SD244</td><td>No. of base slots (Operation status)</td><td>The number of slots used is stored in the area corresponding to each base unit as shown below. (The number of slots set in the parameter setting.)
<table><tr><th></th><th>b15 to b12</th><th>b11 to b8</th><th>b7 to b4</th><th>b3 to b0</th></tr><tr><td>SD243</td><td>Extension 3</td><td>Extension 2</td><td>Extension 1</td><td>Main</td></tr><tr><td>SD244</td><td>Fixed to 0</td><td>Fixed to 0</td><td>Fixed to 0</td><td>Extension 4</td></tr></table></td><td>Q00J/Q00/Q01</td></tr>
<tr><td>SD245
SD246</td><td>No. of base slots (Mounting status)</td><td>The number of slots where modules are actually mounted is stored in the area corresponding to each base unit as shown below.
<table><tr><th></th><th>b15 to b12</th><th>b11 to b8</th><th>b7 to b4</th><th>b3 to b0</th></tr><tr><td>SD245</td><td>Extension 3</td><td>Extension 2</td><td>Extension 1</td><td>Main</td></tr><tr><td>SD246</td><td>Fixed to 0</td><td>Fixed to 0</td><td>Fixed to 0</td><td>Extension 4</td></tr></table></td><td>Q00J/Q00/Q01*1</td></tr>
<tr><td rowspan="2">SD250</td><td rowspan="2">Loaded maximum I/O</td><td colspan="2" rowspan="2">Loaded maximum I/O No</td><td>When SM250 is turned on from off, the first two digits of the number, which is the last I/O number of the mounted modules plus 1, are stored.</td><td>S (Request END)</td><td rowspan="2">New</td><td>Qn(H)
QnPH
QnPRH</td></tr>
<tr><td>The value obtained by adding 1 to the end I/O number of a mounted module and dividing by 16 is stored.
Example 1:End I/O number 010F SD250 = 0011_H
Example 2:End I/O number 0FFF SD250 = 0100_H</td><td>S (Initial)</td><td>Q00J/Q00/Q01
QnU
LCPU</td></tr>
<tr><td>SD254</td><td rowspan="9">MELSECNET/10, MELSECNET/H information</td><td colspan="2">Number of mounted modules</td><td>Indicates the number of mounted MELSECNET/10 modules or MELSECNET/H modules.</td><td rowspan="9">S (Initial)</td><td rowspan="9">New</td><td rowspan="5">QCPU</td></tr>
<tr><td>SD255</td><td rowspan="5">Information from 1st module</td><td>I/O No.</td><td>Indicates the I/O number of mounted MELSECNET/10 module or MELSECNET/H module.</td></tr>
<tr><td>SD256</td><td>Network No.</td><td>Indicates the network No. of mounted MELSECNET/10 module or MELSECNET/H module.</td></tr>
<tr><td>SD257</td><td>Group number</td><td>Indicates the group No. of mounted MELSECNET/10 module or MELSECNET/H module.</td></tr>
<tr><td>SD258</td><td>Station No.</td><td>Indicates the station No. of mounted MELSECNET/10 module or MELSECNET/H module.</td></tr>
<tr><td>SD259</td><td>Standby information</td><td>In the case of standby stations, the module number of the standby station is stored. (1 to 4)</td><td>Qn(H)
QnPH
QnPRH
QnU*2</td></tr>
<tr><td>SD260 to SD264</td><td colspan="2">Information from 2nd module</td><td>Data configuration is the same as that of the 1st module (SD255 to SD259).</td><td rowspan="2">Qn(H)
QnPH
QnPRH
QnU*3</td></tr>
<tr><td>SD265 to SD269</td><td colspan="2">Information from 3rd module</td><td>Data configuration is the same as that of the 1st module (SD255 to SD259).</td></tr>
<tr><td>SD270 to SD274</td><td colspan="2">Information from 4th module</td><td>Data configuration is the same as that of the 1st module (SD255 to SD259).</td><td></td></tr>
</table>

Number	Name	Meaning	Explanation	Set by (When Set)	Corresponding ACPU D9□□□	Corresponding CPU
SD280	CC-Link error	Error detection status	This register stores error detection status in the following bit pattern. 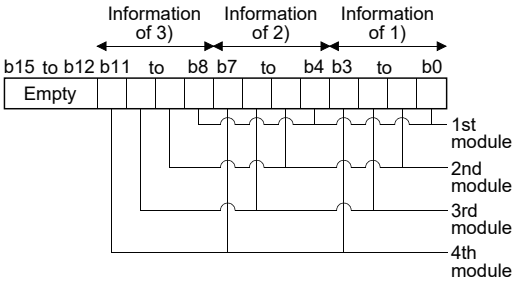 1): When Xn0 of a mounted CC-Link module turns on, the corresponding bit is set to 1 (on). 2): When either Xn1 or XnF of a mounted CC-Link module turns off, the corresponding bit is set to 1 (on). 3): When a mounted CC-Link module is not able to communicate with the CPU module, the corresponding bit is set to 1 (on). The above modules are numbered in order of the start I/O numbers. (However, the one where no start I/O number is set in parameter is not counted.)	S (Error)	New	Qn(H) QnPH QnPRH
SD281			This register stores error detection status in the following bit pattern. 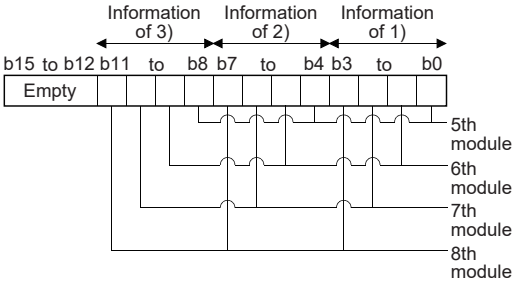 1): When Xn0 of a mounted CC-Link module turns on, the corresponding bit is set to 1 (on). 2): When either Xn1 or XnF of a mounted CC-Link module turns off, the corresponding bit is set to 1 (on). 3): When a mounted CC-Link module is not able to communicate with the CPU module, the corresponding bit is set to 1 (on). The above modules are numbered in order of the start I/O numbers. (However, the one where no start I/O number is set in parameter is not counted.)			Qn(H)[*4] QnPH[*4] QnPRH[*5]
SD282 SD283	Device assignment	Points assigned to D (for internal device extension)	• The number of points assigned to D is stored with 32 bits. (except the number of extended data registers) • The number of 32k or less points can be assigned to D.	S (Initial)	New	QnUDV QnUDPV
SD284 SD285		Points assigned to W (for internal device extension)	• The number of points assigned to W is stored with 32 bits. (except the number of extended link registers) • The number of 32k or less points can be assigned to W.			
SD286 SD287	Device assignment	Points assigned to M (for extension)	• The number of points assigned to M is stored with 32 bits. • The number of 32k or less points can be assigned to M.	S (Initial)	New	QnU[*6] LCPU
SD288 SD289		Points assigned to B (for extension)	• The number of points assigned to B is stored with 32 bits. • The number of 32k or less points can be assigned to B.			

Number	Name	Meaning	Explanation	Set by (When Set)	Corresponding ACPU D9□□□	Corresponding CPU
SD290	Device assignment (Same as parameter contents)	Number of points assigned for X	Stores the number of points currently set for X devices.	S (Initial)	New	QCPU LCPU
SD291		Number of points assigned for Y	Stores the number of points currently set for Y devices.			
SD292		Number of points assigned for M	Stores the number of points currently set for M devices. When 32769 or more points are assigned to M, 32768 (8000_H) is stored.			
SD293		Number of points assigned for L	Stores the number of points currently set for L devices.			
SD294		Number of points assigned for B	Stores the number of points currently set for B devices. When 32769 or more points are assigned to B, 32768 (8000_H) is stored.			
SD295		Number of points assigned for F	Stores the number of points currently set for F devices.			
SD296		Number of points assigned for SB	Stores the number of points currently set for SB devices.			
SD297		Number of points assigned for V	Stores the number of points currently set for V devices.			
SD298		Number of points assigned for S	Stores the number of points currently set for S devices.			
SD299		Number of points assigned for T	Stores the number of points currently set for T devices.			
SD300		Number of points assigned for ST	Stores the number of points currently set for ST devices.			
SD301		Number of points assigned for C	Stores the number of points currently set for C devices.			
SD302		Number of points assigned for D	Stores the number of points currently set for D devices. (The number of extended data register points is not included.) When 32769 or more points are assigned to D, 32768 (8000_H) is stored.			
SD303		Number of points assigned for W	Stores the number of points currently set for W devices. (The number of extended link register points is not included.) When 32769 or more points are assigned to W, 32768 (8000_H) is stored.			
SD304		Number of points assigned for SW	Stores the number of points currently set for SW devices.			
SD305	Device assignment (Index register)	16 bit modification of Number of points assigned for Z	• Stores the number of points of index register (Z) used for the 16-bit modification area. (Depending on the index modification setting for ZR in the parameter setting.) • When "Use ZZ" is selected for "Indexing Setting for Device" in the Device tab of "PLC parameter", $FFFF_H$ is stored.	S (Initial)	New	QnU LCPU
SD306	Device assignment (Same as parameter contents)	Number of points assigned for ZR (for extension)	The number of points for ZR is stored (except the number of points of extended data register (D) and extended link register (W)). The number of points assigned to ZR is stored into this register only when 1k point or more is set for the extended data register (D) or extended link register (W).	S (Initial)	New	QnU[*7] LCPU
SD307						

Number	Name	Meaning	Explanation	Set by (When Set)	Corresponding ACPU D9□□□	Corresponding CPU
SD308	Device assignment (assignment including the number of points set to the extended data register (D) and extended link register (W))	Number of points assigned for D (for inside + for extension)	The total points of the data register (D) in the internal device memory area and the extended data register (D) are stored as a 32-bit binary value.	S (Initial)	New	QnU[*7] LCPU
SD309						
SD310		Number of points assigned for W (for inside + for extension)	The total points of the link register (W) in the internal device memory area and the extended link register (W) are stored as a 32-bit binary value.			
SD311						
SD315	Time reserved for communication processing	Time reserved for communication processing	• This register specifies the amount of processing time for communication with a programming tool or another module. • The greater the value specified is, the shorter the response time for communication with another (such as a programming tool or serial communication module) is. However, scan time will increase by the specified time. • Setting range: 1 to 100ms A setting outside the above range is regarded as no setting.	U	New	Q00J/Q00/Q01 Qn(H) QnPH QnPRH
SD329	Online change (inactive block) target block number	SFC block number	• While online change (inactive block) is executed (SM329 is on.), this register stores the target SFC block number. • In other than the above status, this register stores $FFFF_H$.	S (Status change)	New	QnU[*8] LCPU[*14]
SD339	Latch clear operation setting	Latch clear operation setting	When $5A01_H$ is set to SD339, SM339 will be valid. After the latch clear processing ends, this register is cleared to 0.	S (Status change)/U	New	QnUDV[*12] QnUDPV[*13] LCPU[*11]
SD340	Ethernet information	Number of mounted modules	Indicates the number of mounted Ethernet modules.	S (Initial)	New	QCPU LCPU[*10]
SD341		Information of 1st module: I/O No.	Indicates I/O No. of mounted Ethernet module.			
SD342		Information of 1st module: Network No.	Indicates network No. of mounted Ethernet module.			
SD343		Information of 1st module: Group No.	Indicates group No. of the mounted Ethernet module.			
SD344		Information of 1st module: Station No.	Indicates station No. of mounted Ethernet module.			
SD345		Information of 1st module: Empty	Empty (The IP address of the 1st Ethernet module is stored in the buffer memory.)			Qn(H) QnPH QnPRH QnU[*2] LCPU[*10]
SD346						
SD347		Information of 1st module: Empty	Empty (An error code of the 1st Ethernet module is read with the ERRRD instruction.)			
SD348 to SD354		Information from 2nd module	Data configuration is the same as that of the 1st module (SD341 to SD347).			
SD355 to SD361		Information from 3rd module	Data configuration is the same as that of the 1st module (SD341 to SD347).			Qn(H) QnPH QnPRH QnU[*3]
SD362 to SD368		Information from 4th module	Data configuration is the same as that of the 1st module (SD341 to SD347).			

Number	Name	Meaning	Explanation	Set by (When Set)	Corresponding ACPU D9□□□	Corresponding CPU
SD380	Ethernet instruction reception status	Instruction reception status of 1st module	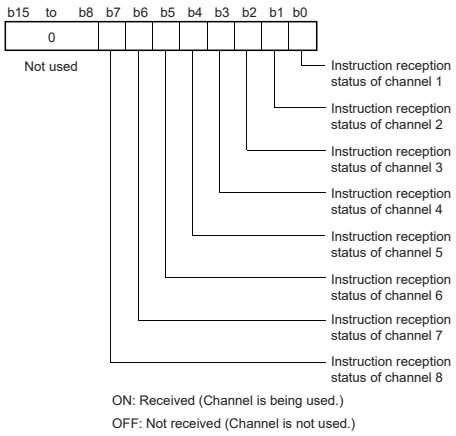	S (Instruction execution)	New	QnPRH
SD381	Ethernet instruction reception status	Instruction reception status of 2nd module	Data configuration is the same as that of the 1st module (SD380).	S (Instruction execution)	New	QnPRH
SD382		Instruction reception status of 3rd module	Data configuration is the same as that of the 1st module (SD380).			
SD383		Instruction reception status of 4th module	Data configuration is the same as that of the 1st module (SD380).			
SD393	Multiple CPU system information	Number of multiple CPUs	The number of CPU modules that comprise the multiple CPU system is stored. (1 to 4, Empty also included)	S (Initial)	New	Q00/Q01*1 QnU
SD394		CPU mounting information	This register stores information on the CPU module types of CPU No.1 to No.3 and whether or not the CPU modules are mounted. 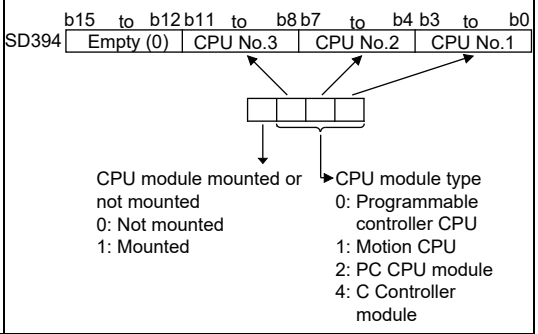			Q00/Q01*1
SD395		Multiple CPU number	In a multiple CPU system configuration, the CPU number of the host CPU is stored. CPU No. 1: 1, CPU No. 2: 2, CPU No. 3: 3, CPU No. 4: 4			Q00/Q01*1 Qn(H)*1 QnPH QnU
SD396		No. 1 CPU operation status	The operation information of each CPU No. is stored. (The information on the number of multiple CPUs indicated in SD393 is stored.) 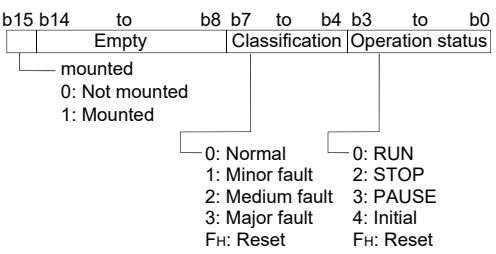	S (END processing error)		Q00/Q01*1 QnU
SD397		No. 2 CPU operation status				Q00/Q01*1 QnU*7
SD398		No. 3 CPU operation status				
SD399		No. 4 CPU operation status				QnU*3

*1 Modules whose function version B or later
*2 Universal model QCPU except the Q00UJCPU, Q00UCPU, and Q01UCPU
*3 Universal model QCPU except the Q00UJCPU, Q00UCPU, Q01UCPU, and Q02UCPU
*4 Modules whose serial number (first five digits) is "08032" or later
*5 Modules whose serial number (first five digits) is "09102" or later
*6 Modules whose serial number (first five digits) is "10042" or later
*7 Universal model QCPU except the Q00UJCPU
*8 Modules whose serial number (first five digits) is "12052" or later
*9 Modules whose serial number (first five digits) is "13072" or later
*10 Built-in Ethernet port LCPU whose serial number (first five digits) is "14112" or later
*11 Modules whose serial number (first five digits) is "15042" or later
*12 Modules whose serial number (first five digits) is "15043" or later
*13 Modules whose serial number (first five digits) is "15072" or later
*14 Modules whose serial number (first five digits) is "15102" or later (excluding the L02CPU, L02SCPU, L02CPU-P, and L02SCPU-P)

(3) System clock/counter

Number	Name	Meaning	Explanation	Set by (When Set)	Corresponding ACPU D9□□□	Corresponding CPU
SD412	1 second counter	Number of counts in 1-second units	• This register is incremented by 1 for each second after the CPU module is set to RUN. • Count repeats from 0 to 32767 to -32768 to 0.	S (Status change)	D9022	QCPU LCPU
SD414	2n second clock setting	2n second clock units	• Stores value n of 2n second clock (Default is 30). • Setting can be made between 1 and 32767.	U	New	QCPU LCPU
SD415	2nms clock setting	2nms clock units	• Stores value n of 2nms clock (Default is 30). • Setting can be made between 1 and 32767.	U	New	Qn(H) QnPH QnPRH QnU LCPU
SD420	Scan counter	Number of counts in each scan	• This register is incremented by 1 for each scan of a scan execution type program after the CPU module is set to RUN. (Not incremented for each scan of an initial execution type program.) • Count repeats from 0 to 32767 to -32768 to 0.	S (Every END processing)	New	Qn(H) QnPH QnPRH QnU LCPU
			• This register is incremented by 1 for each scan after the CPU module is set to RUN. • Count repeats from 0 to 32767 to -32768 to 0.			Q00J/Q00/Q01
SD430	Low speed scan counter	Number of counts in each scan	• This register is incremented by 1 for each scan of a low-speed execution type program after the CPU module is set to RUN. • Count repeats from 0 to 32767 to -32768 to 0. • Used only for low speed execution type programs.	S (Every END processing)	New	Qn(H) QnPH

(4) Scan information

Number	Name	Meaning	Explanation	Set by (When Set)	Corresponding ACPU D9□□□	Corresponding CPU
SD500	Execution program No.	Program No. in execution	Program number of program currently being executed is stored as BIN value.	S (Status change)	New	Qn(H) QnPH QnPRH QnU LCPU
SD510	Low speed execution type program No.	Low speed execution type program No. in execution	• Program number of low speed execution type program No. currently being executed is stored as BIN value. • Enabled only when SM510 is ON.	S (Every END processing)	New	Qn(H) QnPH
SD520	Current scan time	Current scan time (ms value)	This register stores the current scan time. (The time is measured in increments of 100μs.) (in increments of 1μs for the Universal model QCPU and LCPU).) • SD520: Stores a ms value (storage range: 0 to 65535). • SD521: Stores a μs value (storage range: 0 to 900 (0 to 999 for the Universal model QCPU and LCPU)). Example: When the current scan time is 23.6ms, the following values are stored: • SD520 = 23 • SD521 = 600 A value in this register is cleared to "0" when the CPU module is set to STOP.	S (Every END processing)	D9018 format change	QCPU LCPU
SD521		Current scan time (μs value)			New	
SD522	Initial scan time	Initial scan time (ms value)	This register stores the scan time of an initial execution type program. (The time is measured in increments of 100μs.) (in increments of 1μs for the Universal model QCPU and LCPU).) • SD522: Stores a ms value (storage range: 0 to 65535). • SD523: Stores a μs value (storage range: 0 to 900 (0 to 999 for the Universal model QCPU and LCPU)). A value in this register is cleared to "0" when the CPU module is switched from STOP to RUN.	S (First END processing)	New	Qn(H) QnPH QnPRH QnU LCPU
SD523		Initial scan time (μs value)				
SD524	Minimum scan time	Minimum scan time (ms value)	This register stores the minimum scan time. (The time is measured in increments of 100μs.) • SD524: Stores a ms value (storage range: 0 to 65535). • SD525: Stores a μs value (storage range: 0 to 900) A value in this register is cleared to "0" when the CPU module is switched from STOP to RUN.	S (Every END processing)	New	Q00J/Q00/Q01
SD525		Minimum scan time (μs value)				
SD526	Maximum scan time	Maximum scan time (ms value)	This register stores the maximum scan time. (The time is measured in increments of 100μs.) • SD526: Stores a ms value (storage range: 0 to 65535). • SD527: Stores a μs value (storage range: 0 to 900) A value in this register is cleared to "0" when the CPU module is switched from STOP to RUN.	S (Every END processing)	New	Q00J/Q00/Q01
SD527		Maximum scan time (μs value)				
SD524	Minimum scan time	Minimum scan time (ms value)	This register stores the minimum scan time except that of an initial execution type program. (The time is measured in increments of 100μs.) (in increments of 1μs for the Universal model QCPU and LCPU).) • SD524: Stores a ms value (storage range: 0 to 65535). • SD525: Stores a μs value (storage range: 0 to 900 (0 to 999 for the Universal model QCPU and LCPU)). A value in this register is cleared to "0" when the CPU module is switched from STOP to RUN.	S (Every END processing)	D9017 format change	Qn(H) QnPH QnPRH QnU LCPU
SD525		Minimum scan time (μs value)			New	

Number	Name	Meaning	Explanation	Set by (When Set)	Corresponding ACPU D9□□□	Corresponding CPU
SD526	Maximum scan time	Maximum scan time (ms value)	This register stores the maximum scan time excluding the scan time of an initial execution type program. (The time is measured in increments of 100μs.) (in increments of 1μs for the Universal model QCPU and LCPU).) • SD526: Stores a ms value (storage range: 0 to 65535). • SD527: Stores a μs value (storage range: 0 to 900 (0 to 999 for the Universal model QCPU and LCPU)). A value in this register is cleared to "0" when the CPU module is switched from STOP to RUN.	S (Every END processing)	D9019 format change	Qn(H) QnPH QnPRH QnU LCPU
SD527		Maximum scan time (μs value)			New	
SD528	Current scan time for low speed execution type programs	Current scan time (ms value)	This register stores the current scan time of a low-speed execution type program. (The time is measured in increments of 100μs.) • SD528: Stores a ms value (storage range: 0 to 65535) • SD529: Stores a μs value (storage range: 0 to 900) A value in this register is cleared to "0" when the CPU module is set to STOP.	S (Every END processing)	New	Qn(H) QnPH
SD529		Current scan time (μs value)				
SD532	Minimum scan time for low speed execution type programs	Minimum scan time (ms value)	This register stores the minimum scan time of a low-speed execution type program. (The time is measured in increments of 100μs.) • SD532: Stores a ms value (storage range: 0 to 65535) • SD533: Stores a μs value (storage range: 0 to 900) A value in this register is cleared to "0" when the CPU module is switched from STOP to RUN.	S (Every END processing)	New	Qn(H) QnPH
SD533		Minimum scan time (μs value)				
SD534	Maximum scan time for low speed execution type programs	Maximum scan time (ms value)	This register stores the maximum scan time excluding the time taken to the first scan of a low-speed execution type program. (The time is measured in increments of 100μs.) • SD534: Stores a ms value (storage range: 0 to 65535) • SD535: Stores a μs value (storage range: 0 to 900) A value in this register is cleared to "0" when the CPU module is switched from STOP to RUN.	S (Every END processing)	New	Qn(H) QnPH
SD535		Maximum scan time (μs value)				
SD540	END processing time	END processing time (ms value)	Stores the time from the end of a scan program to the start of the next scan. (The time is measured in increments of 100μs.) • SD540: Stores a ms value (storage range: 0 to 65535) • SD541: Stores a μs value (storage range: 0 to 900) A value in this register is cleared to "0" when the CPU module is switched from STOP to RUN.	S (Every END processing)	New	Q00J/Q00/Q01
SD541		END processing time (μs value)				
SD540	END processing time	END processing time (ms value)	Stores the time from the end of a scan execution type program to the start of the next scan. (The time is measured in increments of 100μs.) (in increments of 1μs for the Universal model QCPU and LCPU).) • SD540: Stores a ms value (storage range: 0 to 65535) • SD541: Stores a μs value (storage range: 0 to 900 (0 to 999 for the Universal model QCPU and LCPU)). A value in this register is cleared to "0" when the CPU module is switched from STOP to RUN.	S (Every END processing)	New	Qn(H) QnPH QnPRH QnU LCPU
SD541		END processing time (μs value)				
SD542	Constant scan wait time	Constant scan wait time (ms value)	This register stores wait time for constant scan. (The time is measured in increments of 100μs.) (in increments of 1μs for the Universal model QCPU and LCPU).) • SD542: Stores a ms value (storage range: 0 to 65535) • SD543: Stores a μs value (storage range: 0 to 900 (0 to 999 for the Universal model QCPU and LCPU)). A value in this register is cleared to "0" when the CPU module is switched from STOP to RUN.	S (Every END processing)	New	QCPU LCPU
SD543		Constant scan wait time (μs value)				

Number	Name	Meaning	Explanation	Set by (When Set)	Corresponding ACPU D9□□□	Corresponding CPU
SD544	Cumulative execution time for low speed execution type programs	Cumulative execution time for low speed execution type programs (ms value)	Stores the cumulative execution time of a low-speed execution type program. (The time is measured in increments of 100μs.) • SD544: Stores a ms value (storage range: 0 to 65535) • SD545: Stores a μs value (storage range: 0 to 900) Cleared to 0 after the end of one scan of a low-speed execution type program. A value in this register is cleared to "0" when the CPU module is switched from STOP to RUN.	S (Every END processing)	New	Qn(H) QnPH
SD545		Cumulative execution time for low speed execution type programs (μs value)				
SD546	Execution time for low speed execution type programs	Execution time for low speed execution type programs (ms value)	Stores the execution time of a low-speed execution type program in one scan. (The time is measured in increments of 100μs.) • SD546: Stores a ms value (storage range: 0 to 65535) • SD547: Stores a μs value (storage range: 0 to 900) Stored every scan. A value in this register is cleared to "0" when the CPU module is switched from STOP to RUN.	S (Every END processing)	New	Qn(H) QnPH
SD547		Execution time for low speed execution type programs (μs value)				
SD548	Scan program execution time	Scan program execution time (ms value)	Stores the execution time of a scan program in one scan. (The time is measured in increments of 100μs.) (in increments of 1μs for the Universal model QCPU and LCPU).) • SD548: Stores a ms value (storage range: 0 to 65535) • SD549: Stores a μs value (storage range: 0 to 900 (0 to 999 for the Universal model QCPU and LCPU)). Stored every scan. A value in this register is cleared to "0" when the CPU module is switched from STOP to RUN.	S (Every END processing)	New	Q00J/Q00/Q01 QnU LCPU
SD549		Scan program execution time (μs value)				
SD548	Scan execution type program execution time	Scan execution type program execution time (ms value)	Stores the execution time of a scan execution type program in one scan. (The time is measured in increments of 100μs.) • SD548: Stores a ms value (storage range: 0 to 65535) • SD549: Stores a μs value (storage range: 0 to 900) Stored every scan. A value in this register is cleared to "0" when the CPU module is switched from STOP to RUN.	S (Every END processing)	New	Qn(H) QnPH QnPRH
SD549		Scan execution type program execution time (μs value)				
SD550	Service interval measurement module	Module No.	Sets I/O number for module that measures service interval.	U	New	Qn(H) QnPH QnPRH
SD551	Service interval time	Module service interval (ms value)	This register stores the service interval of a module specified by SD550 when SM551 is turned on. (The time is measured in increments of 100μs.) • SD551: Stores a ms value (storage range: 0 to 65535) • SD552: Stores a μs value (storage range: 0 to 900)	S (Request)	New	Qn(H) QnPH QnPRH
SD552		Module service interval (μs value)				

(5) Display unit information

Number	Name	Meaning	Explanation	Set by (When Set)	Corresponding ACPU D9□□□	Corresponding CPU
SD581	Displayed language information	Language used on a display unit	This register stores a value corresponding to the language used on a display unit. Either of the following is stored: • 1: English • 2: Japanese	S (Status change)	New	LCPU*1

*1 Modules whose serial number (first five digits) is "12112" or later

(6) Drive information

Number	Name	Meaning	Explanation	Set by (When Set)	Corresponding ACPU D9□□□	Corresponding CPU
SD600	Memory card types	Memory card types	This register stores a value indicating the type of used memory card in the following bit pattern. 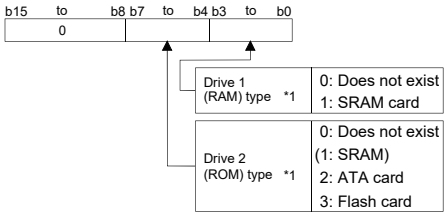 *1 For the Q00UJCPU, Q00UCPU, and Q01UCPU, the drive 1 (RAM) type and drive 2 (ROM) type are fixed at "0".	S (Initial and card removal)	New	Qn(H) QnPH QnPRH QnU (except the QnUDV and QnUDPV)
		SD memory card types	This register stores a value indicating the type of used memory card in the following bit pattern. 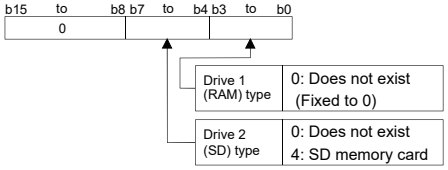 			QnUDV QnUDPV LCPU
SD602	Drive 1 (Memory card RAM) capacity	Drive 1 capacity	This register stores the drive 1 storage capacity (unit: 1K byte). (Free space value after formatting is stored.)	S (Initial and card removal)	New	Qn(H) QnPH QnPRH QnU*2 (except the QnUDV and QnUDPV)
SD603	Drive 2 (Memory card ROM) capacity	Drive 2 capacity	This register stores the drive 2 storage capacity (unit: 1K byte).*1 *1 For the Q2MEM-8MBA, a value stored to this register depends on the product control number of the ATA card. For details, refer to the following. 📖User's Manual (Hardware Design, Maintenance and Inspection) for the CPU module used	S (Initial and card removal)	New	Qn(H) QnPH QnPRH QnU*2 (except the QnUDV and QnUDPV)
	Drive 2 (Memory card SD) capacity		This register stores the drive 2 storage capacity (unit: 1K byte). (Free space value after formatting is stored.) If the capacity is 32768K bytes or more, the stored value will be 32767K bytes.			QnUDV QnUDPV
SD604	Memory card use conditions	Memory card use conditions	This register stores the usage status of a memory card in the following bit pattern. (Each bit is on while the memory card is being used.) • b0: Boot operation (QBT) • b1: Parameters (QPA) • b2: Device comments (QCD) • b3: Device initial value (QDI) • b4: File register (QDR) • b5: Sampling trace (QTD) • b6 to b8: Not used • b9: Error history (QFD) • b10: Not used • b11: Local device (QDL) • b12 to b15: Not used	S (Status change)	New	Qn(H) QnPH QnPRH

Number	Name	Meaning	Explanation	Set by (When Set)	Corresponding ACPU D9□□□	Corresponding CPU
SD604	Memory card use conditions	Memory card use conditions	This register stores the usage status of a memory card in the following bit pattern. (Each bit is on while the memory card is being used.) • b0: Boot operation (QBT) (This bit turns on at boot start and turns off at the completion.) • b1: Parameters (QPA) • b2: Device comments (QCD) • b3: Device initial value (QDI) (This bit turns on when the writing of initial device values is started and turns off at the completion.) • b4: File register (QDR) • b5: Sampling trace (QTD) • b6: Not used • b7: Backup data (QBP) • b8 to b10: Not used • b11: Local device (QDL) • b12 to b15: Not used	S (Status change)	New	QnU[*2] (except the QnUDV and QnUDPV)
		SD memory card use conditions	This register stores the usage status of a memory card in the following bit pattern. (Each bit is on while the memory card is being used.) • b0: Boot operation (QBT) (This bit turns on at boot start and turns off at the completion.) • b1: Parameters (QPA) • b2: Device comments (QCD) • b3: Device initial value (QDI) (This bit turns on when the writing of initial device values is started and turns off at the completion.) • b4 to b6: Not used • b7: Backup data (QBP) • b8 to b11: Not used • b12: Predefined protocol setting (QPT) (This bit turns on while checking the predefined protocol setting data and turns off at the completion.) • b13: Data logging setting (QLG) (This bit turns on when data logging setting is registered and turns off at the completion or stop of data logging.) • b14: Project data batch save/load[*6] and iQ Sensor Solution data backup/restoration (This bit turns on while the project is batch-saved/loaded or the iQ Sensor Solution data backup/restoration is executed.) • b15: Operation history (QOL)[*7]			QnUDV QnUDPV LCPU
SD606	Drive 2 (Memory card SD) capacity	Drive 2 storage capacity (lower bits)	This register stores the drive 2 storage capacity (unit: 1M byte). (Free space value after formatting is stored.)	S (Initial and card removal)	New	QnUDV QnUDPV LCPU
SD607		Drive 2 storage capacity (upper bits)				
SD616	Free space in drive 2 (Memory card SD)	Free space in drive 2 (lower bits)	This register stores free space value in the drive 2 (unit: 1M byte).	S (Status change)	New	QnUDV QnUDPV LCPU
SD617		Free space in drive 2 (upper bits)				

Number	Name	Meaning	Explanation	Set by (When Set)	Corresponding ACPU D9□□□	Corresponding CPU
SD620	Drive 3/4 types	Drive 3/4 types	This register stores the usage status of drives 3 and 4 in the following bit pattern. 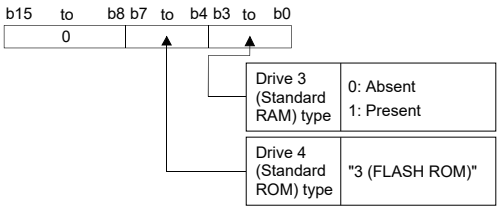	S (Initial)	New	Q00J/Q00/Q01
			This register stores the usage status of drives 3 and 4 in the following bit pattern. 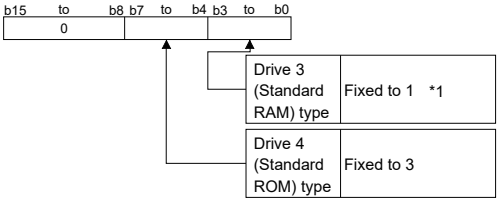 *1 For the Q00UJCPU, the drive 3 (Standard RAM) type is fixed at "0".			Qn(H) QnPH QnPRH QnU LCPU
SD622	Drive 3 (Standard RAM) capacity	Drive 3 capacity	This register stores the drive 3 storage capacity (unit: 1K byte).	S (Initial)	New	Q00J/Q00/Q01
			This register stores the drive 3 storage capacity (unit: 1K byte). (Free space value after formatting is stored.)			Qn(H) QnPH QnPRH QnU LCPU
SD623	Drive 4 (Standard ROM) capacity	Drive 4 capacity	This register stores the drive 4 storage capacity (unit: 1K byte).	S (Initial)	New	Q00J/Q00/Q01
			This register stores the drive 4 storage capacity (unit: 1K byte). (Free space value after formatting is stored.)			Qn(H) QnPH QnPRH QnU LCPU
SD624	Drive 3/4 use conditions	Drive 3/4 use conditions	This register stores the usage status of the drives 3 and 4 in the following bit pattern. 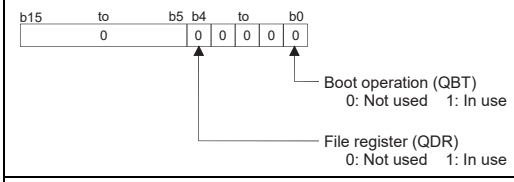	S (Status change)	New	Q00J/Q00/Q01
			This register stores the usage status of the drives 3 and 4 in the following bit pattern. (Each bit is on while the corresponding drive is being used.) • b0: Boot operation (QBT) • b1: Parameters (QPA) • b2: Device comments (QCD) • b3: Device initial value (QDI) • b4: File register (QDR) • b5: Sampling trace (QTD) • b6 to b8: Not used • b9: Error history (QFD) • b10: SFC trace (QTS) • b11: Local device (QDL) • b12 to b15: Not used			Qn(H) QnPH QnPRH

Number	Name	Meaning	Explanation	Set by (When Set)	Corresponding ACPU D9□□□	Corresponding CPU
SD624	Drive 3/4 use conditions	Drive 3/4 use conditions	This register stores the usage status of the drives 3 and 4 in the following bit pattern. (Each bit is on while the corresponding drive is being used.) • b0: Not used • b1: Parameters (QPA) • b2: Device comments (QCD) • b3: Device initial value (QDI) (This bit turns on when the writing of initial device values is started and turns off at the completion.) • b4: File register (QDR) • b5: Sampling trace (QTD) • b6 and b7: Not used • b8: Module error log (QIE) • b9 and b10: Not used • b11: Local device (QDL) • b12 to b15: Not used	S (Status change)	New	QnU[*2] (except the QnUDV and QnUDPV)
			This register stores the usage status of the drives 3 and 4 in the following bit pattern. (Each bit is on while the corresponding drive is being used.) • b0: Not used • b1: Parameters (QPA) • b2: Device comments (QCD) • b3: Device initial value (QDI) (This bit turns on when the writing of initial device values is started and turns off at the completion.) • b4: File register (QDR) • b5: Sampling trace (QTD) • b6 and b7: Not used • b8: Module error log (QIE) • b9 and b10: Not used • b11: Local device (QDL) • b12: Predefined protocol setting (QPT) (This bit turns on while checking the predefined protocol setting data and turns off at the completion.) • b13: Data logging setting (QLG) (This bit turns on when data logging setting is registered and turns off at the completion or stop of data logging. For the L02SCPU and L02SCPU-P, this bit is fixed to off.) • b14: Not used • b15: Operation history (QOL)[*7]			QnUDV QnUDPV LCPU

Number	Name	Meaning	Explanation	Set by (When Set)	Corresponding ACPU D9□□□	Corresponding CPU
SD634	Project data batch save error cause	Project data batch save error cause	This register stores the cause of an error occurred when the batch save function is executed. • 0_H: No error • 100_H: SD memory card not inserted • 101_H: Use of SD memory card stopped • 200_H: Save-target data size exceeded the capacity of memory card • 201_H: Number of save files out-of-range • 202_H: Number of save folders out-of-range • 300_H: Write protection set to SD memory card • 400_H: SD memory card write error • 401_H: SD memory card removed • 500_H: Save-target data read error (program memory) • 503_H: Save-target data read error (standard RAM) • 504_H: Save-target data read error (standard ROM) • 505_H: Save-target data read error (SD memory card) • 510_H: Save-target data read error (system data) • 600_H: The batch save function was executed during the latch data backup to the standard ROM. • 601_H: The batch save function was executed during online change. • 602_H: The batch save function was executed with an FTP client connected to and communicated with the CPU module. • 604_H: The batch save function was executed while the CPU module change function with SD memory card was being executed. • 607_H: The batch save function was executed while the iQ Sensor Solution function (data backup/restoration) was being executed. • 608_H: The batch save function was executed while the file transfer function (FTP client) was being executed. • 701_H: The batch save function was executed to the program where "Execution Program Protection Setting" was enabled with a block password.	S (Error)	New	LCPU*5
SD635	Project data batch save status	Project data batch save status	This register stores the current status of the batch save function. • 0_H: Not executed • 1_H: Being executed • 2_H: Completed • FF_H: Error	S (Status change)	New	LCPU*5

Number	Name	Meaning	Explanation	Set by (When Set)	Corresponding ACPU D9□□□	Corresponding CPU
SD636	Project data batch load error cause	Project data batch load error cause	This register stores the cause of an error occurred when the batch load function is executed. • 0_H: No error • 800_H: Mismatch of CPU module models • 801_H: Batch-save/load-target data read error (SD memory card) • 802_H: SD memory card removed • 803_H: No system file (SVLDINF.QSL) existed • 804_H: Mismatch of file password 32 • 805_H: No specified folder existed or specified number out-of-range • 810_H: Load-destination drive write error • 820_H: Load error of a file in use • 821_H: Format was executed while a file that is being used existed. • 900_H: SD memory card not inserted • 901_H: Use of SD memory card stopped • $A00_H$: Load-target data size exceeded the capacity of drive or memory card • $B00_H$: Write protection set to SD memory card • $C00_H$: The batch load function was executed during the latch data backup to the standard ROM. • $C01_H$: The batch load function was executed during online change. • $C02_H$: The batch load function was executed with an FTP client connected to and communicated with the CPU module. • $C04_H$: The batch load function was executed while the CPU module change function with SD memory card was being executed. • $C07_H$: The batch load function was executed while the iQ Sensor Solution function (data backup/restoration) was being executed. • $C08_H$: The batch save function was executed while the file transfer function (FTP client) was being executed. • $C10_H$: CPU module in RUN or PAUSE status	S (Error)	New	LCPU[*5]
SD637	Project data batch load status	Project data batch load status	This register stores the current status of the batch load function. • 0_H: Not executed • 1_H: Being executed • 2_H: Completed • FF_H: Error	S (Status change)	New	LCPU[*5]
SD638	Directory batch delete completion status	Directory batch delete completion status	This register stores the completion status of the directory batch delete processing. 0: Normally completed Other than 0: Error code When the delete processing is instructed, "0" is set.	S (Writing)	New	QnUDV QnUDPV
SD639	Directory batch deletion status	Directory batch deletion status	The status of the directory batch delete processing is indicated in percentage (0 or 100 %). • When the delete processing is instructed, "0" is set.	S (Writing)	New	QnUDV QnUDPV
SD640	File register drive	Drive number	This register stores the number of a drive storing a file register.[*1] *1 For the QnUDVCPU, QnUDPVCPU, or LCPU, this register is fixed at drive 3.	S (Status change)	New	Q00J/Q00/Q01 Qn(H) QnPH QnPRH QnU[*3] LCPU

<table>
<tr><th>Number</th><th>Name</th><th>Meaning</th><th>Explanation</th><th>Set by (When Set)</th><th>Corresponding ACPU D9□□□</th><th>Corresponding CPU</th></tr>
<tr><td>SD641
SD642
SD643</td><td rowspan="5">File register file name</td><td rowspan="5">File register file name</td><td>This register stores the file name of a file register (MAIN.QDR) in ASCII code.
<table><tr><th></th><th>b15 to b8</th><th>b7 to b0</th></tr><tr><td>SD641</td><td>2nd character (A)</td><td>1st character (M)</td></tr><tr><td>SD642</td><td>4th character (N)</td><td>3rd character (I)</td></tr><tr><td>SD643</td><td>6th character ( )</td><td>5th character ( )</td></tr><tr><td>SD644</td><td>8th character ( )</td><td>7th character ( )</td></tr><tr><td>SD645</td><td>1st character of the extension (Q)</td><td>2E_H(.)</td></tr><tr><td>SD646</td><td>3rd character of the extension (R)</td><td>2nd character of the extension (D)</td></tr></table></td><td>S (Initial)</td><td rowspan="5">New</td><td>Q00J/Q00/Q01</td></tr>
<tr><td>SD644</td><td>This register stores the file name of the file register selected by the parameter or the QDRSET instruction in ASCII code (with an extension).
<table><tr><th></th><th>b15 to b8</th><th>b7 to b0</th></tr><tr><td>SD641</td><td>2nd character</td><td>1st character</td></tr><tr><td>SD642</td><td>4th character</td><td>3rd character</td></tr><tr><td>SD643</td><td>6th character</td><td>5th character</td></tr><tr><td>SD644</td><td>8th character</td><td>7th character</td></tr><tr><td>SD645</td><td>1st character of extension</td><td>2E_H(.)</td></tr><tr><td>SD646</td><td>3rd character of the extension</td><td>2nd character of the extension</td></tr></table></td><td rowspan="3">S (Status change)</td><td>Qn(H)
QnPH
QnPRH
QnU*3</td></tr>
<tr><td>SD645</td><td rowspan="2">This register stores the file name of the file register selected by the parameter in ASCII code (with an extension).
<table><tr><th></th><th>b15 to b8</th><th>b7 to b0</th></tr><tr><td>SD641</td><td>2nd character</td><td>1st character</td></tr><tr><td>SD642</td><td>4th character</td><td>3rd character</td></tr><tr><td>SD643</td><td>6th character</td><td>5th character</td></tr><tr><td>SD644</td><td>8th character</td><td>7th character</td></tr><tr><td>SD645</td><td>1st character of extension</td><td>2E_H(.)</td></tr><tr><td>SD646</td><td>3rd character of the extension</td><td>2nd character of the extension</td></tr></table></td><td rowspan="2">LCPU</td></tr>
<tr><td>SD646</td></tr>
<tr><td>SD647</td><td>File register capacity</td><td>File register capacity</td><td>This register stores the data size of the selected file register (unit: 1K word).</td><td>S (Status change)</td><td>New</td><td>Qn(H)
QnPH
QnPRH
QnU*3
LCPU</td></tr>
<tr><td></td><td></td><td></td><td></td><td>S (Initial)</td><td></td><td>Q00J/Q00/Q01</td></tr>
<tr><td>SD648</td><td>File register block number</td><td>File register block number</td><td>This register stores the block number of the selected file register.</td><td>S (Status change)*4</td><td>D9035</td><td>Q00J/Q00/Q01
Qn(H)
QnPH
QnPRH
QnU*3
LCPU</td></tr>
<tr><td>SD650</td><td>Comment drive</td><td>Comment drive number</td><td>This register stores the drive number of the comment selected by the parameter or the QCDSET instruction.</td><td>S (Status change)</td><td>New</td><td>Qn(H)
QnPH
QnPRH
QnU
LCPU</td></tr>
</table>

<table>
<tr><th>Number</th><th>Name</th><th>Meaning</th><th>Explanation</th><th>Set by (When Set)</th><th>Corresponding ACPU D9□□□</th><th>Corresponding CPU</th></tr>
<tr><td>SD651
SD652
SD653
SD654
SD655

SD656</td><td>Comment file name</td><td>Comment file name</td><td>This register stores the file name of the comment selected by the parameter or the QCDSET instruction in ASCII code (with an extension).
<table><tr><th></th><th>b15 to b8</th><th>b7 to b0</th></tr><tr><td>SD651</td><td>2nd character</td><td>1st character</td></tr><tr><td>SD652</td><td>4th character</td><td>3rd character</td></tr><tr><td>SD653</td><td>6th character</td><td>5th character</td></tr><tr><td>SD654</td><td>8th character</td><td>7th character</td></tr><tr><td>SD655</td><td>1st character of the extension</td><td>2E_H(.)</td></tr><tr><td>SD656</td><td>3rd character of the extension</td><td>2nd character of the extension</td></tr></table></td><td>S (Status change)</td><td>New</td><td>Qn(H)
QnPH
QnPRH
QnU
LCPU</td></tr>
<tr><td>SD660</td><td rowspan="7">Boot operation designation file</td><td>Boot designation file drive number</td><td>This register stores the number of a drive where the boot designation file (*.QBT) has been stored.</td><td rowspan="7">S (Initial)</td><td rowspan="7">New</td><td rowspan="7">Qn(H)
QnPH
QnPRH
QnU*2
LCPU</td></tr>
<tr><td>SD661
SD662
SD663
SD664
SD665

SD666</td><td>File name of boot designation file</td><td>This register stores the name of a boot designation file (*.QBT) in ASCII code (with an extension).
<table><tr><th></th><th>b15 to b8</th><th>b7 to b0</th></tr><tr><td>SD661</td><td>2nd character</td><td>1st character</td></tr><tr><td>SD662</td><td>4th character</td><td>3rd character</td></tr><tr><td>SD663</td><td>6th character</td><td>5th character</td></tr><tr><td>SD664</td><td>8th character</td><td>7th character</td></tr><tr><td>SD665</td><td>1st character of the extension</td><td>2E_H(.)</td></tr><tr><td>SD666</td><td>3rd character of the extension</td><td>2nd character of the extension</td></tr></table></td></tr>
<tr><td>SD670</td><td>Parameter enable drive information</td><td>Parameter enable drive No.</td><td>This register stores the number of a drive where valid parameters have been stored.*1
■CPU modules other than the QnUDVCPU and QnUDPVCPU
• 0: Drive 0 (program memory)
• 1: Drive 1 (SRAM card)
• 2: Drive 2 (Flash card/ATA card)
• 4: Drive 4 (standard ROM)
■QnUDVCPU and QnUDPVCPU
• 0: Drive 0 (program memory)
• 2: Drive 2 (SD memory card)
• 3: Drive 3 (standard RAM)
• 4: Drive 4 (standard ROM)
*1 For the Q00UJCPU, Q00UCPU, and Q01UCPU, only drives 0 and 4 are parameter-valid drives.</td><td>S (Initial)</td><td>New</td><td>QnU</td></tr>
<tr><td></td><td></td><td></td><td>This register stores the number of a drive where valid parameters have been stored.*1
• 0: Drive 0 (program memory)
• 2: Drive 2 (SD memory card)
• 4: Drive 4 (standard ROM)
*1 For the L02SCPU and L02SCPU-P, only drives 0 and 4 are parameter-valid drives.</td><td></td><td></td><td>LCPU</td></tr>
</table>

<table>
<tr><th>Number</th><th>Name</th><th>Meaning</th><th>Explanation</th><th>Set by (When Set)</th><th>Corresponding ACPU D9□□□</th><th>Corresponding CPU</th></tr>
<tr><td>SD671</td><td>Status of latch data backup function</td><td>Status display</td><td>This register stores the execution status of latch data backup in the following bit pattern.
<table><tr><th colspan="2">Status</th><th>Presence/ absence of backup data</th><th>Restoration at turning ON power supply in and after the next time</th></tr><tr><td>0</td><td>No backup data</td><td>Absent</td><td>Restoring not executed</td></tr><tr><td>1</td><td>Restore ready completion</td><td rowspan="3">Present</td><td>Restoring executed in the next time power supply is turned ON</td></tr><tr><td>2</td><td>Restore execution completion *1</td><td>Restoring not executed</td></tr><tr><td>3</td><td>Backup execution wait *2</td><td>Restoring not executed</td></tr><tr><td>4</td><td>Restore repeated execution ready completion</td><td>Restoring executed whenever power supply is turned ON</td></tr></table>*1 Indicates status immediately after restoration.
*2 Indicates status after the CPU module is powered off and then on while the CPU module is in the "2: Restore execution completion" status.</td><td>S (Status change)</td><td>New</td><td>QnU
LCPU</td></tr>
<tr><td>SD672</td><td rowspan="4">Backup information</td><td>Backup time (Year and month)</td><td>This register stores the year (last two digits) and the month when data were backed up in 2-digit BCD.
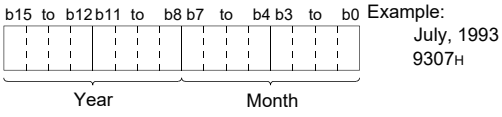
Example:
July, 1993
9307H</td><td rowspan="4">S (At write)</td><td rowspan="4">New</td><td rowspan="4">QnU
LCPU</td></tr>
<tr><td>SD673</td><td>Backup time (Day and hour)</td><td>This register stores the day and the hour when data were backed up in 2-digit BCD.
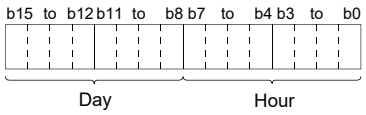
Example:
31st, 10 a.m.
3110H</td></tr>
<tr><td>SD674</td><td>Backup time (Minute and second)</td><td>This register stores the minute and the second when data were backed up in 2-digit BCD.
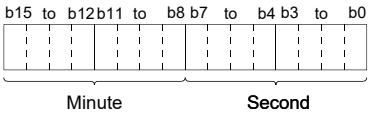
Example:
35 min., 48 sec.
3548H</td></tr>
<tr><td>SD675</td><td>Backup time (Year and day of week)</td><td>This register stores the year (first two digits) and the day of the week when data were backed up in BCD.
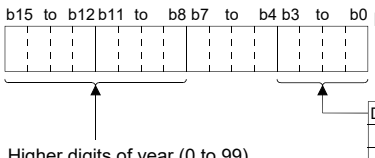
Example:
1993, Friday
1905H
<table><tr><th colspan="2">Day of the week</th></tr><tr><td>0</td><td>Sunday</td></tr><tr><td>1</td><td>Monday</td></tr><tr><td>2</td><td>Tuesday</td></tr><tr><td>3</td><td>Wednesday</td></tr><tr><td>4</td><td>Thursday</td></tr><tr><td>5</td><td>Friday</td></tr><tr><td>6</td><td>Saturday</td></tr></table></td></tr>
</table>

Number	Name	Meaning	Explanation	Set by (When Set)	Corresponding ACPU D9□□□	Corresponding CPU
SD676	Backup data restoration information	Restore time (Year and month)	This register stores the year (last two digits) and the month when data were restored in 2-digit BCD. 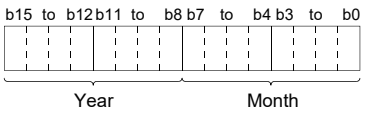	S (Initial)	New	QnU LCPU
SD677		Restore time (Day and time)	This register stores the day and the hour when data were restored in 2-digit BCD. 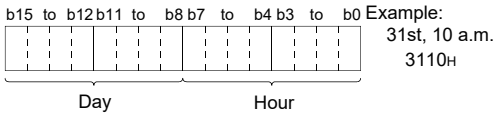			
SD678		Restore time (Minute and second)	This register stores the minute and the second when data were restored in 2-digit BCD. 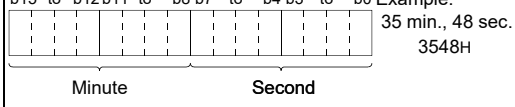			
SD679		Restore time (Year and day of week)	This register stores the year (first two digits) and the day of the week when data were restored in BCD. 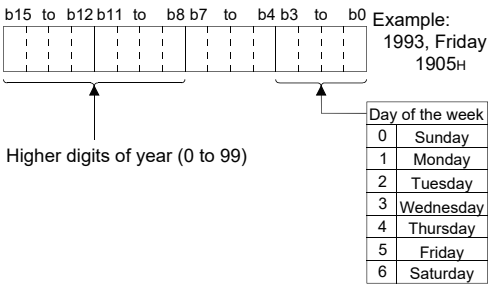			
SD681	Program memory write (transfer) status	Write (transfer) status display (percentage)	This register stores the progress of writing (transfer) to the program memory (flash ROM) in percentage (0 to 100%). When a write (transfer) command is given, "0" is stored in this register.	S (At write)	New	QnU LCPU
SD682 SD683	Program memory write count index	Write count index up to present	This register stores the index value of write count of the program memory (flash ROM)*1 up to the present in 32-bit binary. When the index value exceeds 100 thousand times, "FLASH ROM ERROR" (error code: 1610) occurs. (The index value will be counted even after it exceeds 100 thousand.) *1 The write count does not equal to the index value. (Since the maximum write count of the flash ROM has been increased by the system, 1 is added about every two writing operations.)	S (At write)	New	QnU LCPU
SD686	Standard ROM write (transfer) status	Write (transfer) status display (percentage)	This register stores the progress of writing (transfer) to the standard ROM (flash ROM) in percentage (0 to 100%). When a write (transfer) command is given, "0" is stored in this register.	S (At write)	New	QnU LCPU

Number	Name	Meaning	Explanation	Set by (When Set)	Corresponding ACPU D9□□□	Corresponding CPU
SD687 SD688	Standard ROM write count index	Write count index up to present	This register stores the index value of write count of the standard ROM (flash ROM)*1 up to the present in 32-bit binary. When the index value exceeds 100 thousand times, "FLASH ROM ERROR" (error code: 1610) occurs. (The index value will be counted even after it exceeds 100 thousand.) *1 The write count does not equal to the index value. (Since the maximum write count of the flash ROM has been increased by the system, 1 is added to the index value when the total write data size after the previous count-up reaches about 1M byte.)	S (At write)	New	QnU LCPU
SD689	Backup error factor	Backup error factor	This register stores the cause of an error that occurred during backup. • 0_H: No error • 100_H: Memory card or SD memory card not inserted • 200_H: Backup data size exceeded • 300_H: Write protection set to memory card or SD memory card • 400_H: Memory card or SD memory card write error • 500_H: Backup data read error (program memory) • 503_H: Backup data read error (standard RAM) • 504_H: Backup data read error (standard ROM) • 510_H: Backup data read error (system data) • 600_H: Backup preparation was performed while latch data was being backed up to the standard ROM. • 601_H: Backup preparation was performed during online change. • 602_H: Backup preparation was performed with an FTP client connected to and communicated with the CPU module. • 603_H: Backup preparation was performed while the data logging function was being executed. • 605_H: Backup preparation was performed while the project data batch save/load function was being executed. • 606_H: Backup preparation was performed while any specified file or folder was being deleted using a display unit. • 607_H: Backup preparation was performed while the iQ Sensor Solution function (data backup/restoration) was being executed. • 608_H: Backup preparation was performed while the file transfer function (FTP client) was being executed. • 609_H: Backup preparation was performed while the CPU module data backup function was being executed. • 700_H: A security key is set to the CPU module. • 701_H: Backup preparation was performed when "Execution Program Protection Setting" was enabled with a block password.	S (Error)	New	QnU*1 LCPU
SD690	Backup status	Backup status	Stores the current backup status. • 0: Before backup • 1: Being prepared • 2: Ready • 3: Being executed • 4: Completed • FF: Backup error	S (Status change)	New	QnU*1 LCPU
SD691	Backup execution status	Backup execution status display (percentage)	• This register stores the progress of backup to the memory card or SD memory card in percentage (0 to 100%). • "0" is stored at the start of backup.	S (Status change)	New	QnU*1 LCPU

Number	Name	Meaning	Explanation	Set by (When Set)	Corresponding ACPU D9□□□	Corresponding CPU
SD692	Restoration error factor	Factor of error occurred in restoration	Stores the cause of an error that occurred in restoration. • 800_H: The CPU module model name does not match. • 801_H: The backup data file does not match or reading of backup data from the memory card or SD memory card was not completed. • 810_H: Writing backup data to the restoration drive is not completed. • 811_H: The standard RAM capacity for the restoration is insufficient. • 900_H: A security key is set to the CPU module.	S (Error)	New	QnU*1 LCPU
SD693	Restoration status	Current restoration status	Stores the current restoration status. • 0: Before restoration • 1: Being executed • 2: Completed • FF: Restoration error (In automatic restoration, "0: Before restoration" is stored at the completion of restoration.)	S (Status change)	New	QnU*1 LCPU
SD694	Restoration execution status	Restoration execution status display (Percentage)	• This register stores the progress of restoration to the CPU module in percentage (0 to 100%). • "0" is stored at the start of restoration. In automatic restoration, "0: Before restoration" is stored at the completion of restoration.	S (Status change)	New	QnU*1 LCPU
SD695	Specification of writing to standard ROM instruction count	Specification of writing to standard ROM instruction count	• This register stores the maximum number of executions of the writing to standard ROM instruction (SP.DEVST) per day. • When the number of executions of the writing to standard ROM instruction exceeds the number of times set by SD695, "OPERATION ERROR" (error code: 4113) occurs. • The setting range of this register is 1 to 32767. If "0" or a value outside the range has been set, "OPERATION ERROR" (error code: 4113) occurs at execution of the writing to standard ROM instruction.	U	New	QnU LCPU
SD696 SD697	Available memory in memory card	Available memory in memory card	This register stores a free space value in a memory card in 32-bit binary.	S (Backup in operation)	New	QnU (except the QnUDV and QnUDPV)*1
SD696	Free memory card space at backup	Free memory card space at backup (lower bits)	This register stores a free space value in a SD memory card if the free space is insufficient for storing the backup data and resulting in a backup error. (unit: byte) This register is cleared to "0" when backup is completed.	S (Backup in operation)	New	QnUDV QnUDPV LCPU
SD697		Free memory card space at backup (upper bits)				
SD698	Backup data capacity	Backup data size (lower bits)	This register stores backup data size in 32-bit binary.	S (Backup in operation)	New	QnU*1 LCPU
SD699		Backup data size (upper bits)				

*1 Modules whose serial number (first five digits) is "10102" or later (except the Q00UJCPU, Q00UCPU, and Q01UCPU)
*2 Universal model QCPU except the Q00UJCPU, Q00UCPU, and Q01UCPU
*3 Universal model QCPU except the Q00UJCPU
*4 On the Basic model QCPU, data is set at STOP to RUN or the RESET instruction execution after parameter execution.
*5 Modules whose serial number (first five digits) is "14042" or later
*6 The function can be used with the LCPU only.
*7 The function can be used with the High-speed Universal model QCPU and Universal model Process CPU only.

(7) Instruction-related register

Number	Name	Meaning	Explanation	Set by (When Set)	Corresponding ACPU D9□□□	Corresponding CPU
SD705 SD706	Mask pattern	Mask pattern	Turning SM705 during a block operation enables all data in the block to be processed to masked values according to the mask patterns stored in SD705 (in SD705 and SD706 for double word data).	U	New	Q00J/Q00/Q01 Qn(H) QnPH QnPRH
SD710	String addition to data logging file name	b0 to b9 0: Disabled 1: Enabled b10 to b15 Fixed to 0	• This register stores the status of string addition to data logging file names in the following bit pattern. 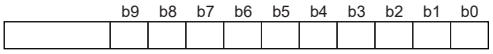 b0: Setting No.1 b1: Setting No.2 to b9: Setting No.10 • At execution of the SP.LOGFILES instruction (Adding a string to data logging file names), when a valid string is specified, a bit corresponding to the relevant setting number turns on. When no character (empty) is specified, a bit corresponding to the relevant setting number turns off.	S (During execution)	New	QnUDV*7 QnUDPV*7
SD711	Instruction error (Adding a string to data logging file names)	b0 to b9 0: No error 1: Error b10 to b15 Fixed to 0	• This register stores the error status of the SP.LOGFILES instruction (Adding a string to data logging file names) in the following bit pattern. 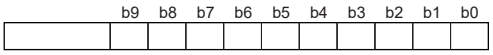 b0: Setting No.1 b1: Setting No.2 to b9: Setting No.10 • When the SP.LOGFILES instruction is executed, a bit corresponding to the relevant setting number turns off. When an error occurs in the instruction, a bit corresponding to the relevant setting number turns on.	S (During execution/ Status change)	New	QnUDV*7 QnUDPV*7
SD712	Next execution of instruction (Adding a string to data logging file names)	b0 to b9 0: Executable 1: Not executable b10 to b15 Fixed to 0	• This register stores the next execution status (whether the SP.LOGFILES instruction (Adding a string to data logging file names) is executable or not at the next execution time) in the following bit pattern. 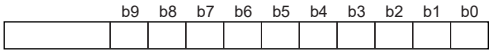 b0: Setting No.1 b1: Setting No.2 to b9: Setting No.10 • After the SP.LOGFILES instruction is executed, a bit corresponding to the relevant setting number turns on when the system accepts the execution of the instruction. When the first stack file is created and the set string is added to name of the data logging file, a bit corresponding to the relevant setting number turns off.	S (Status change)	New	QnUDV*7 QnUDPV*7
SD715 SD716 SD717	IMASK instruction mask pattern	Mask pattern	The mask patterns masked by the IMASK instruction are stored as follows. SD715: I15 to I1 I0 SD716: I31 to I17 I16 SD717: I47 to I33 I32	S (During execution)	New	QCPU LCPU
SD718 SD719	Accumulator	Accumulator	For use as replacement for accumulators used in A series programs.	S/U	New	QCPU LCPU

<table>
<tr><th>Number</th><th>Name</th><th>Meaning</th><th>Explanation</th><th>Set by (When Set)</th><th>Corresponding ACPU D9□□□</th><th>Corresponding CPU</th></tr>
<tr><td>SD720</td><td>Program No. designation for PLOADP instruction</td><td>Program No. designation for PLOADP instruction</td><td>This register stores the program number of the program to read it with the PLOADP instruction. (Specified range: 1 to 124)</td><td>U</td><td>New</td><td>Qn(H)
QnPH</td></tr>
<tr><td>SD738
to
SD769</td><td>Message storage</td><td>Message storage</td><td>This register stores the message specified by the MSG instruction.
<table><tr><th></th><th>b15 to b8</th><th>b7 to b0</th></tr><tr><td>SD738</td><td>2nd character</td><td>1st character</td></tr><tr><td>SD739</td><td>4th character</td><td>3rd character</td></tr><tr><td>SD740</td><td>6th character</td><td>5th character</td></tr><tr><td>SD741</td><td>8th character</td><td>7th character</td></tr><tr><td>SD742</td><td>10th character</td><td>9th character</td></tr><tr><td>SD743</td><td>12th character</td><td>11th character</td></tr><tr><td>SD744</td><td>14th character</td><td>13th character</td></tr><tr><td>SD745</td><td>16th character</td><td>15th character</td></tr><tr><td>SD746</td><td>18th character</td><td>17th character</td></tr><tr><td>SD747</td><td>20th character</td><td>19th character</td></tr><tr><td>SD748</td><td>22nd character</td><td>21st character</td></tr><tr><td>SD749</td><td>24th character</td><td>23rd character</td></tr><tr><td>SD750</td><td>26th character</td><td>25th character</td></tr><tr><td>SD751</td><td>28th character</td><td>27th character</td></tr><tr><td>SD752</td><td>30th character</td><td>29th character</td></tr><tr><td>SD753</td><td>32nd character</td><td>31st character</td></tr><tr><td>SD754</td><td>34th character</td><td>33rd character</td></tr><tr><td>SD755</td><td>36th character</td><td>35th character</td></tr><tr><td>SD756</td><td>38th character</td><td>37th character</td></tr><tr><td>SD757</td><td>40th character</td><td>39th character</td></tr><tr><td>SD758</td><td>42nd character</td><td>41st character</td></tr><tr><td>SD759</td><td>44th character</td><td>43rd character</td></tr><tr><td>SD760</td><td>46th character</td><td>45th character</td></tr><tr><td>SD761</td><td>48th character</td><td>47th character</td></tr><tr><td>SD762</td><td>50th character</td><td>49th character</td></tr><tr><td>SD763</td><td>52nd character</td><td>51st character</td></tr><tr><td>SD764</td><td>54th character</td><td>53rd character</td></tr><tr><td>SD765</td><td>56th character</td><td>55th character</td></tr><tr><td>SD766</td><td>58th character</td><td>57th character</td></tr><tr><td>SD767</td><td>60th character</td><td>59th character</td></tr><tr><td>SD768</td><td>62nd character</td><td>61st character</td></tr><tr><td>SD769</td><td>64th character</td><td>63rd character</td></tr></table></td><td>S (During execution)</td><td>New</td><td>Qn(H)</td></tr>
<tr><td>SD774</td><td rowspan="2">PID limit setting (for complete derivative)</td><td rowspan="2">0: With limit
1: Without limit</td><td>This register stores the limit of each PID loop as shown below.
<table><tr><th></th><th>b15 to b8</th><th>b7</th><th>to</th><th>b1</th><th>b0</th></tr><tr><td>SD774</td><td></td><td>Loop8</td><td>to</td><td>Loop2</td><td>Loop1</td></tr></table></td><td rowspan="2">U</td><td rowspan="2">New</td><td>Q00J/Q00/Q01*1</td></tr>
<tr><td>SD774
to
SD775</td><td>This register stores the limit of each PID loop as shown below.
<table><tr><th></th><th>b15</th><th>to</th><th>b1</th><th>b0</th></tr><tr><td>SD774</td><td>Loop16</td><td>to</td><td>Loop2</td><td>Loop1</td></tr><tr><td>SD775</td><td>Loop32</td><td>to</td><td>Loop18</td><td>Loop17</td></tr></table></td><td>Qn(H)
QnPRH
QnU
LCPU</td></tr>
</table>

Number	Name	Meaning	Explanation	Set by (When Set)	Corresponding ACPU D9□□□	Corresponding CPU
SD778	Refresh processing selection when the COM/CCOM instruction is executed	b0 to b14 0: Refresh not performed 1: Refresh performed b15 0: Service processing performed 1: Service processing not performed	• Selects whether or not the data is refreshed when the COM instruction is executed. • Designation of SD778 is made valid when SM775 turns ON. 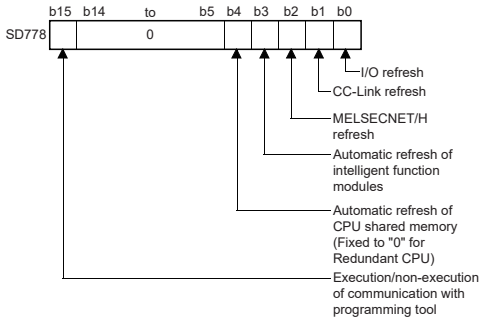 • Refresh between multiple CPUs by the COM instruction is performed under the following conditions. Data reception from another CPU: When b4 of SD778 is "1" Data transmission from host CPU: When b15 of SD778 is "0"	U	New	Q00J/Q00/Q01[*1] Qn(H)[*2]
	Refresh processing selection when the COM/CCOM instruction is executed	b0 to b14 0: Refresh not performed 1: Refresh performed b15 0: Service processing performed 1: Service processing not performed	• Select whether or not each processing is performed when the COM instruction is executed. • Designation of SD778 is made valid when SM775 turns ON. 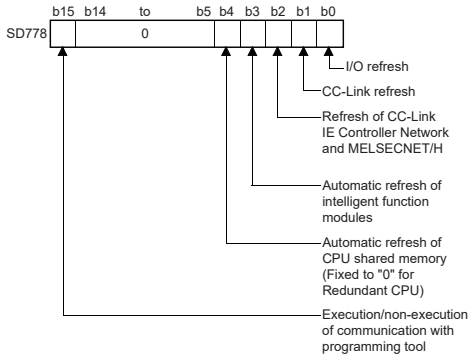 • Refresh between multiple CPUs by the COM instruction is performed under the following conditions. Data reception from another CPU: When b4 of SD778 is "1" Data transmission from host CPU: When b15 of SD778 is "0" • When b2 of SD778 is 1, both CC-Link IE Controller Network and MELSECNET/H perform a refresh. Therefore, when refresh point is large, processing time for the COM instruction is extended.	U	New	Qn(H)[*4] QnPH[*3] QnPRH

Number	Name	Meaning	Explanation	Set by (When Set)	Corresponding ACPU D9□□□	Corresponding CPU
SD778	Refresh processing selection when the COM/CCOM instruction is executed	b0 to b6, b13 0: Refresh not performed 1: Refresh performed b15 0: Service processing performed 1: Service processing not performed	• Select whether to perform each processing or not when the COM/CCOM instruction is executed. • The specification in this register is effective when SM775 is on. 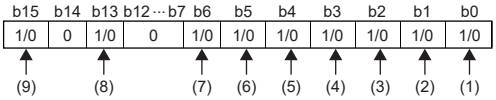 (1)I/O refresh (2)CC-Link refresh (3)CC-Link IE Controller Network and MELSECNET/H refresh (4)Intelligent function module refresh (5)Auto refresh using the QCPU standard area and I/O sharing of the multiple CPU system (6)Auto refresh using the multiple CPU high speed transmission area of the multiple CPU system (7)CC-Link IE Field Network refresh (8)CC-Link IE Field Network Basic refresh (9)Service processing (data communications with the programming tool, GOT, or other external devices)	U	New	QnU
	Refresh processing selection when the COM/CCOM instruction is executed	b0, b1, b3, b6, b13 (Default: 0) 0: Refresh not performed 1: Refresh performed b14 0: Data communications with the display unit not performed 1: Data communications with the display unit performed b15 0: Service processing performed 1: Service processing not performed	• Select whether to perform each processing or not when the COM/CCOM instruction is executed. • The specification in this register is effective when SM775 is on. 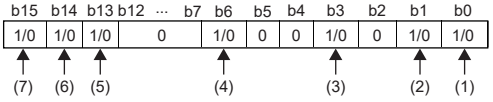 (1)I/O refresh (2)CC-Link refresh (3)Intelligent function module refresh (4)CC-Link IE Field Network refresh (5)CC-Link IE Field Network Basic refresh (6)Data communications with the display unit (7)Service processing (data communications with the programming tool, GOT, or other external devices)	U	New	LCPU

<table>
<tr><th>Number</th><th>Name</th><th>Meaning</th><th>Explanation</th><th>Set by (When Set)</th><th>Corresponding ACPU D9□□□</th><th>Corresponding CPU</th></tr>
<tr><td>SD781
to
SD785</td><td rowspan="2">Mask pattern of IMASK instruction</td><td rowspan="2">Mask pattern</td><td>The mask patterns masked by the IMASK instruction are stored as follows.
<table><tr><th></th><th>b15</th><th></th><th>b1</th><th>b0</th></tr><tr><td>SD781</td><td>I63</td><td>to</td><td>I49</td><td>I48</td></tr><tr><td>SD782</td><td>I79</td><td>to</td><td>I65</td><td>I64</td></tr><tr><td>to</td><td colspan="4">to</td></tr><tr><td>SD785</td><td>I127</td><td>to</td><td>I113</td><td>I112</td></tr></table></td><td rowspan="2">S (During execution)</td><td rowspan="2">New</td><td>Q00J/Q00/Q01</td></tr>
<tr><td>SD781
to
SD793</td><td>The mask patterns masked by the IMASK instruction are stored as follows.*1
<table><tr><th></th><th>b15</th><th></th><th>b1</th><th>b0</th></tr><tr><td>SD781</td><td>I63</td><td>to</td><td>I49</td><td>I48</td></tr><tr><td>SD782</td><td>I79</td><td>to</td><td>I65</td><td>I64</td></tr><tr><td></td><td colspan="4">to</td></tr><tr><td>SD793</td><td>I255</td><td>to</td><td>I241</td><td>I240</td></tr></table>*1: The Q00UJCPU, Q00UCPU, and Q01UCPU cannot use SD786 to SD793.</td><td>Qn(H)
QnPH
QnPRH
QnU
LCPU</td></tr>
<tr><td>SD794</td><td rowspan="2">PID limit setting (for incomplete derivative)</td><td rowspan="2">0: With limit
1: Without limit</td><td>This register stores the limit of each PID loop as shown below.
<table><tr><th></th><th>b15</th><th>to</th><th>b8</th><th>b7</th><th>to</th><th>b1</th><th>b0</th></tr><tr><td>SD794</td><td colspan="2"></td><td>Loop8</td><td>to</td><td>Loop2</td><td>Loop1</td></tr></table></td><td rowspan="2">U</td><td rowspan="2">New</td><td>Q00J/Q00
/Q01*1</td></tr>
<tr><td>SD794
to
SD795</td><td>This register stores the limit of each PID loop as shown below.
<table><tr><th></th><th>b15</th><th>to</th><th>b1</th><th>b0</th></tr><tr><td>SD794</td><td>Loop16</td><td>to</td><td>Loop2</td><td>Loop1</td></tr><tr><td>SD795</td><td>Loop32</td><td>to</td><td>Loop18</td><td>Loop17</td></tr></table></td><td>Qn(H)*4
QnPRH
QnU
LCPU</td></tr>
</table>

Number	Name	Meaning	Explanation	Set by (When Set)	Corresponding ACPU D9□□□	Corresponding CPU
SD796	Maximum number of blocks used for the multiple CPU high-speed transmission dedicated instruction (for CPU No.1)	Range of the maximum number of blocks: 1 to 7 (default: 2) If the number out of the range is set, the number 7 is set.*6	Specifies the maximum number of blocks used for the multiple CPU high-speed transmission dedicated instruction (target CPU=CPU No.1). When the multiple CPU high-speed transmission dedicated instruction is executed to the CPU No.1, and the number of empty blocks of the dedicated instruction transmission area is less than the setting value of this register, SM796 is turned ON, which is used as the interlock signal for consecutive execution of the multiple CPU high-speed transmission dedicated instruction.	U (At 1 scan after RUN)	New	QnU*5
SD797	Maximum number of blocks used for the multiple CPU high-speed transmission dedicated instruction (for CPU No.2)		Specifies the maximum number of blocks used for the multiple CPU high-speed transmission dedicated instruction (target CPU=CPU No.2). When the multiple CPU high-speed transmission dedicated instruction is executed to the CPU No.2, and the number of empty blocks of the dedicated instruction transmission area is less than the setting value of this register, SM797 is turned ON, which is used as the interlock signal for consecutive execution of the multiple CPU high-speed transmission dedicated instruction.			
SD798	Maximum number of blocks used for the multiple CPU high-speed transmission dedicated instruction (for CPU No.3)		Specifies the maximum number of blocks used for the multiple CPU high-speed transmission dedicated instruction (target CPU=CPU No.3). When the multiple CPU high-speed transmission dedicated instruction is executed to the CPU No.3, and the number of empty blocks of the dedicated instruction transmission area is less than the setting value of this register, SM798 is turned ON, which is used as the interlock signal for consecutive execution of the multiple CPU high-speed transmission dedicated instruction.			
SD799	Maximum number of blocks used for the multiple CPU high-speed transmission dedicated instruction for CPU No.4)		Specifies the maximum number of blocks used for the multiple CPU high-speed transmission dedicated instruction (target CPU=CPU No.4). When the multiple CPU high-speed transmission dedicated instruction is executed to the CPU No.4, and the number of empty blocks of the dedicated instruction transmission area is less than the setting value of this register, SM799 is turned ON, which is used as the interlock signal for consecutive execution of the multiple CPU high-speed transmission dedicated instruction.			

*1 Modules whose function version B or later
*2 Modules whose serial number (first five digits) is "04012" or later
*3 Modules whose serial number (first five digits) is "07032" or later
*4 Modules whose serial number (first five digits) is "09012" or later
*5 Universal model QCPU except the Q00UJCPU, Q00UCPU, Q01UCPU, and Q02UCPU
*6 The range is 1 to 9 (default: 2) for the Q03UDCPU, Q04UDHCPU, and Q06UDHCPU whose serial number (first five digits) is "10012" or earlier. If the number out of the range is set, the number 9 is set.
*7 Modules whose serial number (first five digits) is "20073" or later

(8) Debugging

Number	Name	Meaning	Explanation	Set by (When Set)	Corresponding ACPU D9□□□	Corresponding CPU
SD830	Real-time monitor free buffer capacity	Real-time monitor free buffer capacity (K bytes)	The free buffer capacity of realtime monitor is stored in units of K bytes. A smaller value leads to a higher probability of the occurrence of processing overflow.	S (Status change)	New	LCPU*2
SD840	Debug function usage	Debug function usage	This register indicates the status of the debug function usage as shown below. 0: Forced on/off for external I/O 1: Executional conditioned device test 2 to 15: Empty (fixed at 0) 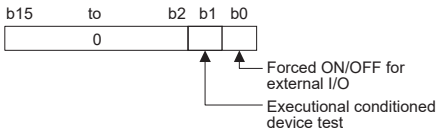 (0: Not used, 1: Used)	S (Status change)	New	QnU*1 LCPU

*1 Modules whose serial number (first five digits) is "10042" or later

*2 Built-in Ethernet port LCPU whose serial number (first five digits) is "16072" or later

(9) Latch area

Number	Name	Meaning	Explanation	Set by (When Set)	Corresponding ACPU D9□□□	Corresponding CPU
SD909	Auto loading target folder number	Auto loading target folder number	This register is used to specify the number of the folder targeted for auto loading. 0 (default):"AutoLoad" folder 1 to 99:"AutoLoad**" folder (The folder number can be specified at ** (01 to 99).) The value 0 is stored upon successful completion of auto loading.	S (When auto loading is completed)/ U	New	LCPU*3
SD910	CPU module data backup/ restoration function (backup function)	Backup function setting	Set the execution timing of automatic backup with bit pattern. (OFF: Invalid, ON: Valid) 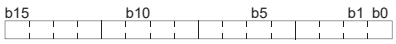 b0: Automatic backup setting by specification of day and time b1: Automatic backup setting by specification of time and day of the week b5: Upper limit status setting for the number of backup data*5 b10: Retry execution for the automatic backup*5 b15: Setting for the automatic backup at occurrence of the CPU stop error (Multiple execution timings can be set.)	U	New	QnUDV*4 QnUDPV*4
SD912		Day and time setting for automatic backup [day]	Set the day when an automatic backup by specification of day and time is operated in BCD. 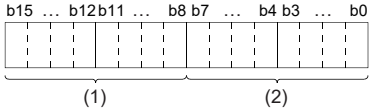 (1) Fixed to 00 (2) Day (1 to 31) Example:On the 15th of each month, SD912 = 0015_H			

Number	Name	Meaning	Explanation	Set by (When Set)	Corresponding ACPU D9□□□	Corresponding CPU
SD913	CPU module data backup/ restoration function (backup function)	Day and time setting for automatic backup [hour and minute]	Set the hour and minute when an automatic backup by specification of the day and time is operated in BCD. 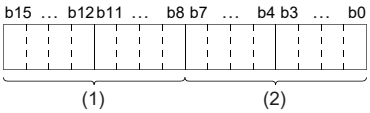 (1) Hour (0 to 23) (2) Minute (0 to 59) Example:For 8:30, SD913 = 0830_H	U	New	QnUDV*4 QnUDPV*4
SD914		Time and day of the week setting for automatic backup [hour and minute]	Set the hour and minute when an automatic backup by specification of the time and day of the week is operated in BCD. 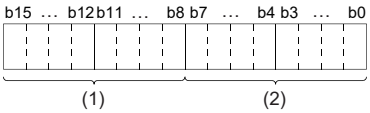 (1) Hour (0 to 23) (2) Minute (0 to 59) Example:For 8:30, SD914 = 0830_H			
SD915		Time and day of the week setting for automatic backup [day of the week]	Set the day of the week when an automatic backup by specification of the time and day of the week is operated in the following bit pattern. (OFF: Invalid, ON: Valid) 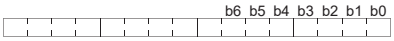 b0: Sunday, b1: Monday, b2: Tuesday, b3: Wednesday, b4: Thursday, b5: Friday, b6: Saturday (Multiple setting can be set simultaneously)			
SD916		Cause of error occurred at backup	This register stores the cause of an error that occurred during backup. 0_H: No error Other than 0_H: Error code (☞ Page 433, Appendix 1.11) ("0" is stored at start of a backup of the CPU module.)	S (Error)		
SD917	CPU module data backup/ restoration function (restoration function)	Restoration target data setting	Set the data to be restored. 0: Whole target data 1: Device data only 2: Whole target data except for device data	U	New	QnUDV*4 QnUDPV*4
SD918		Restoration function setting	Set the restoration method with bit pattern. (OFF: Invalid, ON: Valid) 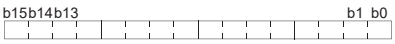 b0: Automatic restoration setting b1: Setting for the format at the automatic restoration b13: Restoration setting for the latest data b14: Restoration setting for the special relay and special register b15: Setting for the continuous operation from the state at backup			
SD919		Restoration target folder [year]	Set the date stamp folder to be restored in BCD. 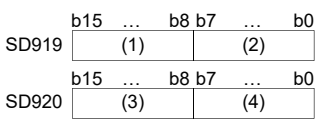 (1) Year (first two digits) (0 to 99) (2) Year (last two digits) (0 to 99) (3) Month (1 to 12) (4) Day (1 to 31) Example:For the date stamp folder "20150615", SD919 = 2015_H, SD920 = 0615_H.			
SD920		Restoration target folder [month and day]				

<table>
<tr><th>Number</th><th>Name</th><th>Meaning</th><th>Explanation</th><th>Set by (When Set)</th><th>Corresponding ACPU D9□□□</th><th>Corresponding CPU</th></tr>
<tr><td>SD921</td><td rowspan="3">CPU module data backup/ restoration function (restoration function)</td><td>Restoration target folder [Number]</td><td>Set the target folder to be restored.
1 to 32767:Serial number of the backup folder in the date stamp folder (00001 to 32767)</td><td>U</td><td rowspan="2">New</td><td rowspan="2">QnUDV*4
QnUDPV*4</td></tr>
<tr><td>SD922</td><td>Cause of error occurred during restoration</td><td>Store an error code of the error occurred during restoration.
0_H: No error
Other than 0_H: Error code (☞ Page 433, Appendix 1.11)
("0" is stored at start of a restoration of the CPU module.)</td><td>S (Error)</td></tr>
<tr><td>SD923</td><td>Upper limit value status for the number backup data</td><td>This register stores the value (1 to 100) that is set to SD1928.
If bit5 of SD910 is off, 0 is stored.</td><td>S (Status change)</td><td>New</td><td>QnUDV*5
QnUDPV*5</td></tr>
<tr><td>SD927</td><td rowspan="2">Device information during "RAM ERROR" (error code: 1161)</td><td>Device name</td><td>This register stores the device name that detected device memory data change.
<table><tr><th>Value</th><th>Device name</th><th>Value</th><th>Device name</th><th>Value</th><th>Device name</th></tr><tr><td>0</td><td>undetected</td><td>8</td><td>L</td><td>16</td><td>C (contact, coil)</td></tr><tr><td>1</td><td rowspan="2">Device used by system</td><td>9</td><td>B</td><td>17</td><td>T (current value)</td></tr><tr><td>2</td><td>10</td><td>F</td><td>18</td><td>ST (current value)</td></tr><tr><td>3</td><td>SM</td><td>11</td><td>SB</td><td>19</td><td>C (current value)</td></tr><tr><td>4</td><td>SD</td><td>12</td><td>V</td><td>20</td><td>D</td></tr><tr><td>5</td><td>X</td><td>13</td><td>S</td><td>21</td><td>W</td></tr><tr><td>6</td><td>Y</td><td>14</td><td>T (contact, coil)</td><td>22</td><td>SW</td></tr><tr><td>7</td><td>M</td><td>15</td><td>ST (contact, coil)</td><td>-1</td><td>unidentified</td></tr></table></td><td rowspan="2">S (Error)</td><td rowspan="2">New</td><td rowspan="2">QnU*1
LCPU*2</td></tr>
<tr><td>SD928</td><td>Device number</td><td>This register stores the device number that detected device memory data change (lower word)

1) Word devices (SD, T (current value), ST (current value), C (current value), D, W, SW)
The device number that detected an error is stored.
Example: When SD927 stores 20 and SD928 stores 10, "RAM ERROR" (error code: 1161) is detected at D10.

2) Bit devices (SM, X, Y, M, L, B, F, SB, V, S)
The device number that detected an error is stored in units of 16 points.
Example: When SD927 stores 9 and SD928 stores 48, "RAM ERROR" (error code: 1161) is detected at any of B30 to B3F.
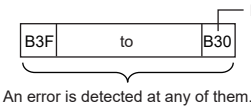

3) T (contact, coil), ST (contact, coil), C (contact, coil)
The device number that detected an error is stored in units of 8 points.
Example: When SD927 stores 14 and SD928 stores 48, "RAM ERROR" (error code: 1161) is detected at any of T48 to T55.
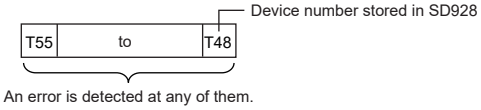

4) When the device number cannot be determined
"0" (fixed value) is stored.</td></tr>
</table>

*1 Modules whose serial number (first five digits) is "13022" or later
*2 Modules whose serial number (first five digits) is "13102" or later
*3 Modules whose serial number (first five digits) is "14042" or later
*4 Modules whose serial number (first five digits) is "17103" or later
*5 Modules whose serial number (first five digits) is "18052" or later

(10)Redundant CPU information (host system CPU information[*1])

Number	Name	Meaning	Explanation	Set by (When Set)	Corresponding ACPU D9□□□	Corresponding CPU
SD952	History of memory copy from control system to standby system	Latest status of memory copy from control system to standby system	This register stores a value indicating the completion status of the latest memory data copy from the control system to the standby system. 1) The value same as the SD1596 value is stored at completion or abend of the memory data copy from the control system to the standby system. 2) Since data have been backed up in case of power failure, this register holds the value indicating the latest memory data copy status from the control system to the standby system. 3) This register is cleared to 0 by latch clear.	S (Status change)	New	QnPRH

*1 The information of the host CPU module is stored.

(11)Remote password count

Number	Name	Meaning	Explanation	Set by (When Set)	Corresponding ACPU D9□□□	Corresponding CPU
SD979	Direct MELSOFT connection	Count of unlock processing failures	This register stores the number of mismatched password entries. Range: 0 to $0FFFE_H$ ($0FFFF_H$ when the range is exceeded)	S (Status change)	New	QnU[*1] LCPU[*1]
SD980 to SD995	Connection 1 to 16					
SD997	MELSOFT connection using UDP port					
SD998	MELSOFT connection using TCP port					
SD999	FTP communication port					

*1 Built-in Ethernet port QCPU and Built-in Ethernet port LCPU

(12)Conversion from A series to Q or L series

The special register (D9000 to D9255) for ACPU corresponds to the special register (SD1000 to SD1255) for QCPU or LCPU after the A to Q/L conversion. (Note that the Basic model QCPU and Redundant CPU do not support the A to Q/L conversion.)

All data in this area of the special register are set by system (cannot be set by user using a program). To set data by user, correct the program using the special register for QCPU or LCPU. The special register (D9200 to D9255), however, includes the areas that can be set by user. For those areas, data can be set by user in the converted special register (SD1200 to SD1255) as well. For details on the special register for ACPU, refer to the following.

User's manual for the CPU module used

Type MELSECNET, MELSECNET/B Data Link System Reference Manual

Point

To use the converted special register in the High Performance model QCPU, Process CPU, Universal model QCPU, or LCPU, check "Use special relay/special register from SM/SD1000" under "A-PLC Compatibility Setting".

Project window ⇨ [Parameter] ⇨ [PLC Parameter] ⇨ [PLC System]

Note that the processing time will increase when the converted special register is used.

[How to read the Special Register for Modification column]

- If the special register number for QCPU or LCPU is provided, correct the program using it.
- — means that the converted special register can be used.
- ☒ means that the special register cannot be used in QCPU or LCPU.

<table>
<tr><th>ACPU special register</th><th>Special register after conversion</th><th>Special register after modification</th><th>Name</th><th>Meaning</th><th>Explanation</th><th>Corresponding CPU</th></tr>
<tr><td>D9000</td><td>SD1000</td><td>—</td><td>Fuse blown</td><td>Number of module with blown fuse</td><td>• If a module with blown fuse is detected, the lowest first I/O number of the module is stored in hexadecimal. (Example: If a fuse blown is occurred in the output module with output number Y50 to Y6F, "50" is stored in hexadecimal.) To monitor the number by a programming tool, monitor in hexadecimal. (This register is cleared when contents in SD1100 to SD1107 are all reset to "0".)
• Output modules on remote I/O stations are also checked for blown fuse.</td><td>Qn(H)
QnPH
QnU*1
LCPU*2</td></tr>
<tr><td>D9001</td><td>SD1001</td><td>—</td><td>Fuse blown</td><td>Number of module with blown fuse</td><td>• If any fuse is blown, this register stores a number corresponding to each setting switch number or to slot number of the base unit.
<table>
<tr><th colspan="2">AJ02 I/O module</th><th colspan="2">Extension base unit</th></tr>
<tr><th>Setting switch</th><th>Stored data</th><th>Base unit slot No.</th><th>Stored data</th></tr>
<tr><td>0</td><td>0</td><td>0</td><td>4</td></tr>
<tr><td>1</td><td>1</td><td>1</td><td>5</td></tr>
<tr><td>2</td><td>2</td><td>2</td><td>6</td></tr>
<tr><td>3</td><td>3</td><td>3</td><td>7</td></tr>
<tr><td>4</td><td>4</td><td></td><td></td></tr>
<tr><td>5</td><td>5</td><td></td><td></td></tr>
<tr><td>6</td><td>6</td><td></td><td></td></tr>
<tr><td>7</td><td>7</td><td></td><td></td></tr>
</table>
• For the remote I/O station, the value of (module I/O No./10_H) + 1 is stored.</td><td>Qn(H)
QnPH</td></tr>
</table>

ACPU special register	Special register after conversion	Special register after modification	Name	Meaning	Explanation	Corresponding CPU
D9002	SD1002	—	I/O module verify error	I/O module verify error module number	• If the status of the I/O modules changes from that obtained at power-on, the lowest first I/O number of the module is stored in hexadecimal. (Example: If a module verification error is occurred on the output module with output numbers Y50 to Y6F, "50" is stored in hexadecimal.) To monitor the number by a programming tool, monitor in hexadecimal. (This register is cleared when contents in SD1116 to SD1123 are all reset to "0".) • I/O module verification is conducted on I/O modules on remote I/O stations.	Qn(H) QnPH QnU*1 LCPU
D9005	SD1005	-	AC DOWN counter	Number of times for AC DOWN	• A value stored in this register is incremented by one whenever the input voltage falls to or below 85% (AC power) or 65% (DC power) of the rating during operation of the CPU module. • The counter starts the routine: counts up from 0 to 32767, then counts down to -32768 and then again counts up to 0.	Qn(H) QnPH QnU*1 LCPU
D9008	SD1008	SD0	Self-diagnostic error	Self-diagnostic error number	This register stores the error code of an error detected by self-diagnostics.	Qn(H) QnPH QnU*1 LCPU
D9009	SD1009	SD62	Annunciator detection	F number at which external failure has occurred	• When any of F0 to F2047 (default device setting) is turned on by the OUT F or SET F instruction, the F number that has been detected earliest among the F numbers that have turned on is stored in BIN code. • SD1009 can be cleared by RST F or LEDR instruction. If another F number has been detected, the clearing of SD1009 causes the next number to be stored in SD1009.	
D9010	SD1010	×	Error step	Step number at which operation error has occurred.	If an operation error occurred during execution of an application instruction, the number of the step having the error is stored. The contents of SD1010 are updated upon every operation error.	Qn(H) QnPH
D9011	SD1011	×		Step number at which operation error has occurred.	If an operation error occurred during execution of an application instruction, the number of the step having the error is stored. Because the step number is stored in SD1011 when SM1011 turns from off to on, the data in SD1011 are not updated unless SM1011 is cleared by a user program	
D9014	SD1014	×	I/O control mode	I/O control mode number	The I/O control mode that has been set is returned in any of the following numbers. • 0:Both input and output in direct mode • 1:Input in refresh mode, output in direct mode • 3:Both input and output in refresh mode	Qn(H) QnPH
D9015	SD1015	SD203	Operating status of CPU	Operating status of CPU	Operation status of a CPU module is stored as shown below. 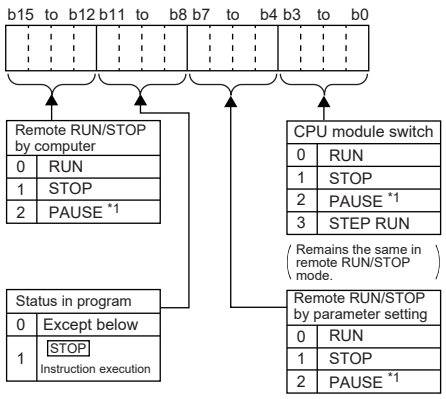 *1 For the High Performance model QCPU and Process CPU, if the CPU module is running and SM1040 is off, the CPU module remains in the RUN status even though it is set to the PAUSE status.	Qn(H) QnPH QnU*1 LCPU

ACPU special register	Special register after conversion	Special register after modification	Name	Meaning	Explanation	Corresponding CPU
D9016	SD1016	×	Program number	0: Main program (ROM) 1: Main program (RAM) 2: Subprogram 1 (RAM) 3: Subprogram 2 (RAM) 4: Subprogram 3 (RAM) 5: Subprogram 1 (ROM) 6: Subprogram 2 (ROM) 7: Subprogram 3 (ROM) 8: Main program (E^2PROM) 9: Subprogram 1 (E^2PROM) A: Subprogram 2 (E^2PROM) B: Subprogram 3 (E^2PROM)	This register stores any of the values from 0 to B, indicating which program is currently running.	Qn(H) QnPH
D9017	SD1017	SD524	Scan time	Minimum scan time (10ms units)	If a scan time value is smaller than the value in SD1017, the SD1017 value is updated in the END processing. Therefore the minimum value of scan time is stored in SD1017.	Qn(H) QnPH QnU*1 LCPU
D9018	SD1018	SD520		Scan time (10ms units)	This register stores a scan time in every END processing.	
D9019	SD1019	SD526		Maximum scan time (10ms units)	If a scan time value is greater than the value in SD1019, the SD1019 value is updated in END processing. Therefore the maximum value of scan time is stored in SD1019.	
D9020	SD1020	×	Constant scan	Constant scan time (User sets in 10ms units)	This register stores an interval value in units of 10ms to run a program at regular intervals. • 0: No constant scan function • 1 to 200: Constant scan function available (executing at an interval of setting value × 10ms)	Qn(H) QnPH
D9021	SD1021	—	Scan time	Scan time (1ms units)	This register stores scan time in every END processing.	Qn(H) QnPH QnU*1 LCPU
D9022	SD1022	SD412	1 second counter	Count in units of 1s.	• The value is incremented by one every second after RUN. • The counter starts the routine: counts up from 0 to 32767, then counts down to -32768 and then again counts up to 0.	Qn(H) QnPH QnU*1 LCPU
D9025	SD1025	—	Clock data	Clock data (year, month)	This register stores the year (last two digits) and month in BCD as shown below. 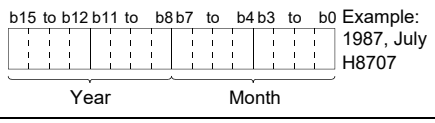 Example: 1987, July H8707	Qn(H) QnPH QnU*1 LCPU

ACPU special register	Special register after conversion	Special register after modification	Name	Meaning	Explanation	Corresponding CPU
D9026	SD1026	—	Clock data	Clock data (day, hour)	This register stores the day and hour in BCD as shown below. 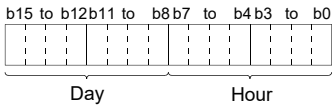	Qn(H) QnPH QnU*1 LCPU
D9027	SD1027	—	Clock data	Clock data (minute, second)	This register stores the minute and the second in BCD as shown below. 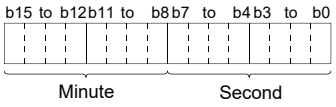	Qn(H) QnPH QnU*1 LCPU
D9028	SD1028	—	Clock data	Clock data (day of week)	This register stores the day of the week in BCD as shown below. 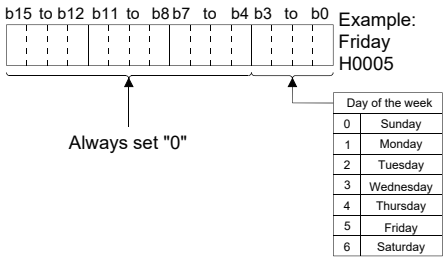	Qn(H) QnPH QnU*1 LCPU
D9035	SD1035	SD648	Extension file register	Use block No.	Stores the block No. of the extension file register being used in BCD code.	Qn(H) QnPH QnU*1 LCPU
D9036	SD1036	×	Extension file register for designation of device number	Device number when individual devices from extension file register are directly accessed	Designate the device number for the extension file register for direct read and write in 2 words at SD1036 and SD1037 in BIN data. Use consecutive numbers beginning with R0 of block No. 1 to designate device numbers. 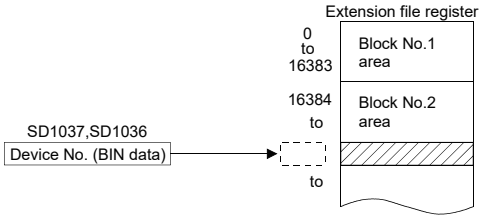	Qn(H) QnPH
D9037	SD1037	×				
D9038	SD1038	SD207	LED display priority ranking	Priorities 1 to 4	• This register stores priority of errors to be indicated by the ERROR LED (on or flashing). • Configuration of the priority setting areas is as shown below. 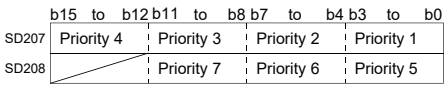 • For details, refer to the following. User's manual of the CPU module used Type ACPU/QCPU-A (A Mode) Programming Manual (Fundamentals)	Qn(H) QnPH
D9039	SD1039	SD208		Priorities 5 to 7		
D9044	SD1044	×	For sampling trace	Step or time during sampling trace	To operate the STRA or STRAR instruction of a sampling trace by turning on or off SM803 with a programming tool, use the value stored in SD1044 as the sampling trace condition. • When "Each scan" is selected: 0 • When a timing is specified: setting value (Unit: 10ms)	Qn(H) QnPH

ACPU special register	Special register after conversion	Special register after modification	Name	Meaning	Explanation	Corresponding CPU
D9049	SD1049	×	Work area for SFC	Block number of extension file register	• This register stores the block No. of the extended file register used as a work area for executing the SFC program. • This register stores "0" when SM320 is off and when empty area of 16K bytes or smaller is used (16K byte or less is too small to be used as block No.1 for an extended file register).	Qn(H) QnPH
D9050	SD1050	×	SFC program error number	Error code generated by SFC program	This register stores an error code of the error occurred in the SFC program. • 0: No error • 80: SFC program parameter error • 81: SFC code error • 82: Number of steps of simultaneous execution exceeded • 83: Block start error • 84: SFC program operation error	Qn(H) QnPH
D9051	SD1051	×	Error block	Block number where error occurred	This register stores the number of the block in the SFC program where an error occurred. For error 83, the number of the block where the program was started is stored.	Qn(H) QnPH
D9052	SD1052	×	Error step	Step number where error occurred	• This register stores the number of the step in the SFC program where error 83 occurred. • For error 80, 81, and 82, "0" is stored. • For error 83, the block starting step number is stored.	Qn(H) QnPH
D9053	SD1053	×	Error transition	Transition condition number where error occurred	This register stores the number of the transition condition in the SFC program where error code 84 occurred. For error codes 80, 81, 82, and 83, "0" is stored.	Qn(H) QnPH
D9054	SD1054	×	Error sequence step	Sequence step number where error occurred	This register stores the sequence step number of transfer condition and operation output in the SFC program where error 84 occurred.	Qn(H) QnPH
D9055	SD1055	SD812	Status latch execution step number	Status latch execution step number	• This register stores the number of the step where a status latch was executed. • When a status latch was executed in a main sequence program, the step No. is stored. • When a status latch was executed in a SFC program, the block number and step number are stored. 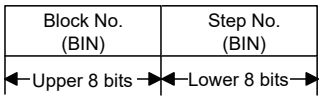	Qn(H) QnPH
D9072	SD1072	×	PLC communication check	Data check of serial communication module	The serial communication module automatically reads and writes data in a single loopback test to perform communication check.	Qn(H) QnPH
D9085	SD1085	×	Register for setting time check value	1s to 65535s	Sets the time check time of the data link instructions (ZNRD, ZNWR) for the MELSECNET/10. • Setting range: 1s to 65535s (1 to 65535) • Unit: second • Default: 10s (If 0 has been set)	Qn(H) QnPH
D9090	SD1090	×	Microcomputer subroutine input data area start device number	Depends on microcomputer package.	For details, refer to the following. 📖 Manual for respective microcomputer package	Qn(H) QnPH
D9091	SD1091	×	Detailed error code	Self-diagnosis detailed error code	This register stores description of the error cause of an instruction error.	Qn(H) QnPH QnU[*1] LCPU

ACPU special register	Special register after conversion	Special register after modification	Name	Meaning	Explanation	Corresponding CPU
D9094	SD1094	SD251	Start I/O number of I/O module to be replaced	Start I/O number of I/O module to be replaced	This register stores the first two digits of the start I/O number of an I/O module, which is to be removed and mounted online (with power on). Example) Input module with I/O No. X2F0 → H2F	Qn(H) QnPH
D9095	SD1095	SD200	DIP switch information	DIP switch information	This register stores a status of the DIP switch of the CPU module in the following format. • 0: OFF • 1: ON 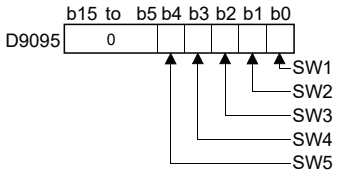	Qn(H) QnPH
D9100	SD1100	—	Fuse blown module	Bit pattern in units of 16 points, indicating the modules whose fuses have blown	• The number of an output module whose fuse has blown is stored in the following bit pattern (in units of 16 points). (If the module numbers are set by parameter, the parameter-set numbers are stored.) 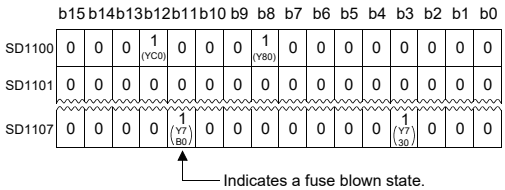 For a module whose number of output points exceeds 16 points, all bits corresponding to output module numbers within the number of output points occupied by the module (in increments of 16 points) turn on. Example: When a 64-point module is mounted on the slot 0, b0 to b3 turn on when the fuse has blown. • Output modules on remote I/O stations are also checked for blown fuse. (This register must be cleared by a program because the bit status remains unchanged even after clearing the error.)	Qn(H) QnPH QnU*1 LCPU*2
D9101	SD1101					
D9102	SD1102					
D9103	SD1103					
D9104	SD1104					
D9105	SD1105					
D9106	SD1106					
D9107	SD1107					
D9108	SD1108	—	Step transfer monitoring timer setting	Timer setting valve and the F number at time out	• This register stores a value set for step transition monitoring timer and the number of an annunciator (F number) that turns on if the monitoring timer times out. 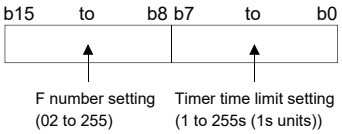 • Turning on any of registers SM1108 to SM1114 activates a monitoring timer. If the transition condition for the step is not established before the timeout time, the annunciator (F) turns on.	Qn(H) QnPH
D9109	SD1109					
D9110	SD1110					
D9111	SD1111					
D9112	SD1112					
D9113	SD1113					
D9114	SD1114					

ACPU special register	Special register after conversion	Special register after modification	Name	Meaning	Explanation	Corresponding CPU
D9116	SD1116	—	I/O module verification error	Bit pattern, in units of 16 points, indicating the modules with verification errors	• If the status of the I/O module changes from that obtained at power-on, the module No. (unit: 16 points) is stored in the following bit pattern. (When I/O module numbers have been set by the parameter, the parameter-set numbers are stored.) 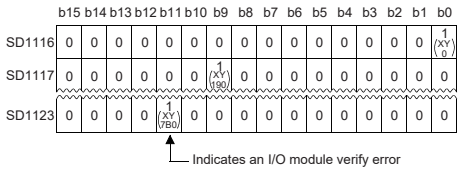 For a module whose number of I/O points exceeds 16 points, all bits corresponding to I/O module numbers within the number of I/O points occupied by the module (in increments of 16 points) turn on. Example: When a 64-point module is mounted on the slot 0, b0 to b3 turn on when an error is detected. • I/O module verification is conducted on I/O modules on remote I/O stations. (If normal status is restored, clear is not performed. Therefore, it is required to perform clear by user program.)	Qn(H) QnPH QnU*1 LCPU
D9117	SD1117					
D9118	SD1118					
D9119	SD1119					
D9120	SD1120					
D9121	SD1121					
D9122	SD1122					
D9123	SD1123					
D9124	SD1124	SD63	Number of annunciator detections	Number of annunciator detections	When any of F0 to F2047 (default device setting) is turned on by the SET F instruction, a value in SD1124 is incremented by one (up to a maximum of 16). When the RST F or LEDR instruction is executed, it is decremented by one.	Qn(H) QnPH QnU*1 LCPU
D9125	SD1125	SD64	Annunciator detection number	Annunciator detection number	When any of F0 to F2047 (default device setting) are turned on by the SET F instruction, the annunciator numbers (F numbers) that are turned on are stored in SD1125 to SD1132 in order. The F numbers turned off by the RST F instruction is deleted from this register, and the F numbers stored after the deleted F numbers are shifted to the previous registers. When the LEDR instruction is executed, the contents of SD1125 to SD1132 are shifted upward by 1. When there are eight annunciator detections, the next one is not stored in SD1125 to SD1132. 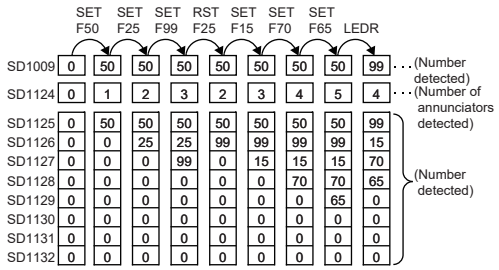 	Qn(H) QnPH QnU*1 LCPU
D9126	SD1126	SD65				
D9127	SD1127	SD66				
D9128	SD1128	SD67				
D9129	SD1129	SD68				
D9130	SD1130	SD69				
D9131	SD1131	SD70				
D9132	SD1132	SD71				

*1 The following modules support these areas:
- Universal model QCPU whose serial number (first five digits) is "10102" or later
- Q00UJCPU, Q00UCPU, Q01UCPU

*2 Modules whose serial number (first five digits) is "16112" or later

(13)Built-in Ethernet port QCPU, built-in Ethernet port LCPU, and built-in Ethernet function

Number	Name	Meaning	Explanation	Set by (When Set)	Corresponding ACPU D9□□□	Corresponding CPU
SD1256	Total number of files to be processed	Total number of files to be processed by the file transfer function	This register stores the total number of files to be processed by the file transfer function (FTP client). The data is stored at the start of the transfer processing.	S (END processing)	New	LCPU[*7]
SD1257	Number of files processed	Number of files processed by the file transfer function	This register stores the number of files processed by the file transfer function (FTP client). The data is cleared to 0 at the start of the transfer processing. The data is incremented by one every time processing of a file is completed.	S (END processing)	New	LCPU[*7]
SD1258	MELSOFT connection extended setting network number	Stores network numbers of the built-in Ethernet port	Network numbers of the built-in Ethernet port set in MELSOFT connection extended setting. (Valid when SM1258 is ON) • 0: Not set • 1 to 239: Network numbers	S (Initial)	New	QnUDV[*8] QnUDPV[*8]
SD1259	MELSOFT connection extended setting station number	Stores station numbers of the built-in Ethernet port	Station numbers of the built-in Ethernet port set in MELSOFT connection extended setting. (Valid only when SM1258 is ON) • 0: Not set • 1 to 64: Station numbers	S (Initial)	New	QnUDV[*8] QnUDPV[*8]
SD1260	IP address in-use	IP address (lower digits)	This register stores an IP address of the built-in Ethernet port.	S (Initial)	New	QnU[*3] LCPU[*6]
SD1261		IP address (upper digits)				
SD1262		Subnet mask pattern (lower digits)	• This register stores a subnet mask pattern of the built-in Ethernet port. • When a subnet mask pattern is not set, "0" is stored.			
SD1263		Subnet mask pattern (upper digits)				
SD1264		Default router IP address (lower digits)	• This register stores a default router IP address of the built-in Ethernet port. • When a default router IP address is not stored, "0" is stored.			
SD1265		Default router IP address (upper digits)				
SD1266	MAC address	MAC address (5th and 6th bytes)	This register stores the MAC address of the built-in Ethernet ports.	S (Initial)	New	QnU[*5] LCPU[*6]
SD1267		MAC address (3rd and 4th bytes)				
SD1268		MAC address (1st and 2nd bytes)				

Number	Name		Meaning	Explanation	Set by (When Set)	Corresponding ACPU D9□□□	Corresponding CPU
SD1270	Time setting function	Operation result	Stores operation result.	This register stores the operation result of the time setting function. • 0: Not executed • 1: Success $0FFFF_H$: Failure	S (Status change)	New	QnU*1 LCPU*1
SD1271		Execution time	Stores time acquired with time setting function.	This register stores the year (last two digits) and the month that the time setting function was executed in 2-digit BCD. 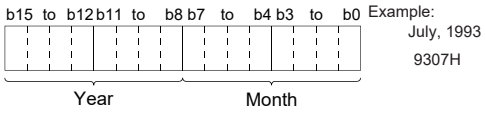			
SD1272				This register stores the day and the hour that the time setting function was executed in a 2-digit BCD. 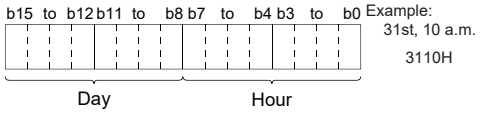			
SD1273				This register stores the minute and the second that the time setting function was executed in a 2-digit BCD. 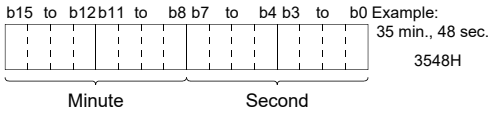			
SD1274				This register stores the year (first two digits) and the day of the week that the time setting was executed in 2-digit BCD. 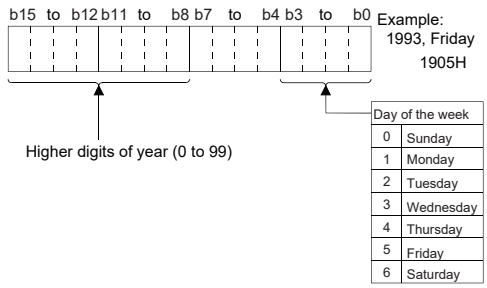			
SD1275		Required response time	Stores time required for clock time acquisition.	This register stores the time required for a clock value to be set on the CPU after being sent to the SNTP server. • Range: A0 to $0FFFE_H$ (Unit: ms) $0FFFF_H$ when the above limit is exceeded. This register stores a value only when the operation is succeeded. (When failed, a previous value remains.)			

Number	Name	Meaning	Explanation	Set by (When Set)	Corresponding ACPU D9□□□	Corresponding CPU
SD1276 SD1277	Forced connection invalidation	Specifies forced connection invalidation.	This register is specified to forcibly invalidate a connection by a program. After being specified invalid, the connection stops communication and does not respond. (When a remote password is used and frequent unlock processing errors occur on a connection, this register is useful for temporarily disabling access.) 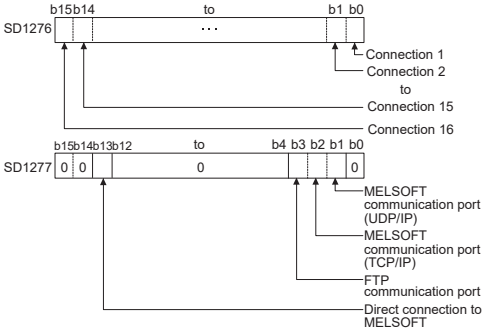 • 0: Valid (default) • 1: Disabled	U	New	QnU*2 LCPU*1
SD1282	Open completion signal	Stores open completion status	This register stores the open completion status of a socket communication or predefined protocol connection ("Open System" parameter: "Socket Communication" or "Predefined Protocol"). Bits for connections other than that of socket communication or predefined protocol are always "0". 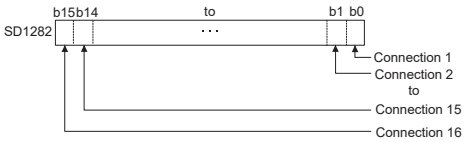 • 0: Open processing is not completed. • 1: Open processing is completed.	S (Status change)	New	QnU*2 LCPU*1
SD1284	Open request signal	Stores open request status	This register stores the open request status of a socket communication or predefined protocol connection. Bits for connections other than that of socket communication or predefined protocol are always "0". 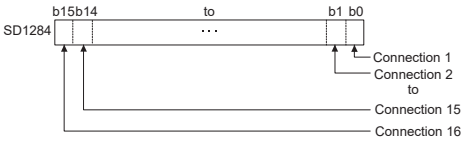 • 0: No open request • 1: In open request	S (Status change)	New	QnU*2 LCPU*1
SD1286	Reception status signal	Stores reception status	This register stores the receive status of a socket communication connection. Bits for connections other than that of socket communication are always "0". 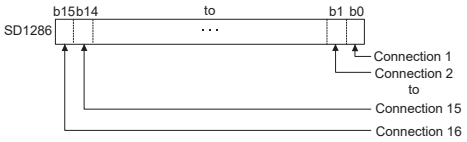 **■TCP (standard receive mode)** • 0: Data not received • 1: Data received **■TCP (fixed-length receive mode)** • 0: Data not received or received data size is not the size of receive buffer. • 1: Received data size reached to the receive buffer size. **■UDP** • 0: Data not received • 1: Data received	S (Status change)	New	QnU*2 LCPU*1

Number	Name	Meaning	Explanation	Set by (When Set)	Corresponding ACPU D9□□□	Corresponding CPU
SD1288	Built-in Ethernet port connection status	Stores connection status of built-in Ethernet port	This register stores a connection status of the built-in Ethernet port. 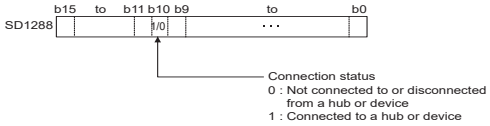 	S (Status change)	New	QnU*2 LCPU*1
SD1289	Ethernet basic time-out time	Basic timeout time setting for Ethernet processing	Specify the basic timeout time to be used for APR Response Wait in Ethernet processing. • 0: 500ms (default) • 1 to 65535: 1 to 65535ms	U	New	QnU*1 LCPU*1
SD1292	IP address setting	IP address (lower digits)	• Specify an IP address to be stored in the IP address storage area (flash ROM). Range: 00000001_H to $DFFFFFFE_H$ (0.0.0.1 to 223.255.255.254) • When writing to or clearing the IP address storage area (flash ROM) is completed, the values of the IP address stored in the IP address storage area (flash ROM) are stored.	S (Status change)/U	New	QnU*3 LCPU*6
SD1293		IP address (upper digits)				
SD1294		Subnet mask pattern (lower digits)	• Specify a subnet mask pattern to be stored in the IP address storage area (flash ROM). Range: $C0000000_H$ to $FFFFFFFC_H$ (192.0.0.0 to 255.255.255.252), 00000000_H (blank) • When writing to or clearing the IP address storage area (flash ROM) is completed, the values of the subnet mask pattern stored in the IP address storage area (flash ROM) are stored.			
SD1295		Subnet mask pattern (upper digits)				
SD1296		Default router IP address (lower digits)	• Specify a default router IP address to be stored in the IP address storage area (flash ROM). Range: 00000001_H to $DFFFFFFE_H$ (0.0.0.1 to 223.255.255.254), 00000000_H (blank) • When writing to or clearing the IP address storage area (flash ROM) is completed, the values of the default router IP address stored in the IP address storage area (flash ROM) are stored.			
SD1297		Default router IP address (upper digits)				
SD1298	IP address storage area write error factor	Stores error factor when failing to write to IP address storage area	This register stores an error factor occurred when writing to the IP address storage area (flash ROM). (Links with SM1294.) • 0_H: No error • 100_H: The values of SD1292 to SD1297 are out of the setting range. • 200_H: Write error • 300_H: Writing is not available because other function is being executed. • 400_H: Writing is not available because the IP address storage area is being cleared	S (Status change)	New	QnU*3 LCPU*6
SD1299	IP address storage area clear error factor	Stores error factor when failing to clear IP address storage area	This register stores an error factor occurred when clearing the IP address storage area (flash ROM). (Links with SM1297.) • 0_H: No error • 200_H: Clear error • 300_H: Clearing is not available because other function is being executed. • 400_H: Clearing is not available because the IP address storage area is being written.	S (Status change)	New	QnU*3 LCPU*6

Number	Name	Meaning	Explanation	Set by (When Set)	Corresponding ACPU D9□□□	Corresponding CPU
SD1395	Built-in Ethernet port counter	Number of times that data are not read due to receive buffer full	This register stores the number of times that packet data are not read due to receive buffer full. Range: 0 to 65535 (0000_H to $FFFF_H$)	S (Status change)	New	QnU*4

*1 Built-in Ethernet port QCPU and Built-in Ethernet port LCPU
*2 Built-in Ethernet port QCPU whose serial number (first five digits) is "10102" or later
*3 Built-in Ethernet port QCPU whose serial number (first five digits) is "11082" or later
*4 Built-in Ethernet port QCPU whose serial number (first five digits) is "12072" or later
*5 Built-in Ethernet port QCPU whose serial number (first five digits) is "12112" or later
*6 Built-in Ethernet port LCPU whose serial number (first five digits) is "15102" or later
*7 Built-in Ethernet port LCPU whose serial number (first five digits) is "16112" or later
*8 Modules whose serial number (first five digits) is "17052" or later

(14)Predefined protocol function

Number	Name	Meaning	Explanation	Set by (When Set)	Corresponding ACPU D9□□□	Corresponding CPU
SD1337	Predefined protocol setting data error information (for built-in/adapter serial communications)	Stores information for identifying the error location of predefined protocol setting data.	The protocol number where an error has been detected is stored. • 0: No error • 1 to 128: Protocol number • 65535: Unidentifiable If the value 65535 is stored, the following reasons are considered. • The setting that the current version of LCPU does not support is written. • The protocol setting data is collapsed.	S (Error)	New	LCPU*1
SD1338			The setting type of the protocol setting data where an error has been detected is stored. (The value will be stored only when the written protocol number is within the range of 1 to 128.) • 0: Packet setting or component setting • 1: Protocol detailed setting • 65535: Unidentifiable If the value 65535 is stored, the following reasons are considered. • The setting that the current version of LCPU does not support is written. • The protocol setting data is collapsed.			
SD1339			The packet number where an error has been detected is stored. (The value is stored only when the setting type is 0 (packet setting or component setting).) • 0: Transmitted packet • 1 to 16: Received packet number • 65535: Unidentifiable If the value 65535 is stored, the following reasons are considered. • The setting that the current version of LCPU does not support is written. • The protocol setting data is collapsed.			
SD1340			The component number where an error has been detected is stored. (The value is stored only when the setting type is 0 (packet setting or component setting).) • 1 to 32: Component number • 65535: Unidentifiable If the value 65535 is stored, the following reasons are considered. • The setting that the current version of LCPU does not support is written. • The protocol setting data is collapsed.			
SD1341	Number of protocols registered (for built-in/adapter serial communications)	Stores the number of protocols in the protocol setting data.	This register stores the number of protocols in the protocol setting data registered through the predefined protocol support function 0: No registration 1 to 128: Number of protocols	S (Status change)	New	LCPU*1

<table>
<tr><th>Number</th><th>Name</th><th>Meaning</th><th>Explanation</th><th>Set by (When Set)</th><th>Corresponding ACPU D9□□□</th><th>Corresponding CPU</th></tr>
<tr><td>SD1342 to SD1349</td><td>Protocol registration status (for built-in/adapter serial communications)</td><td>Stores the protocol registration status.</td><td>This register stores the presence or absence of protocols in the protocol setting data registered through the predefined protocol support function.
No. = Protocol number
<table><tr><th></th><th>b15</th><th></th><th>b1</th><th>b0</th></tr><tr><td>SD1342</td><td>No.16</td><td>to</td><td>No.2</td><td>No.1</td></tr><tr><td>SD1343</td><td>No.32</td><td>to</td><td>No.18</td><td>No.17</td></tr><tr><td>⌇</td><td colspan="3">⌇</td></tr><tr><td>SD1349</td><td>No.128</td><td>to</td><td>No.114</td><td>No.113</td></tr></table>If the check result of protocol setting data is abnormal, 0 is stored in all bits.</td><td>S (Status change)</td><td>New</td><td>LCPU*1</td></tr>
<tr><td>SD1351</td><td>Predefined protocol function error code (for built-in/adapter serial communications)</td><td>Stores the error code of the predefined protocol support function.</td><td>This register stores the error code of the predefined protocol support function.</td><td>S (Error)</td><td>New</td><td>LCPU*1</td></tr>
<tr><td>SD1359</td><td rowspan="4">Predefined protocol setting data error information (for built-in Ethernet communications)</td><td rowspan="4">Stores information for identifying the error location of protocol setting data.</td><td>The protocol number where an error has been detected is stored.
• 0: No error
• 1 to 128: Protocol number
• 65535: Unidentifiable
If the value 65535 is stored, the following reasons are considered.
• The setting that the current version of LCPU does not support is written.
• The protocol setting data is collapsed.</td><td rowspan="4">S (Error)</td><td rowspan="4">New</td><td rowspan="4">QnUDV*2
QnUDPV*2
LCPU*3</td></tr>
<tr><td>SD1360</td><td>The setting type of the protocol setting data where an error has been detected is stored. (The value will be stored only when the written protocol number is within the range of 1 to 128.)
• 0: Packet setting or component setting
• 1: Protocol detailed setting
• 65535: Unidentifiable
If the value 65535 is stored, the following reasons are considered.
• The setting that the current version of LCPU does not support is written.
• The protocol setting data is collapsed.</td></tr>
<tr><td>SD1361</td><td>The packet number where an error has been detected is stored. (The value is stored only when the setting type is 0 (packet setting or component setting).)
• 0: Transmitted packet
• 1 to 16: Received packet number
• 65535: Unidentifiable
If the value 65535 is stored, the following reasons are considered.
• The setting that the current version of LCPU does not support is written.
• The protocol setting data is collapsed.</td></tr>
<tr><td>SD1362</td><td>The component number where an error has been detected is stored. (The value is stored only when the setting type is 0 (packet setting or component setting).)
• 1 to 32: Component number
• 65535: Unidentifiable
If the value 65535 is stored, the following reasons are considered.
• The setting that the current version of LCPU does not support is written.
• The protocol setting data is collapsed.</td></tr>
</table>

Number	Name	Meaning	Explanation	Set by (When Set)	Corresponding ACPU D9□□□	Corresponding CPU
SD1363	Number of protocols registered (for built-in Ethernet communications	Stores the number of protocols in the protocol setting data.	This register stores the number of protocols in the protocol setting data registered through the predefined protocol support function • 0: No registration • 1 to 128: Number of protocols	S (Initial)	New	QnUDV*2 QnUDPV*2 LCPU*3
SD1365 to SD1372	Protocol registration status (for built-in Ethernet communications)	Stores the protocol registration status.	This register stores the presence or absence of protocols in the protocol setting data registered through the predefined protocol support function. No. = Protocol number SD1365: b15 No.16 to b1 No.2, b0 No.1 SD1366: No.32 to No.18, No.17 ⌇ SD1372: No.128 to No.114, No.113 If the check result of protocol setting data is abnormal, 0 is stored in all bits.	S (Initial)	New	QnUDV*2 QnUDPV*2 LCPU*3
SD1381	Predefined protocol function error code (for built-in Ethernet communications)	Stores the error code of the predefined protocol support function.	This register stores the error code of the predefined protocol support function.	S (Error)	New	QnUDV*2 QnUDPV*2 LCPU*3

*1 Modules whose serial number (first five digits) is "15102" or later
*2 Modules whose serial number (first five digits) is "15103" or later
*3 Built-in Ethernet port LCPU whose serial number (first five digits) is "15102" or later

(15)Fuse blown module

Number	Name	Meaning	Explanation	Set by (When Set)	Corresponding ACPU D9□□□	Corresponding CPU
SD1300	Fuse blown module	Bit pattern in units of 16 points, indicating the modules whose fuses have blown 0: No blown fuse 1: Blown fuse present	• The number of an output module whose fuse has blown is stored in the following bit pattern (in units of 16 points). (If the module numbers are set by parameter, the parameter-set numbers are stored.) • The status of the blown fuse of an output module on a remote station is also detected. 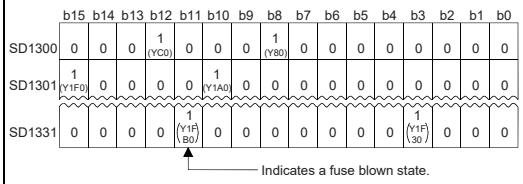 For a module whose number of output points exceeds 16 points, all bits corresponding to output module numbers within the number of output points occupied by the module (in units of 16 points) turn on. Example: When a 64-point module is mounted on the slot 0, b0 to b3 turn on when the fuse has blown. • Not cleared even if the blown fuse is replaced with a new one. The storage value is cleared by clearing the error.	S (Error)	D9100	Qn(H) QnPH QnPRH QnU LCPU*1
SD1301					D9101	
SD1302					D9102	
SD1303					D9103	
SD1304					D9104	
SD1305					D9105	
SD1306					D9106	
SD1307					D9107	
SD1308					New	
SD1309 to SD1330						
SD1331						

*1 Modules whose serial number (first five digits) is "16112" or later

(16)I/O module verification

Number	Name	Meaning	Explanation	Set by (When Set)	Corresponding ACPU D9□□□	Corresponding CPU
SD1400	I/O module verification error	Bit pattern, in units of 16 points, indicating the modules with verify errors. 0: No error 1: Error	• If the status of the I/O module changes from that obtained at power-on, the module No. is stored in the following bit pattern. (If the I/O numbers are set by parameter, the parameter-set numbers are stored.) • The status of the I/O module on a remote station is also detected. 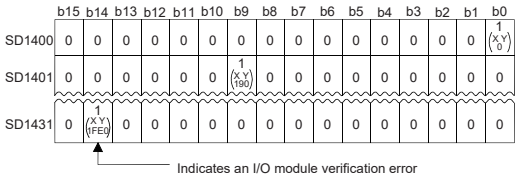 For a module whose number of I/O points exceeds 16 points, all bits corresponding to I/O module numbers within the number of I/O points occupied by the module (in increments of 16 points) turn on. Example: When a 64-point module is mounted on the slot 0, b0 to b3 turn on when an error is detected. • Not cleared even if the blown fuse is replaced with a new one. This flag is cleared by error resetting operation.	S (Error)	D9116	Qn(H) QnPH QnPRH QnU LCPU
SD1401					D9117	
SD1402					D9118	
SD1403					D9119	
SD1404					D9120	
SD1405					D9121	
SD1406					D9122	
SD1407					D9123	
SD1408					New	
SD1409 to SD1430						
SD1431						

(17)iQ Sensor Solution

Number	Name	Meaning	Explanation	Set by (When Set)	Corresponding ACPU D9□□□	Corresponding CPU
SD1435	Use request (iQ Sensor Solution backup/restoration)	Requests the use of the backup/restoration function.	This register is used to acquire a right to use the backup/restoration function before its execution. A four-digit number (other than request number 0000_H) shall be set. The number is determined according to the request source. $1***_H$: when requested using a ladder program $D***_H$: when requested from MELSOFT Navigator $E***_H$: when requested from GOT $F***_H$: when requested from GX Works2 • A value is cleared to "0" when the right is lost.	S (Status change)/U	New	QnUDV*1 QnUDPV*1 LCPU*2
SD1436	Right acquisition status (iQ Sensor Solution backup/restoration)	Stores the request source that has acquired a right to use the backup/restoration function.	This register stores the request source that has acquired a right to use the backup/restoration function. • A value is cleared to "0" when the right is lost.	S (Status change)	New	QnUDV*1 QnUDPV*1 LCPU*2
SD1437	Target module/execution unit setting (iQ Sensor Solution backup/restoration)	Sets the target module and execution unit for backup/restoration.	This register is used to set the target module and execution unit for backup/restoration. Lower 8 bits (target module) 1_H: AnyWireASLINK 2_H: CC-Link 3_H: Ethernet 4_H: CC-Link IE Field Network Upper 8 bits (execution unit) [AnyWireASLINK] 1_H: Module 2_H: ID [CC-Link, CC-Link IE Field Network] 1_H: Module 2_H: Station 3_H: Station sub-ID [Ethernet] 1_H: Module 2_H: IP address	U	New	QnUDV*1 QnUDPV*1 LCPU*2
SD1438	Folder number setting (iQ Sensor Solution backup/restoration)	Sets the folder number for backup/restoration.	This register is used to set a number of a folder in which backup data is to be stored or a folder that contains data for restoration. 0 to 99: Folder number specification $FFFE_H$: Automatic specification (folder deletion supported) $FFFF_H$ (default): Automatic specification	U	New	QnUDV*1 QnUDPV*1 LCPU*2
SD1439	Target module setting (iQ Sensor Solution backup/restoration)	Sets a module targeted for backup/restoration.	This register is used to set a module targeted for backup/restoration. I/O No.: Module (Enter the value obtained by dividing the start I/O number by 16.) $3FF_H$: Built-in Ethernet	U	New	QnUDV*1 QnUDPV*1 LCPU*2
SD1440	Target device 1 setting (iQ Sensor Solution backup/restoration)	Sets devices targeted for backup/restoration.	This register is used to set a device targeted for backup/restoration. [AnyWireASLINK] ID number [CC-Link, CC-Link IE Field Network] Station number [Ethernet] IP address (lower 16 bits) (Example) If the IP address is 192.168.3.40, 3 equals to 3_H and 40 equals to 28_H. The stored value will be 0328_H, that is, 808.	U	New	QnUDV*1 QnUDPV*1 LCPU*2

Number	Name	Meaning	Explanation	Set by (When Set)	Corresponding ACPU D9□□□	Corresponding CPU
SD1441	Target device 2 setting (iQ Sensor Solution backup/restoration)	Sets devices targeted for backup/restoration.	This register is used to set a device targeted for backup/restoration. [AnyWireASLINK] 0 (Not used) [CC-Link, CC-Link IE Field Network] Station sub-ID number [Ethernet] IP address (upper 16 bits) (Example) If the IP address is 192.168.3.40, 192 equals to $C0_H$ and 168 equals to $A8_H$. The stored value will be $C0A8_H$, that is, 49320.	U	New	QnUDV*1 QnUDPV*1 LCPU*2
SD1444	Operation setting (iQ Sensor Solution backup/restoration)	Sets the operation status when a backup/restoration error occurs	This register stores the operation status of the CPU module when a backup/restoration error occurs. 0: Continue 1: Stop	U	New	QnUDV*1 QnUDPV*1 LCPU*2
SD1445	Communication timeout time (iQ Sensor Solution backup/restoration)	Specifies the communication timeout time of backup/restoration.	This register is used to specify the communication timeout time of backup/restoration in increments of 100ms. 0: 60000ms (default) 1 to 65535 (×100ms): 100 to 6553500ms	U	New	QnUDV*1 QnUDPV*1 LCPU*2
SD1446	Execution status (iQ Sensor Solution backup/restoration)	Stores the backup/restoration execution status.	This register stores the backup/restoration execution status. 0_H: Not executed 1_H: In preparation 2_H: Being executed 3_H: Completed 10_H: Wait 11_H: Cancelled (no error) FE_H: Cancelled (error) FF_H: Error	S (Status change)	New	QnUDV*1 QnUDPV*1 LCPU*2
SD1447	Total number of target devices (iQ Sensor Solution backup/restoration)	Stores the total number of devices targeted for backup/restoration.	This register stores the total number of devices targeted for backup/restoration for each execution unit. • A value is cleared to "0" when the right is acquired.	S (Status change)	New	QnUDV*1 QnUDPV*1 LCPU*2
SD1448	Number of normally completed devices (iQ Sensor Solution backup/restoration)	Stores the number of devices where data are backed up or restored successfully.	This register stores the number of devices, for each execution unit, where data have been backed up or restored successfully. • A value is cleared to "0" when the right is acquired.	S (Status change)	New	QnUDV*1 QnUDPV*1 LCPU*2
SD1449	Number of devices completed with an error (iQ Sensor Solution backup/restoration)	Stores the number of devices where data are not backed up or restored successfully.	This register stores the number of devices, for each execution unit, where data have not been backed up or restored successfully. • A value is cleared to "0" when the right is acquired.	S (Status change)	New	QnUDV*1 QnUDPV*1 LCPU*2
SD1450	Progress per device (iQ Sensor Solution backup/restoration)	Stores the progress of the backup/restoration processing per device.	This register stores the progress of the backup/restoration processing per device in percentage (0 to 100%). • A value is cleared to "0" when the right is acquired.	S (Status change)	New	QnUDV*1 QnUDPV*1 LCPU*2
SD1451	Folder number (iQ Sensor Solution backup)	Stores the number of a folder in which backup data is stored.	This register stores the number of a folder in which backup data is stored. 0 to 99: Folder number $FFFF_H$: Backup data not stored • $FFFF_H$ is stored when when the right is acquired.	S (Status change)	New	QnUDV*1 QnUDPV*1 LCPU*2

Number	Name	Meaning	Explanation	Set by (When Set)	Corresponding ACPU D9□□□	Corresponding CPU
SD1452	Error cause in a module (iQ Sensor Solution backup/restoration)	Stores the cause of the backup/restoration error detected in a module.	This register stores the cause of the backup/restoration error detected in a module. • When errors are detected in multiple devices, the error detected first is stored. • A value is cleared to "0" when the right is acquired. For details on the cause of the error that is stored, refer to the following. ☞ Page 433, Appendix 1.11 📖 User's manual of the module that is targeted for data backup/restoration	S (Error/Status change)	New	QnUDV*1 QnUDPV*1 LCPU*2
SD1453	Error cause in a device (iQ Sensor Solution backup/restoration)	Stores the cause of the backup/restoration error detected in a device.	This register stores the cause of the backup/restoration error detected in a device. • When errors are detected in multiple devices, the error detected first is stored. • A value is cleared to "0" when the right is acquired. For details on the cause of the error that is stored, refer to the following. 📖iQ Sensor Solution Reference Manual	S (Error/Status change)	New	QnUDV*1 QnUDPV*1 LCPU*2
SD1454	Error module/execution unit information (iQ Sensor Solution backup/restoration)	Stores the module and execution unit information when a backup/restoration error occurs.	This register stores the module and execution unit information when a backup/restoration error occurs. Lower 8 bits (target module) 1_H: AnyWireASLINK 2_H: CC-Link 3_H: Ethernet 4_H: CC-Link IE Field Network Upper 8 bits (execution unit) 1_H: AnyWireASLINK 2_H: CC-Link 3_H: Ethernet 4_H: CC-Link IE Field Network [AnyWireASLINK] 1_H: Module 2_H: ID [CC-Link, CC-Link IE Field Network] 1_H: Module 2_H: Station 3_H: Station sub-ID [Ethernet] 1_H: Module 2_H: IP address • A value is cleared to "0" when the right is acquired.	S (Error/Status change)	New	QnUDV*1 QnUDPV*1 LCPU*2
SD1455	Error folder number information (iQ Sensor Solution backup/restoration)	Stores the target folder number when a backup/restoration error occurs.	This register stores the target folder number (0 to 99) when a backup/restoration error occurs. • When the folder number cannot be identified, $FFFF_H$ is stored. • A value is cleared to "0" when the right is acquired.	S (Error/Status change)	New	QnUDV*1 QnUDPV*1 LCPU*2
SD1456	Error module information (iQ Sensor Solution backup/restoration)	Stores the information of a module where a backup/restoration error is detected first.	This register stores the information of a module where a backup/restoration error occurs. I/O No.: Module (Enter the value obtained by dividing the start I/O number by 16.) $3FF_H$: Built-in Ethernet • When errors are detected in multiple devices, the information of a module where the error detected first is stored. • A value is cleared to "0" when the right is acquired.	S (Error/Status change)	New	QnUDV*1 QnUDPV*1 LCPU*2

Number	Name	Meaning	Explanation	Set by (When Set)	Corresponding ACPU D9□□□	Corresponding CPU
SD1457	Error device Information (device 1) (iQ Sensor Solution backup/restoration)	Stores the information of a device where a backup/restoration error is detected first.	This register stores the information of a device (device 1) where a backup/restoration error occurs. [AnyWireASLINK] ID number [CC-Link, CC-Link IE Field Network] Station number [Ethernet] IP address (lower 16 bits) (Example) If the IP address is 192.168.3.40, 3 equals to 3_H and 40 equals to 28_H. The stored value will be 0328_H, that is, 808. • When errors are detected in multiple devices, the information of a device (device 1) where the error detected first is stored. • A value is cleared to "0" when the right is acquired.	S (Error/Status change)	New	QnUDV*1 QnUDPV*1 LCPU*2
SD1458	Error device Information (device 2) (iQ Sensor Solution backup/restoration)		This register stores the target-device (device 2) information for which a backup/restoration error occurs. [AnyWireASLINK] 0 (Not used) [CC-Link, CC-Link IE Field Network] Station sub-ID number [Ethernet] IP address (upper 16 bits) (Example) If the IP address is 192.168.3.40, 192 equals to $C0_H$ and 168 equals to $A8_H$. The stored value will be $C0A8_H$, that is, 49320. • When errors are detected in multiple devices, the information of a device (device 2) where the error detected first is stored. • A value is cleared to "0" when the right is acquired.			

*1 The QnUDVCPU whose serial number (first five digits) is "17012" or later supports the backup/restoration function for AnyWireASLINK and CC-Link.
The QnUDVCPU whose serial number (first five digits) is "17052" or later supports the backup/restoration function for CC-Link IE Field Network.
The QnUDVCPU whose serial number (first five digits) is "18072" or later supports the backup/restoration function for built-in Ethernet.

*2 Built-in Ethernet port LCPU whose serial number (first five digits) is "14112" or later

(18)Process control instruction

Number	Name	Meaning	Explanation	Set by (When Set)	Corresponding ACPU D9□□□	Corresponding CPU
SD1500, SD1501	Basic period	Basic period time	Set the basic period (1 second units) use for the process control instruction using floating point data. Floating points data = [SD1501 | SD1500]	U	New	QnPH QnPRH QnUDPV
SD1502	Process control instruction detail error code	Process control instruction detail error code	This register indicates the details of an error occurred by executing a process control instruction.	S (Error)	New	QnPH QnPRH QnUDPV
SD1503	Process control instruction generated error location	Process control instruction generated error location	Shows the error process block that occurred in the process control instruction.	S (Error)	New	QnPH QnPRH QnUDPV
SD1506, SD1507	Dummy device	Dummy device	Used to specify dummy devices by a process control instruction.	U	New	QnPH QnPRH QnUDPV
SD1508	Function availability selection for process control instruction	b0 Bumpless function availability setting for the S.PIDP instruction 0: Enabled 1: Disabled (Default: 0)	This register stores whether to enable functions for process control instructions. 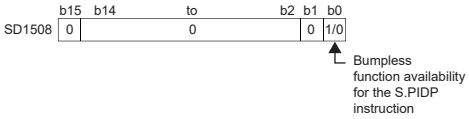	U	New	QnPH QnPRH QnUDPV

(19)Redundant system (host system CPU information*1)

The special register (SD1510 to SD1599) is valid only for redundant systems. All bits are set to "0" for stand-alone systems.

Number	Name	Meaning	Explanation	Set by (When Set)	Corresponding ACPU D9□□□	Corresponding CPU
SD1585	Redundant system LED status	4 LED states • BACKUP • CONTROL • SYSTEM A • SYSTEM B	The LED status of BACKUP, CONTROL, SYSTEM A, or SYSTEM B is stored in the following format: 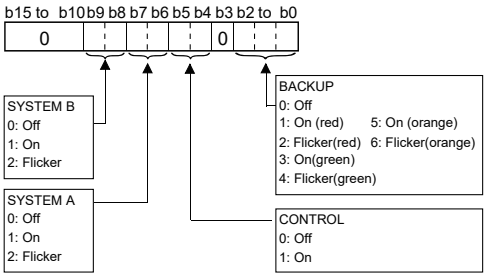	S (Status change)	New	QnPRH
SD1588	Reason(s) for system switching	Reason(s) for system switching that occurred in host station	The reason(s) for system switching on the host system is stored. The following values are stored corresponding to the methods for system switching: This register is initialized with zero (0) stored when the system is powered on from off or is reset. 0: Initial value (control system has never been switched) 1: Power off, Reset, H/W failure, WDT error 2: CPU stop error (except WDT) 3: System switching request from network module 16: Control system switching instruction 17: System switching request from a programming tool	S (when condition occurs)	○	QnPRH

Number	Name	Meaning	Explanation	Set by (When Set)	Corresponding ACPU D9□□□	Corresponding CPU
SD1589	Reason(s) for system switching failure conditions	Reason(s) for system switching failure No	• When a system switching has failed, a value corresponding to the system switching failure cause is stored. 0: System switching complete (default) 1: Tracking cable is not connected, tracking cable failure, or internal circuit failure 2: H/W failure, power-off, reset, watchdog timer error on the standby system 3: H/W failure, power-off, reset, WDT error on the control system 4: Preparing tracking communication 5: Communication timeout 6: Stop error on the standby system (except for watchdog timer error) 7: Operation differs between both systems (detected only in the back up mode) 8: During memory copy from control system to standby system 9: Performing program online change 10: Detecting a failure of network module on the standby system 11: System is being switched • The value is reset to "0" when host system is powered on. • Zero is stored in this register upon completion of system switching.	S (when system is switched)	○	QnPRH
SD1590	Network module head address, which requested system switching	Network module head address, which requested system switching	• When system switching is requested from a network module in the host system, the bit corresponding to the module that received the request turns on. 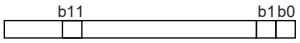 b1 to b11: Slot No.1 to slot No.11 (Slot No.0 (b0) is invalid because the CPU module occupies two slots.) • The system turns off the bit after the error is removed by a user. • For the number for modules where system switching is requested from a network module in other system, refer to SD1690.	S (Error/Status change)	New	QnPRH
SD1595	Memory copy target I/O number	Memory copy target I/O number	• Before SM1595 is turned from off to on, the I/O No. of the memory copy destination (Standby system CPU module: $3D1_H$) is stored.	U	New	QnPRH
SD1596	Memory copy status	Memory copy status	• The execution result of the memory copy function is stored. 0: Memory copy is complete 4241_H: Standby system power supply off 4242_H: Tracking cable is disconnected or is damaged 4247_H: Memory copy is being executed 4248_H: Unsupported memory copy destination I/O number	S (Status change)	New	QnPRH

*1 The information of the host CPU module is stored.

(20)Redundant system (other system CPU information[*1])

The special register (SD1600 to SD1650) is valid when the redundant system is in backup mode and is invalid in separate mode. The special register (SD1651 to SD1690) is valid when the redundant system is in backup mode or in separate mode. All bits in SD1600 to SD1690 are set to "0" for stand-alone systems.

Number	Name	Meaning	Explanation	Set by (When Set)	Corresponding host CPU SD□□[*2]	Corresponding CPU
SD1600	System error information	System error information	• When an error is detected by the redundant system error check, the bit corresponding to the error turns on. The bit turns off when the error is cleared. 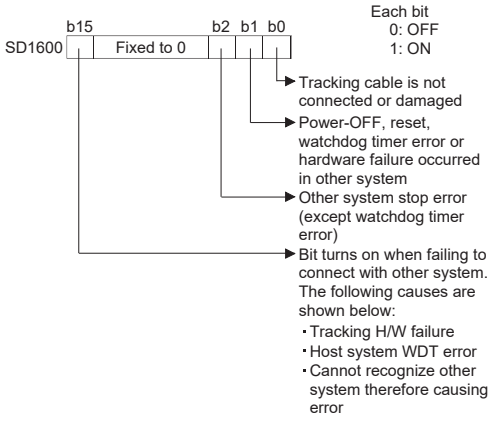 • If any of b0, b1, b2 and b15 is on, the other bits are off. • In the debug mode, b0, b1, b2 and b15 are all off.	S (Every END processing)	—	QnPRH
SD1601	System switching results	System switching results	Reason(s) for system switching is stored. • When a system is switched, the reason for system switching is stored in SD1601 of both systems. • This register is initialized with zero (0) stored when the system is powered on from off or is reset. • The following shows the values stored in this register. 0: Initial value (control system has never been switched) 1: Power-off, reset, H/W failure, or watchdog timer error [*1] 2: Stop error (except for watchdog timer error) 3: System switching request from network module 16: Control system switching instruction 17: System switching request from a programming tool *1 When the system is switched upon the power-off or reset of the control system, "1" is not stored in SD1601 of the new standby system.	S (when system is switched)	—	QnPRH
SD1602	System switching dedicated instruction parameter	System switching dedicated instruction parameter	• When a system is switched by the SP.CONTSW instruction, the argument of the instruction is stored. (The argument is stored in SD1602 of both systems at the system switching.) • SD1602 is only valid when "16" is stored in SD1601. • SD1602 is updated only when a system is switched by the control system switching instruction.	S (when system is switched)	—	QnPRH
SD1610	Other system diagnostic error	Diagnostic error code	• The code of the error occurred in the other system is stored. • The value in SD0 of the CPU module on the other system is reflected.	S (Every END processing)	SD0	QnPRH
SD1611 to SD1613	Other system diagnostic error occurrence time	Diagnostic error occurrence time	• The date and time of the diagnostics error occurred in the other system are stored. • Data format is the same as SD1 to SD3. • The values in SD1 to SD03 of the CPU module on the other system are reflected.	S (Every END processing)	SD1 to SD3	QnPRH

Number	Name	Meaning	Explanation	Set by (When Set)	Corresponding host CPU SD□□*2	Corresponding CPU
SD1614	Other system error information category	Error information category code	• The error information category codes for individual information and common information of the error occurred in the other system are stored. • Data format is the same as SD4. • The value in SD4 of the CPU module on the other system is reflected.	S (Every END processing)	SD4	QnPRH
SD1615 to SD1625	Other system error common information	Error common information	• Stores the common information corresponding to the error code stored in this system CPU. • Data composition is the same as SD5 to SD15. • The values in SD5 to SD15 of the CPU module on the other system are reflected.	S (Every END processing)	SD5 to SD15	QnPRH
SD1626 to SD1636	Other system error individual information	Error individual information	• The individual information of the error occurred in the other system is stored. • Data composition is the same as SD16 to SD26. • The values in SD16 to SD26 of the CPU module on the other system are reflected.	S (Every END processing)	SD16 to SD26	QnPRH
SD1649	Standby system error cancel command	Error code of the error to be cleared	• The code of the error to be cleared by the standby system error cancel command is stored. • The standby system error is cleared by turning SM1649 from off to on after storing the error code of the error to clear. • The least significant digit (ones place) of the error code in this register is ignored. (The errors corresponding to error codes 4100 to 4109 are cleared by storing 4100 in this register.)	S (Every END processing)	—	QnPRH
SD1650	Other system operating information	Other system operating information	The operating information of the CPU module on the other system is stored in the following bit pattern. When communications with other systems are disabled or the system is in the debug mode, "00FF$_H$" is stored. 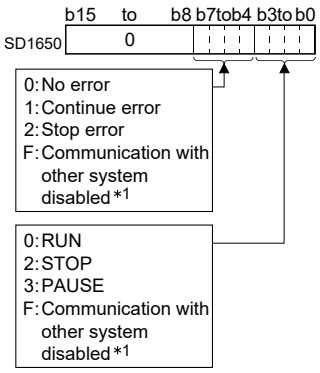 *1 Communication with other system disabled, debug mode Note: Communications are disabled in the following states. • The other system is powered off or is being reset. • A hardware failure has occurred on the host or the other system. • A watchdog timer error has occurred on the host or the other system. • Tracking cable is not connected. Tracking cable is broken or failed.	S (Every END processing)	—	QnPRH

Number	Name	Meaning	Explanation	Set by (When Set)	Corresponding host CPU SD□□*2	Corresponding CPU
SD1690	Network module head address, which requested system switching on host (control) system	Network module head address, which requested system switching on host (control) system	• When system switching is requested from a network module in the other system, the bit corresponding to the module that received the request turns on. 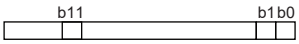 b1 to b11: Slot No.1 to slot No.11 (Slot No.0 (b0) is invalid because the CPU module occupies two slots.) • The system turns off the bit after the error in the corresponding module is removed by a user. • To find the number for the module where system switching is requested from a network module in the host system, refer to SD1590.	S (Every END processing)	—	QnPRH

*1 Diagnostic information of the CPU module in the other system is stored.
*2 Special register areas (SD□□) for the CPU module in the host system

(21)E-mail send/receive function

Number	Name	Meaning	Explanation	Set by (When Set)	Corresponding ACPU D9□□□	Corresponding CPU
SD1659	Language information	Language information	This register stores language information of e-mail. • 0 or other than below: English/Japanese (default) • 2: Chinese (simplified Chinese characters)	U	New	LCPU*1
SD1660	MC protocol command error code	Error code when an MC protocol command error is detected	• This register stores the error code when an MC protocol command error is detected. The error code is also stored when execution of MC protocol command is disabled in parameter. • A value, 0, is set at execution of the e-mail receive instruction.	S (Error)	New	LCPU*1

*1 Built-in Ethernet port LCPU whose serial number (first five digits) is "16112" or later

(22)Redundant system (tracking information)

The special register (SD1700 to SD1779) is valid only for redundant systems. All bits are set to "0" for stand-alone systems.

Number	Name	Meaning	Explanation	Set by (When Set)	Corresponding ACPU D9□□□	Corresponding CPU
SD1700	Tracking error detection count	Tracking error detection count	• A value in this register is incremented by one upon tracking error. • The counter starts the routine: counts up from 0 to 32767, then counts down to -32767 and then again counts up to 0.	S (Error)	New	QnPRH
SD1710	Waiting time for online program change (standby system)	Waiting time for online program change (standby system)	• This register stores the waiting time required for starting the online program change in the standby system after completion of that in the control system. The value is specified in units of seconds. • If online program change is not requested even after it is completed in the control system, the CPU modules in both of the system determine that it is a failure of an online program change for redundancy. In this case, both system CPU modules resume the consistency check for the systems that have been on hold during the online program change. Also, the control system is set to accept another request of online program change for redundancy. • When both systems are powered on, 90 seconds are set to SD1710 as the default value. • Set the value within the range 90 to 3600 seconds. When the setting is 0 to 89 seconds, it is regarded as 90 seconds for operation. If the setting is outside the allowed range, it is regarded other than 0 to 3600 seconds for operation. • The waiting time for a start of online program change to the standby system CPU module is checked according to the SD1710 setting during online change of multiple blocks and online change of batch of files for redundancy.	S (Initial)/U	New	QnPRH

(23)Redundant power supply module information

The special register (SD1780 to SD1789) is valid only for redundant power supply systems.

Number	Name	Meaning	Explanation	Set by (When Set)	Corresponding ACPU D9□□□	Corresponding CPU
SD1780	Power supply off detection status	Power supply off detection status	• This register stores the status of the redundant power supply module (Q63RP, Q64RPN, or Q64RP) with input power off, in the following bit pattern. 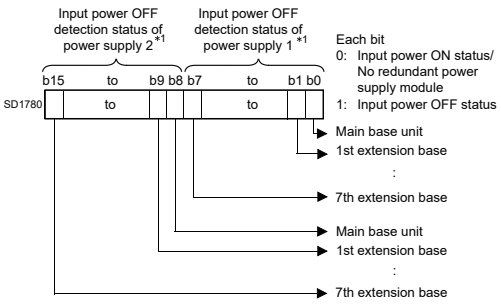 • In a multiple CPU system, the status is stored only to CPU module No.1.	S (Every END processing)	New	Qn(H)*3 QnPH*3 QnPRH QnU*4
SD1781	Power supply failure detection status	Power supply failure detection status	• This register stores the failure detection status of the redundant power supply module (Q63RP, Q64RPN, or Q64RP) in the following bit pattern. (After a failure is detected, the bit corresponding to the failed module is set to "0" upon powering off the module.) 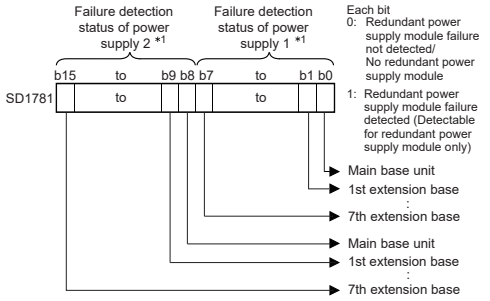 • In a multiple CPU system, the status is stored only to CPU module No.1.	S (Every END processing)	New	Qn(H)*3 QnPH*3 QnPRH QnU*4
SD1782	Momentary power failure detection counter for power supply 1*1	Momentary power failure detection count for power supply 1	• This register counts the number of times of momentary power failure of the power supply 1/2. • This register monitors the status of the power supply 1/2 mounted on the redundant power main base unit (Q38RB) and counts the number of momentary power failures. The status of the power supply 1/2 mounted on the extension base unit for redundant power supply system and the redundant type extension base unit is not monitored. • When the CPU module starts, the counter of the power supply 1/ 2 is cleared to 0. • If the input power to one of the redundant power supply modules is turned off, the corresponding counter is cleared to "0". • The counter is incremented by one upon momentary power failure on the power supply 1 or 2. (The counter repeats increment and decrement of the value; 0 → 32767 → -32768 → 0. (The value is displayed within the range of 0 to 65535 in the system monitor screen of programming tool.)) • When the main base unit is not the redundant power main base unit (Q38RB), "0" is stored. • In a multiple CPU system, the status is stored only to CPU module No.1.	S (Every END processing)	New	Qn(H)*3 QnPH*3 QnPRH QnU*4
SD1783	Momentary power failure detection counter for power supply 2*2	Momentary power failure detection count for power supply 2				

*1 The "power supply 1" indicates the redundant power supply module mounted on the POWER 1 slot of the redundant base unit (Q38RB/68RB/Q65WRB).
*2 The "power supply 2" indicates the redundant power supply module mounted on the POWER 2 slot of the redundant base unit (Q38RB/68RB/Q65WRB).
*3 Modules whose serial number (first five digits) is "07032" or later. In a multiple CPU system, the serial number (first five digits) of all the CPU modules must be "07032" or later.
*4 Modules whose serial number (first five digits) is "10042" or later

(24)CC-Link IE Field Network Basic function

<table>
<tr><th>Number</th><th>Name</th><th>Meaning</th><th>Explanation</th><th>Set by (When Set)</th><th>Corresponding ACPU D9□□□</th><th>Corresponding CPU</th></tr>
<tr><td>SD1700 to SD1703</td><td>Cyclic transmission status of each station</td><td>Cyclic transmission status of each station</td><td>The cyclic transmission status of each station is stored in the following bit pattern. (Off: Not performed, On: Being performed)
■QnUDV, QnUDPV
<table><tr><th></th><th>b15</th><th>b14</th><th>b13</th><th>b12</th><th>b11</th><th>b10</th><th>b9</th><th>b8</th><th>b7</th><th>b6</th><th>b5</th><th>b4</th><th>b3</th><th>b2</th><th>b1</th><th>b0</th></tr><tr><td>SD1700</td><td>16</td><td>15</td><td>14</td><td>13</td><td>12</td><td>11</td><td>10</td><td>9</td><td>8</td><td>7</td><td>6</td><td>5</td><td>4</td><td>3</td><td>2</td><td>1</td></tr><tr><td>SD1701</td><td>32</td><td>31</td><td>30</td><td>29</td><td>28</td><td>27</td><td>26</td><td>25</td><td>24</td><td>23</td><td>22</td><td>21</td><td>20</td><td>19</td><td>18</td><td>17</td></tr><tr><td>SD1702</td><td>48</td><td>47</td><td>46</td><td>45</td><td>44</td><td>43</td><td>42</td><td>41</td><td>40</td><td>39</td><td>38</td><td>37</td><td>36</td><td>35</td><td>34</td><td>33</td></tr><tr><td>SD1703</td><td>64</td><td>63</td><td>62</td><td>61</td><td>60</td><td>59</td><td>58</td><td>57</td><td>56</td><td>55</td><td>54</td><td>53</td><td>52</td><td>51</td><td>50</td><td>49</td></tr></table>■LCPU
<table><tr><th></th><th>b15</th><th>b14</th><th>b13</th><th>b12</th><th>b11</th><th>b10</th><th>b9</th><th>b8</th><th>b7</th><th>b6</th><th>b5</th><th>b4</th><th>b3</th><th>b2</th><th>b1</th><th>b0</th></tr><tr><td>SD1700</td><td>16</td><td>15</td><td>14</td><td>13</td><td>12</td><td>11</td><td>10</td><td>9</td><td>8</td><td>7</td><td>6</td><td>5</td><td>4</td><td>3</td><td>2</td><td>1</td></tr></table>The numbers in the figure indicate station numbers.
(Condition)
• Only the bit of the start station number turns on.
• The status is not stored for the reserved stations and the station numbers after the maximum station number.
Use this register as an interlock for cyclic transmission. For details on the interlock program, refer to the following.
📖CC-Link IE Field Network Basic Reference Manual</td><td>S (Every END processing)</td><td>New</td><td>QnUDV*1
QnUDPV*1
LCPU*2</td></tr>
<tr><td>SD1704 to SD1707</td><td>Data link status of each station</td><td>Data link status of each station</td><td>The data link status of each station is stored in the following bit pattern. (Off: Normally operating station, On: Faulty station)
■QnUDV, QnUDPV
<table><tr><th></th><th>b15</th><th>b14</th><th>b13</th><th>b12</th><th>b11</th><th>b10</th><th>b9</th><th>b8</th><th>b7</th><th>b6</th><th>b5</th><th>b4</th><th>b3</th><th>b2</th><th>b1</th><th>b0</th></tr><tr><td>SD1704</td><td>16</td><td>15</td><td>14</td><td>13</td><td>12</td><td>11</td><td>10</td><td>9</td><td>8</td><td>7</td><td>6</td><td>5</td><td>4</td><td>3</td><td>2</td><td>1</td></tr><tr><td>SD1705</td><td>32</td><td>31</td><td>30</td><td>29</td><td>28</td><td>27</td><td>26</td><td>25</td><td>24</td><td>23</td><td>22</td><td>21</td><td>20</td><td>19</td><td>18</td><td>17</td></tr><tr><td>SD1706</td><td>48</td><td>47</td><td>46</td><td>45</td><td>44</td><td>43</td><td>42</td><td>41</td><td>40</td><td>39</td><td>38</td><td>37</td><td>36</td><td>35</td><td>34</td><td>33</td></tr><tr><td>SD1707</td><td>64</td><td>63</td><td>62</td><td>61</td><td>60</td><td>59</td><td>58</td><td>57</td><td>56</td><td>55</td><td>54</td><td>53</td><td>52</td><td>51</td><td>50</td><td>49</td></tr></table>■LCPU
<table><tr><th></th><th>b15</th><th>b14</th><th>b13</th><th>b12</th><th>b11</th><th>b10</th><th>b9</th><th>b8</th><th>b7</th><th>b6</th><th>b5</th><th>b4</th><th>b3</th><th>b2</th><th>b1</th><th>b0</th></tr><tr><td>SD1704</td><td>16</td><td>15</td><td>14</td><td>13</td><td>12</td><td>11</td><td>10</td><td>9</td><td>8</td><td>7</td><td>6</td><td>5</td><td>4</td><td>3</td><td>2</td><td>1</td></tr></table>The numbers in the figure indicate station numbers.
(Condition)
• Only the bit of the start station number turns on.
• The status is not stored for the reserved stations and the station numbers after the maximum station number.
This register can be used to monitor errors in device stations, connected cables, and connected hubs.</td><td>S (Every END processing)</td><td>New</td><td>QnUDV*1
QnUDPV*1
LCPU*2</td></tr>
<tr><td>SD1716</td><td>Total number of connected stations</td><td>Total number of connected stations</td><td>The total number of connected stations set in parameter is stored.</td><td>S (Initial)</td><td>New</td><td>QnUDV*1
QnUDPV*1
LCPU*2</td></tr>
</table>

Number	Name	Meaning	Explanation	Set by (When Set)	Corresponding ACPU D9□□□	Corresponding CPU
SD1718 to SD1721	Reserved station specification status of each station	Reserved station specification status of each station	The reserved station specification status is stored in the following bit pattern. (Off: Other than the reserved station, On: Reserved station) **■QnUDV, QnUDPV** 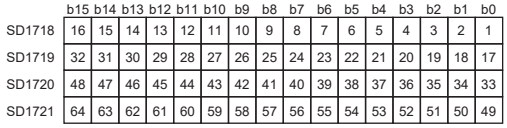 **■LCPU** 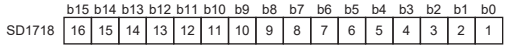 The numbers in the figure indicate station numbers. (Condition) • Only the bit of the start station number turns on. • The status is not stored for the station numbers after the maximum station number.	S (Initial)	New	QnUDV*1 QnUDPV*1 LCPU*2
SD1722	Link scan information	Maximum link scan of group No.1	The maximum link scan time value during cyclic transmission is stored. (Unit: ms)	S (Status change)	New	QnUDV*1 QnUDPV*1 LCPU*2
SD1723		Minimum link scan of group No.1	The minimum link scan time value during cyclic transmission is stored. (Unit: ms)	S (Status change)	New	QnUDV*1 QnUDPV*1 LCPU*2
SD1724		Current link scan of group No.1	The current link scan time value during cyclic transmission is stored. (Unit: ms)	S (Status change)	New	QnUDV*1 QnUDPV*1 LCPU*2
SD1726		Maximum link scan of group No.2	The maximum link scan time value during cyclic transmission is stored. (Unit: ms)	S (Status change)	New	QnUDV*3 QnUDPV*3
SD1727		Minimum link scan of group No.2	The minimum link scan time value during cyclic transmission is stored. (Unit: ms)	S (Status change)	New	QnUDV*3 QnUDPV*3
SD1728		Current link scan of group No.2	The current link scan time value during cyclic transmission is stored. (Unit: ms)	S (Status change)	New	QnUDV*3 QnUDPV*3
SD1730		Maximum link scan of group No.3	The maximum link scan time value during cyclic transmission is stored. (Unit: ms)	S (Status change)	New	QnUDV*3 QnUDPV*3
SD1731		Minimum link scan of group No.3	The minimum link scan time value during cyclic transmission is stored. (Unit: ms)	S (Status change)	New	QnUDV*3 QnUDPV*3
SD1732		Current link scan of group No.3	The current link scan time value during cyclic transmission is stored. (Unit: ms)	S (Status change)	New	QnUDV*3 QnUDPV*3
SD1734		Maximum link scan of group No.4	The maximum link scan time value during cyclic transmission is stored. (Unit: ms)	S (Status change)	New	QnUDV*3 QnUDPV*3
SD1735		Minimum link scan of group No.4	The minimum link scan time value during cyclic transmission is stored. (Unit: ms)	S (Status change)	New	QnUDV*3 QnUDPV*3
SD1736		Current link scan of group No.4	The current link scan time value during cyclic transmission is stored. (Unit: ms)	S (Status change)	New	QnUDV*3 QnUDPV*3

Number	Name	Meaning	Explanation	Set by (When Set)	Corresponding ACPU D9□□□	Corresponding CPU
SD1741	Diagnostic request information	Diagnostic request information	The diagnostic information display target device station is specified. **■QnUDV, QnUDPV** Range: 1 to 64 • For the High-speed Universal model QCPU and Universal model Process CPU whose serial number (first five digits) is earlier than "19042", the range is 1 to 16. **■LCPU** Range: 1 to 16 • For the Built-in Ethernet port LCPU whose serial number (first five digits) is earlier than "19042", the range is 1 to 8.	U	New	QnUDV*1 QnUDPV*1 LCPU*2
SD1742	Diagnostic information status flag	Diagnostic information status flag	• After the END instruction in the scan where SM1741 turns on is executed, the status (valid or invalid) of diagnostic information (Diagnostic information 1, Diagnostic information 2) of the device station specified in SD1741 is stored. • If the station number of the device station specified in SD1741 is the start station number of the occupied stations, 1 is stored in Diagnostic information 1 (b0 to b7) and Diagnostic information 2 (b8 to b15). (If the station is a reserved station, 0 is stored in Diagnostic information 2 (b8 to b15).) • If parameters have not been set to the device station specified in SD1741 or the station number of the device station specified in SD1741 is not the start station number of the occupied stations, 0 is stored in Diagnostic information 0 (b0 to b7) and Diagnostic information 2 (b8 to b15). 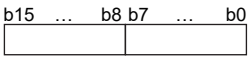 b0 to b7: Diagnostic information 1 (0: Invalid, 1: Valid) b8 to b15: Diagnostic information 2 (0: Invalid, 1: Valid) • When b0 to b7 are 1 (valid), the number of occupied stations, group number, IP address, the accumulated number of timeouts, and the accumulated number of disconnection detections are stored in SD1743 to SD1754. • When b0 to b7 are 0 (invalid), 0 is stored in SD1743 to SD1754. • When b8 to b15 are 1 (valid), the manufacturer code, model code, device version, module information, error code, and detailed module information are stored in SD1758 to SD1767. • When b8 to b15 are 0 (invalid), 0 is stored in SD1758 to SD1767.	S (Status change)	New	QnUDV*1 QnUDPV*1 LCPU*2

Number	Name	Meaning	Explanation	Set by (When Set)	Corresponding ACPU D9□□□	Corresponding CPU
SD1743	Diagnostic information 1*4	Number of occupied stations	After the END instruction in the scan where SM1741 turns on is executed, the number of occupied stations of the device station specified in SD1741 is stored.	S (Status change)	New	QnUDV*1 QnUDPV*1 LCPU*2
SD1744		Group No.	After the END instruction in the scan where SM1741 turns on is executed, the group number of the device station specified in SD1741 is stored.			
SD1745		IP address (lower digits)	• After the END instruction in the scan where SM1741 turns on is executed, the IP address of the device station specified in SD1741 is stored. • When the IP address has not been set in parameter, 0 is stored. 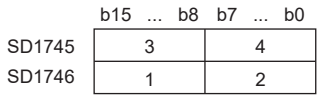 1 to 4: First to fourth bytes			
SD1746		IP address (upper digits)				
SD1753		Accumulated number of timeouts	• After the END instruction in the scan where SM1741 turns on is executed, the accumulated number of timeouts occurred in the device station specified in SD1741 is stored. 0: No timeouts 1 to 65535: Number of timeouts (When the count exceeds 65535, counting is continued from 1 again.)			
SD1754		Accumulated number of disconnection detections	• After the END instruction in the scan where SM1741 turns on is executed, the accumulated number of disconnections detected in the device station specified in SD1741 is stored. 0: No disconnections 1 to 65535: Number of disconnection detections (When the count exceeds 65535, counting is continued from 1 again.)			
SD1758	Diagnostic information 2*4	Manufacturer code	After the END instruction in the scan where SM1741 turns on is executed, the manufacturer code of the device station specified in SD1741 is stored.	S (Status change)	New	QnUDV*1 QnUDPV*1 LCPU*2
SD1760		Model code (lower)	After the END instruction in the scan where SM1741 turns on is executed, the model code of the device station specified in SD1741 is stored.			
SD1761		Model code (upper)				
SD1762		Device version	After the END instruction in the scan where SM1741 turns on is executed, the device version of the device station specified in SD1741 is stored.			
SD1764		Module information	After the END instruction in the scan where SM1741 turns on is executed, the module information of the device station specified in SD1741 is stored.			
SD1765		Error code	After the END instruction in the scan where SM1741 turns on is executed, the error code of the device station specified in SD1741 is stored.			
SD1766		Detailed module information (lower)	After the END instruction in the scan where SM1741 turns on is executed, the detailed module information of the device station specified in SD1741 is stored.			
SD1767		Detailed module information (upper)				

*1 Modules whose serial number (first five digits) is "18112" or later

*2 Built-in Ethernet port LCPU whose serial number (first five digits) is "18112" or later

*3 Modules whose serial number (first five digits) is "19042" or later

*4 If the specified device station is being disconnected, information immediately before the disconnection is stored.

(25)CPU module data backup/restoration function

Number	Name	Meaning	Explanation	Set by (When Set)	Corresponding ACPU M9□□□	Corresponding CPU
SD1925	Number of backup/restoration uncompleted files	Stores the number of files which a backup or restoration is uncompleted.*1	The number of files which a backup or restoration is uncompleted is stored. Total number of files is stored at start, and reduced one each time one file is backed up or restored. "0" is stored when a backup or restoration is completed.	S (Status change)	New	QnUDV*2 QnUDPV*2
SD1926	Backup/restoration progression status	Stores the progression status of a backup or restoration.*1	The progression status of a backup or restoration is stored in percentage. (0 to 100%) "0" is stored at start of a backup or restoration.	S (Status change)	New	QnUDV*2 QnUDPV*2
SD1928	Upper limit value setting for the number of backup data	Upper limit value for the number of backup data is set	Set the upper limit value (1 to 100) for the number of backup data with this register. This register set the value of SD923 at the timing when the CPU module is powered off and on or is reset. Bit5 of SD910 is off: 0 Bit5 of SD910 is on: 1 to 100	S (Status change)/U	New	QnUDV*3 QnUDPV*3

*1 Since the registers cannot be monitored while the automatic restoration function is executed, check the operating status of an automatic restoration with LED on the front side of the CPU module.

*2 Modules whose serial number (first five digits) is "17103" or later

*3 Modules whose serial number (first five digits) is "18052" or later

(26)Built-in I/O function

Number	Name	Meaning	Explanation	Set by (When Set)	Corresponding ACPUD9□□□	Corresponding CPU
SD1830 to SD1833	Functions selected for input signals	Functions selected for input signals	This register stores values indicating functions assigned for input signals. Each signal has 4-bit data. 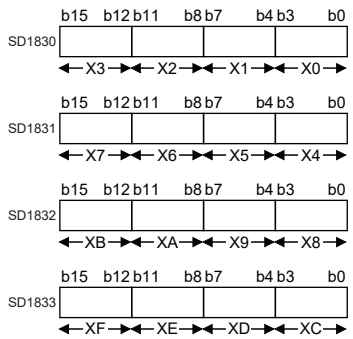 Values are stored according to functions as follows: • 0: General-purpose input function • 1: Interrupt input function • 2: Pulse catch function • 3: Positioning function • 4: High-speed counter function	S (Every END processing)	New	LCPU
SD1834, SD1835	Functions selected for output signals	Functions selected for output signals	This register stores values indicating functions assigned for output signals. Each signal has 4-bit data. 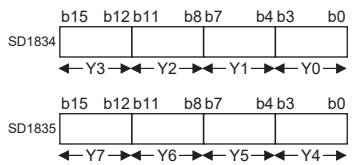 Values are stored according to functions as follows: • 0: General-purpose output function • 3: Positioning function • 4: High-speed counter function	S (Every END processing)	New	LCPU

Number	Name	Meaning	Explanation	Set by (When Set)	Corresponding ACPUD9□□□	Corresponding CPU
SD1836	Operating status of positioning and high-speed counter functions	Operating status of positioning and high-speed counter functions	This register stores the operating status of the positioning function and high-speed counter function. 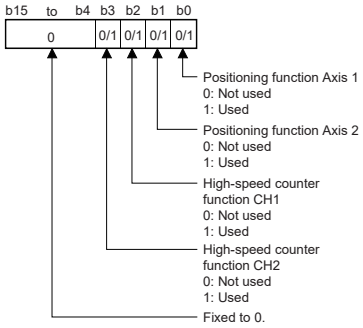 	S (Every END processing)	New	LCPU
SD1840, SD1841	Axis 1 current feed value	Current feed value	This register stores the current position value when the position where OPR control is completed is set as a base point. "0" is stored at power-on or reset of the CPU module. An OP address is stored at the completion of machine OPR control. This register is cleared to "0" when speed control in speed/position switching control is started. • When the current feed value is changed, the value after current value change is stored. • The current position read from a servo amplifier is stored at the completion of absolute position restoration.*1*2 *1 Range: -2147483648 to 2147483647 pulses *2 Since the internal update cycle of the storage value is 1ms, the information of the current feed value may be older than the actual command position by 1ms at maximum depending on the refresh timing at END processing.	S (Every END processing)	New	LCPU
SD1842, SD1843	Axis 1 current speed	Current speed	This register stores the current speed. (Fractions are not stored. If the current speed is slower than 1 pulse/s, "0" may be displayed.)*1*2 *1 Range: 0 to 200000 pulses *2 Since the internal update cycle of the storage value is 1ms, the information of the current speed value may be older than the actual command position by 1ms at maximum depending on the refresh timing at END processing.	S (Every END processing)	New	LCPU
SD1844	Axis 1 axis operation status	Axis operation status	This register stores the axis operating status. • -1: Error occurring • 0: Standing by • 1: Stopped • 2: In JOG operation • 3: In OPR • 4: In position control • 5: In speed-position control (speed) (speed control in speed/position switching control) • 6: In speed-position control (position) (position control in speed/position switching control) • 7: Decelerating (axis stop ON) • 8: Decelerating (JOG start OFF) • 9: In high-speed OPR • 10: In speed control • 11: Analyzing	S (Every END processing)	New	LCPU

Number	Name	Meaning	Explanation	Set by (When Set)	Corresponding ACPUD9□□□	Corresponding CPU
SD1845	Axis 1 error code	Error code	• This register stores the error code of the present axis error. • If another error occurs while an axis error occurs, the latest error code is not stored. • This register is cleared to "0" by turning on SM1850.	S (Every END processing)	New	LCPU
SD1846	Axis 1 warning code	Warning code	• This register stores the warning code of the present axis warning. • If another axis warning occurs, the latest warning code is written to this register. • This register is cleared to "0" by turning on SM1850.	S (Every END processing)	New	LCPU
SD1847	Axis 1 external I/O signal	External I/O signals	• This register stores the on/off status of external I/O signals. • When an OPR method with the OPR retry function (Near-point dog method, Count 1, Count 2) is performed, a value indicating the status of the upper limit signal or the lower limit signal is stored to the external command signal.*1 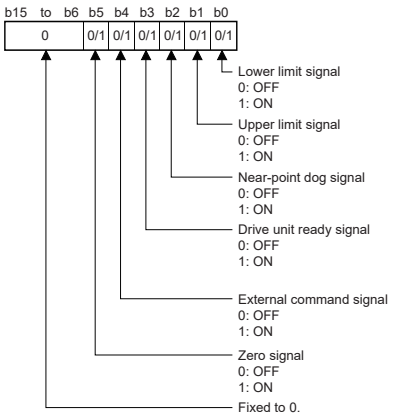 *1 When an OPR method with the OPR retry function is performed even once, a value indicating the status of the upper limit signal or the lower limit signal will be stored until when speed/position switching control is started.	S (Every END processing)	New	LCPU
SD1848, SD1849	Axis 1 movement amount after near-point dog ON	Movement amount after near-point dog ON	• This register stores "0" when machine OPR control is started. • After machine OPR control is started, this register stores a travel distance from the point where the near-point dog signal turns on (The point is set to "0".) to the point where machine OPR control is completed.*1 • When an OPR method is set to Stopper 3, this register always stores "0". *1 Range: 0 to 2147483647 pulses	S (Every END processing)	New	LCPU
SD1850	Axis 1 Data No. of positioning being executed	Data No. of positioning being executed	• This register stores the data No. of positioning being executed. (A storage value will be held until the next control starts.) • "0" is stored when JOG operation or machine OPR control is started. • "1" is stored when high-speed OPR control is started. • "1" is stored when positioning control is started by the IPDSTRT1 or IPDSTRT2 instruction. • If an error occurs at the start of positioning control, the previous value will be held.	S (Every END processing)	New	LCPU

Number	Name	Meaning	Explanation	Set by (When Set)	Corresponding ACPUD9□□□	Corresponding CPU
SD1860, SD1861	Axis 2 current feed value	Current feed value	This register stores the current position value when the position where OPR control is completed is set as a base point. "0" is stored at power-on or reset of the CPU module. An OP address is stored at the completion of machine OPR control. This register is cleared to "0" when speed control in speed/position switching control is started. • When the current feed value is changed, the value after current value change is stored. • The current position read from a servo amplifier is stored at the completion of absolute position restoration.*1*2 *1 Range: -2147483648 to 2147483647 pulses *2 Since the internal update cycle of the storage value is 1ms, the information of the current feed value may be older than the actual command position by 1ms at maximum depending on the refresh timing at END processing.	S (Every END processing)	New	LCPU
SD1862, SD1863	Axis 2 current speed	Current speed	This register stores the current speed. (Fractions are not stored. If the current speed is slower than 1 pulse/s, "0" may be displayed.)*1*2 *1 Range: 0 to 200000 pulses *2 Since the internal update cycle of the storage value is 1ms, the information of the current speed value may be older than the actual command position by 1ms at maximum depending on the refresh timing at END processing.	S (Every END processing)	New	LCPU
SD1864	Axis 2 axis operation status	Axis operation status	This register stores the axis operating status. • -1: Error occurring • 0: Standing by • 1: Stopped • 2: In JOG operation • 3: In OPR • 4: In position control • 5: In speed-position control (speed) (speed control in speed/position switching control) • 6: In speed-position control (position) (position control in speed/position switching control) • 7: Decelerating (axis stop ON) • 8: Decelerating (JOG start OFF) • 9: In high-speed OPR • 10: In speed control • 11: Analyzing	S (Every END processing)	New	LCPU
SD1865	Axis 2 error code	Error code	• This register stores the error code of the present axis error. • If another error occurs while an axis error occurs, the latest error code is not stored. • This register is cleared to "0" by turning on SM1870.	S (Every END processing)	New	LCPU
SD1866	Axis 2 warning code	Warning code	• This register stores the warning code of the present axis warning. • If another axis warning occurs, the latest warning code is written to this register. • This register is cleared to "0" by turning on SM1870.	S (Every END processing)	New	LCPU

Number	Name	Meaning	Explanation	Set by (When Set)	Corresponding ACPUD9□□□	Corresponding CPU
SD1867	Axis 2 external I/O signals	External I/O signals	• This register stores the on/off status of external I/O signals. When an OPR method with the OPR retry function (Near-point dog method, Count 1, Count 2) is performed, a value indicating the status of the upper limit signal or the lower limit signal is stored to the external command signal.*1 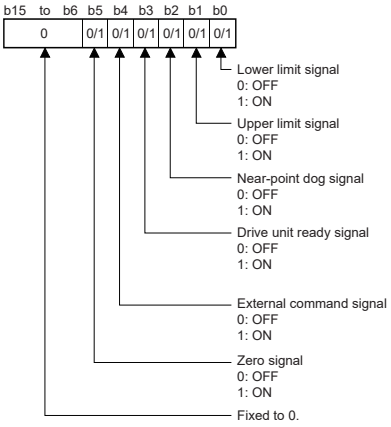 *1 When an OPR method with the OPR retry function is performed even once, a value indicating the status of the upper limit signal or the lower limit signal will be stored until when speed/position switching control is started.	S (Every END processing)	New	LCPU
SD1868, SD1869	Axis 2 movement amount after near-point dog ON	Movement amount after near-point dog ON	• This register stores "0" when machine OPR control is started. • After machine OPR control is started, this register stores a travel distance from the point where the near-point dog signal turns on (The point is set to "0".) to the point where machine OPR control is completed. *1 • When an OPR method is set to Stopper 3, this register always stores "0". *1 Range: 0 to 2147483647 pulses	S (Every END processing)	New	LCPU
SD1870	Axis 2 Data No. of positioning being executed	Data No. of positioning being executed	• This register stores the data No. of positioning being executed. (A storage value will be held until the next control starts.) • "0" is stored when JOG operation or machine OPR control is started. • "1" is stored when high-speed OPR control is started. • "1" is stored when positioning control is started by the IPDSTRT1 or IPDSTRT2 instruction. • If an error occurs at the start of positioning control, the previous value will be held.	S (Every END processing)	New	LCPU
SD1880, SD1881	CH1 current value	CH1 current value	• This register stores the current counter value of CH1 at END processing. • When the ICCNTRD1 instruction is executed, this register is updated by the current value at that moment. The current value is updated at END processing and by the ICCNTRD1 instruction only when Normal Mode is set for Operation Mode Setting (high-speed counter function parameter). The range of a value that can be read is from -2147483648 to 2147483647.	S (Every END processing/ Instruction execution)	New	LCPU

Number	Name	Meaning	Explanation	Set by (When Set)	Corresponding ACPUD9□□□	Corresponding CPU
SD1882	CH1 status monitor	CH1 status monitor	This register stores each status of CH1. 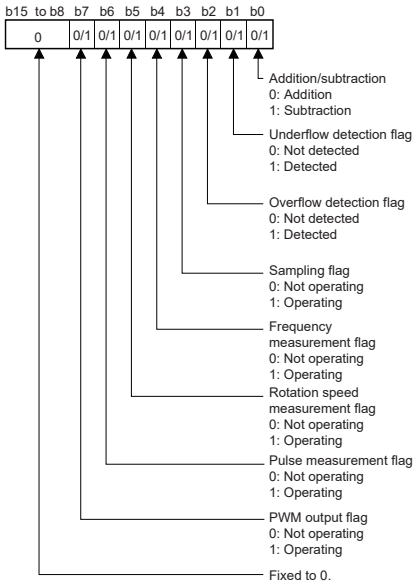	S (Every END processing)	New	LCPU
SD1883	CH1 external I/O status monitor	CH1 external I/O status monitor	• This register stores a value indicating the external I/O signal status of CH1. • Unused signal status is fixed at off. • When Normal Mode is set for Operation Mode Setting (high-speed counter function parameter), a value according to the setting configured for Function Input Logic Setting (high-speed counter function parameter) is stored in the function input status. Therefore, when a voltage is applied to the function input terminal while Negative logic is set for Function input logic setting, this register turns off. • When other than A Phase/B Phase is selected for Count Source Selection (high-speed counter function parameter), the phase A input status and phase B input status are fixed at off. 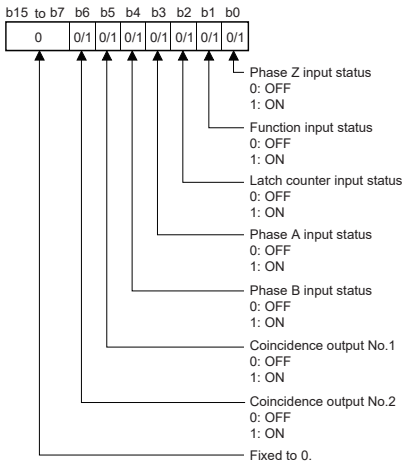	S (Every END processing)	New	LCPU
SD1884	CH1 operation mode monitor	CH1 operation mode monitor	This register stores a value indicating the operation mode for high-speed counter of CH1 set by the parameter. • 0: Not used • 1: Normal mode • 2: Frequency measurement mode • 3: Rotation speed measurement mode • 4: Pulse measurement mode • 5: PWM output mode	S (Every END processing)	New	LCPU

Number	Name	Meaning	Explanation	Set by (When Set)	Corresponding ACPUD9□□□	Corresponding CPU
SD1885	CH1 counter type monitor	CH1 counter type monitor	This register stores a value indicating the counter type for high-speed counter of CH1 set by the parameter. Counter selection is disabled (fixed at "0") when a value stored to CH1 operation mode monitor (SD1884) is other than "1" (normal mode). • 0: Linear counter • 1: Ring counter	S (Every END processing)	New	LCPU
SD1886	CH1 selected counter function	CH1 selected counter function	This register stores a value indicating the selected counter function for high-speed counter of CH1 set by the parameter. Counter selection is disabled (fixed at "0") when a value stored to CH1 operation mode monitor (SD1884) is other than "1" (normal mode). • 0: Count disabling function • 1: Latch counter function • 2: Sampling counter function • 3: Count disabling/preset function • 4: Latch counter/preset function	S (Every END processing)	New	LCPU
SD1887	CH1 error code	CH1 error code	This register stores the error code of an error occurred in CH1.	S (Every END processing)	New	LCPU
SD1888	CH1 warning code	CH1 warning code	This register stores the warning code of a warning occurred in CH1.	S (Every END processing)	New	LCPU
SD1900, SD1901	CH2 current value	CH2 current value	• This register stores the current counter value of CH2 at END processing. • When the ICCNTRD2 instruction is executed, this register is updated by the current value at that moment. The current value is updated at END processing and by the ICCNTRD2 instruction only when Normal Mode is set for Operation Mode Setting (high-speed counter function parameter). The range of a value that can be read is from -2147483648 to 2147483647.	S (Every END processing/ Instruction execution)	New	LCPU
SD1902	CH2 status monitor	CH2 status monitor	This register stores each status of CH2. 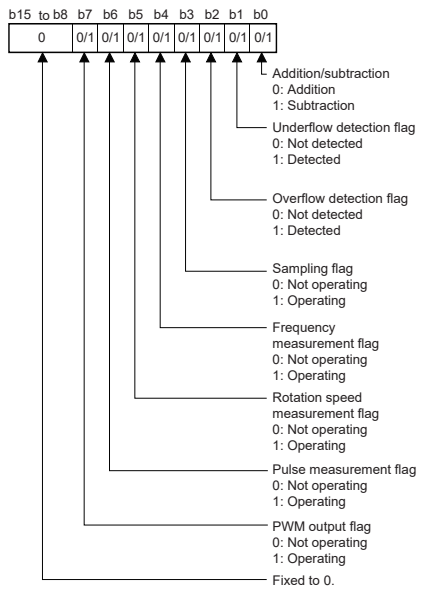	S (Every END processing)	New	LCPU

Number	Name	Meaning	Explanation	Set by (When Set)	Corresponding ACPUD9□□□	Corresponding CPU
SD1903	CH2 external I/O status monitor	CH2 external I/O status monitor	• This register stores a value indicating the external I/O signal status of CH2. • Unused signal status is fixed at off. • When Normal Mode is set for Operation Mode Setting (high-speed counter function parameter), a value according to the setting configured for Function Input Logic Setting (high-speed counter function parameter) is stored in the function input status. Therefore, when a voltage is applied to the function input terminal while Negative logic is set for Function input logic setting, this register turns off. • When other than A Phase/B Phase is selected for Count Source Selection (high-speed counter function parameter), the phase A input status and phase B input status are fixed at off. 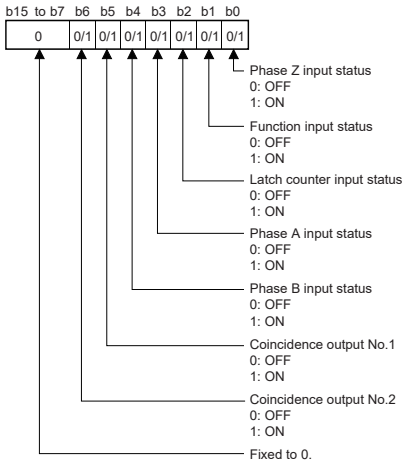	S (Every END processing)	New	LCPU
SD1904	CH2 operation mode monitor	CH2 operation mode monitor	This register stores a value indicating the operation mode for high-speed counter of CH2 set by the parameter. • 0: Unused • 1: Normal mode • 2: Frequency measurement mode • 3: Rotation speed measurement mode • 4: Pulse measurement mode • 5: PWM output mode	S (Every END processing)	New	LCPU
SD1905	CH2 counter type monitor	CH2 counter type monitor	This register stores a value indicating the counter type for high-speed counter of CH2 set by the parameter. Counter selection is disabled (fixed at "0") when a value stored to CH2 operation mode monitor (SD1904) is other than "1" (normal mode). • 0: Linear counter • 1: Ring counter	S (Every END processing)	New	LCPU
SD1906	CH2 selected counter function	CH2 selected counter function	This register stores a value indicating the selected counter function for high-speed counter of CH2 set by the parameter. Counter selection is disabled (fixed at "0") when a value stored to CH2 operation mode monitor (SD1904) is other than "1" (normal mode). • 0: Count disabling function • 1: Latch counter function • 2: Sampling counter function • 3: Count disabling/preset function • 4: Latch counter/preset function	S (Every END processing)	New	LCPU
SD1907	CH2 error code	CH2 error code	This register stores the error code of an error occurred in CH2.	S (Every END processing)	New	LCPU
SD1908	CH2 warning code	CH2 warning code	This register stores the warning code of a warning occurred in CH2.	S (Every END processing)	New	LCPU

(27)Data logging

Number	Name	Meaning	Explanation	Set by (When Set)	Corresponding ACPU D9□□□	Corresponding CPU
SD1940, SD1941	Data logging setting No.1 Latest file No.	Latest file No.	This register stores the latest file number. This register is cleared to "0" by a stop command from the CPU Module Logging Configuration Tool.	S (Status change)	New	QnUDV QnUDPV LCPU
SD1942, SD1943	Data logging setting No.1 Oldest file No.	Oldest file No.	This register stores the oldest file number. This register is cleared to "0" by a stop command from the CPU Module Logging Configuration Tool.	S (Status change)	New	QnUDV QnUDPV LCPU
SD1944	Data logging setting No.1 Free buffer space	Free buffer space	This register stores free buffer space (unit: 1K byte). If the value is small, processing overflow may occur. For trigger logging, this register stores the buffer size until when data are collected by the number of records after trigger. This register is cleared to "0" by a stop command from the CPU Module Logging Configuration Tool.	S (Status change)	New	QnUDV QnUDPV LCPU
SD1945	Data logging setting No.1 Processing timeout count	Number of times processing overflow occurred	This register stores the number of times that data logging processing overflow occurred. If an overflow occurs, some data may not be collected. When the storage value reaches to 65535, count is resumed from "0". If Stop is specified for Operation occurring when number of saved files is exceeded, processing overflow may occur from when data collection by the number of specified storage files is completed and until when data logging is stopped. This register is cleared to "0" by the registration of the setting or a stop command from CPU Module Logging Configuration Tool.	S (Error)	New	QnUDV QnUDPV LCPU
SD1946	Data logging setting No.1 Data logging error cause	Data logging error cause	This register stores the cause of an error that occurred during data logging. • 0: No error • Other than 0: For values stored at error occurrence, refer to the errors that occurs in data logging described in the following. (📖 QnUDVCPU/LCPU User's Manual (Data Logging Function)) This register is cleared to "0" by the registration of the setting or a stop command from CPU Module Logging Configuration Tool.	S (Error)	New	QnUDV QnUDPV LCPU
SD1947	Data logging setting No.1 Data logging file transfer function error code	Data logging file transfer function error code	This register stores the error code of the latest error detected during execution of the data logging file transfer function. • 0: No error • Other than 0: For values stored at error occurrence, refer to the errors that occurs in data logging described in the following. (📖 QnUDVCPU/LCPU User's Manual (Data Logging Function)) This register is cleared to "0" by the data logging start command from the CPU Module Logging Configuration Tool.	S (Error)	New	QnUDV QnUDPV LCPU[*1]

Number	Name	Meaning	Explanation	Set by (When Set)	Corresponding ACPU D9□□□	Corresponding CPU
SD1950 to SD1957	Data logging setting No.2	Same as in data logging setting No.1	Same as in data logging setting No.1 (SD1940 to SD1947)	Same as in data logging setting No.1	New	QnUDV QnUDPV LCPU*1
SD1960 to SD1967	Data logging setting No.3					
SD1970 to SD1977	Data logging setting No.4					
SD1980 to SD1987	Data logging setting No.5					
SD1990 to SD1997	Data logging setting No.6					
SD2000 to SD2007	Data logging setting No.7					
SD2010 to SD2017	Data logging setting No.8					
SD2020 to SD2027	Data logging setting No.9					
SD2030 to SD2037	Data logging setting No.10					

*1 Modules whose serial number (first five digits) is "12112" or later support the data logging file transfer function error code areas.

Appendix 4 Battery Life

The batteries installed on the CPU module and SRAM card are used to retain data in the program memory, standard RAM (including an extended SRAM cassette), and latch devices during the power failure. Special relays SM51 and SM52 turn on due to the battery voltage drop. Even if the special relays turn on, the program and retained data are not deleted immediately.
After the special relay SM51 turns on, replace the battery quickly within the backup power time for three minutes.

Point

SM51 turns on when the battery voltage drops below the specified value, and remains on even after the voltage is recovered to the normal value.
SM52 turns on when the battery voltage drops below the specified value, and turns off when the voltage is recovered to the normal value.
After SM51 and/or SM52 turns on, replace the battery quickly.

SM51 and SM52 turn on when the battery voltage of the CPU module or SRAM card is lowered.
To identify the specific battery of the memory of which voltage is lowered, check the contents of the special resisters SD51 and SD52.

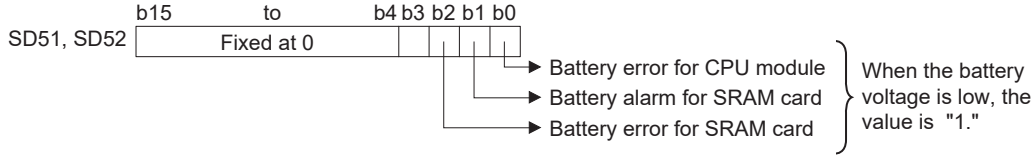

For details of SD51 and SD52, refer to Page 527, Appendix 3.

Point

- As long as the programmable controller is powered on, the data is retained regardless of the installation status of a battery.
- A battery of the CPU module cannot retain data in the SRAM card.
  A battery of the SRAM card cannot retain data in the CPU module.

Appendix 4.1 Display of battery consumption and reduction measures of the consumption

(1) Battery consumption Note Appx.1

The battery consumption represents consumption of the CPU module battery energy.*1
The larger the battery consumption value is, the more battery per time unit is consumed.

The battery consumption depends on the factors of (a) to (c) as follows.
The following table shows the relationship of the factors and the battery consumption.

Factor of battery consumption			Battery consumption
(a) Battery life-prolonging function*2	(b) Module error log in standard RAM*3	(c) Size of file register file in standard RAM (S_R) <Unit: word>	
Set	----	----	1
Not set	Absent	No file registers or 0K < $S_R \leq$ 128K	2
		128K < $S_R \leq$ 384K	3
		384K < $S_R \leq$ 640K	4
		640K < S_R	5
	Present	Refer to a table below.	

The following table shows the battery consumption when the module error log data are stored to the standard RAM by the module error collection function.

(c) Size of file register file in standard RAM (S_R) <Unit: word>	Battery consumption			
	Q00U/Q01U/Q02U/ Q03UD(E)/ Q04UD(E)HCPU	Q06UD(E)HCPU	Q10UD(E)H/ Q13UD(E)H/ Q20UD(E)H/ Q26UD(E)HCPU	Q50UDEH/ Q100UDEHCPU
0K $\leq S_R \leq$ 128K	2	3	3	3
128K < $S_R \leq$ 384K	----	3	4	4
384K < $S_R \leq$ 640K	----	----	4	5
640K < S_R	----	----	----	5

*1 Applicable to the Q02UCPU, Q03UDCPU, Q04UDHCPU, and Q06UDHCPU if the serial numbers (first five digits) are "10012" or later.
The current consumption level can be checked by referring to SD118 where the battery consumption value is stored.

*2 For details of the battery life-prolonging function, refer to the following.
QnUCPU User's Manual (Function Explanation, Program Fundamentals)

*3 For details of the module error log function, refer to the following.
QnUCPU User's Manual (Function Explanation, Program Fundamentals)

Note Appx.1 Basic Redundant High performance Process
The Basic model QCPU, High Performance model QCPU, Process CPU, Redundant CPU, High-speed Universal model QCPU, and Universal model Process CPU do not support this function.

(2) Reduction measures of battery consumption

The following describes measures for reducing battery consumption.

- Enable the battery life-prolonging function.
- When storing a file register in standard the RAM, minimize the file register file.
- By performing the latch data backup function (to standard ROM), the battery life-prolonging function will be enabled regardless of the parameter setting.*4

  If not powering on the programmable controller for a long period of time for shipment or other reason, back up the data to the standard ROM.

*4 Except when the battery life-prolonging function has already been enabled.

Appendix 4.2 Battery lives of CPU modules

(1) Battery lives of Basic model QCPUs

(a) Q6BAT

CPU module	Power-on time ratio*1	Battery life		
		Q6BAT		
		Guaranteed value*2	Actual service value (Reference value)*3	After SM52 turned on (Backup power time after an alarm*4)
Q00JCPU	0%	26,000 hours 2.96 years	43,800 hours 5.00 years	710 hours 30 days
	30%	37,142 hours 4.23 years		
	50%	43,800 hours 5.00 years		
	70%			
	100%			
Q00CPU	0%	26,000 hours 2.96 years	43,800 hours 5.00 years	710 hours 30 days
	30%	37,142 hours 4.23 years		
	50%	43,800 hours 5.00 years		
	70%			
	100%			
Q01CPU	0%	5,600 hours 0.63 years	25,175 hours 2.87 years	420 hours 18 days
	30%	8,000 hours 0.91 years	35,964 hours 4.10 years	
	50%	11,200 hours 1.27 years	43,800 hours 5.00 years	
	70%	18,666 hours 2.13 years		
	100%	43,800 hours 5.00 years		

*1 The power-on time ratio indicates the ratio of programmable controller power-on time to one day (24 hours).
(When the total power-on time is 12 hours and the total power-off time is 12 hours, the power-on time ratio is 50%.)

*2 The guaranteed value represents a battery life at 70°C, which is calculated based on the characteristic values of manufacturer-supplied memory (SRAM) and on the assumption of storage within the ambient temperature range of -25 to 75°C (operating ambient temperature of 0 to 55°C).

*3 The actual service value (reference value) represents a battery life that is calculated based on the values measured at storage ambient temperature of 40°C. This value is intended for reference only, as it varies with characteristics of the memory.

*4 In the following status, the backup time after power off is 3 minutes.
- The battery connector is disconnected.
- The lead wire of the battery is broken.

Point

- Use the battery within the time shown by the guaranteed value of the battery life.
- If the battery may be used exceeding the time shown by the guaranteed battery life value, perform the following.
  - Perform boot operation to protect a program even if the battery dies at the programmable controller power-off.
  - Back up programs and data after SM52 turned on (within the backup power time after an alarm).
- When the battery is not connected to the CPU module, its service life is five years.
- When the battery-low special relay SM52 turns on, immediately change the battery.
  Even if an alarm has not yet occurred, it is recommended to replace the battery periodically according to the operating condition.

(2) Battery lives of High Performance model QCPU, Process CPU, and Redundant CPU

(a) Q6BAT

CPU module	Power-on time ratio[*1]	Battery life[*5]		
		Q6BAT		
		Guaranteed value[*2]	Actual service value (Reference value)[*3]	After SM52 turned on (Backup power time after an alarm[*4])
Q02CPU	0%	30,000 hours 3.42 years	43,800 hours 5.00 years	120 hours 5 days
	30%	42,857 hours 4.89 years		
	50%	43,800 hours 5.00 years		
	70%			
	100%			
Q02HCPU Q06HCPU	0%	2,341 hours 0.26 years	18,364 hours 2.09 years	120 hours 5 days
	30%	3,344 hours 0.38 years	26,234 hours 2.99 years	
	50%	4,682 hours 0.53 years	36,728 hours 4.19 years	
	70%	7,803 hours 0.89 years	43,800 hours 5.00 years	
	100%	43,800 hours 5.00 years		
Q02PHCPU Q06PHCPU	0%	1,897 hours 0.21 years	14,229 hours 1.62 years	96 hours 4 days
	30%	2,710 hours 0.30 years	20,327 hours 2.32 years	
	50%	3,794 hours 0.43 years	28,458 hours 3.25 years	
	70%	6,323 hours 0.72 years	43,800 hours 5.00 years	
	100%	43,800 hours 5.00 years		
Q12HCPU Q25HCPU Q12PHCPU Q25PHCPU Q12PRHCPU Q25PRHCPU	0%	1,260 hours 0.14 years	7,755 hours 0.88 years	48 hours 2 days
	30%	1,800 hours 0.20 years	11,079 hours 1.26 years	
	50%	2,520 hours 0.28 years	15,510 hours 1.77 years	
	70%	4,200 hours 0.47 years	25,850 hours 2.95 years	
	100%	43,800 hours 5.00 years	43,800 hours 5.00 years	

(b) Q7BATN/Q7BAT

CPU module	Power-on time ratio[*1]	Battery life[*5]					
		Q7BATN			Q7BAT		
		Guaranteed value[*2]	Actual service value (Reference value)[*3]	After SM52 turned on (Backup power time after an alarm[*4])	Guaranteed value[*2]	Actual service value (Reference value)[*3]	After SM52 turned on (Backup power time after an alarm[*4])
Q02CPU	0%	43,800 hours 5.00 years	43,800 hours 5.00 years	480 hours 20 days	43,800 hours 5.00 years	43,800 hours 5.00 years	240 hours 10 days
	30%						
	50%						
	70%						
	100%						
Q02HCPU Q06HCPU	0%	12,926 hours 1.48 years	43,800 hours 5.00 years	480 hours 20 days	5,000 hours 0.57 years	43,800 hours 5.00 years	240 hours 10 days
	30%	18,465 hours 2.11 years			7,142 hours 0.81 years		
	50%	25,852 hours 2.95 years			10,000 hours 1.14 years		
	70%	43,086 hours 4.92 years			16,666 hours 1.90 years		
	100%	43,800 hours 5.00 years			43,800 hours 5.00 years		
Q02PHCPU Q06PHCPU	0%	5,806 hours 0.66 years	43,800 hours 5.00 years	480 hours 20 days	4,051 hours 0.46 years	38,727 hours 4.42 years	192 hours 8 days
	30%	8,294 hours 0.95 years			5,787 hours 0.66 years	43,800 hours 5.00 years	
	50%	11,611 hours 1.33 years			8,102 hours 0.92 years		
	70%	19,352 hours 2.21 years			13,503 hours 1.54 years		
	100%	43,800 hours 5.00 years			43,800 hours 5.00 years		
Q12HCPU Q25HCPU Q12PHCPU Q25PHCPU Q12PRHCPU Q25PRHCPU	0%	10,850 hours 1.24 years	24,276 hours 2.77 years	480 hours 20 days	2,900 hours 0.33 years	21,107 hours 2.40 years	96 hours 4 days
	30%	15,500 hours 1.77 years	34,681 hours 3.96 years		4,142 hours 0.47 years	30,153 hours 3.44 years	
	50%	21,699 hours 2.48 years	43,800 hours 5.00 years		5,800 hours 0.66 years	42,214 hours 4.81 years	
	70%	36,166 hours 4.13 years			9,666 hours 1.10 years	43,800 hours 5.00 years	
	100%	43,800 hours 5.00 years			43,800 hours 5.00 years		

(c) Q8BAT

CPU module	Power-on time ratio*1	Battery life*5		
		Q8BAT		
		Guaranteed value*2	Actual service value (Reference value)*3	After SM52 turned on (Backup power time after an alarm*4)
Q02CPU	0%	43,800 hours 5.00 years	43,800 hours 5.00 years	240 hours 10 days
	30%			
	50%			
	70%			
	100%			
Q02HCPU Q06HCPU	0%	20,498 hours 2.34 years	43,800 hours 5.00 years	240 hours 10 days
	30%	29,959 hours 3.42 years		
	50%	41,785 hours 4.77 years		
	70%	43,800 hours 5.00 years		
	100%			
Q02PHCPU Q06PHCPU	0%	16,609 hours 1.89 years	43,800 hours 5.00 years	192 hours 8 days
	30%	23,727 hours 2.70 years		
	50%	33,218 hours 3.79 years		
	70%	43,800 hours 5.00 years		
	100%			
Q12HCPU Q25HCPU Q12PHCPU Q25PHCPU Q12PRHCPU Q25PRHCPU	0%	11,038 hours 1.26 years	29,609 hours 3.38 years	96 hours 4 days
	30%	16,200 hours 1.80 years	42,311 hours 4.83 years	
	50%	22,075 hours 2.52 years	43,800 hours 5.00 years	
	70%	37,055 hours 4.23 years		
	100%	43,800 hours 5.00 years		

*1 The power-on time ratio indicates the ratio of programmable controller power-on time to one day (24 hours).
(When the total power-on time is 12 hours and the total power-off time is 12 hours, the power-on time ratio is 50%.)

*2 The guaranteed value represents a battery life at 70°C, which is calculated based on the characteristic values of manufacturer-supplied memory (SRAM) and on the assumption of storage ambient temperature range of -25 to 75°C (operating ambient temperature of 0 to 55°C).

*3 The actual service value (reference value) represents a battery life that is calculated based on the values measured at storage ambient temperature of 40°C. This value is intended for reference only, as it varies with characteristics of the memory.

*4 In the following status, the backup time after power off is 3 minutes.
- The battery connector is disconnected.
- The lead wire of the battery is broken.

*5 For the High Performance model QCPU, these values are applicable when the serial number (first five digits) of the CPU module is "05011" or later.
For the battery life of the CPU module whose serial number (first five digits) is "05010" or earlier, refer to Page 662, Appendix 6.3.

Point

- Use the battery within the time shown by the guaranteed value of the battery life.
- If the battery may be used exceeding the time shown by the guaranteed battery life value, perform the following.
  - Perform boot operation to protect a program even if the battery dies at the programmable controller power-off.
  - Back up programs and data after SM52 turned on (within the backup power time after an alarm).
- When the battery is not connected to the CPU module, its service life is five years.
- When the battery-low special relay SM52 turns on, immediately change the battery.
  Even if an alarm has not yet occurred, it is recommended to replace the battery periodically according to the operating condition.

(3) Battery lives of the Universal model QCPU (other than QnUDVCPU and QnUDPVCPU)

(a) Q6BAT

CPU module	Battery consumption[*1]	Power-on time ratio[*2]	Battery life		
			Q6BAT		
			Guaranteed value[*3]	Actual service value (Reference value)[*4]	After SM52 turned on (Backup power time after an alarm[*5])
Q00U(J)CPU Q01UCPU Q02UCPU Q03UD(E)CPU	1	0%	30,100 hours 3.44 years	43,800 hours 5.00 years	600 hours 25 days
		30%	43,000 hours 4.91 years		
		50%	43,800 hours 5.00 years		
		70%			
		100%			
	2	0%	25,300 hours 2.89 years	43,800 hours 5.00 years	600 hours 25 days
		30%	36,100 hours 4.12 years		
		50%	43,800 hours 5.00 years		
		70%			
		100%			
Q04UD(E)HCPU	1	0%	30,100 hours 3.44 years	43,800 hours 5.00 years	600 hours 25 days
		30%	43,000 hours 4.91 years		
		50%	43,800 hours 5.00 years		
		70%			
		100%			
	2	0%	4,300 hours 0.49 years	32,100 hours 3.66 years	384 hours 16 days
		30%	6,100 hours 0.70 years	43,800 hours 5.00 years	
		50%	8,600 hours 0.98 years		
		70%	14,300 hours 1.63 years		
		100%	43,800 hours 5.00 years		

CPU module	Battery consumption[*1]	Power-on time ratio[*2]	Battery life		
			Q6BAT		
			Guaranteed value[*3]	Actual service value (Reference value)[*4]	After SM52 turned on (Backup power time after an alarm[*5])
Q06UD(E)HCPU	1	0%	25,300 hours 2.89 years	43,800 hours 5.00 years	600 hours 25 days
		30%	36,100 hours 4.12 years		
		50%	43,800 hours 5.00 years		
		70%			
		100%			
	2	0%	4,200 hours 0.48 years	32,100 hours 3.66 years	384 hours 16 days
		30%	6,000 hours 0.68 years	43,800 hours 5.00 years	
		50%	8,400 hours 0.96 years		
		70%	14,000 hours 1.60 years		
		100%	43,800 hours 5.00 years		
	3	0%	2,300 hours 0.26 years	19,200 hours 2.19 years	192 hours 8 days
		30%	3,200 hours 0.37 years	27,400 hours 3.13 years	
		50%	4,600 hours 0.53 years	38,400 hours 4.38 years	
		70%	7,600 hours 0.87 years	43,800 hours 5.00 years	
		100%	43,800 hours 5.00 years		

CPU module	Battery consumption[*1]	Power-on time ratio[*2]	Battery life		
			Q6BAT		
			Guaranteed value[*3]	Actual service value (Reference value)[*4]	After SM52 turned on (Backup power time after an alarm[*5])
Q10UD(E)HCPU Q13UD(E)HCPU Q20UD(E)HCPU Q26UD(E)HCPU	1	0%	22,600 hours 2.58 years	43,800 hours 5.00 years	600 hours 25 days
		30%	32,200 hours 3.68 years		
		50%	43,800 hours 5.00 years		
		70%			
		100%			
	2	0%	4,100 hours 0.47 years	26,200 hours 2.99 years	384 hours 16 days
		30%	5,800 hours 0.66 years	37,400 hours 4.27 years	
		50%	8,200 hours 0.94 years	43,800 hours 5.00 years	
		70%	13,600 hours 1.55 years		
		100%	43,800 hours 5.00 years		
	3	0%	2,300 hours 0.26 years	18,600 hours 2.12 years	192 hours 8 days
		30%	3,200 hours 0.37 years	26,500 hours 3.03 years	
		50%	4,600 hours 0.53 years	37,200 hours 4.25 years	
		70%	7,600 hours 0.87 years	43,800 hours 5.00 years	
		100%	43,800 hours 5.00 years		
	4	0%	1,500 hours 0.17 years	13,800 hours 1.58 years	144 hours 6 days
		30%	2,100 hours 0.24 years	19,700 hours 2.25 years	
		50%	3,000 hours 0.34 years	27,600 hours 3.15 years	
		70%	5,000 hours 0.57 years	43,800 hours 5.00 years	
		100%	43,800 hours 5.00 years		

CPU module	Battery consumption[*1]	Power-on time ratio[*2]	Battery life		
			Q6BAT		
			Guaranteed value[*3]	Actual service value (Reference value)[*4]	After SM52 turned on (Backup power time after an alarm[*5])
Q50UDEHCPU Q100UDEHCPU	1	0%	19,000 hours 2.16 years	43,800 hours 5.00 years	600 hours 25 days
		30%	27,100 hours 3.09 years		
		50%	38,000 hours 4.33 years		
		70%	43,800 hours 5.00 years		
		100%			
	2	0%	4,000 hours 0.45 years	25,000 hours 2.85 years	384 hours 16 days
		30%	5,700 hours 0.65 years	35,700 hours 4.07 years	
		50%	8,000 hours 0.91 years	43,800 hours 5.00 years	
		70%	13,300 hours 1.51 years		
		100%	43,800 hours 5.00 years		
	3	0%	2,200 hours 0.25 years	18,000 hours 2.05 years	192 hours 8 days
		30%	3,100 hours 0.35 years	25,700 hours 2.93 years	
		50%	4,400 hours 0.50 years	36,000 hours 4.10 years	
		70%	7,300 hours 0.83 years	43,800 hours 5.00 years	
		100%	43,800 hours 5.00 years		
	4	0%	1,500 hours 0.17 years	13,500 hours 1.54 years	144 hours 6 days
		30%	2,100 hours 0.24 years	19,200 hours 2.19 years	
		50%	3,000 hours 0.34 years	27,000 hours 3.08 years	
		70%	5,000 hours 0.57 years	43,800 hours 5.00 years	
		100%	43,800 hours 5.00 years		

CPU module	Battery consumption[*1]	Power-on time ratio[*2]	Battery life		
			Q6BAT		
			Guaranteed value[*3]	Actual service value (Reference value)[*4]	After SM52 turned on (Backup power time after an alarm[*5])
Q50UDEHCPU Q100UDEHCPU	5	0%	1,160 hours 0.13 years	10,800 hours 1.23 years	120 hours 5 days
		30%	1,600 hours 0.18 years	15,400 hours 1.75 years	
		50%	2,300 hours 0.26 years	21,600 hours 2.46 years	
		70%	3,800 hours 0.43 years	36,000 hours 4.10 years	
		100%	43,800 hours 5.00 years	43,800 hours 5.00 years	

(b) Q7BATN/Q7BAT

CPU module	Battery consumption[*1]	Power-on time ratio[*2]	Battery life					
			Q7BATN			Q7BAT		
			Guaranteed value[*3]	Actual service value (Reference value)[*4]	After SM52 turned on (Backup power time after an alarm[*5])	Guaranteed value[*3]	Actual service value (Reference value)[*4]	After SM52 turned on (Backup power time after an alarm[*5])
Q00U(J)CPU Q01UCPU Q02UCPU Q03UD(E)CPU	1	0%	43,800 hours 5.00 years	43,800 hours 5.00 years	600 hours 25 days	43,800 hours 5.00 years	43,800 hours 5.00 years	600 hours 25 days
		30%						
		50%						
		70%						
		100%						
	2	0%	43,800 hours 5.00 years	43,800 hours 5.00 years	600 hours 25 days	43,800 hours 5.00 years	43,800 hours 5.00 years	600 hours 25 days
		30%						
		50%						
		70%						
		100%						
Q04UD(E)HCPU	1	0%	43,800 hours 5.00 years	43,800 hours 5.00 years	600 hours 25 days	43,800 hours 5.00 years	43,800 hours 5.00 years	600 hours 25 days
		30%						
		50%						
		70%						
		100%						
	2	0%	12,422 hours 1.42 years	43,800 hours 5.00 years	600 hours 25 days	11,700 hours 1.34 years	43,800 hours 5.00 years	600 hours 25 days
		30%	17,745 hours 2.03 years			16,700 hours 1.91 years		
		50%	24,844 hours 2.84 years			23,400 hours 2.67 years		
		70%	41,406 hours 4.73 years			39,000 hours 4.45 years		
		100%	43,800 hours 5.00 years			43,800 hours 5.00 years		

CPU module	Battery consumption[*1]	Power-on time ratio[*2]	Battery life					
			Q7BATN			Q7BAT		
			Guaranteed value[*3]	Actual service value (Reference value)[*4]	After SM52 turned on (Backup power time after an alarm[*5])	Guaranteed value[*3]	Actual service value (Reference value)[*4]	After SM52 turned on (Backup power time after an alarm[*5])
Q06UD(E)HCPU	1	0%	43,800 hours 5.00 years	43,800 hours 5.00 years	600 hours 25 days	43,800 hours 5.00 years	43,800 hours 5.00 years	600 hours 25 days
		30%						
		50%						
		70%						
		100%						
	2	0%	12,231 hours 1.40 years	43,800 hours 5.00 years	600 hours 25 days	11,400 hours 1.30 years	43,800 hours 5.00 years	600 hours 25 days
		30%	17,473 hours 1.99 years			16,200 hours 1.85 years		
		50%	24,462 hours 2.79 years			22,800 hours 2.60 years		
		70%	40,770 hours 4.65 years			38,000 hours 4.34 years		
		100%	43,800 hours 5.00 years			43,800 hours 5.00 years		
	3	0%	6,560 hours 0.75 years	43,800 hours 5.00 years	600 hours 25 days	5,000 hours 0.57 years	43,800 hours 5.00 years	600 hours 25 days
		30%	9,731 hours 1.07 years			7,100 hours 0.81 years		
		50%	13,119 hours 1.50 years			10,000 hours 1.14 years		
		70%	21,866 hours 2.50 years			16,600 hours 1.89 years		
		100%	43,800 hours 5.00 years			43,800 hours 5.00 years		

CPU module	Battery consumption[*1]	Power-on time ratio[*2]	Battery life					
			Q7BATN			Q7BAT		
			Guaranteed value[*3]	Actual service value (Reference value)[*4]	After SM52 turned on (Backup power time after an alarm[*5])	Guaranteed value[*3]	Actual service value (Reference value)[*4]	After SM52 turned on (Backup power time after an alarm[*5])
Q10UD(E)HCPU Q13UD(E)HCPU Q20UD(E)HCPU Q26UD(E)HCPU	1	0%	43,800 hours 5.00 years	43,800 hours 5.00 years	600 hours 25 days	43,800 hours 5.00 years	43,800 hours 5.00 years	600 hours 25 days
		30%						
		50%						
		70%						
		100%						
	2	0%	11,423 hours 1.30 years	43,800 hours 5.00 years	600 hours 25 days	11,100 hours 1.27 years	43,800 hours 5.00 years	600 hours 25 days
		30%	16,318 hours 1.86 years			15,800 hours 1.80 years		
		50%	22,845 hours 2.61 years			22,200 hours 2.53 years		
		70%	38,075 hours 4.35 years			37,000 hours 4.22 years		
		100%	43,800 hours 5.00 years			43,800 hours 5.00 years		
	3	0%	6,361 hours 0.73 years	43,800 hours 5.00 years	600 hours 25 days	5,000 hours 0.57 years	43,800 hours 5.00 years	600 hours 25 days
		30%	9,086 hours 1.04 years			7,100 hours 0.81 years		
		50%	12,721 hours 1.45 years			10,000 hours 1.14 years		
		70%	21,202 hours 2.42 years			16,600 hours 1.89 years		
		100%	43,800 hours 5.00 years			43,800 hours 5.00 years		
	4	0%	4,421 hours 0.50 years	43,800 hours 5.00 years	480 hours 20 days	3,700 hours 0.42 years	36,100 hours 4.12 years	432 hours 18 days
		30%	6,316 hours 0.72 years			5,200 hours 0.59 years	43,800 hours 5.00 years	
		50%	8,843 hours 1.01 years			7,400 hours 0.84 years		
		70%	14,738 hours 1.68 years			12,300 hours 1.40 years		
		100%	43,800 hours 5.00 years			43,800 hours 5.00 years		

CPU module	Battery consumption[*1]	Power-on time ratio[*2]	Battery life					
			Q7BATN			Q7BAT		
			Guaranteed value[*3]	Actual service value (Reference value)[*4]	After SM52 turned on (Backup power time after an alarm[*5])	Guaranteed value[*3]	Actual service value (Reference value)[*4]	After SM52 turned on (Backup power time after an alarm[*5])
Q50UDEHCPU Q100UDEHCPU	1	0%	43,800 hours 5.00 years	43,800 hours 5.00 years	600 hours 25 days	43,800 hours 5.00 years	43,800 hours 5.00 years	600 hours 25 days
		30%						
		50%						
		70%						
		100%						
	2	0%	11,658 hours 1.33 years	43,800 hours 5.00 years	600 hours 25 days	10,900 hours 1.24 years	43,800 hours 5.00 years	600 hours 25 days
		30%	16,654 hours 1.90 years			15,500 hours 1.76 years		
		50%	23,315 hours 2.66 years			21,800 hours 2.48 years		
		70%	38,859 hours 4.44 years			36,300 hours 4.14 years		
		100%	43,800 hours 5.00 years			43,800 hours 5.00 years		
	3	0%	6,431 hours 0.73 years	43,800 hours 5.00 years	600 hours 25 days	4,900 hours 0.55 years	43,800 hours 5.00 years	600 hours 25 days
		30%	9,187 hours 1.05 years			7,000 hours 0.79 years		
		50%	12,861 hours 1.47 years			9,800 hours 1.11 years		
		70%	21,435 hours 2.45 years			16,300 hours 1.86 years		
		100%	43,800 hours 5.00 years			43,800 hours 5.00 years		
	4	0%	4,392 hours 0.50 years	41,219 hours 4.71 years	480 hours 20 days	3,600 hours 0.41 years	35,200 hours 4.01 years	432 hours 18 days
		30%	6,274 hours 0.72 years	43,800 hours 5.00 years		5,100 hours 0.58 years	43,800 hours 5.00 years	
		50%	8,783 hours 1.00 years			7,200 hours 0.82 years		
		70%	14,639 hours 1.67 years			12,000 hours 1.36 years		
		100%	43,800 hours 5.00 years			43,800 hours 5.00 years		
	5	0%	3,322 hours 0.38 years	33,914 hours 3.87 years	480 hours 20 days	2,700 hours 0.30 years	28,600 hours 3.26 years	336 hours 14 days
		30%	4,746 hours 0.54 years	43,800 hours 5.00 years		3,800 hours 0.43 years	40,800 hours 4.65 years	
		50%	6,645 hours 0.76 years			5,400 hours 0.61 years		
		70%	11,074 hours 1.26 years			9,000 hours 1.02 years		
		100%	43,800 hours 5.00 years			43,800 hours 5.00 years		

(c) Q8BAT

CPU module	Battery consumption[*1]	Power-on time ratio[*2]	Battery life		
			Q8BAT		
			Guaranteed value[*3]	Actual service value (Reference value)[*4]	After SM52 turned on (Backup power time after an alarm[*5])
Q00U(J)CPU Q01UCPU Q02UCPU Q03UD(E)CPU	1	0%	43,800 hours 5.00 years	43,800 hours 5.00 years	600 hours 25 days
		30%			
		50%			
		70%			
		100%			
	2	0%	43,800 hours 5.00 years	43,800 hours 5.00 years	600 hours 25 days
		30%			
		50%			
		70%			
		100%			
Q04UD(E)HCPU	1	0%	43,800 hours 5.00 years	43,800 hours 5.00 years	600 hours 25 days
		30%			
		50%			
		70%			
		100%			
	2	0%	38,800 hours 4.43 years	43,800 hours 5.00 years	600 hours 25 days
		30%	43,800 hours 5.00 years		
		50%			
		70%			
		100%			
Q06UD(E)HCPU	1	0%	43,800 hours 5.00 years	43,800 hours 5.00 years	600 hours 25 days
		30%			
		50%			
		70%			
		100%			
	2	0%	37,900 hours 4.33 years	43,800 hours 5.00 years	600 hours 25 days
		30%	43,800 hours 5.00 years		
		50%			
		70%			
		100%			
	3	0%	20,500 hours 2.34 years	43,800 hours 5.00 years	600 hours 25 days
		30%	29,200 hours 3.33 years		
		50%	41,000 hours 4.68 years		
		70%	43,800 hours 5.00 years		
		100%			

CPU module	Battery consumption[*1]	Power-on time ratio[*2]	Battery life		
			Q8BAT		
			Guaranteed value[*3]	Actual service value (Reference value)[*4]	After SM52 turned on (Backup power time after an alarm[*5])
Q10UD(E)HCPU Q13UD(E)HCPU Q20UD(E)HCPU Q26UD(E)HCPU	1	0%	43,800 hours 5.00 years	43,800 hours 5.00 years	600 hours 25 days
		30%			
		50%			
		70%			
		100%			
	2	0%	37,000 hours 4.22 years	43,800 hours 5.00 years	600 hours 25 days
		30%	43,800 hours 5.00 years		
		50%			
		70%			
		100%			
	3	0%	20,200 hours 2.31 years	43,800 hours 5.00 years	600 hours 25 days
		30%	28,800 hours 3.29 years		
		50%	40,400 hours 4.61 years		
		70%	43,800 hours 5.00 years		
		100%			
	4	0%	14,000 hours 1.60 years	43,800 hours 5.00 years	600 hours 25 days
		30%	20,000 hours 2.28 years		
		50%	28,000 hours 3.20 years		
		70%	43,800 hours 5.00 years		
		100%			

CPU module	Battery consumption[*1]	Power-on time ratio[*2]	Battery life		
			Q8BAT		
			Guaranteed value[*3]	Actual service value (Reference value)[*4]	After SM52 turned on (Backup power time after an alarm[*5])
Q50UDEHCPU Q100UDEHCPU	1	0%	43,800 hours 5.00 years	43,800 hours 5.00 years	600 hours 25 days
		30%			
		50%			
		70%			
		100%			
	2	0%	36,200 hours 4.13 years	43,800 hours 5.00 years	600 hours 25 days
		30%	43,800 hours 5.00 years		
		50%			
		70%			
		100%			
	3	0%	20,000 hours 2.28 years	43,800 hours 5.00 years	600 hours 25 days
		30%	28,500 hours 3.25 years		
		50%	40,000 hours 4.56 years		
		70%	43,800 hours 5.00 years		
		100%			
	4	0%	13,900 hours 1.58 years	43,800 hours 5.00 years	600 hours 25 days
		30%	19,800 hours 2.26 years		
		50%	27,800 hours 3.17 years		
		70%	43,800 hours 5.00 years		
		100%			
	5	0%	10,400 hours 1.18 years	43,800 hours 5.00 years	600 hours 25 days
		30%	14,800 hours 1.68 years		
		50%	20,800 hours 2.37 years		
		70%	34,600 hours 3.94 years		
		100%	43,800 hours 5.00 years		

*1 For the battery consumption, refer to ☞ Page 620, Appendix 4.

*2 The power-on time ratio indicates the ratio of programmable controller power-on time to one day (24 hours).
(When the total power-on time is 12 hours and the total power-off time is 12 hours, the power-on time ratio is 50%.)

*3 The guaranteed value represents a battery life at 70°C, which is calculated based on the characteristic values of manufacturer-supplied memory (SRAM) and on the assumption of storage ambient temperature range of -25 to 75°C (operating ambient temperature of 0 to 55°C).

*4 The actual service value (reference value) represents a battery life that is calculated based on the values measured at storage ambient temperature of 40°C. This value is intended for reference only, as it varies with characteristics of the memory.

*5 In the following status, the backup time after power off is 3 minutes.
- The battery connector is disconnected.
- The lead wire of the battery is broken.

Point

- Use the battery within the time shown by the guaranteed value of the battery life.
- If the battery may be used exceeding the time shown by the guaranteed battery life value, perform the following.
  - Perform boot operation to protect a program even if the battery dies at the programmable controller power-off.
  - Back up programs and data After SM52 turned on (within the backup power time after an alarm).
- When the battery is not connected to the CPU module, its service life is five years.
- When the battery-low special relay SM52 turned on, immediately change the battery.
  Even if an alarm has not yet occurred, it is recommended to replace the battery periodically according to the operating condition.

(4) Battery lives of the Universal model QCPU (QnUDVCPU and QnUDPVCPU)

(a) Q6BAT

The battery life differs depending on the use of an extended SRAM cassette and the power-on time ratio.

CPU module	Extended SRAM cassette	Power-on time ratio[*1]	Battery life		
			Q6BAT		
			Guaranteed value[*2]	Actual service value (Reference value)[*3]	After SM52 turned on (Backup power time after an alarm[*4])
Q03UDVCPU	Unused	0%	41,400 hours 4.72 years	43,800 hours 5.00 years	600 hours 25 days
		30%	43,800 hours 5.00 years		
		50%			
		70%			
		100%			
	Q4MCA-1MBS	0%	26,600 hours 3.03 years	43,800 hours 5.00 years	600 hours 25 days
		30%	38,000 hours 4.33 years		
		50%	43,800 hours 5.00 years		
		70%			
		100%			
	Q4MCA-2MBS	0%	23,100 hours 2.63 years	43,800 hours 5.00 years	600 hours 25 days
		30%	33,000 hours 3.76 years		
		50%	43,800 hours 5.00 years		
		70%			
		100%			
	Q4MCA-4MBS	0%	17,400 hours 1.98 years	43,800 hours 5.00 years	600 hours 25 days
		30%	24,800 hours 2.83 years		
		50%	34,800 hours 3.97 years		
		70%	43,800 hours 5.00 years		
		100%			
	Q4MCA-8MBS	0%	11,000 hours 1.25 years	43,800 hours 5.00 years	600 hours 25 days
		30%	15,700 hours 1.79 years		
		50%	22,000 hours 2.51 years		
		70%	36,600 hours 4.17 years		
		100%	43,800 hours 5.00 years		

CPU module	Extended SRAM cassette	Power-on time ratio[*1]	Battery life		
			Q6BAT		
			Guaranteed value[*2]	Actual service value (Reference value)[*3]	After SM52 turned on (Backup power time after an alarm[*4])
Q04UDVCPU Q04UDPVCPU	Not used	0%	31,700 hours 3.61 years	43,800 hours 5.00 years	600 hours 25 days
		30%	43,800 hours 5.00 years		
		50%			
		70%			
		100%			
	Q4MCA-1MBS	0%	22,000 hours 2.51 years	43,800 hours 5.00 years	600 hours 25 days
		30%	31,400 hours 3.58 years		
		50%	43,800 hours 5.00 years		
		70%			
		100%			
	Q4MCA-2MBS	0%	19,600 hours 2.23 years	43,800 hours 5.00 years	600 hours 25 days
		30%	28,000 hours 3.19 years		
		50%	39,200 hours 4.47 years		
		70%	43,800 hours 5.00 years		
		100%			
	Q4MCA-4MBS	0%	15,300 hours 1.74 years	43,800 hours 5.00 years	600 hours 25 days
		30%	21,800 hours 2.48 years		
		50%	30,600 hours 3.49 years		
		70%	43,800 hours 5.00 years		
		100%			
	Q4MCA-8MBS	0%	10,100 hours 1.15 years	43,800 hours 5.00 years	600 hours 25 days
		30%	14,400 hours 1.64 years		
		50%	20,200 hours 2.30 years		
		70%	33,600 hours 3.83 years		
		100%	43,800 hours 5.00 years		

CPU module	Extended SRAM cassette	Power-on time ratio[*1]	Battery life		
			Q6BAT		
			Guaranteed value[*2]	Actual service value (Reference value)[*3]	After SM52 turned on (Backup power time after an alarm[*4])
Q06UDVCPU Q06UDPVCPU Q13UDVCPU Q13UDPVCPU Q26UDVCPU Q26UDPVCPU	Not used	0%	30,600 hours 3.49 years	43,800 hours 5.00 years	600 hours 25 days
		30%	43,700 hours 4.98 years		
		50%	43,800 hours 5.00 years		
		70%			
		100%			
	Q4MCA-1MBS	0%	21,500 hours 2.45 years	43,800 hours 5.00 years	600 hours 25 days
		30%	30,700 hours 3.50 years		
		50%	43,000 hours 4.90 years		
		70%	43,800 hours 5.00 years		
		100%			
	Q4MCA-2MBS	0%	19,100 hours 2.18 years	43,800 hours 5.00 years	600 hours 25 days
		30%	27,200 hours 3.10 years		
		50%	38,200 hours 4.36 years		
		70%	43,800 hours 5.00 years		
		100%			
	Q4MCA-4MBS	0%	15,000 hours 1.71 years	43,800 hours 5.00 years	600 hours 25 days
		30%	21,400 hours 2.44 years		
		50%	30,000 hours 3.42 years		
		70%	43,800 hours 5.00 years		
		100%			
	Q4MCA-8MBS	0%	10,000 hours 1.14 years	43,800 hours 5.00 years	600 hours 25 days
		30%	14,200 hours 1.62 years		
		50%	20,000 hours 2.28 years		
		70%	33,300 hours 3.80 years		
		100%	43,800 hours 5.00 years		

(b) Q7BATN/Q7BAT

CPU module	Extended SRAM cassette	Power-on time ratio*1	Battery life					
			Q7BATN			Q7BAT		
			Guaranteed value*2	Actual service value (Reference value)*3	After SM52 turned on (Backup power time after an alarm*4)	Guaranteed value*2	Actual service value (Reference value)*3	After SM52 turned on (Backup power time after an alarm*4)
Q03UDVCPU	Not used	0%	43,800 hours 5.00 years	43,800 hours 5.00 years	600 hours 25 days	43,800 hours 5.00 years	43,800 hours 5.00 years	600 hours 25 days
		30%						
		50%						
		70%						
		100%						
	Q4MCA-1MBS	0%	43,800 hours 5.00 years	43,800 hours 5.00 years	600 hours 25 days	43,800 hours 5.00 years	43,800 hours 5.00 years	600 hours 25 days
		30%						
		50%						
		70%						
		100%						
	Q4MCA-2MBS	0%	43,800 hours 5.00 years	43,800 hours 5.00 years	600 hours 25 days	43,800 hours 5.00 years	43,800 hours 5.00 years	600 hours 25 days
		30%						
		50%						
		70%						
		100%						
	Q4MCA-4MBS	0%	43,800 hours 5.00 years	43,800 hours 5.00 years	600 hours 25 days	43,800 hours 5.00 years	43,800 hours 5.00 years	600 hours 25 days
		30%						
		50%						
		70%						
		100%						
	Q4MCA-8MBS	0%	33,289 hours 3.80 years	43,800 hours 5.00 years	600 hours 25 days	28,500 hours 3.25 years	43,800 hours 5.00 years	600 hours 25 days
		30%	43,800 hours 5.00 years			40,700 hours 4.64 years		
		50%				43,800 hours 5.00 years		
		70%						
		100%						

CPU module	Extended SRAM cassette	Power-on time ratio[*1]	Battery life					
			Q7BATN			Q7BAT		
			Guaranteed value[*2]	Actual service value (Reference value)[*3]	After SM52 turned on (Backup power time after an alarm[*4])	Guaranteed value[*2]	Actual service value (Reference value)[*3]	After SM52 turned on (Backup power time after an alarm[*4])
Q04UDVCPU Q04UDPVCPU	Not used	0%	43,800 hours 5.00 years	43,800 hours 5.00 years	600 hours 25 days	43,800 hours 5.00 years	43,800 hours 5.00 years	600 hours 25 days
		30%						
		50%						
		70%						
		100%						
	Q4MCA-1MBS	0%	43,800 hours 5.00 years	43,800 hours 5.00 years	600 hours 25 days	43,800 hours 5.00 years	43,800 hours 5.00 years	600 hours 25 days
		30%						
		50%						
		70%						
		100%						
	Q4MCA-2MBS	0%	43,800 hours 5.00 years	43,800 hours 5.00 years	600 hours 25 days	43,800 hours 5.00 years	43,800 hours 5.00 years	600 hours 25 days
		30%						
		50%						
		70%						
		100%						
	Q4MCA-4MBS	0%	41,649 hours 4.75 years	43,800 hours 5.00 years	600 hours 25 days	36,600 hours 4.17 years	43,800 hours 5.00 years	600 hours 25 days
		30%	43,800 hours 5.00 years			43,800 hours 5.00 years		
		50%						
		70%						
		100%						
	Q4MCA-8MBS	0%	31,720 hours 3.62 years	43,800 hours 5.00 years	600 hours 25 days	26,500 hours 3.02 years	43,800 hours 5.00 years	600 hours 25 days
		30%	43,800 hours 5.00 years			37,800 hours 4.31 years		
		50%				43,800 hours 5.00 years		
		70%						
		100%						

CPU module	Extended SRAM cassette	Power-on time ratio[*1]	Battery life					
			Q7BATN			Q7BAT		
			Guaranteed value[*2]	Actual service value (Reference value)[*3]	After SM52 turned on (Backup power time after an alarm[*4])	Guaranteed value[*2]	Actual service value (Reference value)[*3]	After SM52 turned on (Backup power time after an alarm[*4])
Q06UDVCPU Q06UDPVCPU Q13UDVCPU Q13UDPVCPU Q26UDVCPU Q26UDPVCPU	Not used	0%	43,800 hours 5.00 years	43,800 hours 5.00 years	600 hours 25 days	43,800 hours 5.00 years	43,800 hours 5.00 years	600 hours 25 days
		30%						
		50%						
		70%						
		100%						
	Q4MCA-1MBS	0%	43,800 hours 5.00 years	43,800 hours 5.00 years	600 hours 25 days	43,800 hours 5.00 years	43,800 hours 5.00 years	600 hours 25 days
		30%						
		50%						
		70%						
		100%						
	Q4MCA-2MBS	0%	43,800 hours 5.00 years	43,800 hours 5.00 years	600 hours 25 days	43,100 hours 4.92 years	43,800 hours 5.00 years	600 hours 25 days
		30%				43,800 hours 5.00 years		
		50%						
		70%						
		100%						
	Q4MCA-4MBS	0%	39,640 hours 4.53 years	43,800 hours 5.00 years	600 hours 25 days	36,200 hours 4.13 years	43,800 hours 5.00 years	600 hours 25 days
		30%	43,800 hours 5.00 years			43,800 hours 5.00 years		
		50%						
		70%						
		100%						
	Q4MCA-8MBS	0%	28,304 hours 3.23 years	43,800 hours 5.00 years	600 hours 25 dayss	24,800 hours 2.83 years	43,800 hours 5.00 years	600 hours 25 days
		30%	40,434 hours 4.62 years			35,400 hours 4.04 years		
		50%	43,800 hours 5.00 years			43,800 hours 5.00 years		
		70%						
		100%						

(c) Q8BAT

CPU module	Extended SRAM cassette	Power-on time ratio[*1]	Battery life		
			Q8BAT		
			Guaranteed value[*2]	Actual service value (Reference value)[*3]	After SM52 turned on (Backup power time after an alarm[*4])
Q03UDVCPU	Not used	0%	43,800 hours 5.00 years	43,800 hours 5.00 years	600 hours 25 days
		30%			
		50%			
		70%			
		100%			
	Q4MCA-1MBS	0%			
		30%			
		50%			
		70%			
		100%			
	Q4MCA-2MBS	0%			
		30%			
		50%			
		70%			
		100%			
	Q4MCA-4MBS	0%			
		30%			
		50%			
		70%			
		100%			
	Q4MCA-8MBS	0%			
		30%			
		50%			
		70%			
		100%			

CPU module	Extended SRAM cassette	Power-on time ratio[*1]	Battery life		
			Q8BAT		
			Guaranteed value[*2]	Actual service value (Reference value)[*3]	After SM52 turned on (Backup power time after an alarm[*4])
Q04UDVCPU Q04UDPVCPU	Not used	0%	43,800 hours 5.00 years	43,800 hours 5.00 years	600 hours 25 days
		30%			
		50%			
		70%			
		100%			
	Q4MCA-1MBS	0%			
		30%			
		50%			
		70%			
		100%			
	Q4MCA-2MBS	0%			
		30%			
		50%			
		70%			
		100%			
	Q4MCA-4MBS	0%			
		30%			
		50%			
		70%			
		100%			
	Q4MCA-8MBS	0%			
		30%			
		50%			
		70%			
		100%			

CPU module	Extended SRAM cassette	Power-on time ratio[*1]	Battery life		
			Q8BAT		
			Guaranteed value[*2]	Actual service value (Reference value)[*3]	After SM52 turned on (Backup power time after an alarm[*4])
Q06UDVCPU Q06UDPVCPU Q13UDVCPU Q13UDPVCPU Q26UDVCPU Q26UDPVCPU	Not used	0%	43,800 hours 5.00 years	43,800 hours 5.00 years	600 hours 25 days
		30%			
		50%			
		70%			
		100%			
	Q4MCA-1MBS	0%			
		30%			
		50%			
		70%			
		100%			
	Q4MCA-2MBS	0%			
		30%			
		50%			
		70%			
		100%			
	Q4MCA-4MBS	0%			
		30%			
		50%			
		70%			
		100%			
	Q4MCA-8MBS	0%			
		30%			
		50%			
		70%			
		100%			

*1 The power-on time ratio indicates the ratio of programmable controller power-on time to one day (24 hours).
(When the total power-on time is 12 hours and the total power-off time is 12 hours, the power-on time ratio is 50%.)

*2 The guaranteed value represents a battery life at 70°C, which is calculated based on the characteristic values of manufacturer-supplied memory (SRAM) and on the assumption of storage ambient temperature range of -25 to 75°C (operating ambient temperature of 0 to 55°C).

*3 The actual service value (reference value) represents a battery life that is calculated based on the values measured at storage ambient temperature of 40°C. This value is intended for reference only, as it varies with characteristics of the memory.

*4 In the following status, the backup time after power off is 3 minutes.
- The battery connector is disconnected.
- The lead wire of the battery is broken.

Point

- Use the battery within the time shown by the guaranteed value of the battery life.
- If the battery may be used exceeding the time shown by the guaranteed battery life value, perform the following.
  - Perform boot operation to protect a program even if the battery dies at the programmable controller power-off.
  - Back up programs and data After SM52 turned on (within the backup power time after an alarm).
- When the battery is not connected to the CPU module, its service life is five years.
- When the battery-low special relay SM52 turned on, immediately change the battery.
  Even if an alarm has not yet occurred, it is recommended to replace the battery periodically according to the operating condition.

Appendix 4.3 SRAM card battery life

SRAM card	Power-on time ratio[*1]	Battery life[*3]		
		Guaranteed value (MIN)	Actual service value (Reference value)[*4]	After SM52 turned on (Backup power time after an alarm)
Q2MEM-1MBS Manufacturing control number "□□A"[*2]	0%	690 hours 0.07 years	6,336 hours 0.72 years	8 hours
	100%	11,784 hours 1.34 years	13,872 hours 1.58 years	
Q2MEM-1MBS Manufacturing control number "□□B"[*2] or "□□B□"[*2] (B or later) Q2MEM-1MBSN	0%	2,400 hours 0.27 years	23,660 hours 2.7 years	20 hours
	30%	2,880 hours 0.32 years	31,540 hours 3.6 years	
	50%	4,320 hours 0.49 years	39,420 hours 4.5 years	
	70%	6,480 hours 0.73 years	43,800 hours 5.0 years	
	100%	43,800 hours 5.0 years		50 hours
Q2MEM-2MBSN Q2MEM-2MBS	0%	2,400 hours 0.27 years	23,660 hours 2.7 years	20 hours
	30%	2,880 hours 0.32 years	31,540 hours 3.6 years	
	50%	4,320 hours 0.49 years	39,420 hours 4.5 years	
	70%	6,480 hours 0.73 years	43,800 hours 5.0 years	
	100%	43,800 hours 5.0 years		50 hours
Q3MEM-4MBS	0%	43,800 hours 5.0 years	43,800 hours 5.0 years	50 hours
	30%			
	50%			
	70%			
	100%			
Q3MEM-8MBS	0%	36,300 hours 4.1 years	43,800 hours 5.0 years	50 hours
	30%	43,800 hours 5.0 years		
	50%			
	70%			
	100%			

*1 The power-on time ratio indicates the ratio of programmable controller power-on time to one day (24 hours).
(When the total power-on and power-off times are 12 hours for each, the power-on time ratio is 50%).

*2 The manufacturer control number is the third digit from the leftmost of the alphanumeric characters written on the label on the back of the SRAM card as shown below.

Written in the upper right hand corner	Written in the lower right hand corner
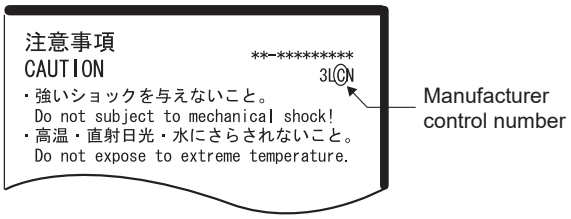	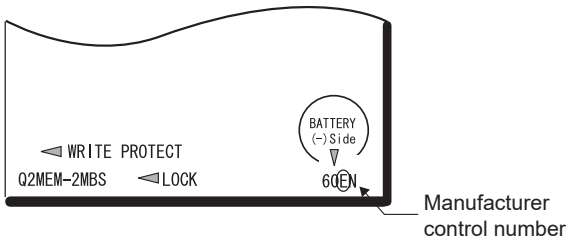

*3 For the High Performance model QCPU, these values are applicable when the serial number (first five digits) of the CPU module is "04012" or later.
For the battery life of the CPU module with a serial number (first five digits) is "04011" or earlier, refer to Page 662, Appendix 6.3.

*4 The actual service value may vary depending on ambient temperature.

Point

- Use the battery within the time shown by the guaranteed value of the battery life.
- If the battery may be used exceeding the time shown by the guaranteed battery life value, perform the following.
  - Perform boot operation to protect a program even if the battery dies at the programmable controller power-off.
  - Back up programs and data after SM52 turned on (within the backup time after an alarm).
- Note that the SRAM card battery is consumed even while the programmable controller is powered on with the CPU module battery connected.
- When the battery-low special relay SM52 turns on, immediately change the battery.
  Even if an alarm has not yet occurred, it is recommended to replace the battery periodically according to the operating condition.
- The SRAM card is not available for the Basic model QCPU.

Appendix 5 Checking Serial Number and Function Version

The serial number and function version of the CPU module can be checked on the rating plate, on the front of the module, and on the System monitor screen in programming tool.

(1) Checking on the rating plate

The rating plate is located on the side of the module.

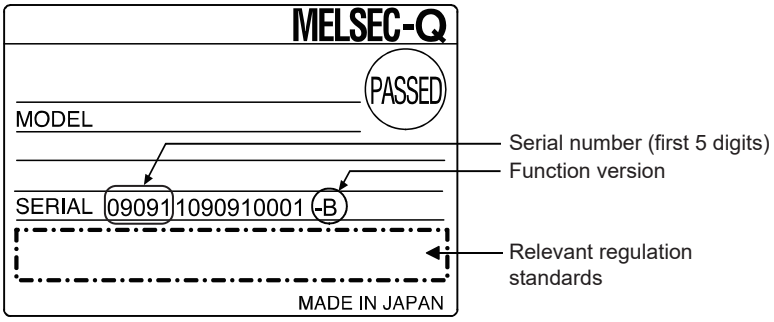

(2) Checking on the front of the module

The serial number on the rating plate is printed on the front (at the bottom) of the module.
This does not apply to the following CPU modules.

- Redundant CPUs and Q00JCPU

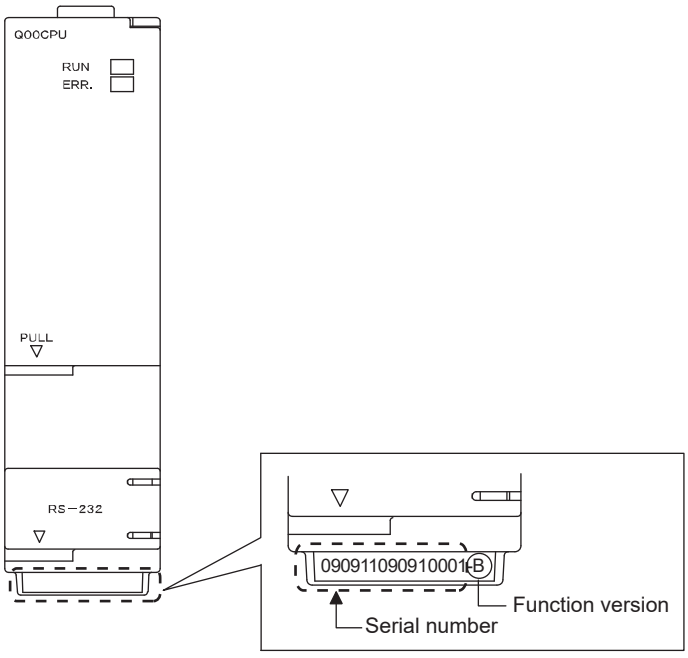

(3) Checking on the System monitor screen (Product information list screen)

The serial number and function version of intelligent function modules can also be checked on the Product Information List screen.

[Diagnostics]⇨[System Monitor]⇨[Product Information List] button

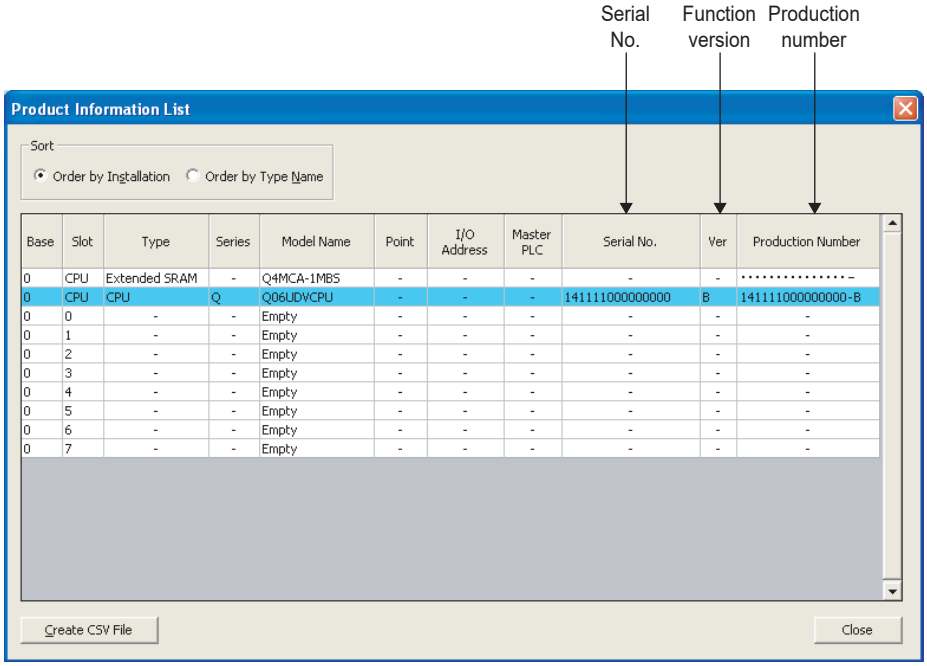

[Serial No., Ver., and Product No.]

- The serial number of the module is displayed in the "Serial No." column.
- The function version of the module is displayed in the "Ver." column.
- The serial number (product number) printed on the rating plate of the module is displayed in the "Product No." column.*1

  Note that "-" is displayed for a modules that does not support the product number display.
- Information on the extended SRAM cassette inserted is also displayed for the QnUDVCPU and QnUDPVCPU.

  Information on the memory card or SD memory card inserted to the CPU module are not displayed.

*1 The product number is displayed only for the Universal model QCPU.

Point

- The individual module product information can be displayed by selecting a module in the "Main Block" area and clicking the Error History Detail button on the System Monitor screen.

  GX Works2 Version 1 Operating Manual (Common)
- The serial number displayed on the Product Information List screen of the programming tool may differ from that on the rating plate or on the front of the module.
  - The serial number on the rating plate or on the front of the module indicates the management information of the product.
  - The serial number displayed on the Product Information List screen indicates the functional information of the product. The functional information of the product will be updated when a function is added.

Appendix 5.1 Applicable software versions

The following table lists the software versions applicable to a single CPU system. For versions applicable to a multiple CPU system or a redundant system, refer to the following.

QCPU User's Manual (Multiple CPU System)

QnPRHCPU User's Manual (Redundant System)

CPU module		Software version		
		GX Works2	GX Developer	PX Developer
Basic model QCPU		1.15R or later	7.00A or later	N/A
High Performance model QCPU			4.00A or later	
Process CPU	Q02PHCPU, Q06PHCPU	1.87R or later	8.68W or later	1.18U or later*1
	Q12PHCPU, Q25PHCPU		7.10L or later	1.00A or later*1*2
Universal model QCPU	Q00UJCPU, Q00UCPU, Q01UCPU	1.15R or later	8.76E or later	N/A
	Q02UCPU, Q03UDCPU, Q04UDHCPU, Q06UDHCPU		8.48A or later	N/A
	Q10UDHCPU, Q20UDHCPU		8.76E or later	N/A
	Q13UDHCPU, Q26UDHCPU		8.62Q or later	N/A
	Q03UDVCPU, Q04UDVCPU, Q06UDVCPU, Q13UDVCPU, Q26UDVCPU	1.98C or later	N/A	N/A
	Q04UDPVCPU, Q06UDPVCPU, Q13UDPVCPU, Q26UDPVCPU	1.492N or later	N/A	1.38Q or later
	Q03UDECPU, Q04UDEHCPU, Q06UDEHCPU, Q13UDEHCPU, Q26UDEHCPU	1.15R or later	8.68W or later	N/A
	Q10UDEHCPU, Q20UDEHCPU		8.76E or later	N/A
	Q50UDEHCPU, Q100UDEHCPU	1.31H or later	N/A	N/A

*1 To use PX Developer, use GX Works2 of Version 1.98C or later.

*2 To use PX Developer, use GX Developer of Version 7.20W or later.

Appendix 5.2 GX Configurator versions applicable to a single CPU system

The following table lists the GX Configurator versions applicable to a single CPU system.
The applicable versions differ depending on the intelligent function module used.
For the applicable versions, refer to the user's manual for the intelligent function module used.

(1) When Basic model QCPU, High Performance model QCPU, and Process QCPU are used

<table>
<tr><th rowspan="2">Product</th><th colspan="3">Software version</th></tr>
<tr><th>Basic model QCPU</th><th>High Performance model QCPU</th><th>Process CPU</th></tr>
<tr><td>GX Configurator-AD</td><td rowspan="8">Version 1.10L or later</td><td>SW0D5C-QADU 00A or later</td><td rowspan="8">Version 1.13P or later</td></tr>
<tr><td>GX Configurator-DA</td><td>SW0D5C-QDAU 00A or later</td></tr>
<tr><td>GX Configurator-SC</td><td>SW0D5C-QSCU 00A or later</td></tr>
<tr><td>GX Configurator-CT</td><td>SW0D5C-QCTU 00A or later</td></tr>
<tr><td>GX Configurator-TI</td><td>Version 1.00A or later</td></tr>
<tr><td>GX Configurator-TC</td><td>SW0D5C-QCTU 00A or later</td></tr>
<tr><td>GX Configurator-FL</td><td>SW0D5C-QFLU 00A or later</td></tr>
<tr><td>GX Configurator-QP</td><td>Version 2.10L or later</td><td>Version 2.00A or later</td><td>Version 2.13P or later</td></tr>
<tr><td>GX Configurator-PT</td><td>Version 1.10L or later</td><td>Version 1.00A or later</td><td rowspan="2">Version 1.13P or later</td></tr>
<tr><td>GX Configurator-AS</td><td>Version 1.13P or later</td><td>Version 1.13P or later</td></tr>
<tr><td>GX Configurator-MB</td><td>Version 1.00A or later</td><td rowspan="2">Version 1.00A or later</td><td>Version 1.00A or later</td></tr>
<tr><td>GX Configurator-DN</td><td>Version 1.10L or later</td><td>Version 1.13P or later</td></tr>
<tr><td>GX Configurator-DP</td><td>Version 7.00A or later</td><td>Version 7.00A or later</td><td>Version 7.00A or later*1</td></tr>
</table>

*1 When using the GX Configurator with the Q02PH/Q06PHCPU, use the Version 7.04E or later.

(2) When Universal model QCPU is used

Product	Software version			
	Q02U, Q03UD, Q04UDH, or Q06UDHCPU	Q13UDH or Q26UDHCPU	Q03UDE, Q04UDEH, Q06UDEH, Q13UDEH, or Q26UDEHCPU	Q00U(J), Q01U, Q10UDH, Q20UDH, Q10UDEH, or Q20UDEHCPU
GX Configurator-AD	Version 2.05F or later*1	Version 2.05F or later*2	Version 2.05F or later*3	Version 2.05F or later*4
GX Configurator-DA	Version 2.06G or later*1	Version 2.06G or later*2	Version 2.06G or later*3	Version 2.06G or later*4
GX Configurator-SC	Version 2.12N or later*1	Version 2.12N or later*2	Version 2.17T or later*3	Version 2.17T or later*4
GX Configurator-CT	Version 1.25AB or later*1	Version 1.25AB or later*2	Version 1.25AB or later*3	Version 1.25AB or later*4
GX Configurator-TI	Version 1.24AA or later*1	Version 1.24AA or later*2	Version 1.24AA or later*3	Version 1.24AA or later*4
GX Configurator-TC	Version 1.23Z or later*1	Version 1.23Z or later*2	Version 1.23Z or later*3	Version 1.23Z or later*4
GX Configurator-FL	Version 1.23Z or later*1	Version 1.23Z or later*2	Version 1.23Z or later*3	Version 1.23Z or later*4
GX Configurator-QP	Version 2.25B or later	Version 2.29F or later	Version 2.30G or later*5	Version 2.32J or later
GX Configurator-PT	Version 1.23Z or later*1	Version 1.23Z or later*2	Version 1.23Z or later*3	Version 1.23Z or later*4
GX Configurator-AS	Version 1.21X or later*1	Version 1.21X or later*2	Version 1.21X or later*3	Version 1.21X or later*4
GX Configurator-MB	Version 1.08J or later*1	Version 1.08J or later*2	Version 1.08J or later*3	Version 1.08J or later*4
GX Configurator-DN	Version 1.23Z or later*1	Version 1.23Z or later*2	Version 1.24AA or later*3	Version 1.24AA or later*4
GX Configurator-DP*6	Version 7.02C or later*7	Version 7.03D or later	Version 7.03D or later	Version 7.04E or late

*1 The software can be used by installing GX Developer Version 8.48A or later.
*2 The software can be used by installing GX Developer Version 8.62Q or later.
*3 The software can be used by installing GX Developer Version 8.68W or later.
*4 The software can be used by installing GX Developer Version 8.78G or later.
*5 GX Configurator-QP Version 2.29F can be used when connected via USB.
*6 When using the GX Configurator with the Q50UDEH/Q100UDEHCPU, use the Version 7.07H or later.
*7 When using the GX Configurator with the Q02UCPU, use the Version 7.03D or later.

Appendix 6 Added or Changed Functions

Functions and specifications of the CPU module are added and/or changed at each version upgrade.
Available functions and specifications differ depending on the function version and serial number of the CPU module.

Appendix 6.1 Basic model QCPU upgrade

(1) Specifications comparison

○: Usable/compatible, ×: Unusable/incompatible

Specifications		Serial number (first 5 digits) of the CPU module	
		Function version A	Function version B
		"04121" or earlier	"04122" or later
Standard RAM capacity	Q00JCPU	×	
	Q00CPU	64K bytes	128K bytes
	Q01CPU	64K bytes	128K bytes
CPU shared memory	Q00JCPU	×	
	Q00CPU	×	○
	Q01CPU	×	○

(2) Added functions and supported CPU module and programming tool versions

×: Not supported, ---: Not related to the programming tool

Function	Function version	Serial number (first 5 digits)	Programming tool version	
			GX Works2	GX Developer
Function block (Operating manual (for function block) for the programming tool used)	A	"04121" of earlier	Version 1.15R or later	Version 8.00A or later
Structured text (ST) language (MELSEC-Q/L Programming Manual (Structured Text))				
MELSAP3 (MELSEC-Q/L/QnA Programming Manual (PID Control Instructions))	B	"04122" or later		
PID operation function*1 (MELSEC-Q/L/QnA Programming Manual (PID Control Instructions))				
Real number operation*1*3				
Intelligent function module event interruption*3				
Device initial value automatic setting function*3				
Remote password setting function*3				
E-mail parameter (Manual of the module that supports the e-mail function)				
Online change using pointer*3				
Increased file register capacity (32K points to 64K points)*2*3				---
Multiple CPU system (QCPU User's Manual (Multiple CPU System))				Version 8.00A or later
Online change (multiple blocks)*3				
CC-Link Remote network additional mode (MELSEC-Q CC-Link System Master/Local Module User's Manual)		"06112" or later		Version 8.03D or later

*1 When the CPU instruction installed by GX Developer Version 8 is read by GX Developer of Version 7 or earlier, it is processed as an "instruction code error" by GX Developer.

*2 Unsupported by the Q00JCPU.

*3 For details, refer to the following.

Qn(H)/QnPH/QnPRHCPU User's Manual (Function Explanation, Program Fundamentals)

Appendix 6.2 High Performance model QCPU upgrade

(1) Specifications comparison

○: Usable/compatible, ×: Unusable/incompatible

Specifications		Serial number (first 5 digits) of the CPU module					
		Function version A		Function version B			
		"02091" or earlier	"02092" or later	"02112" or later	"03051" or later	"04012" or later	"16021" or later
Standard RAM capacity	Q02CPU	64K bytes					
	Q02HCPU	64K bytes				128K bytes	
	Q06HCPU	64K bytes				128K bytes	
	Q12HCPU	64K bytes	256K bytes				
	Q25HCPU	64K bytes	256K bytes				
CPU shared memory		×	×	○	○	○	○
SRAM card battery life extension*1		×	×	×	×	○	○
SRAM card (2M bytes)		×	×	×	×	○	○
SRAM card (4M bytes)		×	×	×	×	×	○

*1 For details of the SRAM card battery life, refer to Page 651, Appendix 4.3.

(2) Added functions and supported CPU module and programming tool versions

×: Not supported, ---: Not related to the programming tool

Function	Function version	Serial number (first 5 digits)	Programming tool version	
			GX Works2	GX Developer
Automatic write to the standard ROM*1	A	"02092" or later	Version 1.15R or later	Version 6 or later
External input/output forced on/off*1				
Remote password setting*1				
MELSECNET/H remote I/O network*1				
Interrupt module (QI60)*1				
Programming module (☞ Page 52, Section 2.3.2)			---	

Function	Function version	Serial number (first 5 digits)	Programming tool version	
			GX Works2	GX Developer
Multiple CPU system*2	B	"02122" or later	Version 1.15R or later	Version 7 or later
Installation of a PC CPU module into a multiple CPU system*2		"03051" or later		Version 7.10L or later
High speed interrupt*1		"04012" or later		Version 8 or later
Index modification for module designation of dedicated instruction (Manuals of the intelligent function modules that support the use of dedicated instructions)			---	
Selection of refresh item for COM instruction (MELSEC-Q/L Programming Manual (Common Instruction))				
Online change (files) of SFC programs*1		"04122" or later	Version 1.15R or later	Version 8 or later
File memory capacity change*1				
CC-Link Remote network additional mode (MELSEC-Q CC-Link System Master/Local Module User's Manual)		"05032" or later		Version 8.03D or later
Incomplete derivative PID operation function*3				
Floating-point comparison instruction speedup			---	
Read of the SFC active step comment (MELSEC-Q/L/QnA Programming Manual (SFC))		"07012" or later		
Error detection in the redundant power supply system*1		"07032" or later	Version 1.15R or later	Version 8.23Z or later
Use of clock data of 1/1000 second*1			---	
Storage of sampling trace files in standard RAM*1			Version 1.15R or later	Version 8.23Z or later
Individual setting of refresh device on multiple CPU system*2				
Execution status selection of the fall instruction during online change*1		"07092" or later		Version 8.27D or later
CC-Link block data assurance per station (MELSEC-Q CC-Link System Master/Local Module User's Manual)		"08032" or later		Version 8.32J or later
Setting "8" for the number of modules in Network parameter for CC-Link (MELSEC-Q CC-Link System Master/Local Module User's Manual)				
CC-Link IE Controller Network (MELSEC-Q CC-Link IE Controller Network Reference Manual)		"09012" or later		Version 8.45X or later
ATA card (Page 253, Section 9.2.1)			---	
SRAM card (4M bytes) (Page 253, Section 9.2.1)		"16021" or later		

*1 For details, refer to the following.
Qn(H)/QnPH/QnPRHCPU User's Manual (Function Explanation, Program Fundamentals)

*2 For details, refer to the following.
QCPU User's Manual (Multiple CPU System)

*3 For details, refer to the following.
MELSEC-Q/L/QnA Programming Manual (PID Control Instructions)

Appendix 6.3 Precautions for using older versions of the High Performance model QCPU

(1) Battery lives when the serial number (first five digits) of the QCPU is "05010" or earlier

(a) Q6BAT

CPU module model	Power-on time ratio	Battery life		
		Q6BAT		
		Guaranteed value (70°C)	Actual service value (Reference value) (40°C)	After SM52 turned on (Backup power time after an alarm)
Q02CPU	0%	5,433 hours 0.62 years	43,800 hours 5.00 years	120 hours 5 days
	30%	7,761 hours. 0.88 years		
	50%	10,866 hours 1.24 years		
	70%	18,110 hours 2.06 years		
	100%	43,800 hours 5.00 years		
Q02HCPU Q06HCPU	0%	2,341 hours 0.26 years	14,550 hours 1.66 years	120 hours 5 days
	30%	3,344 hours 0.38 years	20,786 hours 2.37 years	
	50%	4,682 hours 0.53 years	29,100 hours 3.32 years	
	70%	7,803 hours 0.89 years	43,800 hours 5.00 years	
	100%	43,800 hours 5.00 years		
Q12HCPU Q25HCPU	0%	1,260 hours 0.14 years	6,096 hours 0.69 years	48 hours 2 days
	30%	1,800 hours 0.20 years	8,709 hours 0.99 years	
	50%	2,520 hours 0.28 years	12,192 hours 1.39 years	
	70%	4,200 hours 0.47 years	20,320 hours 2.31 years	
	100%	43,800 hours 5.00 years	43,800 hours 5.00 years	

(b) Q7BATN/Q7BAT

CPU module model	Power-on time ratio	Battery life					
		Q7BATN			Q7BAT		
		Guaranteed value (70°C)	Actual service value (Reference value) (40°C)	After SM52 turned on (Backup power time after an alarm)	Guaranteed value (70°C)	Actual service value (Reference value) (40°C)	After SM52 turned on (Backup power time after an alarm)
Q02CPU	0%	27,773 hours 3.17 years	43,800 hours 5.00 years	480 hours 20 days	13,000 hours 1.48 years	43,800 hours 5.00 years	240 hours 10 days
	30%	39,676 hours 4.53 years			18,571 hours 2.11 years		
	50%	43,800 hours 5.00 years			26,000 hours 2.96 years		
	70%				43,333 hours 4.94 years		
	100%				43,800 hours 5.00 years		
Q02HCPU Q06HCPU	0%	9,793 hours 1.12 years	43,800 hours 5.00 years	480 hours 20 days	5,000 hours 0.57 years	38,881 hours 4.43 years	240 hours 10 days
	30%	13,990 hours 1.60 years			7,142 hours 0.81 years	43,800 hours 5.00 years	
	50%	19,586 hours 2.24 years			10,000 hours 1.14 years		
	70%	32,643 hours 3.73 years			16,666 hours 1.90 years		
	100%	43,800 hours 5.00 years			43,800 hours 5.00 years		
Q12HCPU Q25HCPU	0%	4,407 hours 0.50 years	17,718 hours 2.02 years	480 hours 20 days	2,900 hours 0.33 years	16,711 hours 1.90 years	96 hours 4 days
	30%	6,296 hours 0.72 years	25,312 hours 2.89 years		4,142 hours 0.47 years	23,873 hours 2.72 years	
	50%	8,815 hours 1.01 years	35,436 hours 4.05 years		5,800 hours 0.66 years	33,422 hours 3.81 years	
	70%	14,691 hours 1.68 years	43,800 hours 5.00 years		9,666 hours 1.10 years	43,800 hours 5.00 years	
	100%	43,800 hours 5.00 years			43,800 hours 5.00 years		

(c) Q8BAT

CPU module model	Power-on time ratio	Battery life		
		Q8BAT		
		Guaranteed value (70°C)	Actual service value (Reference value) (40°C)	After SM52 turned on (Backup power time after an alarm)
Q02CPU	0%	43,800 hours 5.00 years	43,800 hours 5.00 years	600 hours 25 days
	30%			
	50%			
	70%			
	100%			
Q02HCPU Q06HCPU	0%	20,498 hours 2.34 years	43,800 hours 5.00 years	600 hours 25 days
	30%	29,959 hours 3.42 years		
	50%	41,785 hours 4.77 years		
	70%	43,800 hours 5.00 years		
	100%			
Q12HCPU Q25HCPU	0%	11,038 hours 1.26 years	43,800 hours 5.00 years	240 hours 10 days
	30%	16,200 hours 1.80 years		
	50%	22,075 hours 2.52 years		
	70%	37,055 hours 4.23 years		
	100%	43,800 hours 5.00 years		

(2) SRAM card battery lives when the serial number (first five digits) of the QCPU is "04011" or earlier

SRAM card	Power-on time ratio	Battery life		
		Guaranteed value (MIN)	Actual service value (Reference Value)	After SM52 turned on (Backup power time after an alarm)
Q2MEM-1MBSN, Q2MEM-1MBS, Q2MEM-2MBSN, Q2MEM-2MBS	0%	690 hours 0.07 years	6,336 hours 0.72 years	8 hours
	100%	11,784 hours 1.34 years	13,872 hours 1.58 years	

(3) Number of file register points according to the serial number (first five digits)

CPU module model name		Number of file register points
Q02CPU		32K points
Q02HCPU Q06HCPU	Serial number (first five digits) is "04011" or earlier	32K points
	Serial number (first five digits) is "04012" or later	64K points
Q12HCPU Q25HCPU	Serial number (first five digits) is "02091" or earlier	32K points
	Serial number (first five digits) is "02092" or later	128K points

Appendix 6.4 Process CPU upgrade

(1) Added functions and supported CPU module and GX Developer versions

×: Not supported, ---: Not related to the programming tool

<table>
<tr><th rowspan="2">Function</th><th rowspan="2">Function version</th><th rowspan="2">Serial number (first 5 digits)</th><th colspan="2">Programming tool version</th></tr>
<tr><th>GX Works 2</th><th>GX Developer</th></tr>
<tr><td>Index modification for module designation of the dedicated instruction (Manuals of the intelligent function modules that support the use of dedicated instructions)</td><td rowspan="15">C</td><td rowspan="10">"07032" or later</td><td colspan="2" rowspan="2">---</td></tr>
<tr><td>Selection of refresh item for the COM instruction (MELSEC-Q/L Programming Manual (Common Instruction))</td></tr>
<tr><td>Online change (files) of SFC programs*1</td><td rowspan="3">Version 1.87R or later</td><td rowspan="2">Version 8 (Version 8.22Y or earlier)</td></tr>
<tr><td>File memory capacity change*1</td></tr>
<tr><td>CC-Link remote network additional mode (MELSEC-Q CC-Link System Master/Local Module User's Manual)</td></tr>
<tr><td>Program memory check function*1</td><td>Version 8.23Z or later</td></tr>
<tr><td>Read of the SFC active step comment (MELSEC-Q/L/QnA Programming Manual (SFC))</td><td colspan="2">---</td></tr>
<tr><td>Error detection in the redundant power supply system*1</td><td>Version 1.87R or later</td><td>Version 8.23Z or later</td></tr>
<tr><td>Use of clock data of 1/1000 second*1</td><td colspan="2">---</td></tr>
<tr><td>Storage of sampling trace files in standard RAM*1</td><td rowspan="5">Version 1.87R or later</td><td rowspan="2">Version 8.23Z or later</td></tr>
<tr><td>Individual setting of refresh device on multiple CPU system (QCPU User's Manual (Multiple CPU System))</td></tr>
<tr><td>Execution status selection of the fall instruction during online change*1</td><td>"07092" or later</td><td>Version 8.27D or later</td></tr>
<tr><td>CC-Link block data assurance per station (MELSEC-Q CC-Link System Master/Local Module User's Manual)</td><td rowspan="2">"08032" or later</td><td rowspan="2">Version 8.32J or later</td></tr>
<tr><td>Setting "8" for the number of modules in Network parameter for CC-Link (MELSEC-Q CC-Link System Master/Local Module User's Manual)</td></tr>
<tr><td>CC-Link IE Controller Network (MELSEC-Q CC-Link IE Controller Network Reference Manual)</td><td>"10042" or later</td><td>Version 8.68W or later</td></tr>
<tr><td>SRAM card (4M bytes) (Page 253, Section 9.2.1)</td><td>"16021" or later</td><td colspan="2">---</td></tr>
</table>

*1 For details, refer to the following.

Qn(H)/QnPH/QnPRHCPU User's Manual (Function Explanation, Program Fundamentals)

Appendix 6.5 Redundant CPU upgrade

(1) Added functions and supported CPU module and GX Developer versions

×: Not supported, ---: Not related to the programming tool

Function	Function version	Serial number (first 5 digits)	Programming tool version	
			GX Works 2	GX Developer
Read of the SFC active step comment (MELSEC-Q/L/QnA Programming Manual (SFC))	D	"07032" or later	---	
Use of clock data of 1/1000 second*1				
Storage of sampling trace files in standard RAM*1			Version 1.87R or later	Version 8.23Z or later
Execution status selection of the fall instruction during online change*1		"07092" or later		Version 8.27D or later
Extension base unit (Q6□WRB) (QnPRHCPU User's Manual (Redundant System))		"09012" or later		Version 8.45X or later
Setting 8 for the number of modules in Network parameter for CC-Link (MELSEC-Q CC-Link System Master/Local Module User's Manual)		"09012" or later		Version 8.58L or later
CC-Link IE Controller Network (MELSEC-Q CC-Link IE Controller Network Reference Manual)		"10042" or later		Version 8.68W or later
SRAM card (4M bytes) (Page 253, Section 9.2.1)		"16021" or later	---	

*1 For details, refer to the following.

Qn(H)/QnPH/QnPRHCPU User's Manual (Function Explanation, Program Fundamentals)

Appendix 6.6 Universal model QCPU upgrade

(1) Added functions and supported CPU module and programming tool

×: Not supported, ---: Not related to the programming tool

Function	Function version	Serial number (first 5 digits)	Programming tool version	
			GX Works2	GX Developer
Use of the PC CPU module[*2] (QCPU User's Manual (Multiple CPU System))	B	"09072" or later	Version 1.15R or later	---
Setting whether to use the local devices per program[*1]		*8		Version 8.62Q or later
Program memory batch transfer execution status check (SM165)[*1]				---
Multiple CPU high-speed transmission dedicated instruction[*2] (MELSEC-Q/L Programming Manual (Common Instruction))				
Battery consumption display[*2] (Page 621, Appendix 4.1)				
Bit device extension[*1]		"10042" or later		Version 8.68W or later
Executional conditioned device test[*1]				
Sampling trace auto start function[*1*2]				
CC-Link IE group cyclic communication function (CC-Link IE Controller Network Reference Manual)				
Scan time measurement[*1]				
External input/output forced on/off[*1]				
Monitoring condition setting[*1*2]			Version 1.73B or later	
Redundant power supply system[*1*2]			Version 1.15R or later	
32-bit indexing with "ZZ" specification (MELSEC-Q/L Programming Manual (Common Instruction))				
Extended data register (D) and extended link register (W)[*1*2]		"09042" or later[*3]		Version 8.70Y or later
Serial communication function (Q02UCPU)[*1]		"10102" or later		Version 8.76E or later
CPU module change function with memory card[*1*2]				
Local device setting of the index register[*1*2]				
Communication using the A-compatible 1C/1E frame (MC protocol)[*4*5] (MELSEC Communication Protocol Reference Manual)				
A → QnA converted special relay/special register (SM1000 to SM1255, SD1000 to SD1255) (Page 478, Appendix 2, Page 527, Appendix 3)				
Socket communication function[*2] (QnUCPU User's Manual (Communication via Built-in Ethernet Port))		"11012" or later		Version 8.78G or later
Module model name read[*1]		"11043" or later		Version 8.82L or later
Module error collection function[*1*2*6]		"11043" or later	Version 1.12N or later	×

Function	Function version	Serial number (first 5 digits)	Programming tool version	
			GX Works2	GX Developer
IP address change function (QnUCPU User's Manual (Communication via Built-in Ethernet Port))*1	B	"11082" or later	---	---
Local device batch read function*1		"12012" or later	Version 1.31H or later	×
CC-Link IE Field Network (MELSEC-Q CC-Link IE Field Network Master/Local Module User's Manual)				
Send points expansion function (CC-Link IE Controller Network module)*1*6		"12052" or later	Version 1.40S or later	×
Online change of inactive blocks (SFC) (MELSEC-Q/L/QnA Programming Manual (SFC))*2				
Expansion of SFC step relay points*1*2				
Operation mode setting at SFC double block START (MELSEC-Q/L/QnA Programming Manual (SFC))*2				
SFC comment readout instruction (MELSEC-Q/L/QnA Programming Manual (SFC))*2			---	
Data up to 10238 bytes can be exchanged with the SP.SOCSND/S(P).SOCRCV(S)/S(P).SOCRDATA instructions (QnUCPU User's Manual (Communication via Built-in Ethernet Port))*2				
Parameter-valid drive information*1		---	Version 1.40S or later	×
Program cache memory auto recovery function*1		"12122" or later	---	---
Extension of available index register range (Z0 to Z19) when Jn and Un are used in the dedicated instruction (Manuals for the network modules and the intelligent function modules used)		"13022" or later		
Storage of device memory error information (Memory check function) (Page 575, Appendix 3 (9))				
Storage of program error location (Memory check function) (Page 528, Appendix 3 (1))		"13042" or later		
Serial communication function (Q03UD/Q04UDH/Q06UDH/Q10UDH/Q13UDH/Q20UDH/Q26UDHCPU)*1		"13062" or later	Version 1.62Q or later	×
SFC control target block switching (MELSEC-Q/L/QnA Programming Manual (SFC))		"13102" or later	Version 1.73B or later	×
AnS/A series compatible extension base unit			---	---
Communication using the A-compatible 1E frame (MC protocol) through built-in Ethernet port (MELSEC Communication Protocol Reference Manual)				
IP packet transfer function (for CC-Link IE Field Network) (QnUCPU User's Manual (Communication via Built-in Ethernet Port))*2*6		"14022" or later	Version 1.77F or later	×
Own station number setting function for CC-Link IE Field Network (MELSEC-Q CC-Link IE Field Network Master/Local Module User's Manual)		"14042" or later	Version 1.87R or later	×

Function	Function version	Serial number (first 5 digits)	Programming tool version	
			GX Works2	GX Developer
Writing/reading data to/from refresh devices by specifying a station number*2 (MELSEC-Q/L Programming Manual (Common Instruction))	B	*12	---	---
High-speed interrupt function*1*7		---	Version 1.98C or later	×
Data logging function*7 (QnUDVCPU/LCPU User's Manual (Data Logging Function))		---	Version 1.98C or later	×
IP packet transfer function (for CC-Link IE Controller Network) (QnUCPU User's Manual (Communication via Built-in Ethernet Port))*2*6		"14022" or later	Version 1.98C or later	×
Use of file registers in communication using the A-compatible 1E frame (MC protocol) through built-in Ethernet port (QnUCPU User's Manual (Communication via Built-in Ethernet Port))		*9	---	---
Increase in the number of routing parameters (MELSEC-Q/L Programming Manual (Common Instruction))*2		*10		
Latch clear by using the special relay and special register areas*1*2		*11		
Predefined protocol function		"15103" or later	1.501X or later	×
Reading/writing device data from/to the CPU module on another station by specifying an IP address (QnUCPU User's Manual (Communication via Built-in Ethernet Port))		"16043" or later	1.513K or later	---
iQ Sensor Solution function (data backup/restoration only) for AnyWireASLINK and CC-Link (iQ Sensor Solution Reference Manual)*2		"17012" or later	1.530C or later	---
iQ Sensor Solution function (data backup/restoration only) for CC-Link IE Field Network (iQ Sensor Solution Reference Manual)*2		"17052" or later	×	---
MELSOFT connection extended setting (QnUCPU User's Manual (Communication via Built-in Ethernet Port))*2			1.535H or later	×
CPU module data backup/restoration function*1*7		"17103" or later	---	---
Upper limit value setting for the number of backup data (CPU module data backup/restoration function)*1*7		"18052" or later	---	---
Retrying the automatic backup (CPU module data backup/restoration function)*1*7				
iQ Sensor Solution function (automatic detection of connected device, system configuration check, communication setting reflection, sensor parameter read/write, monitoring, and data backup/restoration) for built-in Ethernet (iQ Sensor Solution Reference Manual)*2		"18072" or later	1.550Y or later	---
CC-Link IE Field Network Basic function (CC-Link IE Field Network Basic Reference Manual)*7		"18112" or later	1.555D or later	×
SLMP frame send instruction (QnUCPU User's Manual (Communication via Built-in Ethernet Port))*2			---	---

Function	Function version	Serial number (first 5 digits)	Programming tool version	
			GX Works2	GX Developer
Write-protect function for device data (from outside the CPU module)*1*2	B	"19062" or later	1.566Q or later	×
Operation history function*1*2				
Simple PLC communication function (QnUCPU User's Manual (Communication via Built-in Ethernet Port))*2		"20042" or later	1.575Z or later	×
Simple PLC communication function for iQ-F series (QnUCPU User's Manual (Communication via Built-in Ethernet Port))*2		"20102" or later	1.580E or later	×

*1 For details, refer to the following.
QnUCPU User's Manual (Function Explanation, Program Fundamentals)

*2 Some models do not support the function. For details, refer to the corresponding reference.

*3 Data of the extended data register (D) and extended link register (W) can be retained in the standard ROM by using the latch data backup function if the serial number (first five digits) of the Universal model QCPU is "10042" or later.

*4 Communication using A-compatible 1E frame is available only via the Ethernet module. If the module is connected to the Ethernet port built in the CPU, this function is not available.

*5 Communication using the A-compatible 1C frame is available only via any serial communication module. If the module is connected to the built-in RS-232 interface of the CPU module, this function is not available.

*6 For the versions of the intelligent function modules that support the function, refer to the manual for the intelligent function module used.

*7 The QnUDVCPU and QnUDPVCPU support these functions.

*8 The serial number (first five digits) differs depending on the CPU module.
Q13UDHCPU, Q26UDHCPU: "10011" or later
CPU modules other than above: "10012" or later

*9 The serial number (first five digits) differs depending on the CPU module.
QnUDE(H)CPU: "14112" or later
QnUDVCPU: "15043" or later
QnUDPVCPU: "15072" or later

*10 The serial number (first five digits) differs depending on the CPU module.
QnU(D)(H)CPU, QnUDE(H)CPU: "14112" or later
QnUDVCPU: "15043" or later
QnUDPVCPU: "15072" or later

*11 The serial number (first five digits) differs depending on the CPU module.
QnUDVCPU: "15043" or later
QnUDPVCPU: "15072" or later

*12 The serial number (first five digits) differs depending on the CPU module.
QnUDE(H)CPU: "14072" or later
QnUDVCPU and QnUDPVCPU: "16043" or later

Appendix 7 Specifications of L1MEM-2GBSD and L1MEM-4GBSD

This sections describes the specifications of the SD memory cards.

Item		L1MEM-2GBSD	L1MEM-4GBSD
Type		SD	SDHC
Capacity		2G bytes	4G bytes
Number of writes		100000 times	
External dimensions	H	32mm	
	W	24mm	
	D	2.1mm	
Weight		2g	

For the handling of SD memory cards, refer to Page 259, CHAPTER 10.

Appendix 8 EMC and Low Voltage Directives

In each country, laws and regulations concerning electromagnetic compatibility (EMC) and electrical safety are enacted.
For the products sold in the European countries, compliance with the EU's EMC Directive has been a legal obligation as EMC regulation since 1996, as well as the EU's Low Voltage Directive as electrical safety regulation since 1997.
Manufacturers who recognize their products are compliant with the EMC and Low Voltage Directives are required to attach a "CE marking" on their products in European countries.
In some other countries and regions, manufacturers are required to make their products compliant with applicable laws or regulations and attach a certification mark on the products as well (such as UK Conformity Assessed (UKCA) marking in the UK, and Korea Certification (KC) marking in South Korea).
Each country works to make their regulatory requirements consistent across countries based on international standards. When the requirements are consistent, measures to comply with the EMC and electrical safety regulations become common across countries.
The UK and South Korea have enacted EMC regulations whose requirements are consistent with those of the EMC Directive.
The UK has also enacted electrical safety regulations whose requirements are consistent with those of the Low Voltage Directive. In this section, the requirements of the EMC and Low Voltage Directives are described as examples of those of the EMC and electrical safety regulations.

Appendix 8.1 Requirements for compliance with the EMC Directive

The EMC Directive specifies that products placed on the market must be so constructed that they do not cause excessive electromagnetic interference (emissions) and are not unduly affected by electromagnetic interference (immunity)".
This section summarizes the precautions for compliance with the EMC Directive of the machinery constructed with the MELSEC-Q series programmable controllers.
These precautions are based on the requirements and the standards of the regulation, however, it does not guarantee that the entire machinery constructed according to the descriptions will comply with above-mentioned directive. The method and judgement for complying with the EMC Directive must be determined by the person who construct the entire machinery.

Appendix 8.1.1 Standards relevant to the EMC Directive

(1) Regulations regarding emission

Standard	Test item	Test description	Value specified in standard
EN61131-2: 2007	CISPR16-2-3 Radiated emission*2	Radio waves from the product are measured.	• 30M-230MHz QP: 40dB μ V/m (10m in measurement range)*1 • 230M-1000MHz QP: 47dB μ V/m (10m in measurement range)
	CISPR16-2-1, CISPR16-1-2 Conducted emission*2	Noise from the product to the power line is measured.	• 150k-500kHz QP: 79dB, Mean: 66dB*1 • 500k-30MHz QP: 73dB, Mean: 60dB

*1 QP: Quasi-peak value, Mean: Average value

*2 Programmable controllers are open-type devices (devices designed to be housed inside other equipment) and must be installed inside a conductive control panel. The corresponding tests were conducted with the programmable controller installed inside a control panel.

(2) Regulations regarding immunity

Standard	Test item	Test description	Value specified in standard
EN61131-2: 2007	EN61000-4-2 Electrostatic discharge immunity*1*2	Immunity test in which electrostatic is applied to the cabinet of the equipment.	• 8kV Air discharge • 4kV Contact discharge
	EN61000-4-3 Radiated, radio-frequency, electromagnetic field immunity*1	Immunity test in which electric fields are irradiated to the product.	80% AM modulation@1kHz • 80M-1000MHz: 10V/m • 1.4G-2.0GHz: 3V/m • 2.0G-2.7GHz: 1V/m
	EN61000-4-4 Electrical fast transient/burst immunity*1*2	Immunity test in which burst noise is applied to the power line and signal line.	• AC/DC main power, I/O power, AC I/O (unshielded): 2kV • DC I/O, analog, communication: 1kV
	EN61000-4-5 Surge immunity*1*3	Immunity test in which lightning surge is applied to the power line and signal line.	• AC power line, AC I/O power, AC I/O (unshielded): 2kV CM, 1kV DM • DC power line, DC I/O power: 0.5kV CM, DM • DC I/O, AC I/O (shielded), analog, communication: 1kV CM
	EN61000-4-6 Immunity to conducted disturbances, induced by radio-frequency fields*1	Immunity test in which high frequency noise is applied to the power line and signal line	0.15M-80MHz, 80% AM modulation @1kHz, 10Vrms
	EN61000-4-8 Power-frequency magnetic field immunity*1	Immunity test in which the product is installed in inductive magnetic field	50Hz/60Hz, 30A/m
	EN61000-4-11 Voltage dips and interruption immunity*1	Immunity test in which power supply voltage is momentarily interrupted	• Apply at 0%, 0.5 cycles and zero-cross point • 0%, 250/300 cycles (50/60Hz) • 40%, 10/12 cycles (50/60Hz) • 70%, 25/30 cycles (50/60Hz)

*1 Programmable controllers are open-type devices (devices designed to be housed inside other equipment) and must be installed inside a conductive control panel. The corresponding tests were conducted with the programmable controller installed inside a control panel.

*2 The accuracy of an analog-digital converter module, digital-analog converter module, temperature input module, and temperature control module may temporarily vary within ±6%.

*3 The accuracy of an analog-digital converter module, digital-analog converter module, temperature input module, and temperature control module may temporarily vary as follows:
- Analog cable: varies within ±10%
- Cables other than analog cable (such as AC power cable): vary within ±6%

Appendix 8.1.2 Installation instructions for EMC Directive

Programmable controller is an open type device and must be installed inside a control panel for use.[*1]
This not only ensures safety but also ensures effective shielding of programmable controller-generated electromagnetic noise.

*1 Also, each network remote station needs to be installed inside the control panel. However, the waterproof type remote station can be installed outside the control panel.

(1) Control panel

- Use a conductive control panel.
- When attaching the control panel's top plate or base plate, mask painting and weld so that good surface contact can be made between the panel and plate.
- To ensure good electrical contact with the control panel, mask the paint on the installation bolts of the inner plate in the control panel so that contact between surfaces can be ensured over the widest possible area.
- Ground the control panel with a thick wire so that a low impedance connection to ground can be ensured even at high frequencies.
- Keep the diameter of the holes on the control panel to 10cm or less. If the diameter is larger than 10cm, electromagnetic wave may leak.
  In addition, because electromagnetic wave leaks through a clearance between the control panel and its door, reduce the clearance as much as possible.
  Use of EMI gaskets (sealing the clearance) can suppress undesired radiated emissions.

The tests were conducted by Mitsubishi Electric Corporation using a control panel having damping characteristics of 37dB (maximum) and 30dB (average) (measured at 3m distance, 30 to 300MHz).

(2) Connection of power line and ground wire

Ground wire and power supply cable for the programmable controller system must be connected as described below.

- Provide an grounding point near the power supply module. Ground the power supply's LG and FG terminals (LG : Line Ground, FG : Frame Ground) with the thickest and shortest wire possible. (The wire length must be 30cm or shorter.) The LG and FG terminals function is to pass the noise generated in the programmable controller system to the ground, so an impedance that is as low as possible must be ensured. As the wires are used to relieve the noise, the wire itself carries a large noise content and thus short wiring means that the wire is prevented from acting as an antenna.
- The ground wire led from the grounding point must be twisted with the power supply wires. By twisting with the ground wire, noise flowing from the power supply wires can be relieved to the ground. However, if a filter is installed on the power supply wires, the wires and the ground wire may not need to be twisted.

Appendix 8.1.3 Cables

The cables extracted from the control panel contain a high frequency noise component. On the outside of the control panel, therefore, they serve as antennas to emit noise.
To prevent noise emission, use shielded cables for the cables which are connected to the I/O modules and intelligent function modules and may be extracted to the outside of the control panel.
The use of a shielded cable also increases noise resistance.
The signal lines (including common line) of the programmable controller, which are connected to I/O modules, intelligent function modules and/or extension cables, have noise durability in the condition of grounding their shields by using the shielded cables. If a shielded cable is not used or not grounded correctly, the noise resistance will not meet the specified requirements.

(1) Grounding of shield section of shielded cable

- Ground the exposed shield section of the shielded cable close to the module. Confirm that the grounded cables are not induced to electromagnetic from the cables, which are not yet grounded.
- Ground the exposed shield section of the shielded cable to large area on the control panel.
  A clamp fitting can be used as shown below.
  In this case, apply a cover on the painted inner wall surface of the control panel, which comes in contact with the clamp, to prevent the surface from being painted.

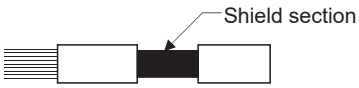

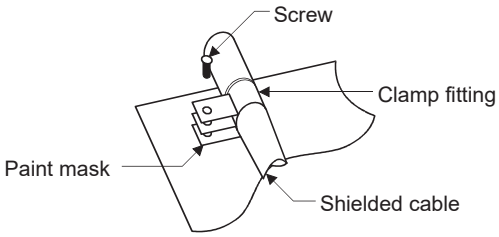

Note) The method of grounding with a vinyl-coated wire soldered onto the shielded section of the shielded cable as shown below is not recommended. Doing so will raise the high-frequency impedance, resulting in loss of the shielding effect.

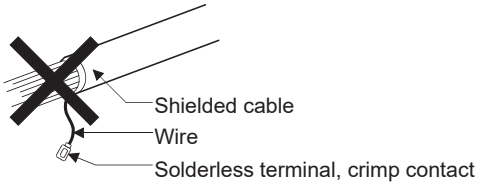

(2) Grounding cables using a cable clamp

Use shielded cables for external wiring of the following modules, and ground the shield section of the shielded cable to the control panel using the AD75CK cable clamp (Mitsubishi). (Ground the shield section within 20 to 30cm from the module.)

- CC-Link IE Field Network module
- Positioning module
- Channel isolated pulse input module
- Multichannel high-speed counter module
- Loop control module
- Load cell input module
- Temperature control module
- 4Mpps capable high-speed counter module
- Multi function counter/timer module
- Analog I/O module

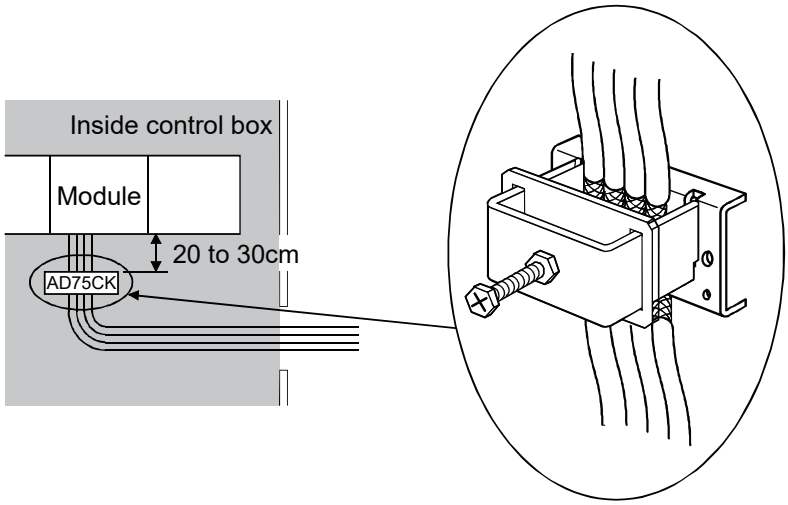

The AD75CK enables up to four cables to be grounded together if the outside diameter of the shielded cable is about 7mm.

For details of the AD75CK, refer to the AD75CK-type Cable Clamping Instruction Manual.

(3) MELSECNET/H module

Always use a double-shielded coaxial cable (MITSUBISHI CABLE INDUSTRIES, LTD.: 5C-2V-CCY) for the coaxial cables MELSECNET/H module. Radiated noise in the range of 30HMz or higher can be suppressed by using double-shielded coaxial cables. Ground the double-shielded coaxial cable by connecting its outer shield to the ground.

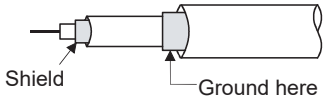

Refer to (1) for the grounding of the shield.

(4) Built-in Ethernet port QCPU module, Ethernet module, FL-net module, Web server module, MES interface module, high speed data logger module, high speed data communication module, MODBUS/TCP interface module

Precautions for using AUI cables, twisted pair cables and coaxial cables are described below.

- Always ground the AUI cables[*1] connected to the 10BASE5 connectors. Because the AUI cable is a shielded type, strip part of the jacket as shown below and ground the exposed shield section to the ground as much as possible.

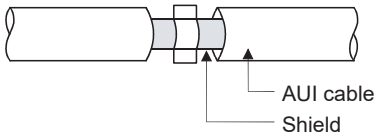

Refer to (1) for the grounding of the shield.

*1 Make sure to install a ferrite core for the cable.
As a ferrite core, ZCAT2032 manufactured by TDK is recommended.

- Use a shielded twisted pair cable for connection to the 10BASE-T or 100BASE-TX connector.
Strip a part of the jacket as shown below and ground the exposed shield section to the ground as much as possible.

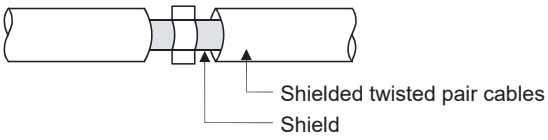

Refer to (1) for the grounding of the shield.

- Always use double-shielded coaxial cables as the coaxial cables[*2] connected to the 10BASE2 connectors. Ground the double-shielded coaxial cable by connecting its outer shield to the ground.

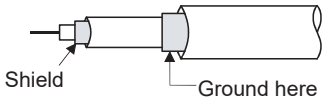

Refer to (1) for the grounding of the shield.

*2 Make sure to install a ferrite core for the cable.
As a ferrite core, ZCAT3035 manufactured by TDK is recommended.

(5) CC-Link IE Field Network module

This section describes the precautions for using the CC-Link IE Field Network cable.

- Use the CC-Link IE Field Network cable (SCE5EW-S □ M).
- Because the CC-Link IE Field Network cable is a shielded type, strip part of the jacket as shown below and ground the exposed shield section to the ground as much as possible.

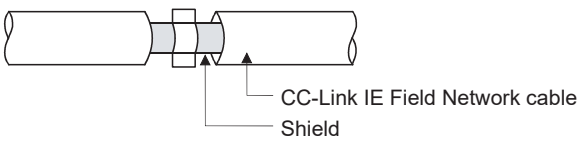

(6) CC-Link module

- Be sure to ground the cable shield that is connected to the CC-Link module close to the exit of control panel or to any of the CC-Link stations within 30cm from the module or stations.
  The CC-Link dedicated cable is a shielded cable. Remove a part of the jacket as shown below and ground the exposed shield section to the ground as much as possible.

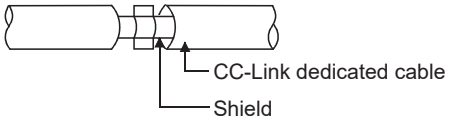

- Always use the specified CC-Link dedicated cable.
- Use the FG terminals of the CC-Link module and CC-Link stations as shown below to connect to the FG line inside the control panel.

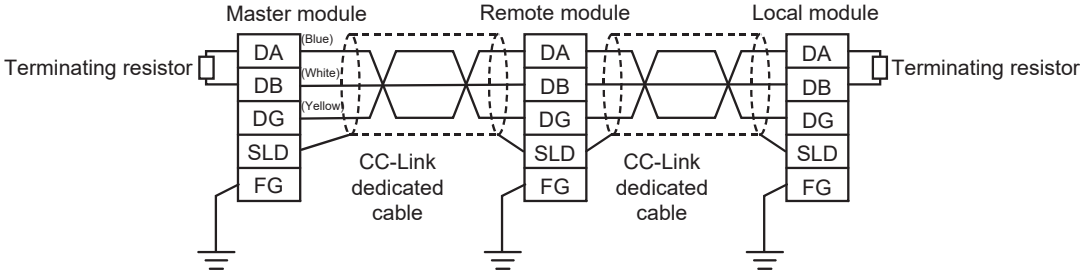

- Use a CE-marked power supply to which the module power supply or external power supply is connected.
  Ground the FG terminals.

Power supply model name		DLP75-24-1	DLP100-24-1	DLP120-24-1	DLP180-24-1	DLP240-24-1	DRJ240-24-1
Rated input voltage		100 to 240VAC					
Rated output	Voltage	24VDC					
	Current	3.1A	4.1A	5.0A	7.5A	10.0A	10.0A

Power supply model name		PS5R-VF24	PS6R-F24
Rated input voltage		100 to 240VAC	
Rated output	Voltage	24VDC	
	Current	5.0A	

- Each power line connecting to the external power supply terminal or module power supply terminal must be 30m or less.
- Install a noise filter to the external power supply. Use the noise filter having an attenuation characteristic, MA1206, RSEN-2006 (TDK-Lambda), or equivalent. Note that a noise filter is not required if the module is used in Zone A defined in EN61131-2.
- Keep the length of signal cables connected to the analog input terminals of the following modules to 30m or less. Wire cables connected to the external power supply and module power supply terminal in the control panel where the module is installed.
  AJ65BT-64RD3
  AJ65BT-64RD4
  AJ65BT-68TD

- For the cable connected to the power supply terminal of the AJ65SBT-RPS, AJ65SBT-RPG or AJ65BT-68TD, install a ferrite core with attenuation characteristic equivalent to that of the ZCAT3035-1330 from TDK Corporation. Twist the cable around the ferrite core by one as shown below.

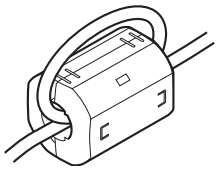

- To supply the module power supply terminal of the remote I/O module with power using the AC/DC power supply, satisfy the conditions shown below.
  - Install the AC/DC power supply in the control panel where the module is installed.
  - Use a CE-marked AC/DC power supply and ground the FG terminals.
    (The AC/DC power supply used for the tests conducted by Mitsubishi: TDK-Lambda Corporation: DLP-120-24-1, DRJ240-24-1, IDEC CORPORATION: PS5R-VF, PS6R-F24)
  - For the cable connected to the AC input terminal and DC output terminals of the AC/DC power supply, attach a ferrite core. Twist the cable around the ferrite core by one as shown below.
    (The ferrite core used for the tests conducted by Mitsubishi: TOKIN Corporation: ESD-SR-250)

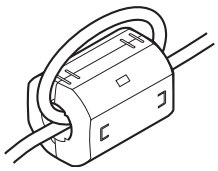

- When using the AC/DC power supply to provide power to the module power supply terminals of the AJ65SBT-64AD/62DA, AJ65SBT2B-64AD/DA/TD/RD3, and AJ65VBTCU-68ADVN/ADIN/DAVN, observe the following.
  - Install the AC/DC power supply in the control panel where the module is installed.
  - Use a CE-marked AC/DC power supply, and ground the FG terminal.
    (The AC/DC power supply used for the tests conducted by Mitsubishi: TDK-Lambda Corporation: DLP-120-24-1, DRJ240-24-1, DRJ100-24-1)
- When using the AC/DC power supply to provide power to the module power supply terminal of the AJ65SBT2B-64AD, observe the following.
  - For the cable connected to the DC output terminal of the AC/DC power supply, attach a ferrite core at the following locations.
    - Near the DC output terminal of the AC/DC power supply
    - Near the power supply input terminal of the AJ65SBT2B-64AD

    Wrap the cable around the ferrite core by one as follows.
    (The ferrite core used for the tests conducted by Mitsubishi: TOKIN Corporation: ESD-SR-250)

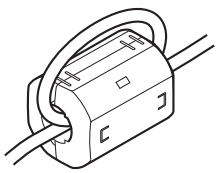

- When using the AC/DC power supply to provide power to the module power supply terminal of the AJ65SBT2B-64DA/RD3, observe the following.
  - For the cable connected to the DC output terminal of the AC/DC power supply, attach a ferrite core at the following locations.
    - Near the DC output terminal of the AC/DC power supply
    - Near the power supply input terminal of the AJ65SBT2B-64DA/RD3

    Use the ferrite core with the cable threaded through it as shown below.
    (The ferrite core used for the tests conducted by Mitsubishi: TDK Corporation: ZCAT3035-1330)

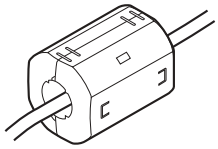

- When using the AC/DC power supply to provide power to the module power supply terminal of the AJ65SBT2B-64TD, observe the following.
  - For the cable connected to the AC input terminal and DC output terminal of the AC/DC power supply, attach a ferrite core at the following locations. For how to attach a ferrite core to the cable, observe the following.

    - Near the AC input terminal of the AC/DC power supply : Thread the cable through the ferrite core.
    - Near the DC output terminal of the AC/DC power supply : Wrap the cable around the ferrite core by one.
    - Near the power supply input terminal of the AJ65SBT2B-64TD : Wrap the cable around the ferrite core by one.

    (The ferrite core used for the tests conducted by Mitsubishi: TDK Corporation: ZCAT3035-1330, KITAGAWA INDUSTRIES CO., LTD.: RFC-8)

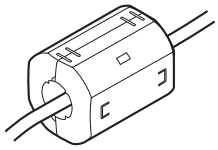

Thread the cable through the ferrite core.

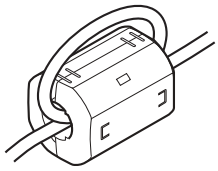

Wrap the cable around the ferrite core by one.

(7) CC-Link/LT module

To supply the CL2DA2-B and CL2AD4-B with power using the CL1PAD1, keep the length of the power cable connected from the CL1PAD1 to the external power supply to 30m or less.

(8) Positioning module

- Use the cables with following length when connecting a drive unit to the QD75.
  - QD75P□N/QD75P□ : 2m or less
  - QD75D□N/QD75D□ : 10m or less
- Use the cable whose length is 30m or less when connecting it to an external device for the QD75. (except for a pulse output)

(9) 4Mpps capable high-speed counter module

- Keep the length of a power cable connected to the external coincidence output power supply terminal to 10m or less.
- Keep the length of a cable connected to an external device to 30m or less.

(10)Multi function counter/timer module

- Install the DC power connected to the encoder inside the same control panel where the module is installed.
- Install a ferrite core to each DC power cable connected to the module and the controller.
  The ferrite core ZCAT3035-1330 (TDK Corporation) is recommended.
- Keep the length of a cable connected to the encoder to 3m or less.
- Keep the length of a cable connected to the controller or external output terminal to 30m or less.
- Keep the length of a DC power cable connected to the external device to 3m or less.

(11)Q68TD-G (-H01/-H02) type channel isolated thermocouple input module and Q68RD3-G type channel isolated RTD input module

Wiring as shown below is required.

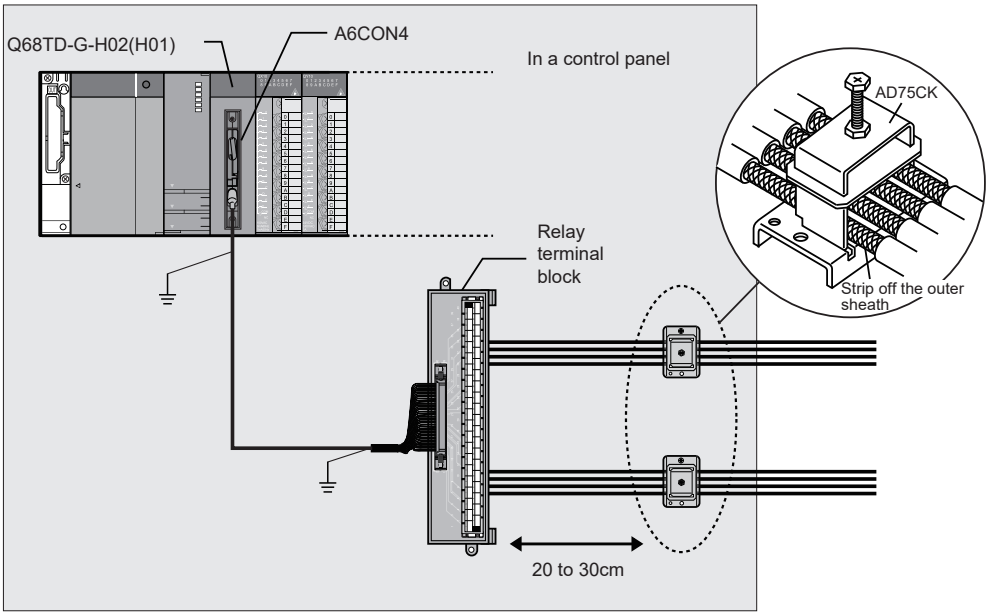

- Use a shielded cable for connection between the external device connector and relay terminal block, and ground the shield section of the cable to the control panel. Keep the wiring length to 3m or less.
- Use a shielded cable for external wiring, and ground the shield section of the cable to the control panel using the AD75CK cable clamp (Mitsubishi). (Ground the shield section within 20 to 30cm from the relay terminal block.)
- Before handling the relay terminal block, touch a grounded metal object to discharge the static electricity from the human body.

(12)Analog I/O module

- Install a ferrite core to the external power supply connection cable, keeping a distance of 4cm from the module.
  Ferrite core: ZCAT3035-1330 manufactured by TDK Corporation

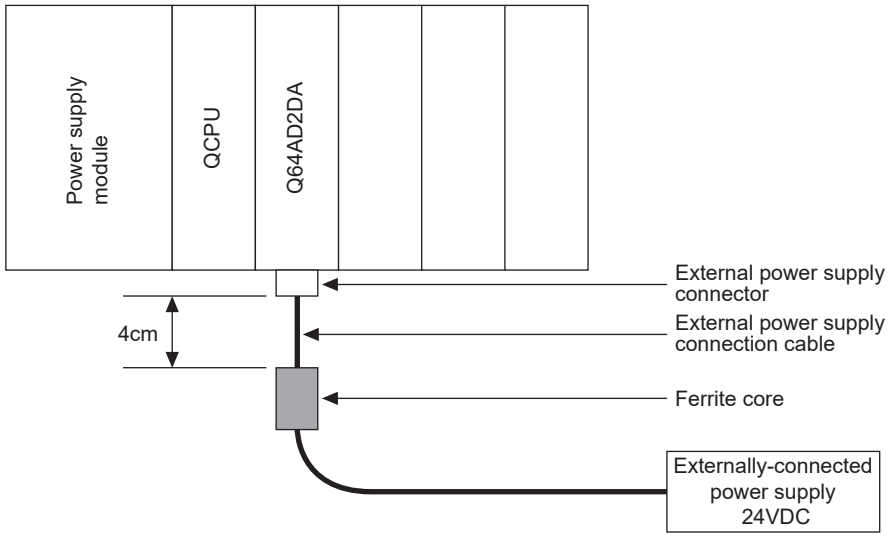

(13)Redundant CPU

Use the QC□TR tracking cable, and ground the shield section of the cable to the control panel using the AD75CK cable clamp (Mitsubishi). For the grounding method, refer to (2).

(14)I/O signal cables and other communication cables

- For I/O signal cables (including common lines) and other communication cables (such as cables for RS-232, RS-422, and CC-Link), ground the shield sections (in the same way as explained in (1)) when the cables are extended out of the control panel.
- To set the input response time of the input module and the interrupt module to 0.1ms or less, keep the each cable length of I/O signal cables (including common lines) to 30m or shorter.

(15)Extension cables

For extension cables, ground the shield sections (in the same way as explained in (1)) when the cables are extended out of the control panel.

(16)Power cables for external power supply terminal

- Use a CE-marked AC-DC power supply as an external power supply for the following modules. Install the AC-DC power supply inside the same control panel where the module is installed. Keep the length of a power cable connected to the external power supply terminal to 30m or less.
  - Analog-digital converter module
  - Analog I/O module
  - Temperature input module
  - Loop control module
  - High-speed counter module
  - Digital-analog converter module
  - Load cell input module
  - Temperature control module
  - Pulse input module
  - Positioning module
- Use a CE-marked AC-DC power supply as an external power supply for the QJ71LP21S-25.
- Use a CE-marked AC-DC power supply as an external power supply for the QJ71E71-B5 and QJ71FL71-B5(-F01). Keep the length of a power cable to 3m or less.

(17)Peripheral cable

Install ferrite cores at both ends of a peripheral cable (RS-232 cable or USB cable) extended out of the control panel.
(Ferrite core used for the tests conducted by Mitsubishi: TDK ZCAT3035-1330)

Appendix 8.1.4 Installation environment of the CC-Link/LT module and the AS-i module

(1) CC-Link/LT module

Use the module under the environment of Zone A[*1]. For the applicable zone of the following products, refer to the manual came with each product.

- CL1Y4-R1B1
- CL1Y4-R1B2
- CL1XY4-DR1B2
- CL1XY8-DR1B2
- CL1PSU-2A

(2) AS-i module

Use the module under the environment of Zone A[*1].

*1 Zone defines categories according to industrial environment, specified in the EMC and Low Voltage Directives, EN61131-2.
Zone C: Factory mains (isolated from public mains by dedicated transformer)
Zone B: Dedicated power distribution, secondary surge protection (rated voltage: 300V or less)
Zone A: Local power distribution, protected from dedicated power distribution by AC/DC converter and insulation transformer (rated voltage: 120V or less)

Appendix 8.1.5 Power supply part of the power supply module, Q00JCPU, and Q00UJCPU

Ground the LG and FG terminals by using a ground wire as thick and short as possible (2mm in diameter).

Appendix 8.1.6 Precautions when using a MELSEC-A series module

This section describes precautions when a MELSEC-A series module is used by connecting the QA1S5□B, QA1S6□B, QA1S6ADP+A1S5□B/A1S6□B, QA6□B, or QA6ADP+A5□B/A6□B extension base unit to the system.

(1) Cable

(a) Grounding the shield section of shielded cable

For the grounding method, refer to, refer to Page 677, Appendix 8.1.3 (1).

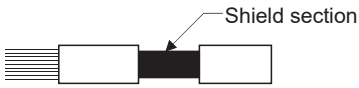

(b) Positioning modules

Precautions for configuring the machinery compliant with the EMC Directives using the A1SD75P□-S3 (abbreviated as A1SD75 hereafter), AD75P□-S3 (abbreviated as AD75 hereafter) are described below.

1) When wiring cable of a 2m or less
   - Ground the shield of the external device connection cable with a cable clamp. (Ground the shield at the closest location to the A1SD75/AD75 external wiring connector.)
   - Wire external device connection cables to drive modules and external devices by the shortest distance.
   - Install the drive unit in the same panel.

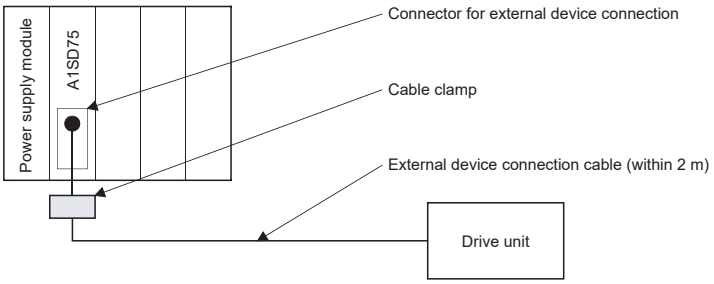

2) When wiring with cable that exceeds 2m, but is 10m or less
   - Ground the shield of the external device connection cable with a cable clamp. (Ground the shield at the closest location to the A1SD75/AD75 external wiring connector.)
   - Wire external device connection cables to drive modules and external devices by the shortest distance.
   - Install a ferrite core.

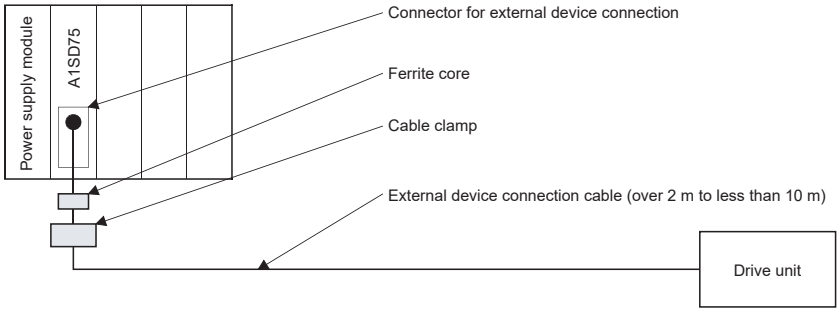

3) Ferrite core and cable clamp types
   • Cable clamp
     Type: AD75CK (Mitsubishi)
   • Ferrite core
     Type: ZCAT3035-1330 (TDK ferrite core)

Cable length	Prepared part	Number of ferrite cores		
		1 axis	2 axes	3 axes
Within 2m	AD75CK	1	1	1
2m to 10m	AD75CK	1	1	1
	ZCAT3035-1330	1	2	3

4) Cable clamp mounting position
   Refer to ☞ Page 678, Appendix 8.1.3 (2).

(c) I/O signal lines

Ground the shield section of an I/O signal cable (including common line) in the same way as explained in Page 677, Appendix 8.1.3 (1) when it is extended out of the control panel.

(d) Extension cable

Ground the shield section of an extension cable in the same way as explained in Page 677, Appendix 8.1.3 (1) when it is extended out of the control panel.

(2) Power supply module

The following table lists the precautions required for each power supply module. Always observe the items noted as precautions.

Model	Precautions
A1S61P, A1S62P, A61P, A62P	Not usable
A1S63P*1, A163P	Use the CE marked 24VDC panel power equipment.
A1S61PEU, A1S62PEU, A1S61PN, A1S62PN, A61PN, A61PEU, A62PEU, A68P	Always ground the LG and FG terminals after short-circuiting them.

*1 Installing a filter to a power line is not required if the version of the A1S63P is F or later.
Make sure to use the CE-marked 24VDC panel power equipment.

Appendix 8.1.7 Others

(1) SD memory card

The SD memory cards manufactured by Mitsubishi (NZ1MEM-□GBSD and L1MEM-□GBSD) conform to IEC 61131-2 when being used in a CPU module.

(2) Ferrite core

A ferrite core has the effect of reducing radiated noise in the 30MHz to 100MHz band.
It is not required to fit ferrite cores to cables, but it is recommended to fit ferrite cores if shield cables pulled out of the enclosure do not provide sufficient shielding effects.*1
Note that the ferrite cores must be fitted to the cables in the position immediately before they are pulled out of the enclosure. If the fitting position is improper, the ferrite will not produce any effect.

*1 For some models, a ferrite core needs to be installed on the appropriate position.
☞ Page 677, Appendix 8.1.3
☞ Page 686, Appendix 8.1.6

(3) Noise filter (power supply line filter)

A noise filter is a component which has an effect on conducted noise.
It is not required to attach the noise filter to the power supply line except the A61PEU, A62PEU power supply modules and some models, however, attaching it can suppress more noise.
(The noise filter has the effect of reducing conducted noise of 10 MHz or less.)

The precautions required when installing a noise filter are described below.

- Do not bundle the wires on the input side and output side of the noise filter. When bundled, the output side noise will be induced into the input side wires from which the noise was filtered.

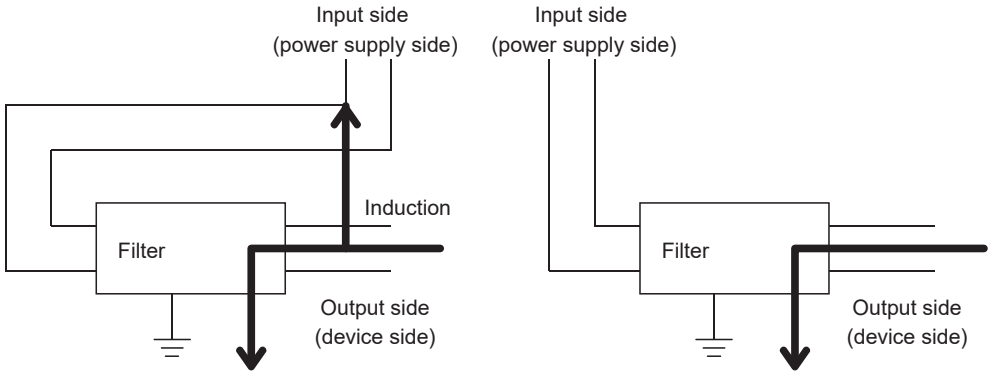

The noise will be included when the input and output wires are bundled.

Separate and lay the input and output wires.

- Ground the noise filter grounding terminal to the control cabinet with the shortest wire possible (approx. 10cm).

Remark

Noise filter model name	FN343-3/01	FN660-6/06	ZHC2203-11
Manufacturer	SCHAFFNER	SCHAFFNER	TDK
Rated current	3A	6A	3A
Rated voltage	250V		

(4) Isolation transformer

An isolation transformer has an effect on reducing conducted noise (especially, lightning surge).
Lightning surge may cause a malfunction of the programmable controller.
As a measure against lightning surge, connect an isolation transformer as shown below.
The use of an isolation transformer reduces an impact of lightning.

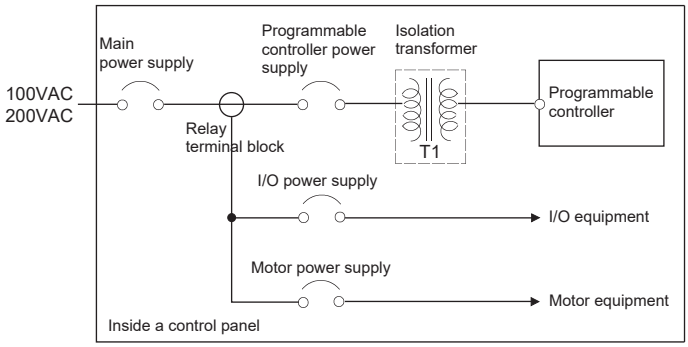

Use the isolation transformer according to its usage environment and storage environment. The following table lists the performance specifications of the recommended isolation transformer.

Item	Specifications
Number of phase	Single phase
Frequency	50/60Hz
Rated capacity	*1
Secondary voltage*2	200V/100V
Rating	Continuous
Heat resistance class (insulation class)	H
Electrostatic shield	Provided
Isolation resistance and withstand voltage*3	4200V/1 minute, 5MΩ or more between P and S
	2500V/1 minute, 7MΩ or more between P and iron core
	2500V/1 minute, 7MΩ or more between S and iron core
Standard*4	UL506, UL5085
	EN 61558-1
	EN 61558-2-4

*1 Select an isolation transformer considering the power capacity of equipment to be used.
*2 Select the secondary voltage so that the input voltage specifications of the power supply module are met.
*3 Among required voltage values specified in UL and EN standards, stricter values are listed here.
*4 Use an isolation transformer in the conditions that satisfy the requirements of standards.

Appendix 8.2 Requirements to compliance with the Low Voltage Directive

The Low Voltage Directive requires each device that operates with the power supply ranging from 50 to 1000VAC and 75 to 1500VDC to satisfy the safety requirements.
This section summarizes the precautions for installation and wiring of the MELSEC-Q series programmable controllers to comply with the Low Voltage Directive.
These descriptions are based on the requirements and standards of the regulation, however, it does not guarantee that the entire machinery manufactured based on the descriptions complies with the above-mentioned directive. The method and judgment for the low voltage directive must be left to the manufacturer's own discretion.

Appendix 8.2.1 Standard applied for MELSEC-Q series programmable controller

The standard applied for MELSEC-Q series programmable controller is EN61131-2 safety of devices used in measurement rooms, control rooms, or laboratories.
The MELSEC-Q series programmable controller which operate at the rated voltage of 50VAC/75VDC or above are also developed to conform to the above standard.
The modules which operate at the rated voltage of less than 50VAC/75VDC are out of the Low Voltage Directive application range.
For CE-marked products, please consult your local Mitsubishi representative.

Appendix 8.2.2 MELSEC-Q series programmable controller selection

(1) Power supply module

There are dangerous voltages (voltages higher than 42.4V peak) inside the power supply modules of the 100/200VAC rated I/O voltages. Therefore, the CE marked models are enhanced in insulation internally between the primary and secondary.

(2) I/O module

There are dangerous voltages (voltages higher than 42.4V peak) inside the I/O modules of the 100/200VAC rated I/O voltages. Therefore, the CE marked models are enhanced in insulation internally between the primary and secondary.
The I/O modules of 24VDC or less rating are out of the Low Voltage Directive application range.

(3) CPU module, memory card, SD memory card, extended SRAM cassette, base unit

Using 5VDC circuits inside, the above modules are out of the Low Voltage Directive application range.

(4) Intelligent function modules (special function modules)

The intelligent function modules such as analog-digital converter modules, digital-analog converter modules, network modules, and positioning modules (special function modules) are out of the scope of the low voltage directive because the rated voltage is 24VDC or less.

(5) Display device

Use the CE marked display device.

Appendix 8.2.3 Power supply

The insulation specification of the power supply module was designed assuming installation category II. Be sure to use the installation category II power supply to the programmable controller.
The installation category indicates the durability level against surge voltage generated by a thunderbolt. Category I has the lowest durability; category IV has the highest durability.

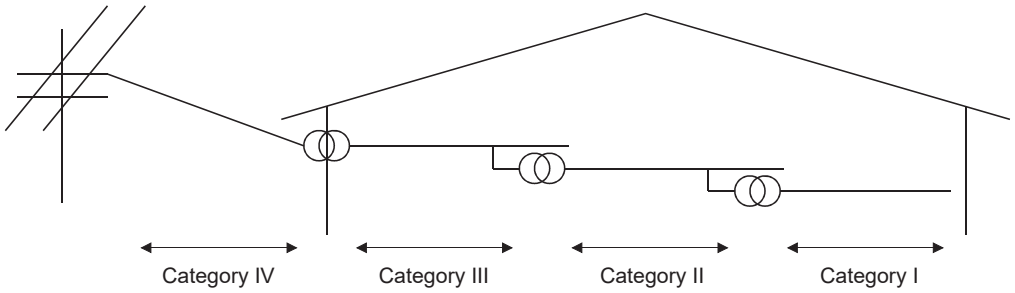

Category II indicates a power supply whose voltage has been reduced by two or more levels of isolating transformers from the public power distribution.

Appendix 8.2.4 Control panel

Programmable controller is an open type device (a device designed to be housed inside other equipment) and must be installed inside a control panel for use.*1

*1 Also, each network remote station needs to be installed inside the control panel.
However, the waterproof type remote station can be installed outside the control panel.

(1) Electrical shock prevention

The control panel must be handled as shown below to protect a person who does not have adequate knowledge of electricity from an electric shock.

- Lock the control panel so that only those who are trained and have acquired enough knowledge of electric facilities can open the control panel.
- The control panel must have a structure which automatically stops the power supply when the box is opened.
- For electric shock protection, use IP20 or greater control panel.

(2) Dustproof and waterproof features

The control panel also has the dustproof and waterproof functions. Insufficient dustproof and waterproof features lower the insulation withstand voltage, resulting in insulation destruction.
The insulation in our programmable controller is designed to cope with the pollution level 2, so use in an environment with pollution level 2 or below.

Pollution level 1: An environment where the air is dry and conductive dust does not exist.
Pollution level 2: An environment where conductive dust does not usually exist, but occasional temporary conductivity occurs due to the accumulated dust. Generally, this is the level for inside the control box equivalent to IP54 in a control room or on the floor of a typical factory.
Pollution level 3: An environment where conductive dust exits and conductivity may be generated due to the accumulated dust.
An environment for a typical factory floor.
Pollution level 4: Continuous conductivity may occur due to rain, snow, etc. An outdoor environment.

As shown above, the programmable controller can realize the pollution level 2 when stored in a control panel equivalent to IP54.

Appendix 8.2.5 External wiring

(1) Module power supply and external power supply

For the remote module which requires 24VDC as module power supply, the 5/12/24/48VDC I/O module, and the intelligent function module (special function module) which requires the external power supply, use the 5/12/24/48VDC circuit which is doubly insulated from the hazardous voltage circuit or use the power supply whose insulation is reinforced.

(2) External devices

When a device with a hazardous voltage circuit is externally connected to the programmable controller, use a model whose circuit section of the interface to the programmable controller is intensively insulated from the hazardous voltage circuit.

(3) Reinforced insulation

Reinforced insulation means an insulation having the following withstand voltage.

Rated voltage of hazardous voltage area	Surge withstand voltage (1.2/50μs)
150VAC or lower	2500V
300VAC or lower	4000V

Appendix 9 General Safety Requirements

When the programmable controller is powered on and off, normal control output may not be done momentarily due to a delay or a start-up time difference between the programmable controller power supply and the external power supply (DC in particular) for the control target.
For example, if the external power supply for the controlled object is switched on in a DC output module and then the programmable controller power supply is switched on, the DC output module may provide false output instantaneously at power-on of the programmable controller. Therefore, it is necessary to make up a circuit that can switch on the programmable controller power supply first.
Also, malfunction may occur if an external power supply or the programmable controller is faulty.
To prevent any malfunction which may affect the whole system and in a fail-safe viewpoint, provide an external circuit to the areas which can result in machine breakdown and accidents (e.g. emergency stop, protective and interlock circuits) must be constructed outside the programmable controller.
The following page gives examples of system designing in the above viewpoint.

(1) System design circuit example (when not using $\overline{\text{ERR.}}$ terminal of power supply module, or using Q00JCPU)

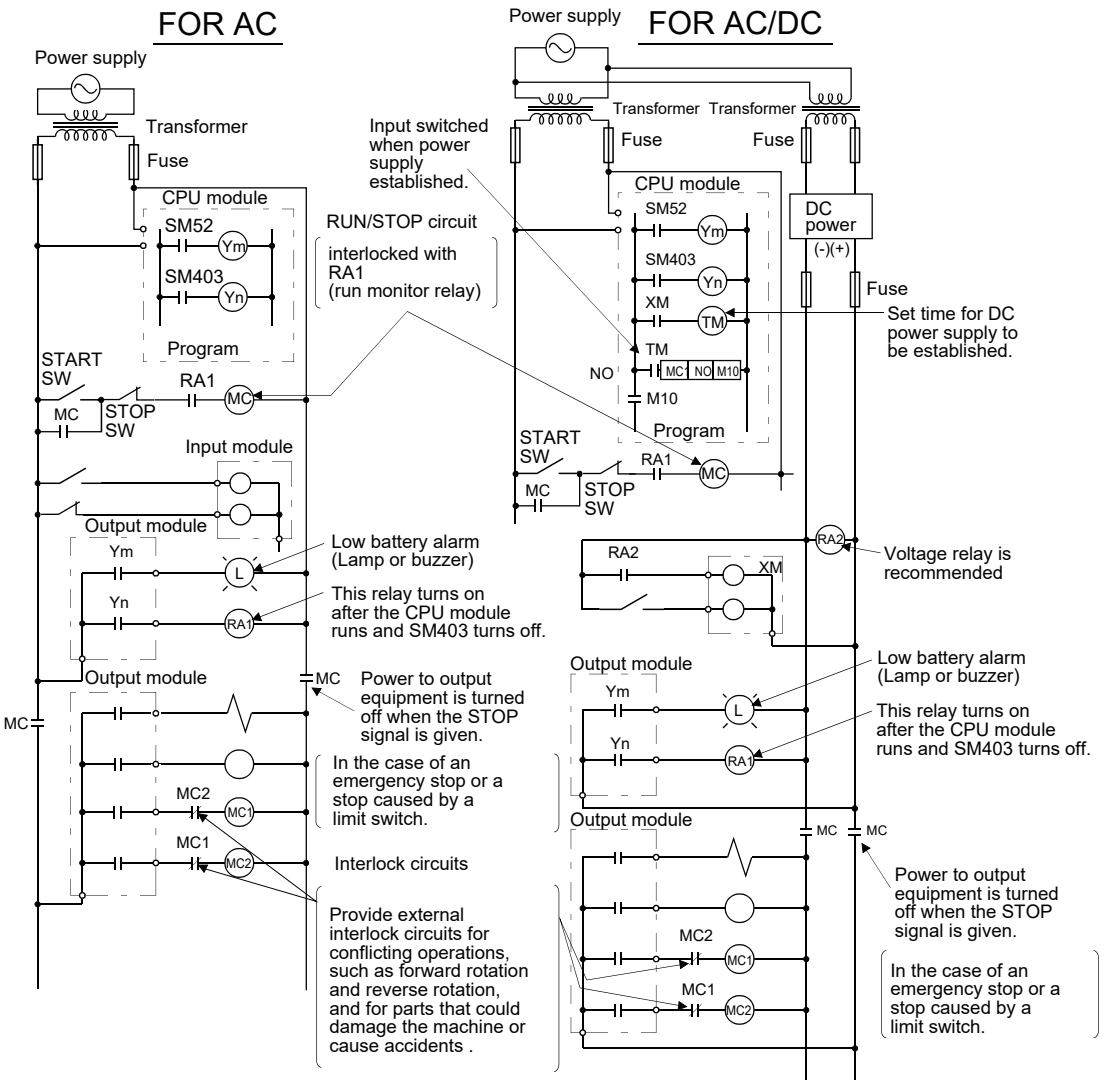

The power-on procedure is as follows:

For AC

1) Power on the programmable controller.
2) Set CPU to RUN.
3) Turn on the start switch.
4) When the magnetic contactor (MC) comes on, the output equipment is powered and may be driven by the program.

For AC/DC

1) Power on the programmable controller.
2) Set CPU to RUN.
3) When DC power is established, RA2 goes ON.
4) Timer (TM) times out after the DC power reaches 100%. (The TM set value must be the period of time from when RA2 goes on to the establishment of 100% DC voltage. Set this value to approximately 0.5 seconds.)
5) Turn on the start switch.
6) When the magnetic contactor (MC) comes on, the output equipment is powered and may be driven by the program. (If a voltage relay is used at RA2, no timer (TM) is required in the program.)

(2) System design circuit example (when using $\overline{\text{ERR.}}$ terminal of power supply module)

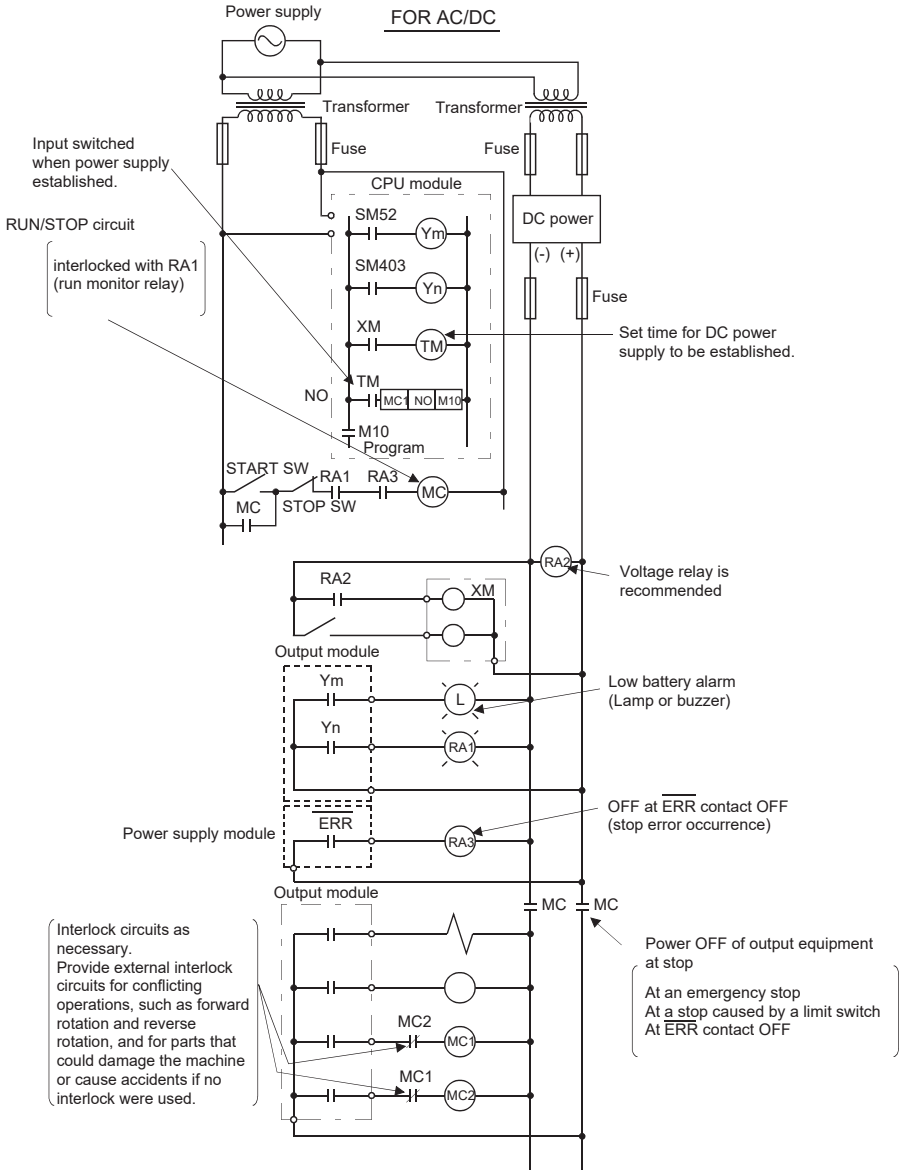

The power-on procedure is as follows:

For AC/DC

1) Power on the programmable controller.
2) Set CPU to RUN.
3) When DC power is established, RA2 goes on.
4) Timer (TM) times out after the DC power reaches 100%. (The TM set value must be the period of time from when RA2 goes ON to the establishment of 100% DC voltage. Set this value to approximately 0.5s.)
5) Turn on the start switch.
6) When the magnetic contactor (MC) comes on, the output equipment is powered and may be driven by the program. (If a voltage relay is used at RA2, no timer (TM) is required in the program.)

(3) Fail-safe measures against failure of the programmable controller

Failure of a CPU module or memory can be detected by the self-diagnostic function. However, failure of I/O control area may not be detected by the CPU module.

In such cases, all I/O points turn on or off depending on a condition of problem, and normal operating conditions and operating safety cannot sometimes be maintained.

Though Mitsubishi programmable controllers are manufactured under strict quality control, they may cause failure or abnormal operations due to unspecific reasons. To prevent the abnormal operation of the whole system, machine breakdown, and accidents, fail-safe circuitry against failure of the programmable controller must be constructed outside the programmable controller.

A system configuration example and fail-safe circuit example are shown below.

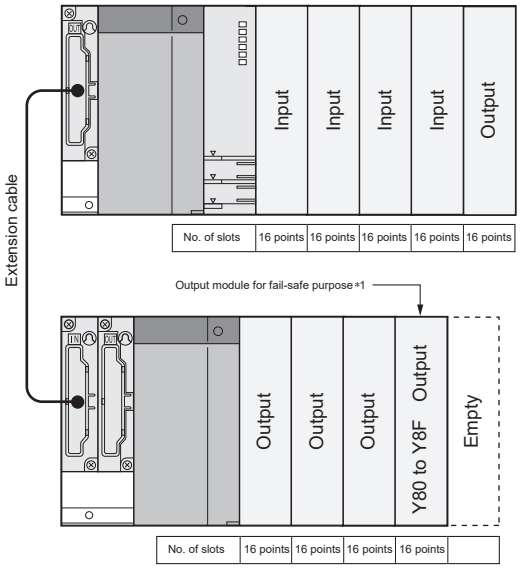

*1 The output module for fail-safe purpose must be mounted in the last slot of the system. (Y80 to Y8F in the above system.)

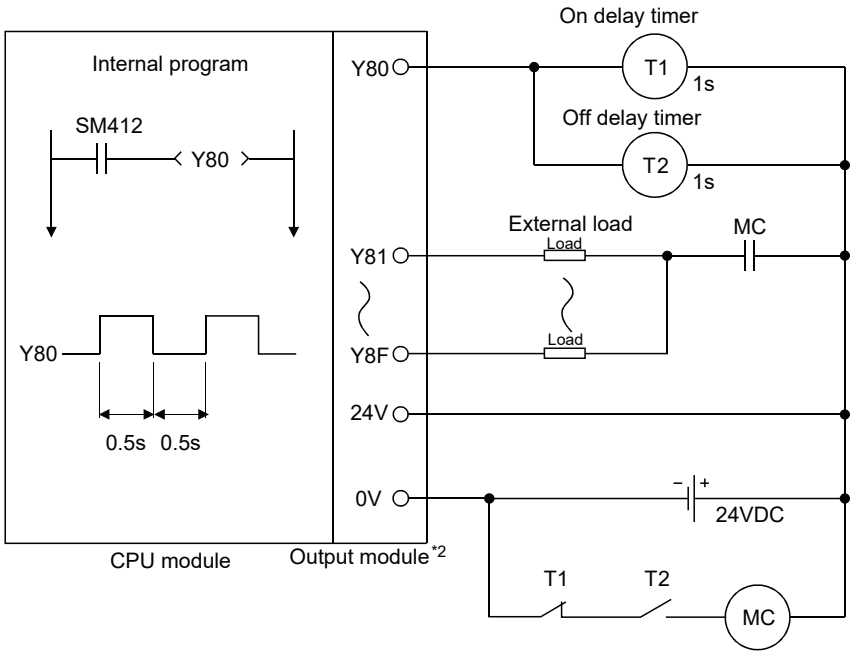

*2 Y80 repeats turning on and then off at 0.5s intervals.
Use a no-contact output module (transistor in the example shown above).

Appendix 10 Calculating Heat Generation of Programmable Controller

The ambient temperature inside the panel storing the programmable controller must be suppressed to an ambient temperature of 55°C or less, which is specified for the programmable controller.
For the design of a heat releasing panel, it is necessary to know the average power consumption (heating value) of the devices and instruments stored inside.
Here the method of obtaining the average power consumption of the programmable controller system is described.
From the power consumption, calculate a rise in ambient temperature inside the panel.

How to calculate average power consumption

The power consuming parts of the programmable controller are roughly classified into six blocks as shown below.

(1) Power consumption of power supply module

The power conversion efficiency of the power supply module is approx. 70 %, while 30 % of the output power is consumed as heat. As a result, 3/7 of the output power is the power consumption.
Therefore the calculation formula is as follows.

$$W_{PW} = \frac{3}{7} \times \{(I_{5V} \times 5) + (I_{15V} \times 15) + (I_{24V} \times 24)\} \text{ (W)}$$

I_{5V} : Current consumption of logic 5VDC circuit of each module
I_{15V} : Current consumption of 15VDC external power supply part of intelligent function module
I_{24V} : Average current consumption of 24VDC power supply for internal consumption of the output module

Point

In a redundant power supply system, the same calculation method is applied.
(When 2 redundant power supply modules are placed in parallel, they run sharing the load current half-and-half.)

(2) Total power consumption for 5VDC logic circuits of all modules (including CPU module)

The power consumption of the 5VDC output circuit section of the power supply module is the power consumption of each module*1. (The current consumption of the base unit is included.)

$W_{5V} = I_{5V} \times 5$ (W)

*1 For the power consumption of the motion CPU and PC CPU module, refer to the user's manuals of the corresponding modules.

(3) Total of 24 VDC average power consumption of the output module (power consumption for simultaneous ON points)

The average power of the 24VDC external power supply is the total power consumption of each module.

$W_{24V} = I_{24V} \times 24 \times$ Simultaneous ON rate (W)

(4) Average power consumption due to voltage drop in the output section of the output module (power consumption for simultaneous ON points)

$W_{OUT} = I_{OUT} \times Vdrop \times$ Number of output points $\times$ Simultaneous ON rate (W)

I_{OUT} : Output current (current in actual use) (A)
Vdrop : Voltage drop in each output module (V)

(5) Average power consumption of the input section of the input module (power consumption for simultaneous ON points)

$W_{IN} = I_{IN} \times E \times$ Number of input points $\times$ Simultaneous ON rate (W)

I_{IN} : Input current (effective value for AC) (A)
E : Input voltage (voltage in actual use) (V)

(6) Power consumption of the external power supply section of the intelligent function module

$W_S = I_{+15V} \times 15 + I_{-15V} \times 15 + I_{24V} \times 24$ (W)

The total of the power consumption values calculated for each block is the power consumption of the entire programmable controller system.

$$W = W_{PW} + W_{5V} + W_{24V} + W_{OUT} + W_{IN} + W_S \text{ (W)}$$

According to the calculated power consumption (W), calculate the heating value and a rise in ambient temperature inside the panel.
The outline of the calculation formula for a rise in ambient temperature inside the panel is shown below.

$$T = \frac{W}{UA} (^{\circ}C)$$

W : Power consumption of the entire programmable controller system (value obtained above)
A : Surface area inside the control panel [m^2]
U : When the ambient temperature inside the panel is uniformed by a fan.....6
When air inside the panel is not circulated.....4

Point

If the temperature inside the control panel is expected to exceed the specified range, it is recommended to install a heat exchanger to the panel to lower the temperature.
If a normal ventilating fan is used, dust will be sucked into the programmable controller together with the external air, and it may affect the performance of the programmable controller.

(7) Example of calculation of average power consumption

(a) System configuration

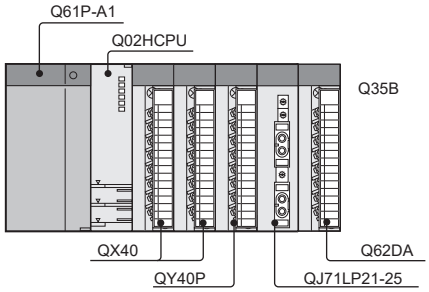

(b) 5VDC/24VDC current consumption of each module

Module model name	5VDC	24VDC
Q02HCPU	0.64A	----
QX40	0.05A	----
QY40P	0.065A	0.01A
QJ71LP-25	0.55A	----
Q62DA	0.33A	0.12A
Q35B	0.11A	----

(c) Power consumption of power supply module

W_{PW} = 3/7 × (0.64 + 0.05 + 0.05 + 0.065 + 0.55 + 0.33 + 0.11) × 5 = 3.85 (W)

(d) Total power consumption for 5VDC logic circuits of all module

W_{5V} = (0.64 + 0.05 + 0.05 + 0.065 + 0.55+ 0.33 + 0.11) × 5 = 8.98(W)

(e) Total of 24VDC average power consumption of the output module

W_{24V} = 0.01 × 24 × 1 = 0.24 (W)

(f) Average power consumption due to voltage drop in the output section of the output module

W_{OUT} = 0.1 × 0.2 × 16 × 1 = 0.32 (W)

(g) Average power consumption of the input section of the input module

W_{IN} = 0.004 × 24 × 32 × 1 = 3.07 (W)

(h) Power consumption of the external power supply section of the intelligent function module

W_S = 0.12 × 24 = 2.88 (W)

(i) Power consumption of overall system

W = 3.85 + 8.98 + 0.24 + 0.32 + 3.07 + 2.88 = 19.34 (W)

Point

The value of the heat generated in a redundant system (when the Redundant CPU is used) is the sum of the two values for the control and standby systems, each of which is calculated by the same method as that for the single system.

Appendix 11 Precautions for Battery Transportation

When transporting lithium batteries, follow the transportation regulations.

(1) Regulated models

The batteries for the CPU module (including memory cards) are classified as shown below.

Product name	Model	Product supply status	Classification for transportation
Battery	Q8BAT	Lithium battery (assembled battery)	Dangerous goods
	Q8BAT-SET	Lithium battery (assembled battery) + Q8BAT connection cable	
	Q7BATN, Q7BAT	Lithium battery	
	Q7BATN-SET, Q7BAT-SET	Lithium battery with holder	
	Q6BAT	Lithium battery	
SRAM card battery	Q2MEM-BAT Q3MEM-BAT	Lithium coin battery	Non-dangerous goods
Memory card	Q2MEM-1MBSN, Q2MEM-1MBS Q2MEM-2MBSN, Q2MEM-2MBS	Packed with lithium coin battery (Q2MEM-BAT)	
	Q3MEM-4MBS Q3MEM-8MBS	Packed with lithium coin battery (Q3MEM-BAT)	
	Q3MEM-4MBS-SET Q3MEM- 8MBS-SET	Packed with lithium coin battery (Q3MEM-BAT) + Memory card protective cover	

(2) Transport guidelines

Comply with IATA Dangerous Goods Regulations, IMDG code and the local transport regulations when transporting products after unpacking or repacking, while Mitsubishi ships products with packages to comply with the transport regulations.

Also, consult with the shipping carrier.

Appendix 12 Handling of Batteries and Devices with Built-in Batteries in EU Member States

This section describes the precautions for disposing of waste batteries in EU member states and exporting batteries and/or devices with built-in batteries to EU member states.

Appendix 12.1 Disposal precautions

In EU member states, there is a separate collection system for waste batteries. Dispose of batteries properly at the local community waste collection/recycling center.

The symbol shown below is printed on the batteries and packaging of batteries and devices with built-in batteries used for Mitsubishi Electric programmable controllers.



Note: This symbol mark is specified in the EU Battery Regulation ((EU) 2023/1542) Article 13 "Labelling and marking of batteries" and Annex VI.

The symbol indicates that batteries need to be disposed of separately from other wastes.

Appendix 12.2 Exportation precautions

The EU Battery Regulation ((EU) 2023/1542) requires the following when marketing or exporting batteries and/or devices with built-in batteries to EU member states.

- To print the symbol marks (A) and (B) on batteries (if it is not possible, print them on the manuals and packaging.)
- To explain the symbol mark (A) in the manuals of the products

Note that the printing and explanation of the symbol mark (A) remain mandatory from the EU Battery Directive (2006/66/EC).

(A) (B)



(1) Labeling

To comply with the EU Battery Regulation ((EU) 2023/1542), print the symbol marks (A) and (B) on the batteries or the manuals and packaging. (Applicable from August 18, 2024*1)

*1 To market or export batteries and/or devices with built-in batteries before August 18, 2024, print the symbol mark (A) on the batteries or packaging to comply with the EU Battery Directive (2006/66/EC).

(2) Explaining the symbol in the manuals

To export devices incorporating Mitsubishi programmable controller to EU member states after August 18, 2024, provide the latest Mitsubishi programmable controller manuals that include the explanation of the symbol mark (A). If the manuals are not provided or the manuals do not include the explanation of the symbol mark (A), separately attach an explanatory note regarding the symbol mark (A) to each manual of the devices.

Point

The requirements apply to even batteries and/or devices with built-in batteries manufactured before the enforcement date of the EU Battery Directive (2006/66/EC) and EU Battery Regulation ((EU) 2023/1542).

Appendix 13 Type Approval Certificates for Ship Classifications

MELSEC-Q series programmable controllers have acquired Type Approval Certificates from classification societies. Therefore, these programmable controllers can be used for machinery or devices for marine and offshore applications. For information on the models that have been approved by the classification societies, please consult your local Mitsubishi representative.

(1) Classification societies that issue the Type Approval Certificates

MELSEC-Q series have acquired the Type Approval Certificates from the following classification societies:

- American Bureau of Shipping (Abbreviation: ABS)
- Bureau Veritas (Abbreviation: BV)
- DNV AS (Abbreviation: DNV)
- Lloyd's Register of Shipping (Abbreviation: LR)
- Nippon Kaiji Kyokai (Abbreviation: NK)
- Registro Italiano Navale (Abbreviation: RINA)

(2) Precautions for using the MELSEC iQ-R series programmable controller as the approved system

- The programmable controller must be installed in a control panel.
- Use a shielded cable for a cable coming out of the control panel.
- Make sure to attach a noise filter to the power cable.
- Make sure to attach ferrite cores to all cables that are extended out of control panels, including power cables.

For details, refer to the following.

Precautions to Acquire the Type Approval Certificate for Ship Classifications of ABS, BV, DNV, LR, NK, and RINA (For MELSEC-Q Series) (FA-A-0053)

Appendix 14 External Dimensions

Appendix 14.1 CPU modules

(1) Q00JCPU

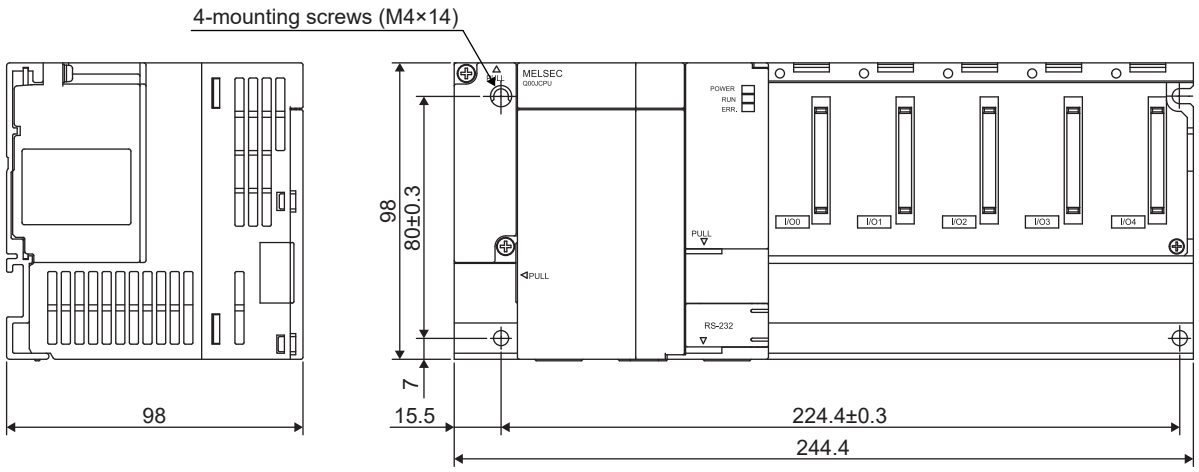

Unit: mm

(2) Q00UJCPU

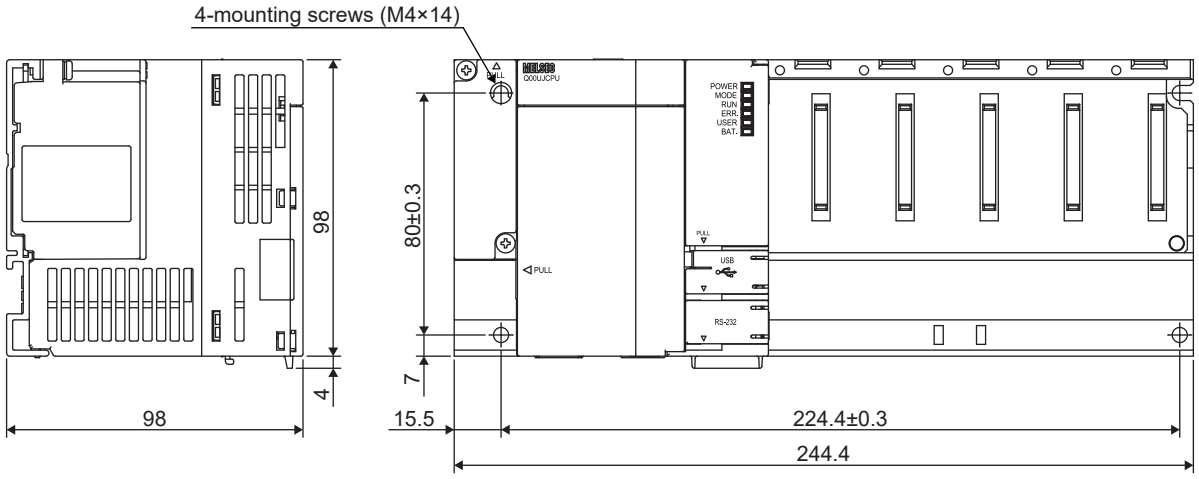

Unit: mm

(3) Q00CPU, Q01CPU, Q00UCPU, Q01UCPU, Q02UCPU, Q03UDCPU, Q04UDHCPU, Q06UDHCPU, Q10UDHCPU, Q13UDHCPU, Q20UDHCPU, Q26UDHCPU

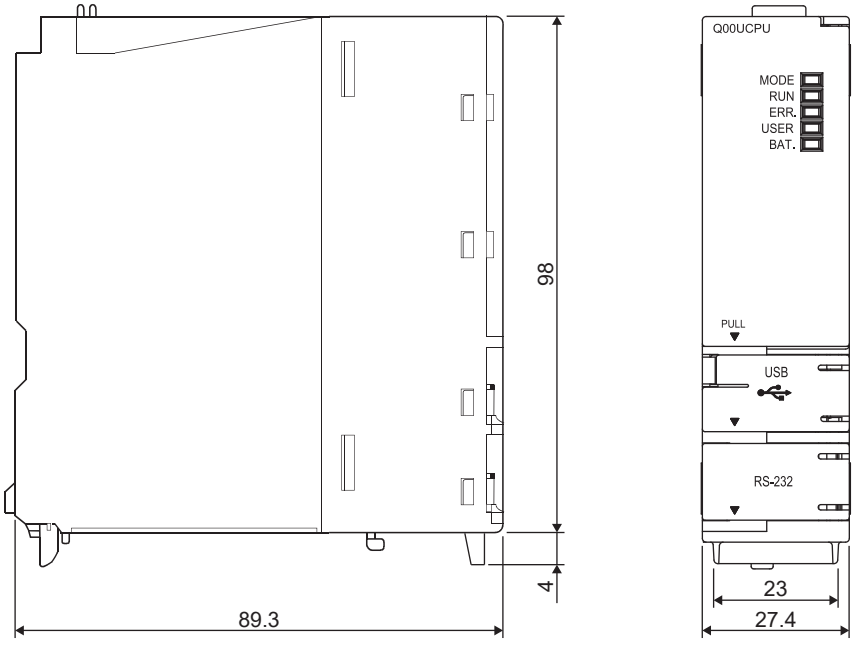

Unit: mm

(4) Q02CPU, Q02HCPU, Q06HCPU, Q12HCPU, Q25HCPU

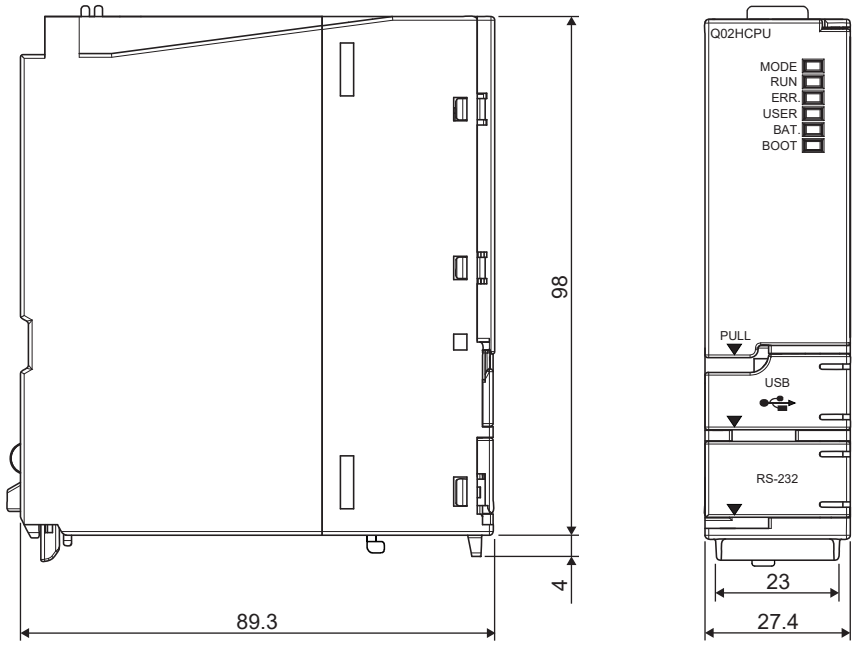

Unit: mm

(5) Q02PHCPU, Q06PHCPU, Q12PHCPU, Q25PHCPU

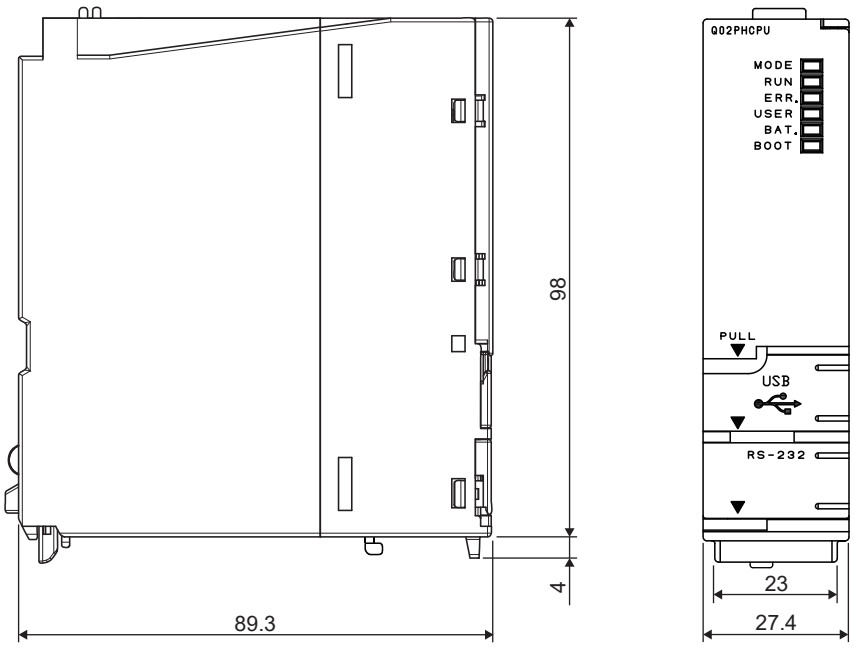

Unit: mm

(6) Q03UDVCPU, Q04UDVCPU, Q04UDPVCPU, Q06UDVCPU, Q06UDPVCPU, Q13UDVCPU, Q13UDPVCPU, Q26UDVCPU, Q26UDPVCPU

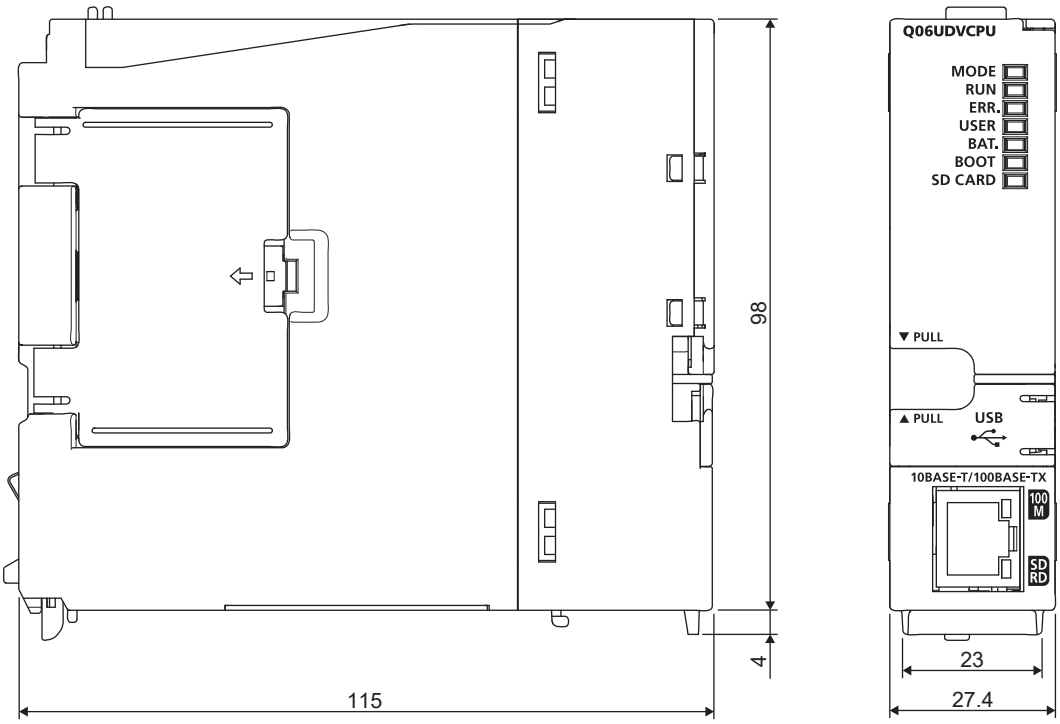

Unit: mm

(7) Q03UDECPU, Q04UDEHCPU, Q06UDEHCPU, Q10UDEHCPU, Q13UDEHCPU, Q20UDEHCPU, Q26UDEHCPU, Q50UDEHCPU, Q100UDEHCPU

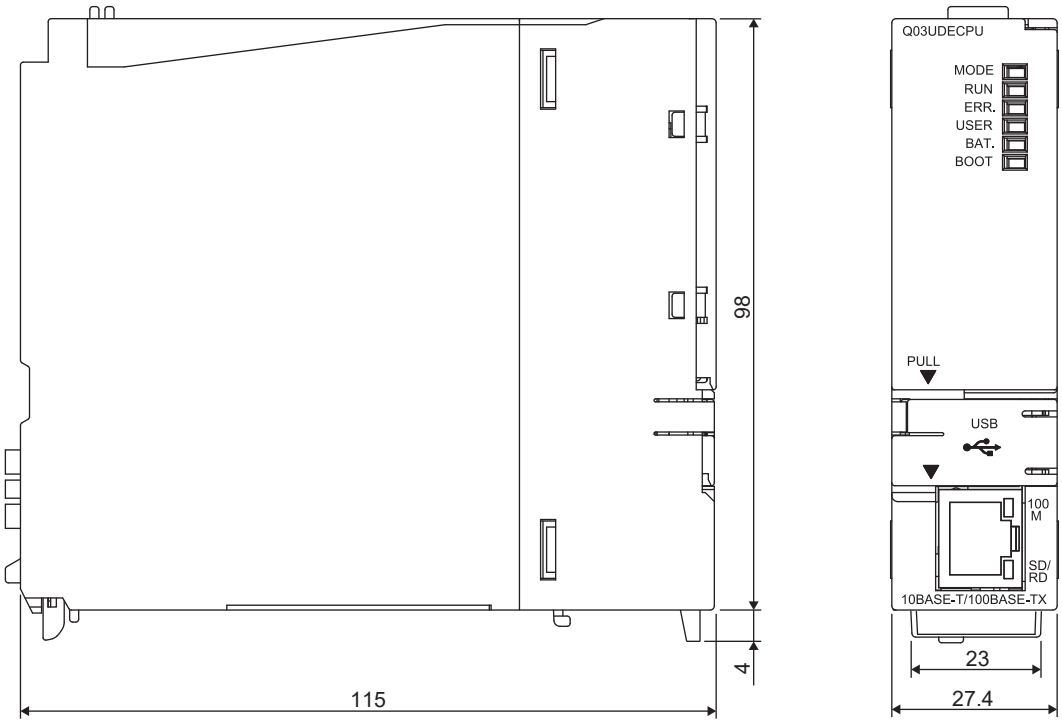

Unit: mm

(8) Q12PRHCPU, Q25PRHCPU

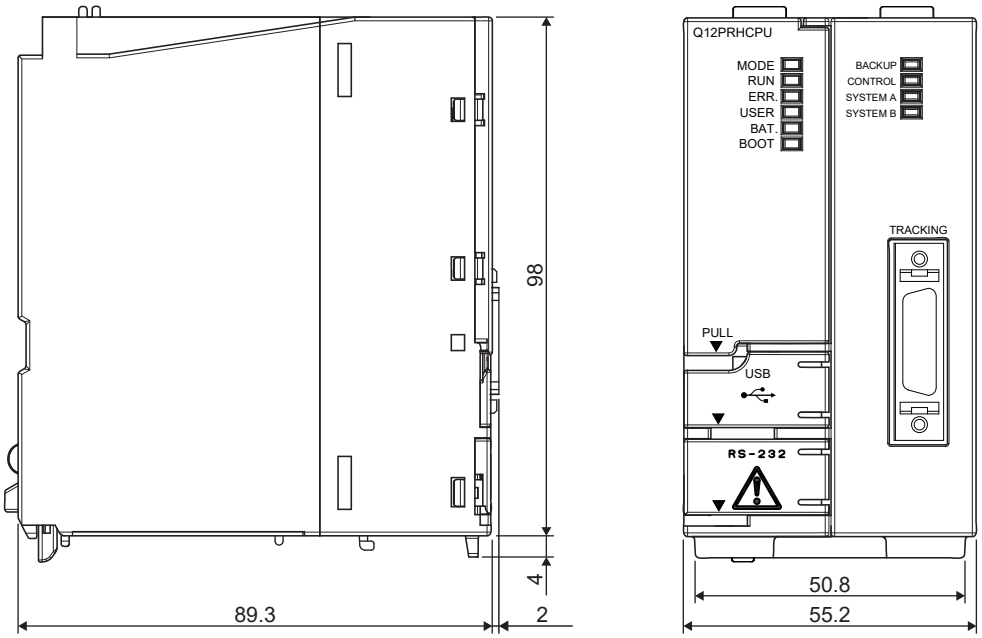

Unit: mm

(9) When the Q3MEM-4MBS or Q3MEM-8MBS is mounted on the CPU module

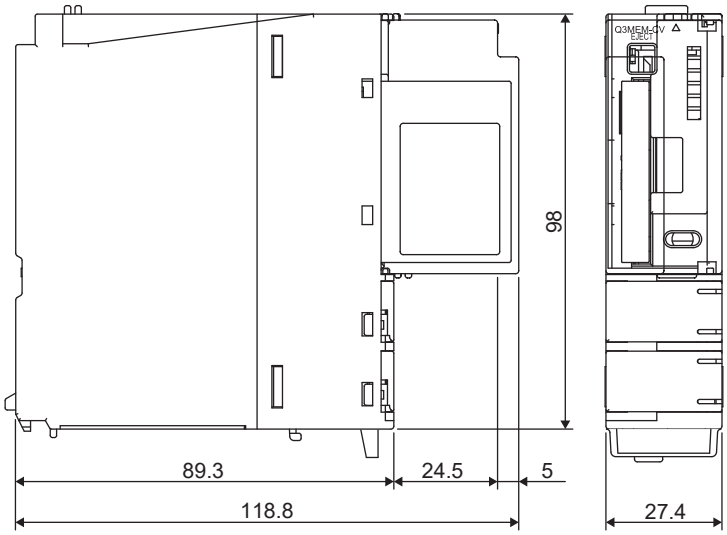

Unit: mm

(10)When the Q7BATN-SET is mounted on the CPU module

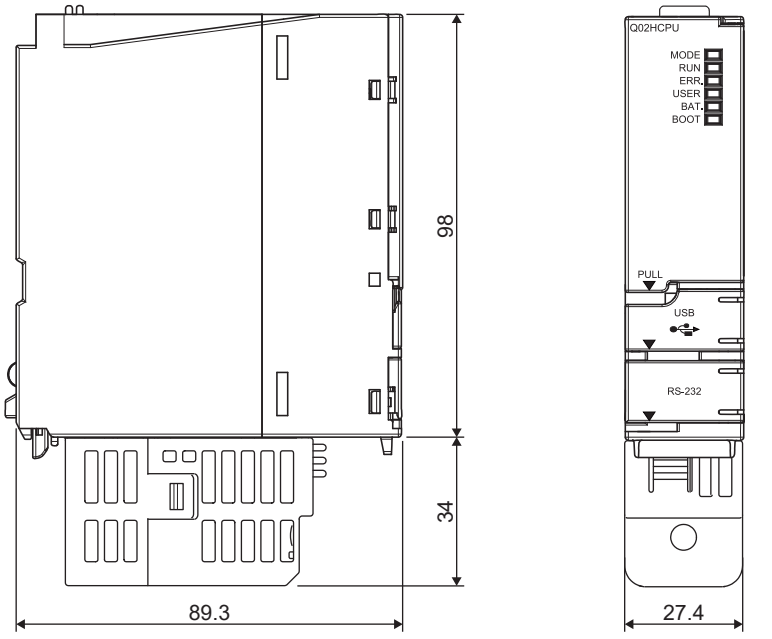

Unit: mm

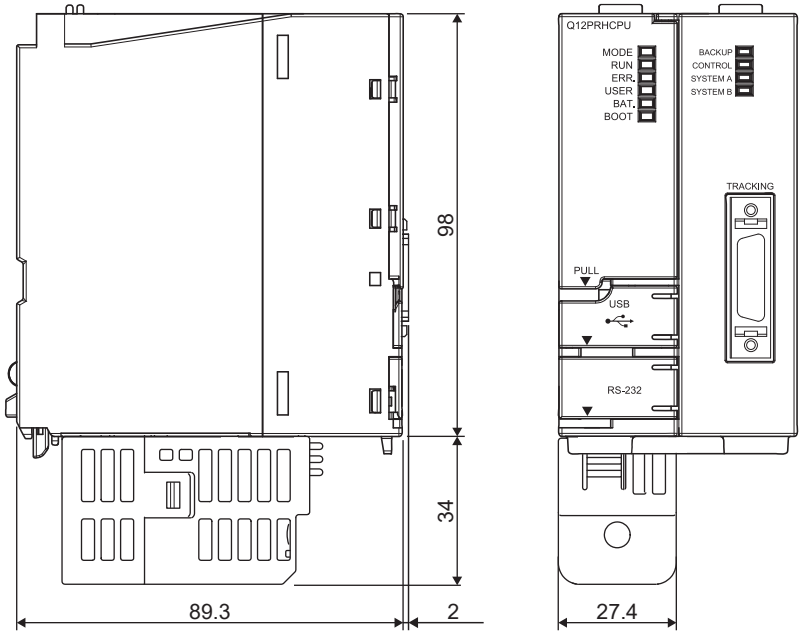

Unit: mm

(11)When the Q7BAT-SET is mounted on the CPU module

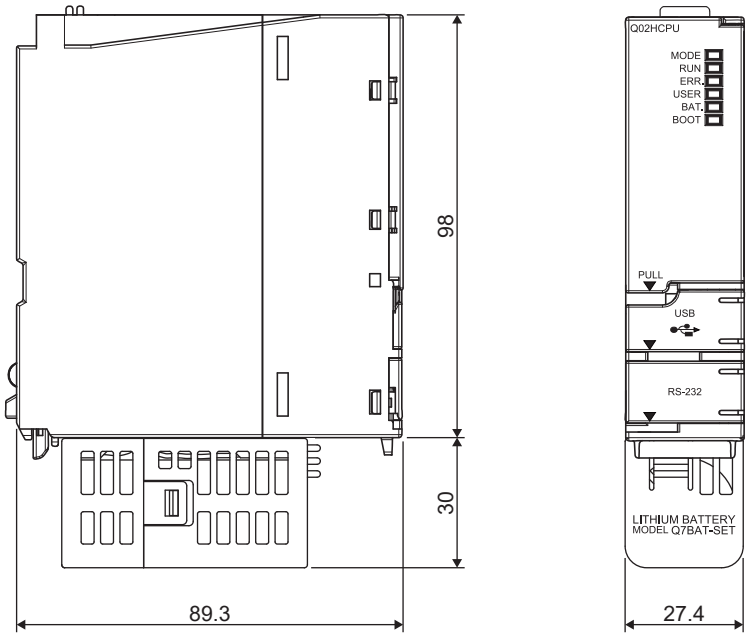

Unit: mm

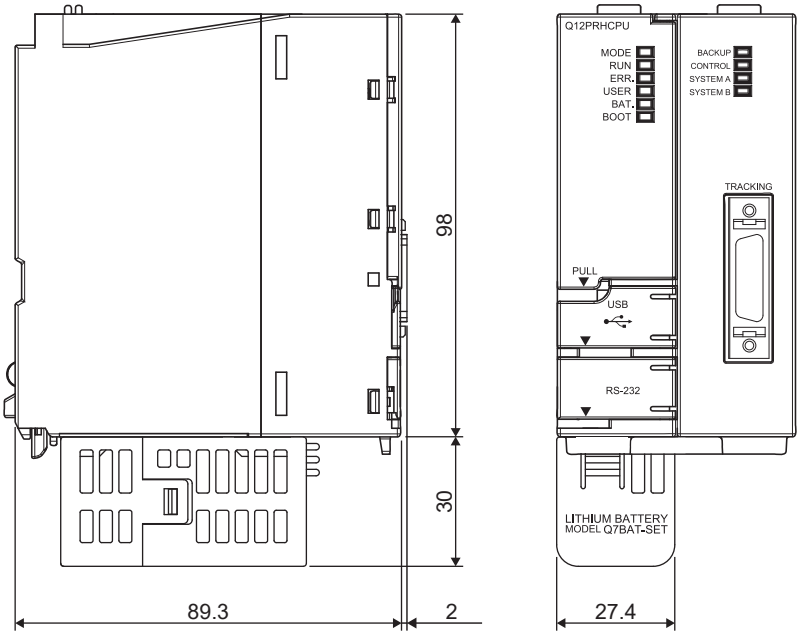

Unit: mm

Appendix 14.2 Power supply modules

(1) Q61P-A1, Q61P-A2, Q61P, Q61P-D, Q62P, Q63P

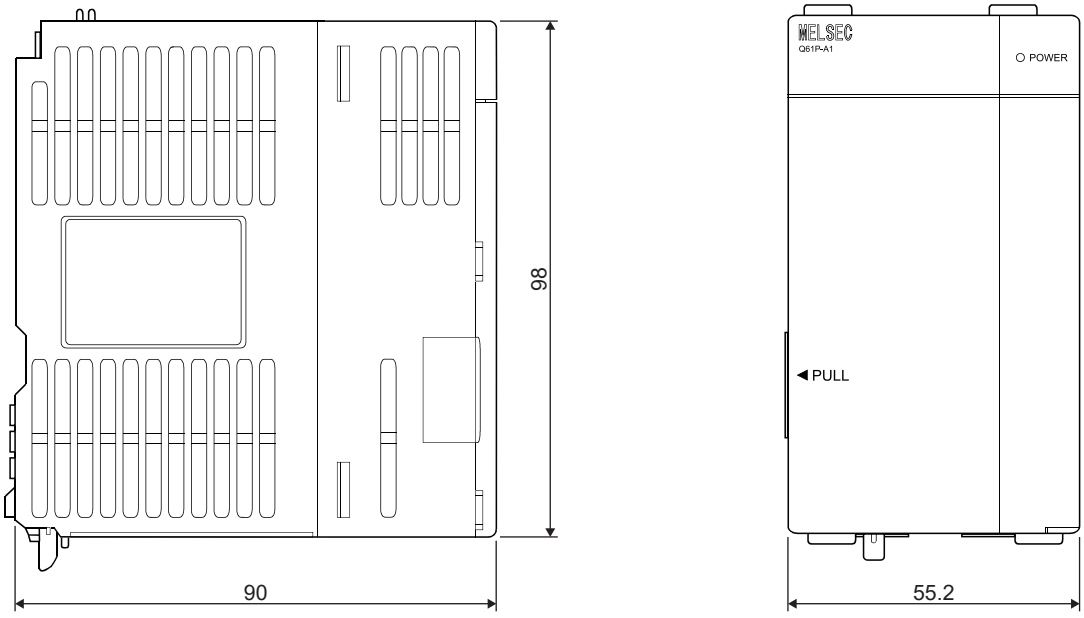

Unit: mm

(2) Q64P

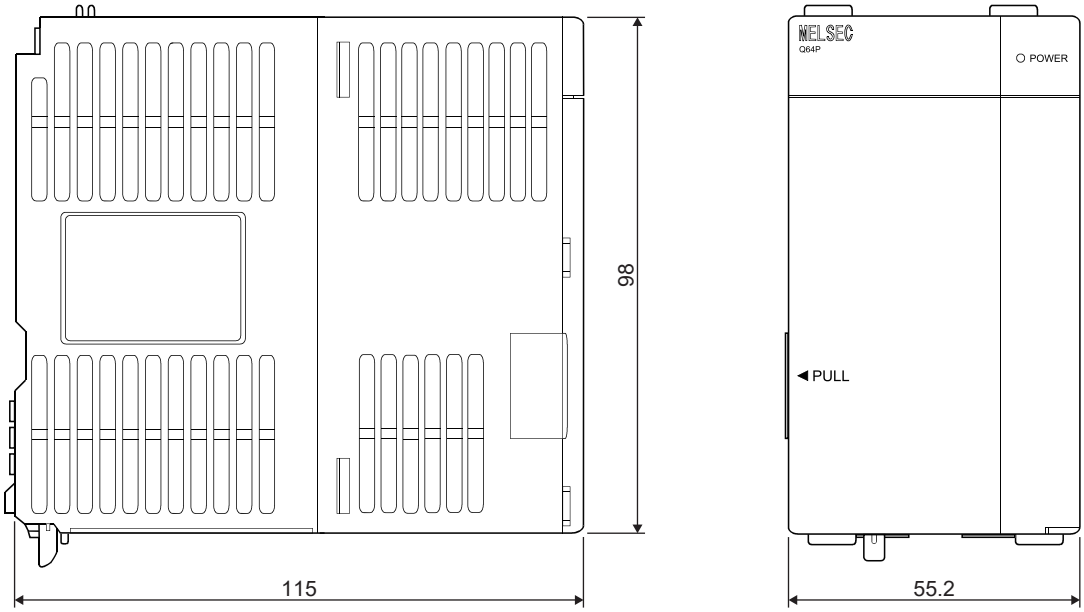

Unit: mm

(3) Q64PN

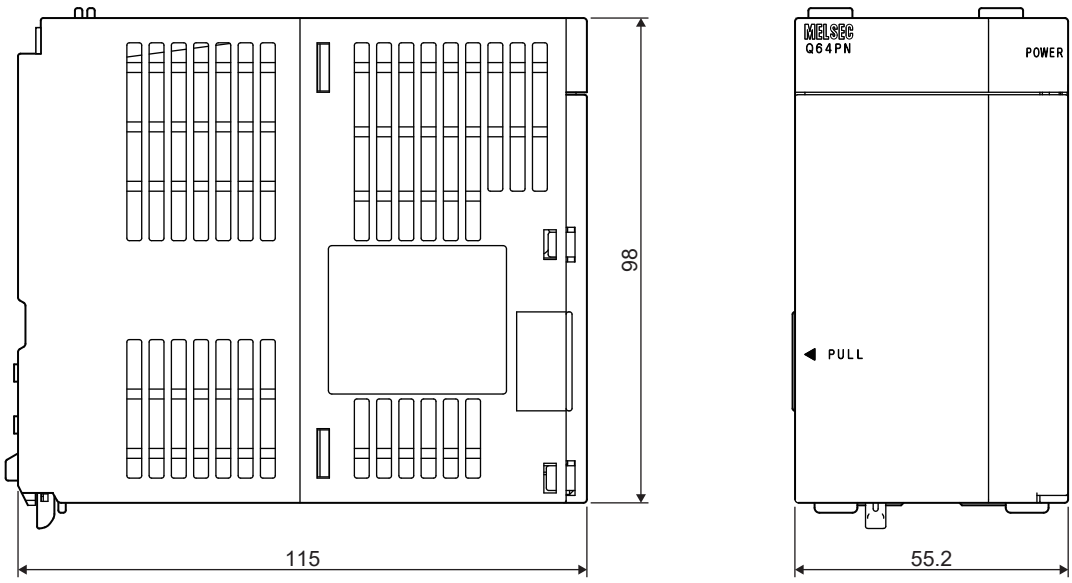

Unit: mm

(4) Q61SP

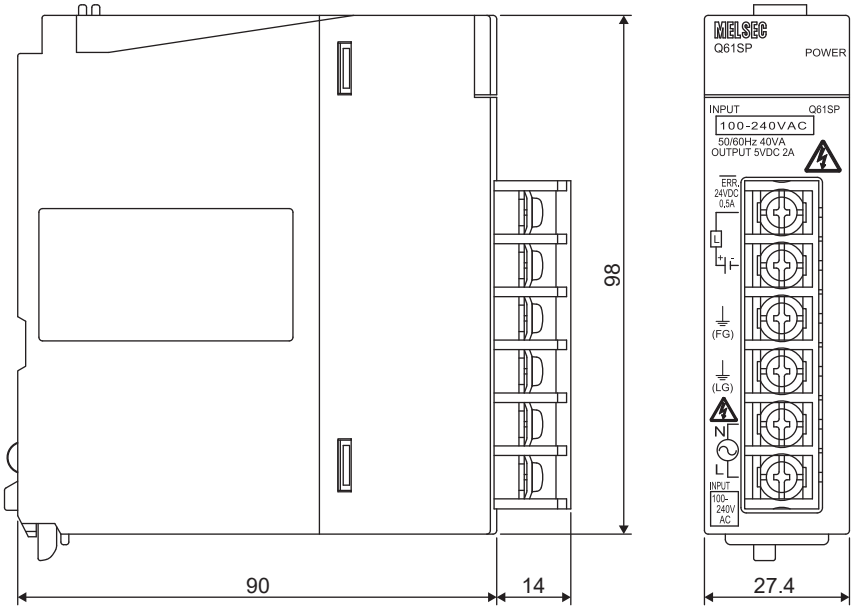

Unit: mm

(5) Q63RP

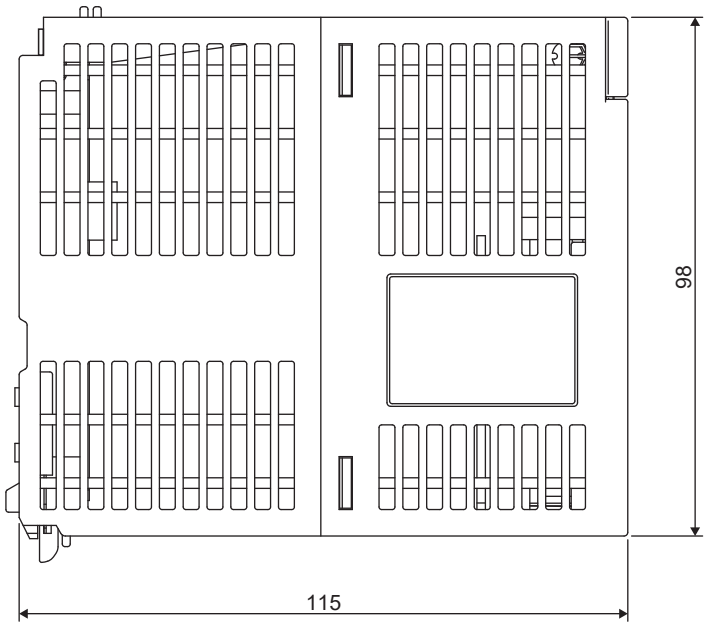

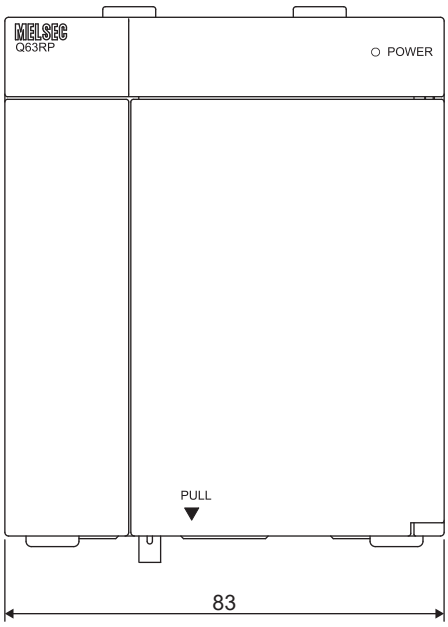

Unit: mm

(6) Q64RPN, Q64RP

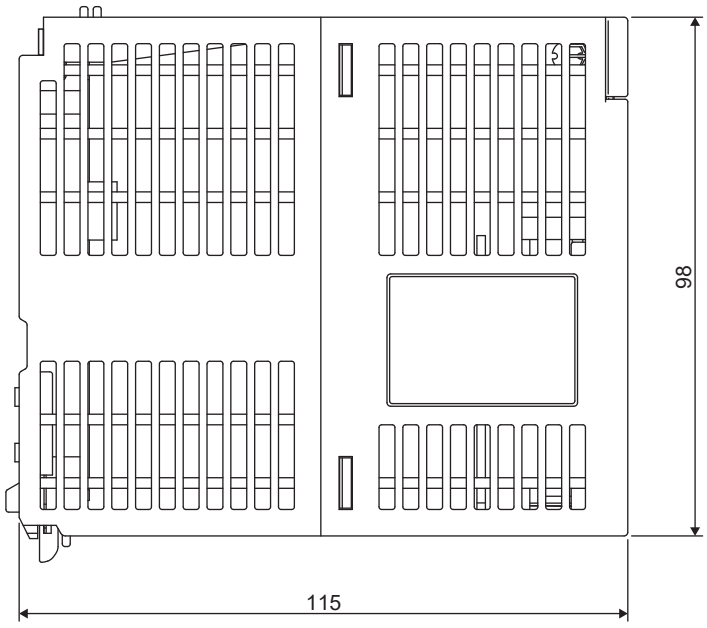

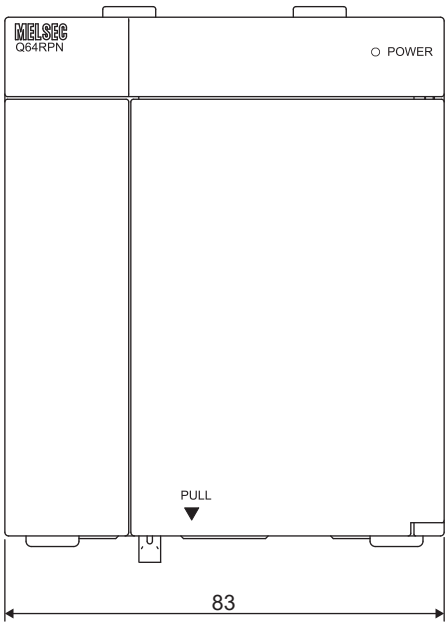

Unit: mm

(7) A1S61PN, A1S62PN, A1S63P

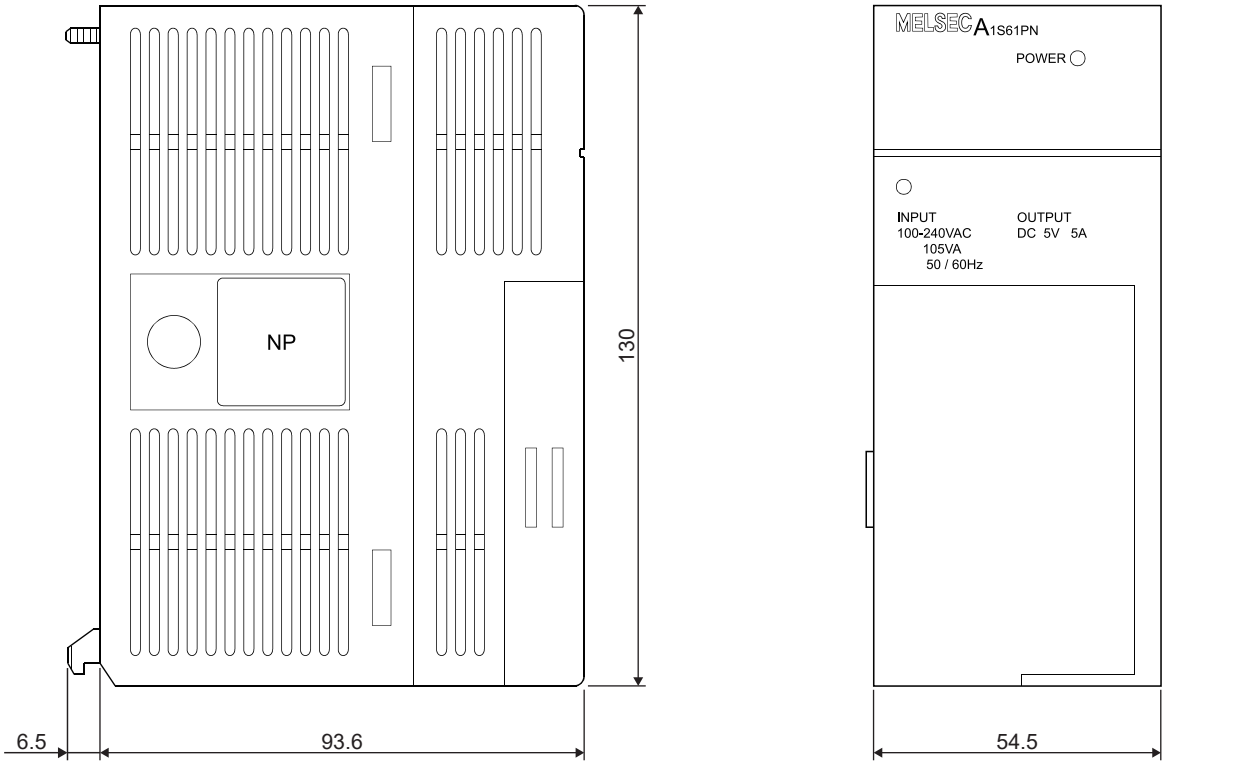

Unit: mm

Appendix 14.3 Main base units

(1) Q33B

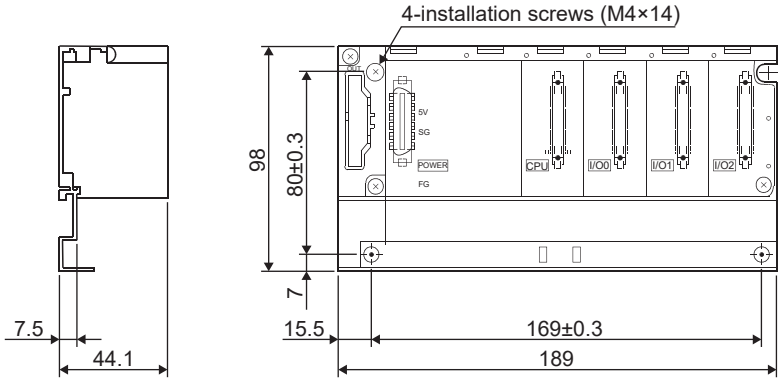

Unit: mm

(2) Q35B

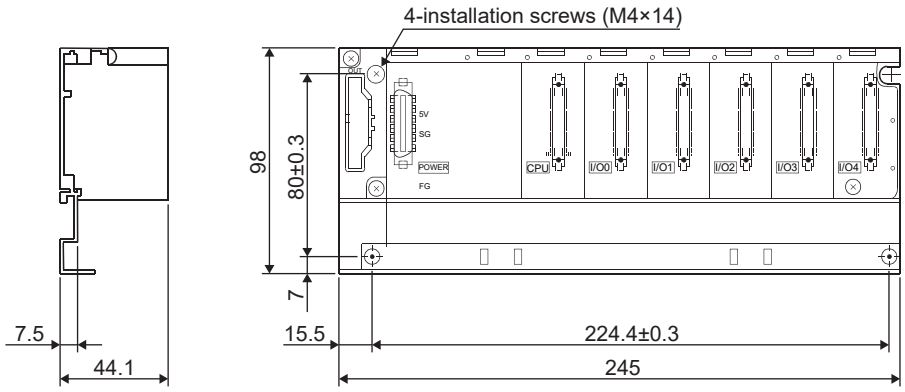

Unit: mm

(3) Q38B

(a) With 5 base unit installation holes

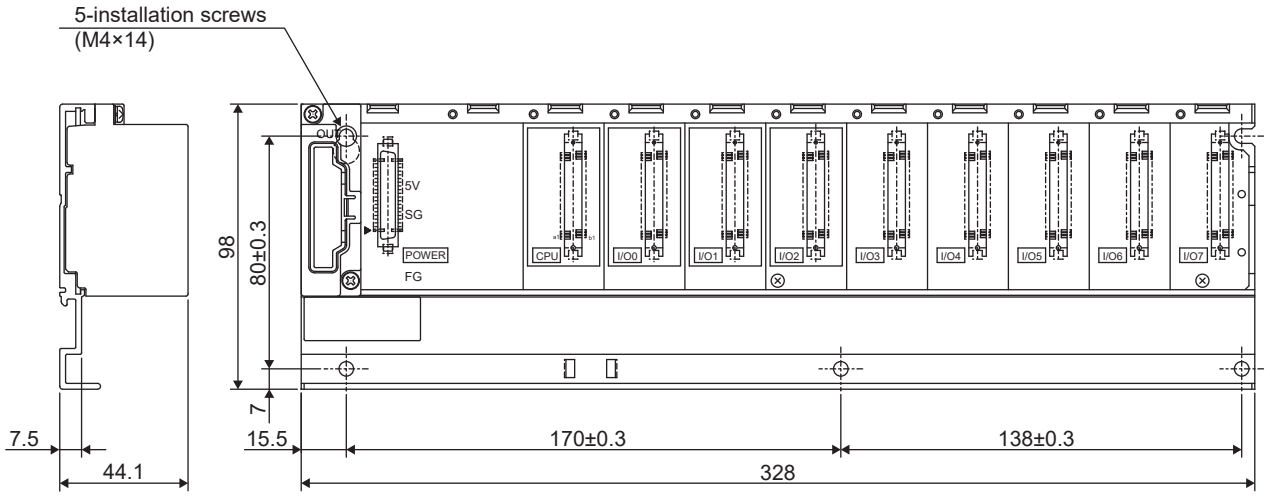

Unit: mm

(b) With 4 base unit installation holes

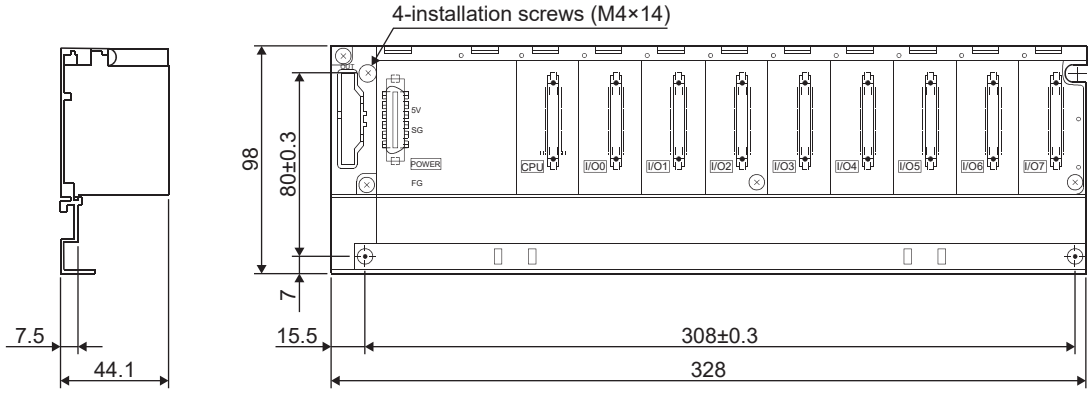

Unit: mm

(4) Q312B

(a) With 5 base unit installation holes

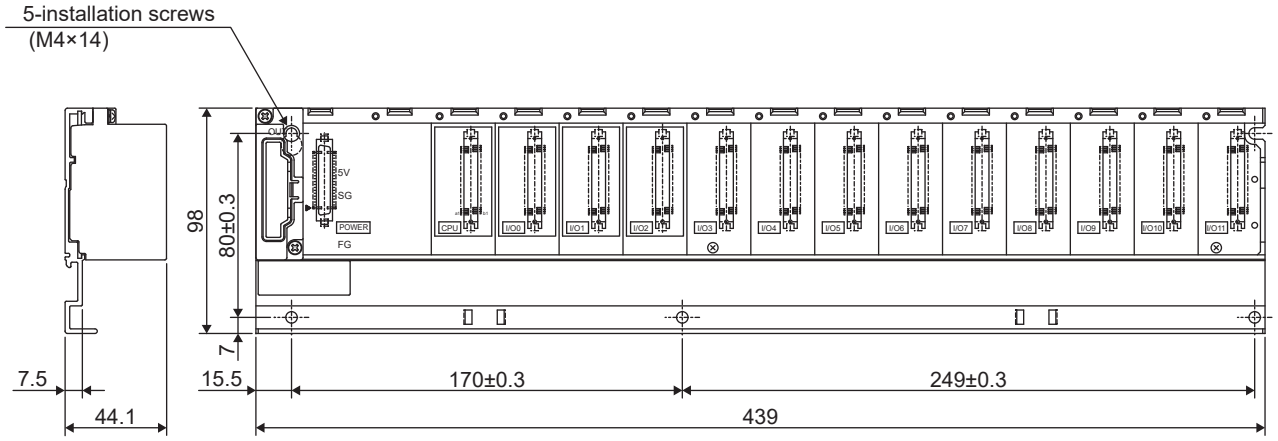

Unit: mm

(b) With 4 base unit installation holes

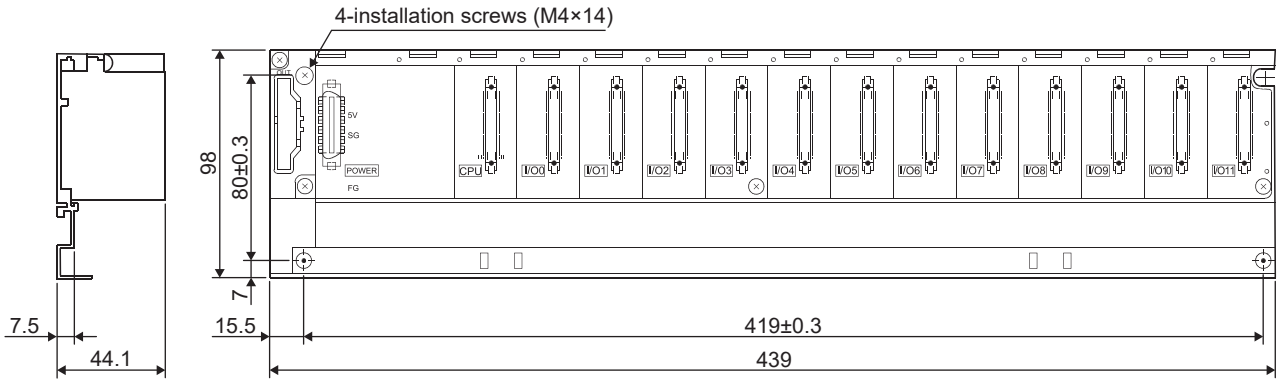

Unit: mm

Remark

The Q38B and Q312B manufactured in August 2006 or later have five base mounting holes.

(5) Q32SB

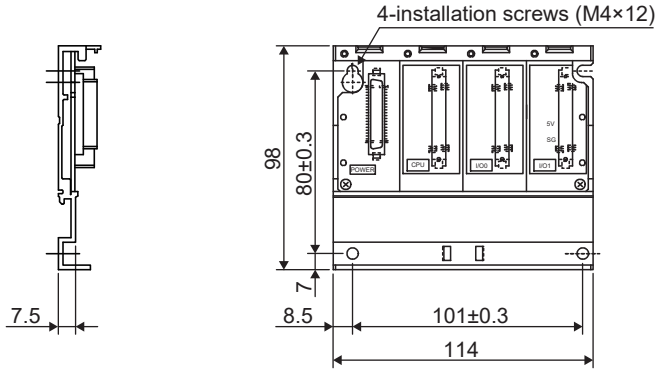

Unit: mm

(6) Q33SB

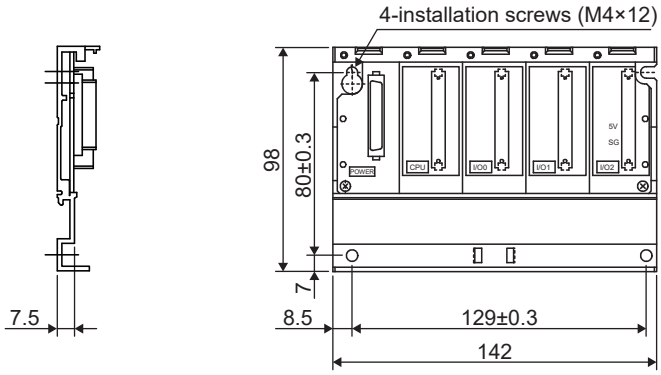

Unit: mm

(7) Q35SB

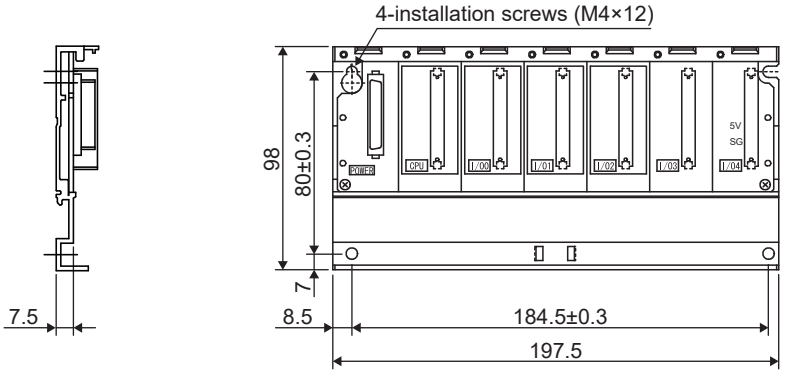

Unit: mm

(8) Q38RB

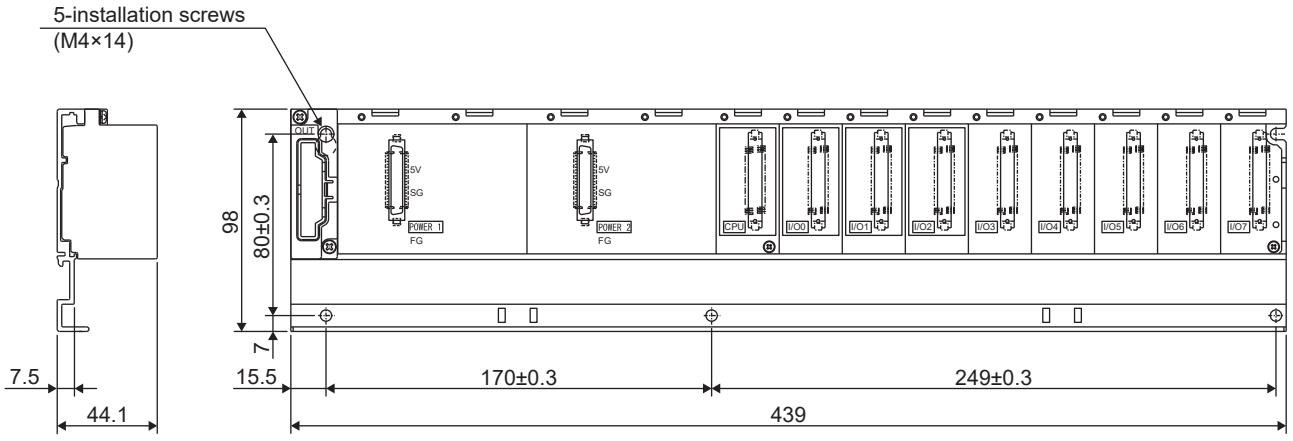

Unit: mm

(9) Q35DB

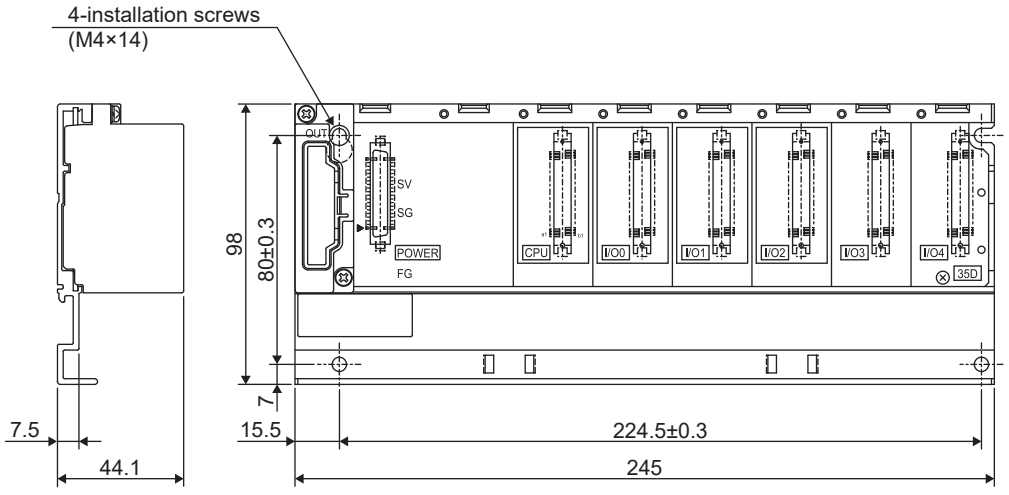

Unit: mm

(10)Q38DB

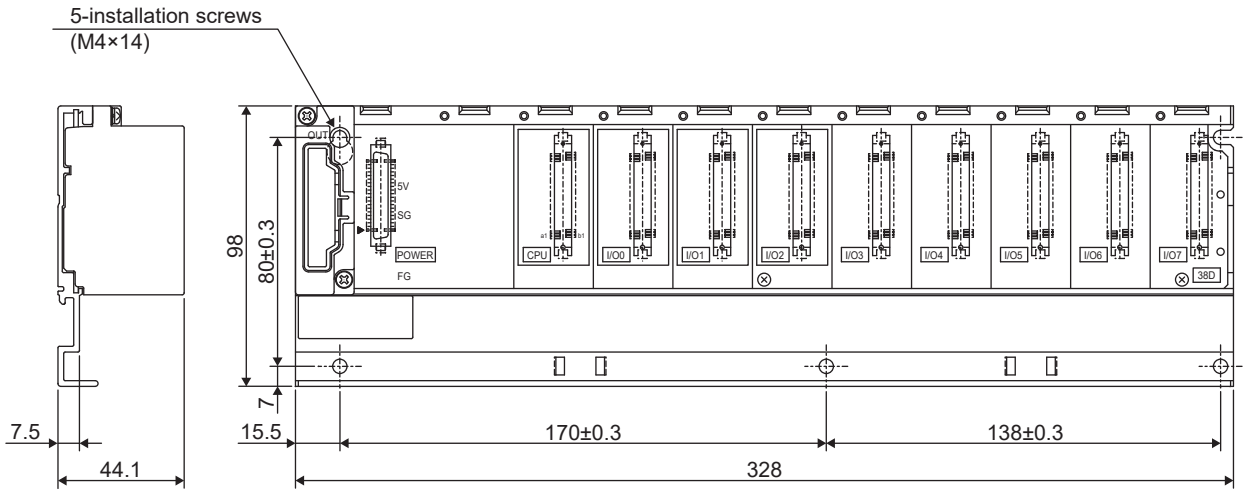

Unit: mm

(11)Q312DB

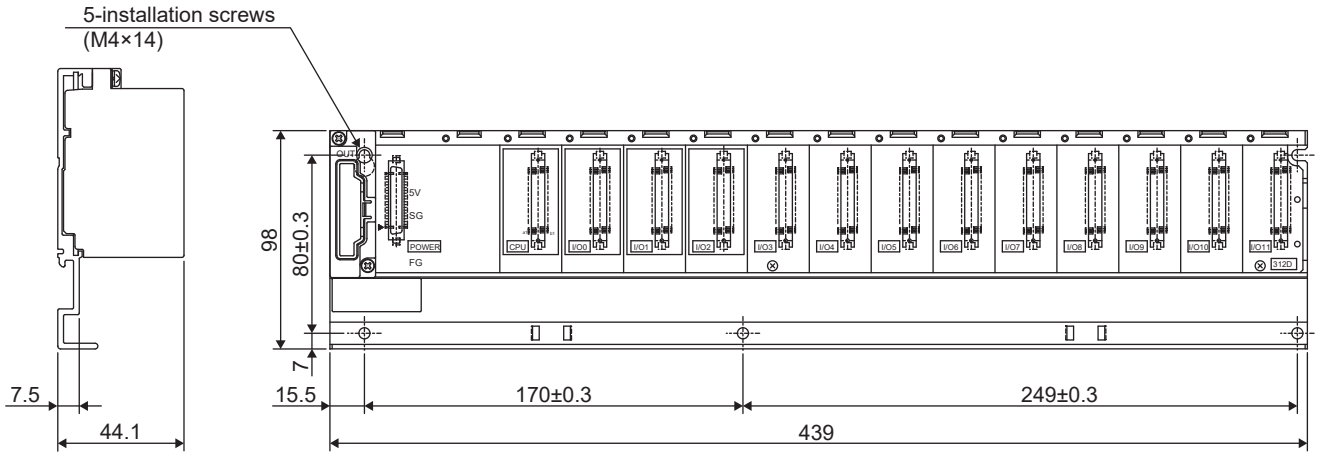

Unit: mm

Appendix 14.4 Extension base units

(1) Q52B

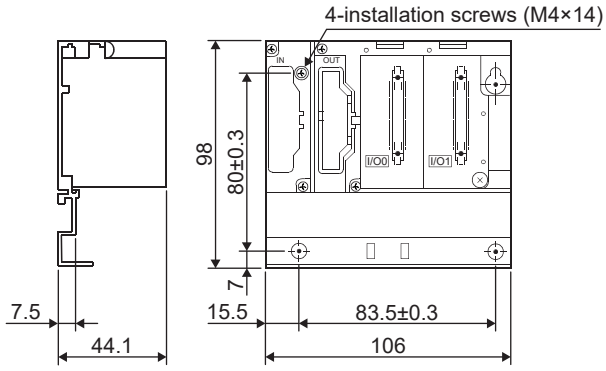

Unit: mm

(2) Q55B

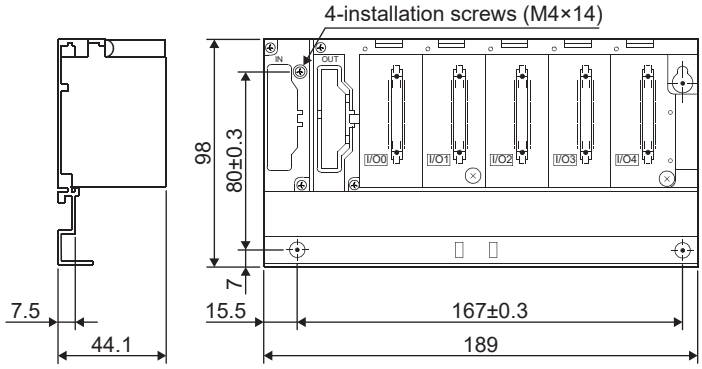

Unit: mm

(3) Q63B

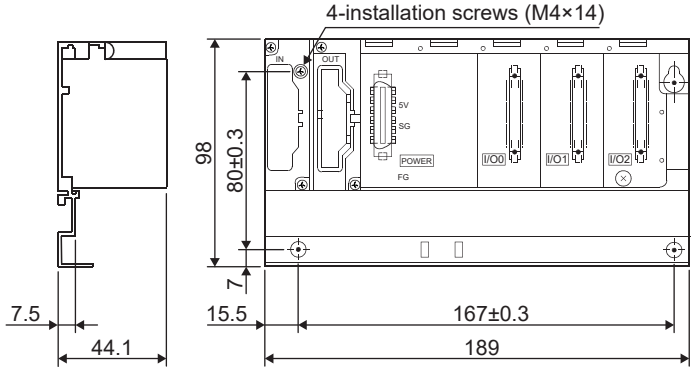

Unit: mm

(4) Q65B

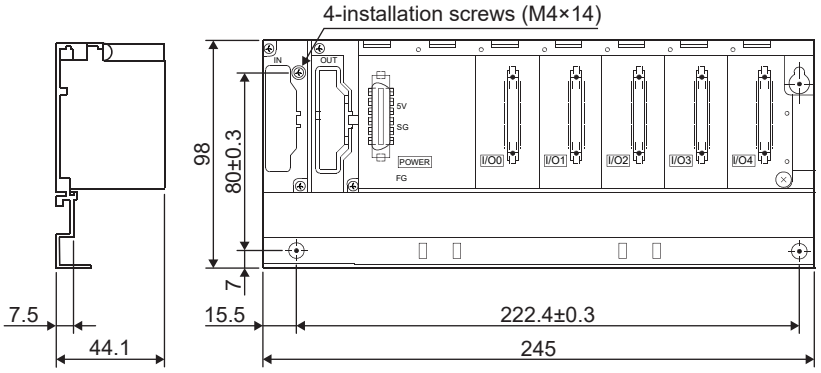

Unit: mm

(5) Q68B

(a) With 5 base unit installation holes

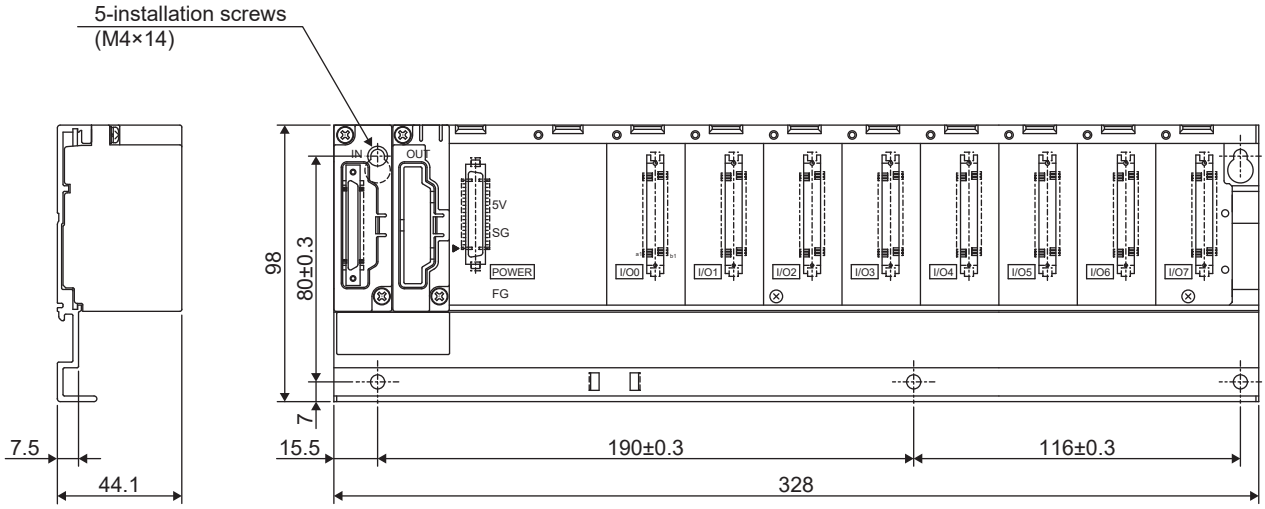

Unit: mm

(b) With 4 base unit installation holes

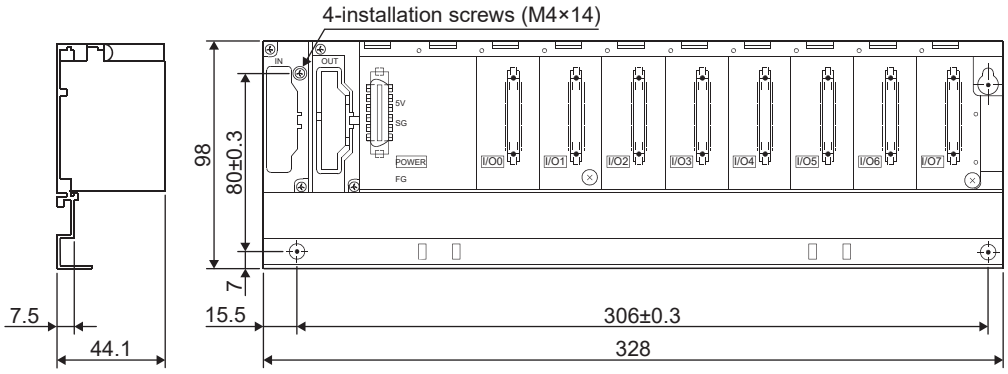

Unit: mm

(6) Q612B

(a) With 5 base unit installation holes

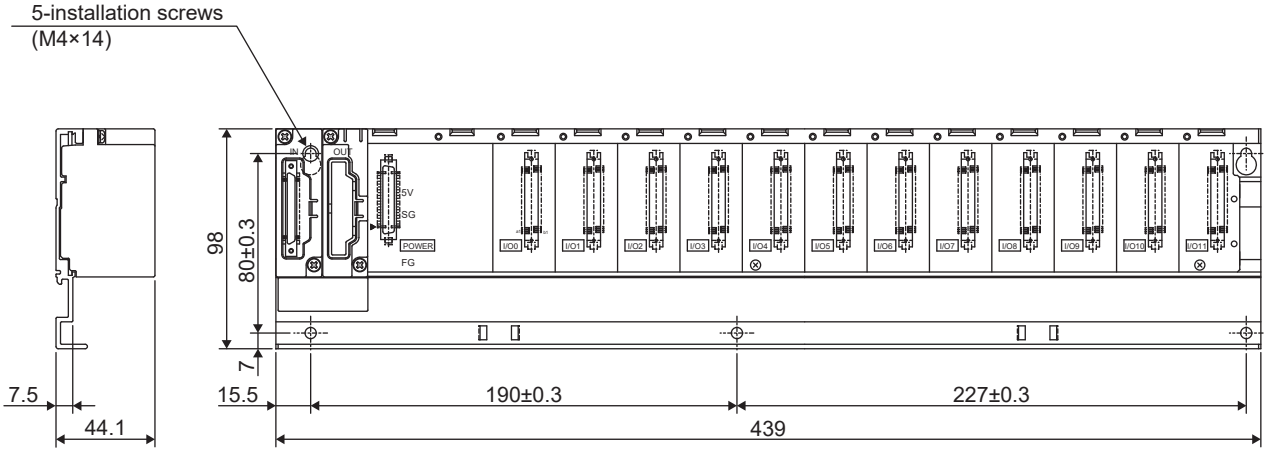

Unit: mm

(b) With 4 base unit installation holes

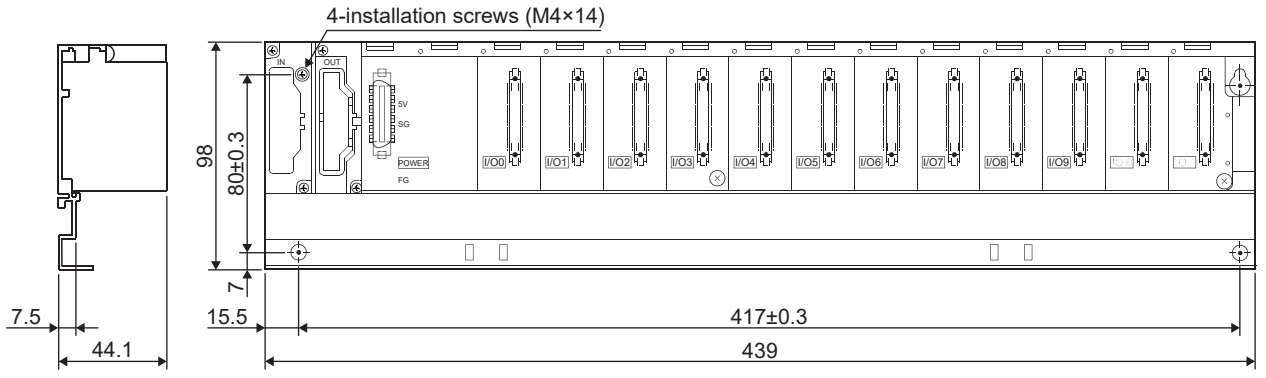

Unit: mm

Remark

The Q68B and Q612B manufactured in August 2006 or later have five base mounting holes.

(7) QA1S51B

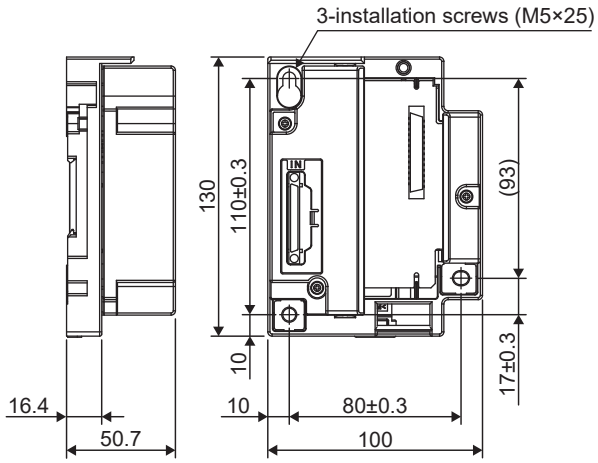

Unit: mm

(8) QA1S65B

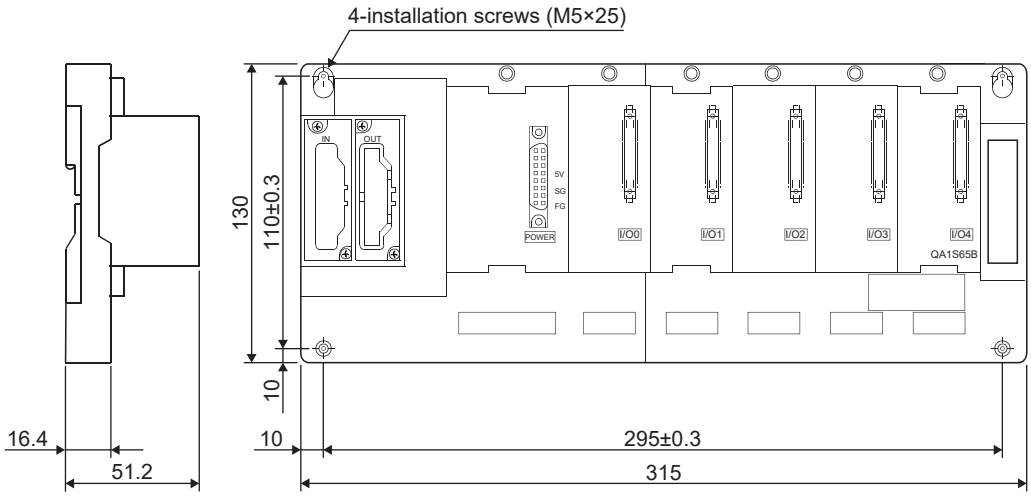

Unit: mm

(9) QA1S68B

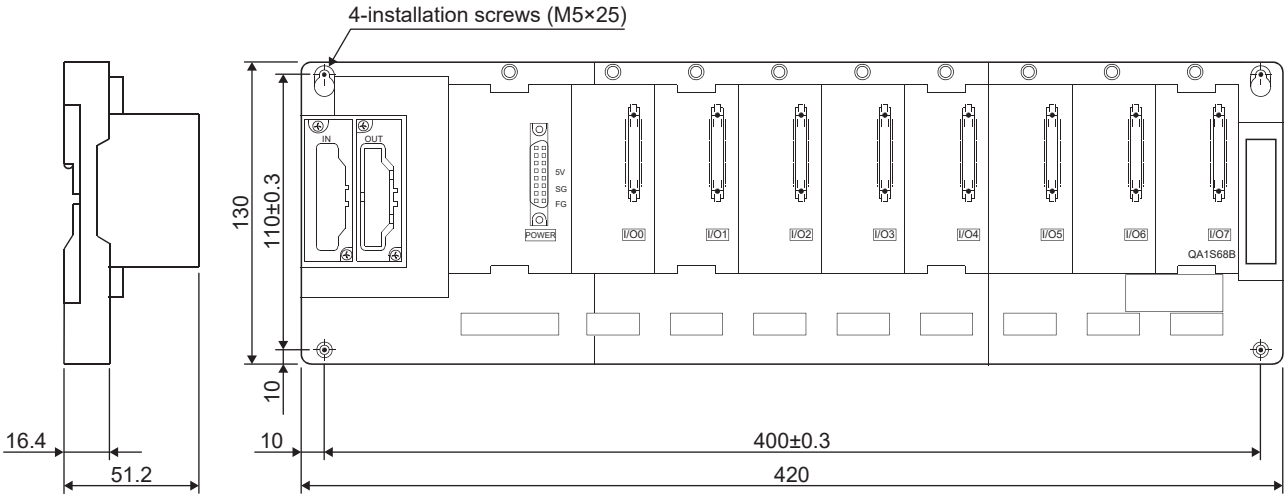

Unit: mm

(10)QA65B

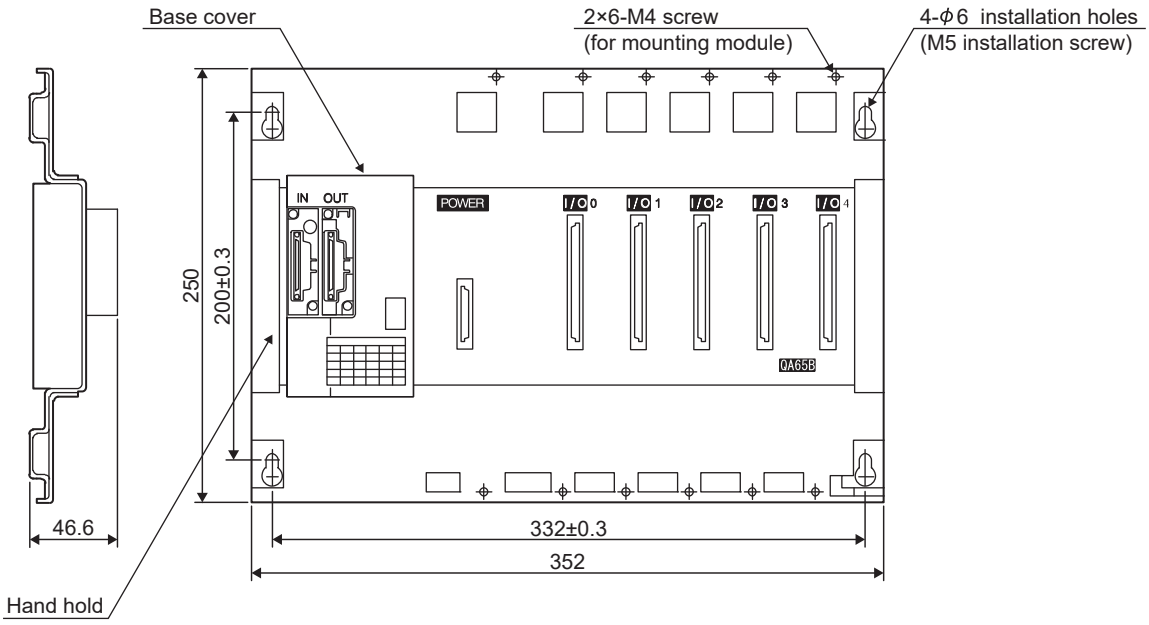

Unit: mm

(11) QA68B

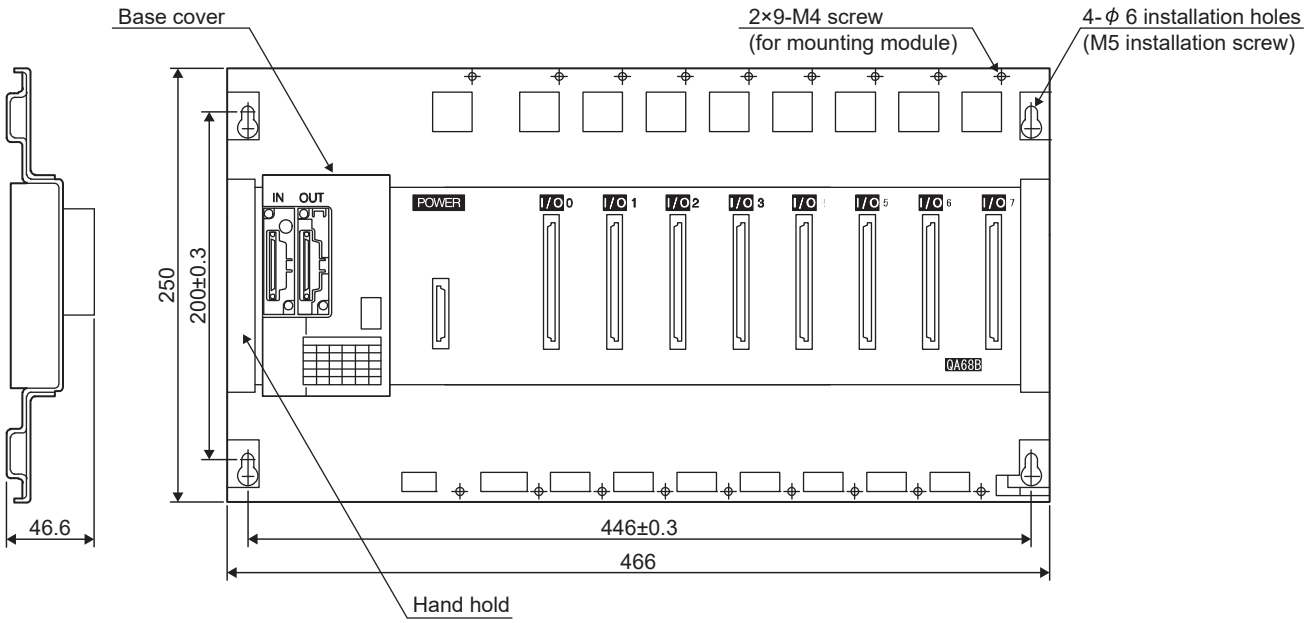

Unit: mm

(12) Q68RB

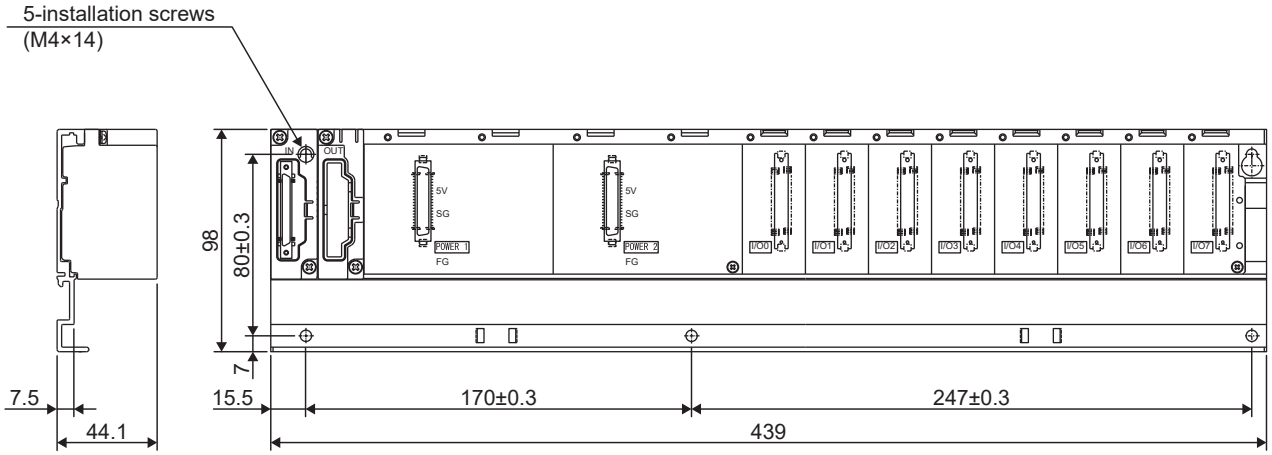

Unit: mm

(13) Q65WRB

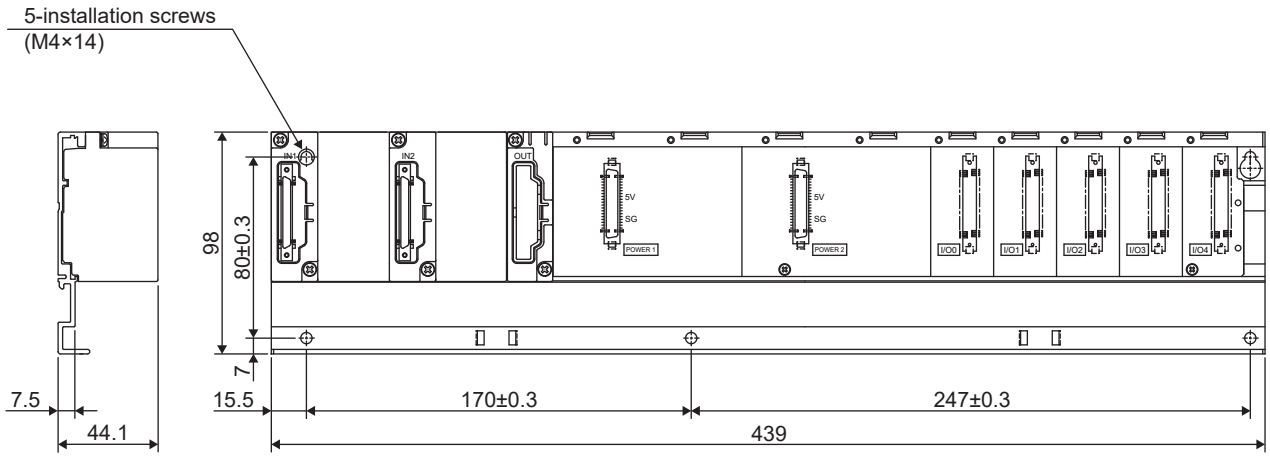

Unit: mm

Appendix 14.5 Other optional items

(1) Extension cables

QC05B, QC06B, QC12B, QC30B, QC50B, QC100B

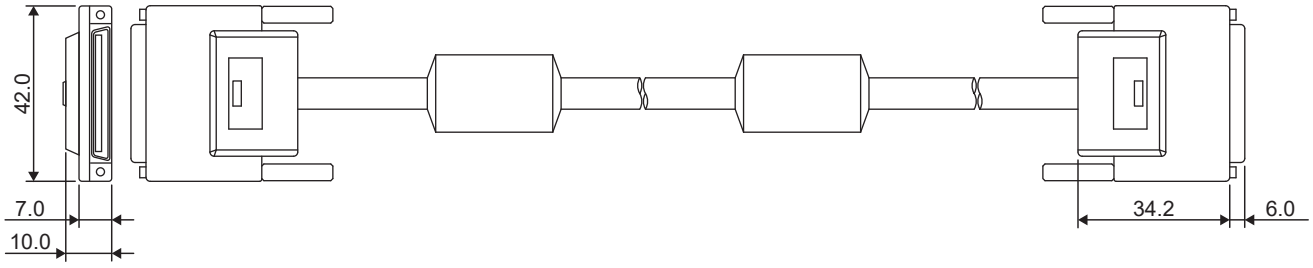

Unit: mm

(2) Tracking cable

QC10TR, QC30TR

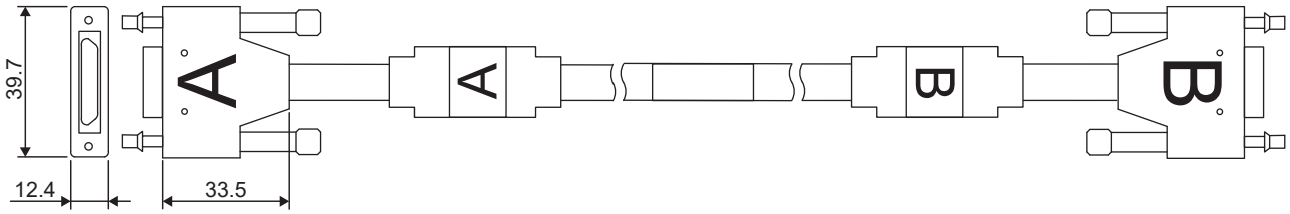

Unit: mm

(3) Q8BAT-SET

Q8BAT

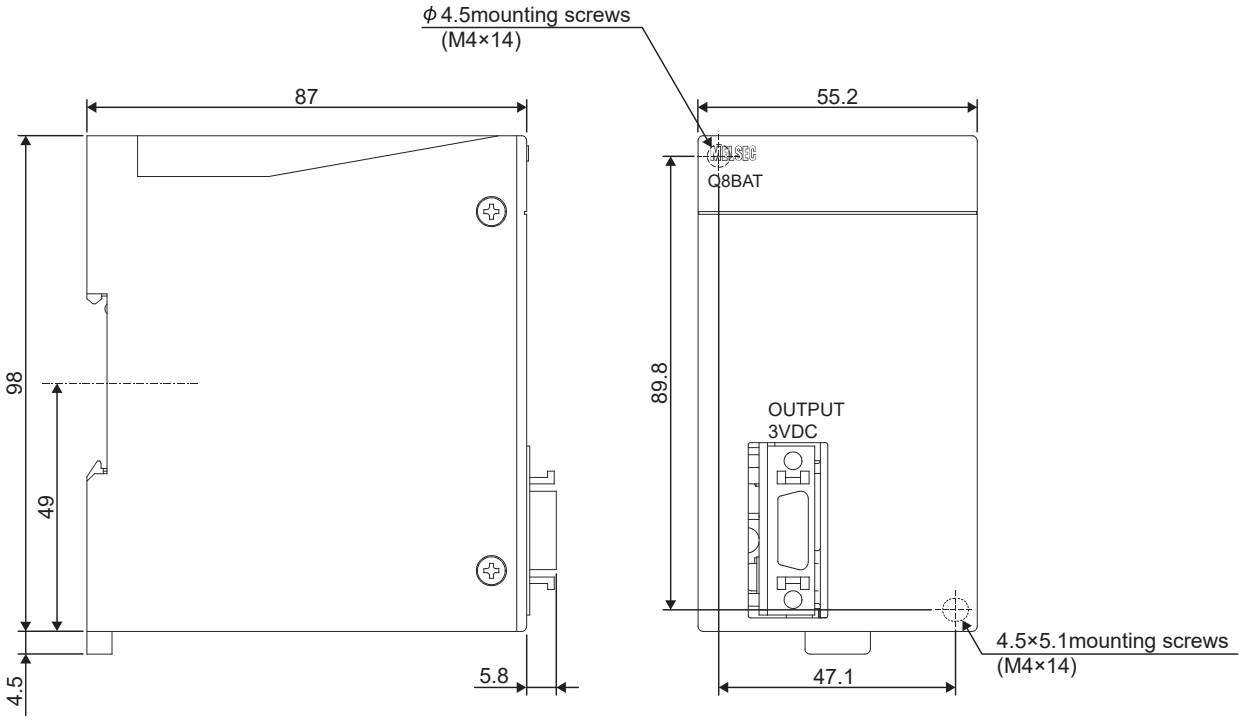

Unit: mm

QC10BAT

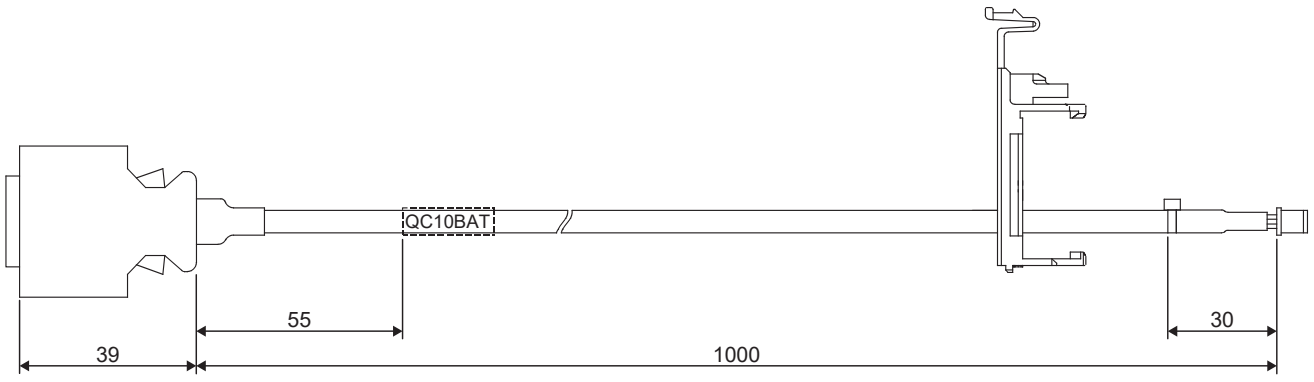

Unit: mm

Memo

INDEX

0 to 9

5VDC internal current consumption 149

A

A series power supply module 22
A5□B 22
A6□B 22
Allowable momentary power failure time 149
Annunciator [F] 148
AnS series power supply module 22
ATA card 252
Automatic write to the standard ROM 201

B

Backup mode 130
Base unit
  Extension 22
  Extension stages 242
  External dimensions 715
  Installation and removal of module 73
  Main 22
  Mounting dimensions 61
  Mounting orientation 62
  Mounting position 61
  Multiple CPU high speed main 22
  Redundant 22
  Redundant power extension 22
  Redundant power main 22
  Redundant power supply 22
  Redundant type extension 22
  Slim type main 22
Basic model QCPU 21
Battery
  Battery for QCPU 264
  Battery for SRAM card 255
  Life 623
  Replacement procedure (CPU module) 271
  Replacement procedure (SRAM card) 277
  Replacement reference period 623
Boot operation 202

C

Calculating heat generation 697
Category II 691
CE mark 673
Circuit
  Fail-safe circuit 696
  System design circuit 694
Clock function 149
Constant scan 147
Control method 147
Control system 130
Counter [C] 148
CPU module
  External dimensions 704
  Installation and removal 73
  Specifications 147
CPU shared memory 147

D

Daily inspection 269
Data register [D] 148
Debug mode 130
Device
  Annunciator [F] 148
  Counter [C] 148
  Data register [D] 148
  Edge relay [V] 148
  File register [R, ZR] 148
  Function input [FX] 149
  Function output [FY] 149
  Function register [FD] 149
  Index register [Z] 149
  Intelligent function module device 149
  Internal relay [M] 148
  Interrupt pointer [I] 149
  Latch relay [L] 148
  Link direct device 149
  Link register [W] 148
  Link relay [B] 148
  Link special register [SW] 148
  Link special relay [SB] 148
  Pointer [P] 149
  Retentive timer [ST] 148
  Special register [SD] 149
  Special relay [SM] 149
  Step relay [S] 149
  Timer [T] 148
DIN rail
  Applicable DIN rail 67
  DIN rail adapter type 247
  DIN rail mounting screw intervals 68
Drive 147

E

Edge relay [V] 148
Ethernet 23
Extended scan time 147
Extended SRAM cassette 23,262
Extension
  Base unit 22
  Cable 23
Extension base unit 22
External dimensions
  CPU module 704
  Extension base unit 721
  Extension cable 728
  Main base unit 715
  Power supply module 711
  Tracking cable 728

F

Fail-safe
Circuit 694
Measures 696
Features 26
Ferrite core 688
File register [R, ZR] 148
Flash card 252
Forcibly Disabling the SD Memory Card 261
Function input [FX] 149
Function output [FY] 149
Function register [FD] 149
Function version 653

G

GOT 23
GX Developer 23

H

High Performance model QCPU 21
High-speed Universal model QCPU 21

I

I/O control mode 147
Index register [Z] 149
Installation environment 60
Installing and Removing an Extended SRAM Cassette 103
Installing and Removing an SD Memory Card 101
Intelligent function module
Intelligent function module device 149
Intelligent function module parameter 148
Internal current consumption 149
Internal relay [M] 148
Interrupt pointer [I] 149
Isolation transformer 689

L

Latch clear operation 200
Latch range 149
Latch relay [L] 148
LED
LEDs 122
Link direct device 149
Link register [W] 148
Link relay [B] 148
Link special register [SW] 148
Link special relay [SB] 148
Low Voltage directive 673

M

Main base unit 22
Max. number of files stored 148
MC protocol 23
MELSECNET/H 23
Memory capacity 147
Memory Card
Battery Installation into the Memory Card 257
Handling 256
List of usable memory cards 252
Loading/unloading procedures 97
Part names 251
Specifications 253
Specifications of the battery 255
Memory size 150
Module
Installation 73
Removal 75
Module change
Online 281
Redundant power supply module 291
Multiple CPU high speed main base unit 22

N

Network module 39
No. of device points 148
No. of device tracking words 149
No. of I/O device points 148
No. of I/O points 148
Noise filter 688

O

Online module change 281
Operation mode change 129

P

Part name
Base units 239
Basic model QCPU 121
High Performance model QCPU, Process CPU and Redundant CPU 127
Memory card 251
Power supply module 204
Universal model QCPU 132
Periodic inspection 270
Pointer [P] 149
Power supply module
A series 22
AnS series 22
Connecting to the power supply module 107
External dimensions 711
Life detection 22
Names of Parts and Settings 204
Q series 22
Redundant 22
Slim type 22
Specifications 212
Precaution
Connection of GOT 49
Design 1
Disposal 6
Installation 64
Precaution on installation 64
Precautions for battery transportation 700
Precautions for using coaxial cables 679
Startup and Maintenance 5
System configuration 39

When only the Q5□B is connected to the extension base unit 90
Wiring precautions 105
Process control language 147
Process CPU 21
Processing speed 147
Program capacity 147
Program language 147
Program size 154

Q

Q series power supply module 22
Q3□B 22
Q3□DB 22
Q3□RB 22
Q3□SB 22
Q5□B 22
Q6BAT 264
Q6□B 22
Q6□RB 22
Q6□WRB 22
Q7BAT 264
Q7BATN 264
Q7BATN-SET 266
Q7BAT-SET 266
Q8BAT 264
Q8BAT-SET 267
QA1S5□B 22
QA1S6ADP 23
QA1S6ADP+A1S5□B/A1S6□B 22
QA1S6□B 22
QA6ADP 22
QA6ADP+A5□B/A6□B 22
QA6□B 22
QnUD(H)CPU 21

R

Redundant base unit 22
Redundant CPU 21
Redundant power extension base unit 22
Redundant power main base unit 22
Redundant power supply module 22
Redundant power supply system 108
Redundant system
Backup mode 130
Debug mode 130
Operation mode change 129
Separate mode 130
Redundant type extension base unit 22
Reinforced insulation 692
Reset operation 198
Retentive timer [ST] 148
RUN/PAUSE contact 149

S

SD memory card 23,259
Separate mode 130
Serial number 653
Single power supply system 107
Slim type main base unit 22
Slim type power supply module 22
Special register [SD] 149
Special relay [SM] 149
Specifications
Battery 264
Battery for memory card 255
General 119
Memory card 253
Performance 121
Power supply module 212
SRAM card 252
Standard RAM 147
Standard ROM 147
Standards
Low Voltage Directive 673
Standby system 130
Step relay [S] 149
System 694
Control system 130
Standby system 130
System A 131
System B 131
System A 131
System B 131
System configuration
Applicable software 655
Bus connection of GOT 48
Outline 50
Overall configuration 34
Peripheral device configuration 52
Precautions 39
Sequence control language 147
Single CPU 34
System switching 130

T

Timer [T] 148
Tracking cable 23
Tracking execution time 147
Troubleshooting
Basic measures 293

U

Universal model Process CPU 21
Universal model QCPU 21

W

Weight
Base unit 247
CPU module 149
Extension cable 89
Memory card 253
Power supply module 213,223
Wiring
Extension cables 87
I/O equipment 111
I/O module 111
Power supply module 107
Wiring of I/O module 111

REVISIONS

*The manual number is given on the bottom left of the back cover.

Revision Date	*Manual number	Description
Jun., 2004	SH(NA)-080483ENG-A	First edition
Dec., 2004	SH(NA)-080483ENG-B	Addition Section 12.2.21 Partial correction CONTENTS, Section 2.1.5, 5.2.1, 5.3, 9.1.2, 9.2.4, 10.3.1, 10.4, 10.5, 10.6.1, 11.1, 11.3.1, 11.3.2, 11.4, 11.5, 12.2.1, 12.3.1, 12.3, 12.6, 12.7, Appendix 2.1, Appendix 2.2, Appendix 3.1
May, 2005	SH(NA)-080483ENG-C	Addition Section 12.2.22, 12.2.23, 12.2.24, Appendix 2.4, Appendix 2.5 Partial correction GENERIC TERMS AND ABBREVIATIONS, Chapter 1, Section 2.1.1, 2.1.2, 2.1.5, 2.2, 4.1, 5.2.1, 5.2.2, 5.3, 6.1.4, 7.2.1, 7.2.2, 9.1.3, 10.2, 10.3.2, 10.6.2, 11.3.1, 11.3.2, 11.3.3, 11.3.4, 11.4, 11.5, 12.2.1, 12.2.2, 12.2.3, 12.2.5, 12.2.7, 12.3.2, 12.4.1, 12.4.2, 12.6, 12.7, Appendix 1.5, Appendix 2.2, Appendix 2.3, Appendix 3
Aug., 2005	SH(NA)-080483ENG-D	Partial correction SAFETY PRECAUTIONS, GENERIC TERMS AND ABBREVIATIONS, Section 2.1.1, 4.1, 5.1, 5.2.1, 5.2.2, 5.3, 7.1.2, 10.6.2, 11.3.3, 12.2.2, 12.3.1, 12.4.2, 12.6, 12.7, Appendix 1.2
Apr., 2006	SH(NA)-080483ENG-E	Model Addition QA65B,QA68B Partial correction GENERIC TERMS AND ABBREVIATIONS, Section 1.1, 2.1.1, 2.1.2, 5.1, 5.2.1, 5.2.3, 6.1.1, 6.1.2, 9.1.3, 9.1.5, 9.1.6, 10.3.1, 10.3.3, 12.3.2, Appendix 1.4, Appendix 2.2, Appendix 2.4, Index
Aug., 2006	SH(NA)-080483ENG-F	Partial correction SAFETY PRECAUTIONS, Section 2.1.5, 6.1.1, 6.1.2, 9.1.5, 10.2, 10.3.1, 12.5.1, 12.5.2, Appendix 1.3, 1.4
Sep., 2006	SH(NA)-080483ENG-G	Partial correction GENERIC TERMS AND ABBREVIATIONS, Section 7.1.2, 9.1.6, 10.3.1, 11.3.3, 12.3.4, 12.3.6, 12.7
Oct., 2006	SH(NA)-080483ENG-H	Addition Section 12.3.11 Partial correction SAFETY PRECAUTIONS, Section 1.1, 2.1.1, Chapter3, Section 4.1, 4.2.1, 5.1, 5.2.1, 5.2.2, 5.3, 6.1.1, 9.1.1, 9.1.2, 9.1.3, 9.1.5, 9.2.3, 9.2.5, 10.2, 10.3.1, 10.6.1, 10.6.2, 11.3.1, 11.4, 11.5, 12.2.19, 12.3.2, 12.3.3, 12.3.5, 12.3.10, 12.6, 12.7, Appendix 1.2, Appendix 2.2

Revision Date	*Manual number	Description
Apr., 2007	SH(NA)-080483ENG-I	Universal model QCPU model addition, Revision involving High Performance model QCPU and Redundant CPU serial No.09012 Model Addition Q02UCPU, Q03UDCPU, Q04UDHCPU, Q06UDHCPU, Q65WRB Addition Section 4.4, 12.2.25 Partial correction SAFETY PRECAUTIONS, ABOUT MANUALS, GENERIC TERMS AND ABBREVIATIONS, Chapter 1, Section 1.1, 2.1, 2.1.1, 2.1.2, 2.1.3, 2.1.4, 2.1.5, 2.2, 4.1, 4.2.2, 4.3.2, 5.1, 5.2.1, 5.2.3, 6.1.1, 6.1.2, 6.1.3, 6.1.4, 7.1.1, 7.1.2, 7.1.3, 7.1.5, 7.1.6, 7.1.7, 7.2.2, 9.1.3, 9.1.5, 10.3.1, 10.3.3, 10.4, 10.6.1, 10.6.2, 11.1, 11.2, 11.3.1, 11.3.2, 11.3.3, 11.3.4, 11.4, 11.5, 12.1, 12.2.1, 12.2.2, 12.2.3, 12.2.10, 12.2.15, 12.2.21, 12.2.22, 12.2.23, 12.3.1, 12.3.2, 12.3.3, 12.3.4, 12.3.5, 12.3.6, 12.3.7, 12.3.8, 12.3.9, 12.3.11, 12.4.1, 12.5.1, 12.5.2, 12.6, 12.7, Appendix 1.1, Appendix 1.3, Appendix 1.4, Appendix 2.2, Appendix 3
Jan., 2008	SH(NA)-080483ENG-J	Revision due to the support for Redundant CPU serial number 09102 Model Addition QA6ADP, Q64PN Addition Appendix 2.6 Partial correction SAFETY PRECAUTION, GENERIC TERMS AND ABBREVIATIONS, Section 1.1, 2.1.1, 2.1.2, 2.1.3, 2.1.5, 4.1, 4.2.1, 4.3.1, 4.4.1, Chapter 3, Section 5.1, 5.2.1, 5.2.2, 5.3, 6.1.2, 6.1.3, 9.1.1, 9.1.2, 9.1.5, 9.1.6, 9.2.3, 10.1, 10.3.1, 10.3.3, 10.6.1, 10.6.2, 11.2, 11.3.1, 11.3.4, 12.2.13, 12.2.22, 12.3.3, 12.3.4, 12.3.5, 12.3.9, 12.4.1, 12.4.2, 12.5.1, 12.5.2, 12.6, 12.7, Appendix 1.2, Appendix 2.5, Index
Mar., 2008	SH(NA)-080483ENG-K	Model Addition Q13UDHCPU, Q26UDHCPU Addition Section 11.3.1 Partial correction GENERIC TERMS AND ABBREVIATIONS, PRECAUTIONS FOR USE, Chapter 1, Section 1.1, 2.1.2, 2.1.4, 2.1.5, 4.1, 4.4.1, 5.2.1, 5.3, 6.1.1, 6.1.3, 7.1.1, 7.1.6, 7.2.1, 10.3.1, 11.1, 11.2, 11.3.1, 11.3.2, 11.3.4, 12.3.1, 12.3.3, 12.3.4, 12.3.5, 12.3.6, 12.6, 12.7, Appendix 1.1, Appendix 2.2, Appendix 2.3, Appendix 2.4, Appendix 2.5, Appendix 2.6 Section11.3.1 → 11.3.2, Section11.3.2 → 11.3.3, Section11.3.3 → 11.3.4, Section11.3.4 → 11.3.5
May, 2008	SH(NA)-080483ENG-L	Revision due to the addition of Process CPU and Universal model QCPU. Addition Section 12.2.26, 12.2.27, 12.2.28, 12.2.29, 12.2.30, 12.2.31, 12.5.2 Model Addition Chapter 1, Section 1.1, 2.1.2, 2.1.3, 2.1.4, 2.1.5, 2.2, 4.1, 4.3.1, 4.4.1, 6.1.3, 7.1.2, 11.3.2, 12.2.1, 12.3.3, 12.3.4, 12.3.5, 12.3.6, 12.3.9, 12.6, 12.7, Appendix1.1, Appendix 2, Appendix 2.4, Appendix 2.5, Appendix 2.6

Revision Date	*Manual number	Description
Sep., 2008	SH(NA)-080483ENG-M	Partial correction SAFETY PRECAUTION, Section 1.1, 2.2, 7.1.6, 7.2.1, 9.1.3, 9.1.5, Appendix 2.6 Addition Appendix 4
Dec., 2008	SH(NA)-080483ENG-N	Universal model QCPU model additions Revision and overall review for support to the Universal model QCPU serial number "10101". Model Addition Q00UJCPU, Q00UCPU, Q01UCPU, Q10UDHCPU, Q10UDEHCPU, Q20UDHCPU, Q20UDEHCPU
Mar., 2009	SH(NA)-080483ENG-O	Revision due to the support for Universal model QCPU serial number "11012". Partial correction SAFETY PRECAUTIONS, INTRODUCTION, GENERIC TERMS AND ABBREVIATIONS, Section 1.1, 2.1.3, 2.1.4, 4.1.3, 4.1.5, 4.3.1, 4.3.2, 4.3.5, 4.4.1, 5.2.1, 5.2.3, 5.2.4, 5.3, 6.1.1, 6.1.2, 7.1.2, 7.1.6, CHAPTER 8, Section 9.1.2, 9.1.3, 9.1.5, 9.2, 9.2.4, 10.1, 10.3.1, 10.3.3, CHAPTER 11, Section 11.3.1, 11.3.2, 11.3.3, 12.1, 12.2.1 to 12.2.12, 12.2.14 to 12.2.36, 12.3.11, 12.5.1, 12.6, 12.7, 12.8, Appendix 2.6 Addition 12.2.37 to 12.2.39
Jul., 2009	SH(NA)-080483ENG-P	Revision because of function support by the Universal model QCPU having a serial number "11043" or later Partial correction GENERIC TERMS AND ABBREVIATIONS, Section 2.1.3, 2.1.6, 7.2.2, 11.3.1, 11.3.2, 11.3.3, 11.4, 11.5, 12.3.3, 12.3.4, 12.4, 12.7, 12.8, Appendix 2.6
Dec., 2009	SH(NA)-080483ENG-Q	Partial correction SAFETY PRECAUTIONS, Section 5.3, 11.3.2, 11.3.4, 12.3.3, 12.7, 12.8 Addition CONDITIONS OF USE FOR THE PRODUCT
Apr., 2010	SH(NA)-080483ENG-R	Revision on the new models and functions of the Universal model QCPU (The added functions are supported in the module whose serial number is "12012" or later.) Model Addition Q50UDEHCPU, Q100UDEHCPU Partial correction SAFETY PRECAUTIONS, INTRODUCTION, MANUALS, MANUAL PAGE ORGANIZATION, GENERIC TERMS AND ABBREVIATIONS, Section 1.1, 2.1.2, 2.1.3, 2.1.4, 2.1.6, 4.1.5, 4.4.1, 5.2.1, 6.1.4, 7.1.1, CHAPTER 8, Section 9.1.3, 10.1, 10.3.3, CHAPTER 11, Section 11.3.1, 11.3.2, Appendix 1.1, Appendix 2.1, Appendix 2.2, Appendix 2.3, Appendix 2.4, Appendix 2.5, Appendix 2.6
Aug., 2010	SH(NA)-080483ENG-S	Revision on the new functions of the Universal model QCPU whose serial number (first 5 digits) is "12052" or later Partial correction SAFETY PRECAUTIONS, Section 4.1.5, 9.1.2, 10.1, 12.3.1, 12.3.4, 12.3.5, 12.3.6, 12.3.9, Appendix 2.6
Jan., 2011	SH(NA)-080483ENG-T	Partial correction SAFETY PRECAUTIONS, Section 2.1.1, 2.1.2, 6.1.1, 9.1, 9.2, 12.2.2, 12.3.3, 12.3.4, 12.3.11, 12.8, 12.9, Appendix 2.6

Revision Date	*Manual number	Description
May, 2011	SH(NA)-080483ENG-U	Partial correction GENERIC TERMS AND ABBREVIATIONS, Section 2.1.2, 2.1.3, 2.1.4, 2.1.8, CHAPTER 3, Section 5.1, 6.1.2, 6.1.3, 9.1.1, 10.3.1, 10.6.1, 12.3.3, 12.3.11, 12.9, Appendix 1.3, Appendix 2.6
Jul., 2011	SH(NA)-080483ENG-V	Revision due to the layout change of the manual
Oct., 2011	SH(NA)-080483ENG-W	Revision on the new functions of the Universal model QCPU whose serial number (first five digits) is "13102" or later Model Addition QA1S51B Partial correction ISAFETY PRECAUTIONS, NTRODUCTION, TERMS, Section 1.1, 2.1, 2.2, 2.3, 2.3.1, 4.1.2, 4.2.3, 4.3.1, 4.3.4, 4.6.1, CHAPTER 5, Section 6.1.1, 7.1.1, 7.2.1, 7.2.3, 8.1, 8.2, 8.3, 11.3.2, 13.1.4, 13.2, 13.3.4, Appendix 1.4, Appendix 1.5, Appendix 1.7, Appendix 1.9, Appendix 2, Appendix 3, Appendix 5, Appendix 5.2, Appendix 6.6, Appendix 7.1.6, Appendix 12.2, Appendix 12.4
Feb., 2012	SH(NA)-080483ENG-X	Revision on the new functions of the Universal model QCPU whose serial number (first five digits) is "14022" or later Partial correction Section 2.3, 4.6.4, Appendix 1.3, Appendix 1.5, Appendix 1.11, Appendix 2, Appendix 3, Appendix 6.6, Appendix 7.1
May, 2012	SH(NA)-080483ENG-Y	Motion CPU model addition Revision on the new functions of the Universal model QCPU whose serial number (first 5 digits) is "14042" or later Model Addition Q172DCPU-S1, Q173DCPU-S1, Q172DSCPU, Q173DSCPU Partial correction TERMS, Section 2.2, 2.3.2, 7.1, 7.2.2, 8.2, CHAPTER 12, Section 12.1, 12.2, 13.1.1, 13.1.4 to 13.1.6, 13.3.1 to 13.3.4, 13.3.6, 13.3.8, 13.3.9, Appendix 1.1 to 1.9, 1.11, 2, 3, 5.1, 6.4 to 6.6
Aug., 2012	SH(NA)-080483ENG-Z	Revision on the new functions of the Universal model QCPU whose serial number (first 5 digits) is "14072" or later Partial correction Section 7.1, 11.3.1, Appendix 1.4, 1.5, 1.6, 1.11, 2, 3, 6.6, 7.2
Feb., 2013	SH(NA)-080483ENG-AA	Revision on the new models of the Universal model QCPU Model Addition Q03UDVCPU, Q04UDVCPU, Q06UDVCPU, Q13UDVCPU, Q26UDVCPU
Sep., 2013	SH(NA)-080483ENG-AB	Revision on the new model of the C Controller module, and the new functions of the Universal model QCPU whose serial number (first 5 digits) is "15043" or later
Jan., 2014	SH(NA)-080483ENG-AC	Revision on the new functions of the Universal model QCPU whose serial number (first five digits) is "15103" or later Revision on the new functions of the High Performance model QCPU, Process CPU, Redundant CPU whose serial number (first five digits) is "16021" or later Partial correction Section 2.2, 2.3, 2.3.2, 4.8.1, 4.8.3, 6.1.1, 6.1.2, 6.1.3, 6.2.2, 6.2.3, 6.2.4, 7.1, 7.2.1, 15.3.8, Appendix 1.6, 3, 5.1, 6.2, 6.4, 6.5, 6.6, 12.1, 12.2 Addition Section 15.3.7
Feb., 2014	SH(NA)-080483ENG-AD	Partial correction Section 9.1.1

Revision Date	*Manual number	Description
Jul., 2014	SH(NA)-080483ENG-AE	Revision on the new functions of the High-speed Universal model QCPU whose serial number (first five digits) is "16043" or later Model Addition QA1S6ADP Partial correction TERMS, Section 1.1, 2.2, 2.3, 2.3.1, 4.2.3, 4.3.1, 4.4, 4.8.3, 7.1.1, 8.2, 13.2, Appendix 1.4, 1.6, 1.11, 2, 3, 7.1.6
Sep., 2014	SH(NA)-080483ENG-AF	Redundant power supply module model addition Model Addition Q64RPN Partial correction TERMS, 4.8.1, 7.1, 7.1.1, 7.2.1, 7.2.3, Appendix 3,12.2
Dec., 2014	SH(NA)-080483ENG-AG	Partial correction Appendix 12.4
Jan., 2015	SH(NA)-080483ENG-AH	Revision on the new functions of the High-speed Universal model QCPU whose serial number (first five digits) is "17012" or later Model Addition NZ1MEM-2GBSD, NZ1MEM-4GBSD, NZ1MEM-8GBSD, NZ1MEM-16GBSD Partial correction TERMS, Section 2.1, 2.2, 2.3, 2.3.1, 2.3.2, 2.3.4, 4.5, 6.1.2, 10.1, 10.2, 13.3.1, 15.1.4, Appendix 1.4, 1.6, 1.11, 2, 3, 6.2, 6.6, 8.1, 8.1.7, 13.1, 13.4 Addition Appendix 7
Feb., 2015	SH(NA)-080483ENG-AI	Partial correction Appendix 13
Mar., 2015	SH(NA)-080483ENG-AJ	Partial correction Appendix 6.6
Jun., 2015	SH(NA)-080483ENG-AK	Revision on the new functions of the High-speed Universal model QCPU whose serial number (first five digits) is "17052" or later Partial correction Appendix 1.11, 2, 3, 6.6
Dec., 2015	SH(NA)-080483ENG-AL	Revision on the new functions of the High-speed Universal model QCPU whose serial number (first five digits) is "17103" or later Partial correction Section 6.1.3, 9.1, Appendix 1, 2, 3, 6, 13
Jul., 2016	SH(NA)-080483ENG-AM	Revision on the new functions of the High-speed Universal model QCPU whose serial number (first five digits) is "18052" or later Partial correction Section 13.4, Appendix 1.5, 1.11, 2, 3, 6.6, 8.1.2
Oct., 2016	SH(NA)-080483ENG-AN	Revision on the new functions of the High-speed Universal model QCPU whose serial number (first five digits) is "18072" or later Partial correction MANUALS, Appendix 1.11, 3, 6.6, 8, 8.1.3

Revision Date	*Manual number	Description
Jan., 2017	SH(NA)-080483ENG-AO	Revision on the new functions of the High-speed Universal model QCPU whose serial number (first five digits) is "18112" or later Partial correction MANUALS, Section 15.3, Appendix 1, 2, 3, 6.6
Apr., 2017	SH(NA)-080483ENG-AP	Partial correction Appendix 1
Aug., 2017	SH(NA)-080483ENG-AQ	Revision on the new functions of the High-speed Universal model QCPU whose serial number (first five digits) is "19062" or later Partial correction Appendix 1.3, 1.5, 1.11, 2, 3, 6.6
Dec., 2017	SH(NA)-080483ENG-AR	Partial correction Section 12.1, 15.3.12, Appendix 3
Sep., 2018	SH(NA)-080483ENG-AS	• Revision on the new functions of the High-speed Universal model QCPU and Universal model Process CPU whose serial number (first five digits) is "20042" or later • Revision on the new functions of the High-speed Universal model QCPU and Universal model Process CPU whose serial number (first five digits) is "20073" or later Model Addition Q04UDPVCPU, Q06UDPVCPU, Q13UDPVCPU, Q26UDPVCPU Partial correction Section 15.3.6, Appendix 1, 2, 3, 6.6, 13 Addition Appendix 13
Dec., 2018	SH(NA)-080483ENG-AT	Partial correction TERMS, Section 2.2, 9.1.1, 9.2.1, 9.2.2, 9.3.1, 13.3.2, Appendix 1.4, 4.3, 6.3, 6.6, 11
Apr., 2019	SH(NA)-080483ENG-AU	Partial correction SAFETY PRECAUTIONS, TERMS, Section 2.1, 2.2, 2.3, 4.1.2, 4.2.3, 6.1.1, 6.1.3, 7.1, 7.2.5, 8.1, 12.1, 12.2, 13.3.1, 13.4, 14.1, Appendix 1.4, 1.9, 2, 3, 4.2, 4.3, 6.3, 8.1, 8.2, 11, 14.1
Jul., 2020	SH(NA)-080483ENG-AV	Partial correction SAFETY PRECAUTIONS, Chapter 3, Section 10.3
Dec., 2020	SH(NA)-080483ENG-AW	Partial correction Appendix 1.5, 2, 4.2, 6.3
Mar., 2021	SH(NA)-080483ENG-AX	Partial correction SAFETY PRECAUTIONS
Jul., 2022	SH(NA)-080483ENG-AY	Partial correction SAFETY PRECAUTIONS, Section 4.5, 13.3.2, Appendix 8
Sep., 2023	SH(NA)-080483ENG-AZ	Partial correction Section 4.8.1, 7.1, Appendix 1.11, 8.1.7

Revision Date	*Manual number	Description
Jun., 2024	SH(NA)-080483ENG-BA	Partial correction INTRODUCTION, Section 1.1, 4.8.1, 4.8.2, 6.1.3, 6.2.5, 7.2.1, 8.3, Appendix 1.11, 8.1
Dec., 2024	SH(NA)-080483ENG-BB	Partial correction RELEVANT MANUALS, Appendix 8.1.1, 8.1.3, 12.1, 12.2

Japanese manual version SH-080472-BK

This manual confers no industrial property rights or any rights of any other kind, nor does it confer any patent licenses. Mitsubishi Electric Corporation cannot be held responsible for any problems involving industrial property rights which may occur as a result of using the contents noted in this manual.

© 2004 MITSUBISHI ELECTRIC CORPORATION

WARRANTY

Please confirm the following product warranty details before using this product.

1. Gratis Warranty Term and Gratis Warranty Range

If any faults or defects (hereinafter "Failure") found to be the responsibility of Mitsubishi occurs during use of the product within the gratis warranty term, the product shall be repaired at no cost via the sales representative or Mitsubishi Service Company.

However, if repairs are required onsite at domestic or overseas location, expenses to send an engineer will be solely at the customer's discretion. Mitsubishi shall not be held responsible for any re-commissioning, maintenance, or testing on-site that involves replacement of the failed module.

[Gratis Warranty Term]

The gratis warranty term of the product shall be for one year after the date of purchase or delivery to a designated place. Note that after manufacture and shipment from Mitsubishi, the maximum distribution period shall be six (6) months, and the longest gratis warranty term after manufacturing shall be eighteen (18) months. The gratis warranty term of repair parts shall not exceed the gratis warranty term before repairs.

[Gratis Warranty Range]

(1) The range shall be limited to normal use within the usage state, usage methods and usage environment, etc., which follow the conditions and precautions, etc., given in the instruction manual, user's manual and caution labels on the product.

(2) Even within the gratis warranty term, repairs shall be charged for in the following cases.

1. Failure occurring from inappropriate storage or handling, carelessness or negligence by the user. Failure caused by the user's hardware or software design.
2. Failure caused by unapproved modifications, etc., to the product by the user.
3. When the Mitsubishi product is assembled into a user's device, Failure that could have been avoided if functions or structures, judged as necessary in the legal safety measures the user's device is subject to or as necessary by industry standards, had been provided.
4. Failure that could have been avoided if consumable parts (battery, backlight, fuse, etc.) designated in the instruction manual had been correctly serviced or replaced.
5. Failure caused by external irresistible forces such as fires or abnormal voltages, and Failure caused by force majeure such as earthquakes, lightning, wind and water damage.
6. Failure caused by reasons unpredictable by scientific technology standards at time of shipment from Mitsubishi.
7. Any other failure found not to be the responsibility of Mitsubishi or that admitted not to be so by the user.

2. Onerous repair term after discontinuation of production

(1) Mitsubishi shall accept onerous product repairs for seven (7) years after production of the product is discontinued. Discontinuation of production shall be notified with Mitsubishi Technical Bulletins, etc.

(2) Product supply (including repair parts) is not available after production is discontinued.

3. Overseas service

Overseas, repairs shall be accepted by Mitsubishi's local overseas FA Center. Note that the repair conditions at each FA Center may differ.

4. Exclusion of loss in opportunity and secondary loss from warranty liability

Regardless of the gratis warranty term, Mitsubishi shall not be liable for compensation to:

(1) Damages caused by any cause found not to be the responsibility of Mitsubishi.

(2) Loss in opportunity, lost profits incurred to the user by Failures of Mitsubishi products.

(3) Special damages and secondary damages whether foreseeable or not, compensation for accidents, and compensation for damages to products other than Mitsubishi products.

(4) Replacement by the user, maintenance of on-site equipment, start-up test run and other tasks.

5. Changes in product specifications

The specifications given in the catalogs, manuals or technical documents are subject to change without prior notice.

INFORMATION AND SERVICES

For further information and services, please contact your local Mitsubishi Electric sales office or representative.
Visit our website to find our locations worldwide.

MITSUBISHI ELECTRIC Factory Automation Global Website
Locations Worldwide
www.MitsubishiElectric.com/fa/about-us/overseas/

TRADEMARKS

Microsoft and Windows are trademarks of the Microsoft group of companies.
The SD and SDHC logos are trademarks of SD-3C, LLC.
The company names, system names and product names mentioned in this manual are either registered trademarks or trademarks of their respective companies.
In some cases, trademark symbols such as '™' or '®' are not specified in this manual.





SH(NA)-080483ENG-BB

SH(NA)-080483ENG-BB(2412)MEE
MODEL: QCPU-U-HH-E

MITSUBISHI ELECTRIC CORPORATION
HEAD OFFICE: TOKYO BLDG., 2-7-3, MARUNOUCHI, CHIYODA-KU, TOKYO 100-8310, JAPAN
NAGOYA WORKS: 1-14, YADA-MINAMI 5-CHOME, HIGASHI-KU, NAGOYA 461-8670, JAPAN

When exported from Japan, this manual does not require application to the Ministry of Economy, Trade and Industry for service transaction permission.

Specifications subject to change without notice.