MITSUBISHI ELECTRIC

Programmable Controller

MELSEC iQ-F series

MELSEC iQ-F FX5S/FX5UJ/FX5U/FX5UC User's Manual (Hardware)

- FX5S CPU module
- FX5UJ CPU module
- FX5U CPU module
- FX5UC CPU module
- Input module
- Output module
- Input/output module
- High-speed pulse input/output module
- Powered input/output module
- Extension power supply module
- Connector conversion module
- Expansion board
- Expansion adapter

SAFETY PRECAUTIONS

(Read the precautions before using this product.)
Before using this product, please read this manual and the relevant manuals carefully and pay full attention to safety to handle the product correctly.
If the equipment is used in a manner not specified by the manufacturer, the protection provided by the equipment may be impaired.
This manual classifies the safety precautions into two categories: [⚠WARNING] and [⚠CAUTION].

⚠ **WARNING**	Indicates that incorrect handling may cause hazardous conditions, resulting in death or severe injury.
⚠ **CAUTION**	Indicates that incorrect handling may cause hazardous conditions, resulting in minor or moderate injury or property damage.

Depending on the circumstances, failure to observe procedures indicated by [⚠CAUTION] may also cause severe injury.
Observe the precautions of both levels because they are important for personal and system safety.
Ensure that the end users read this manual and then keep the manual in a safe place for future reference.

[DESIGN PRECAUTIONS]

⚠ WARNING

- Make sure to set up the following safety circuits outside the programmable controller to ensure safe system operation even during external power supply problems or programmable controller failure. Otherwise, malfunctions may cause serious accidents.
  - Emergency stop circuits, protection circuits, and protective interlock circuits (for conflicting operations such as forward/reverse rotations or for preventing damage to the equipment such as upper/lower limit positioning) must be configured external to the programmable controller.
  - Note that when the CPU module detects an error, such as a watchdog timer error, during self-diagnosis, all outputs are turned off. Also, when an error occurs in an input/output control block, where it cannot be detected by the CPU module, output control may be disabled. External circuits and mechanisms should be designed to ensure safe machinery operation in such a case.
  - Note that the output current of the 24VDC service power supply varies depending on the model and the absence/presence of extension modules. If an overload occurs, the voltage automatically drops, inputs in the programmable controller are disabled, and all outputs are turned off. External circuits and mechanisms should be designed to ensure safe machinery operation in such a case.
  - Note that when an error occurs in a relay, triac or transistor of an output circuit, the output might stay on or off. For output signals that may lead to serious accidents, external circuits and mechanisms should be designed to ensure safe machinery operation in such a case.
- Construct an interlock circuit in the program so that the whole system always operates on the safe side before executing the control (for data change) of the programmable controller in operation. Read the manual thoroughly and ensure complete safety before executing other controls (program change, parameter change, forced output, and operation status change) to the programmable controller in operation.
  Improper operation may damage machines or cause accidents.
- In an output circuit, when a load current exceeding the current rating or an overcurrent caused by a load short-circuit flows for a long time, it may cause smoke and fire. To prevent this, configure an external safety circuit, such as a fuse.
- For the operating status of each station after a communication failure of the network, refer to relevant manuals for the network. Incorrect output or malfunction may result in an accident.

[DESIGN PRECAUTIONS]

⚠ WARNING

[Precautions for using products in a UL/cUL Class I, Division 2 environment]

- Products*1 with the Cl.I, DIV.2 mark on the rating plate are suitable for use in Class I, Division 2, Groups A, B, C and D hazardous locations, or nonhazardous locations only. This mark indicates that the product is certified for use in the Class I, Division 2 environment where flammable gases, vapors, or liquids exist under abnormal conditions.
  When using the products in the Class I, Division 2 environment, observe the following conditions to reduce the risk of explosion.
  - This device is open-type and is to be installed in an enclosed area under suitable environment which requires a tool or key to open.
  - Warning - Explosion Hazard - Substitution of any component may impair suitability for Class I, Division 2.
  - Warning - Explosion Hazard - Do not disconnect equipment while the circuit is live or unless the area is known to be free of ignitable concentrations.
  - Only while the power is off or in nonhazardous locations, switch or press buttons.
  - Do not open the cover of the CPU module and remove the battery unless the area is known to be nonhazardous.
  - Input circuit power supply: 24VDC (-15% to 0%)
  - Ambient temperature: 0 to 55℃
    Temperature class: T4A

  For the derating chart, refer to the following.
  The simultaneous ON ratio during derating indicates the ratio per connector.
  ☞ Page 101 FX5UC CPU module

*1 The supported products are as follows:
Manufactured in October 2017 onwards
· FX5 CPU module
FX5UC-32MT/D, FX5UC-32MT/DSS, FX5UC-64MT/D, FX5UC-64MT/DSS, FX5UC-96MT/D, FX5UC-96MT/DSS
· FX5 extension module
FX5-C16EX/D, FX5-C16EX/DS, FX5-C16EYT/D, FX5-C16EYT/DSS, FX5-C32EX/D, FX5-C32EX/DS, FX5-C32EYT/D, FX5-C32EYT/DSS, FX5-C32ET/D, FX5-C32ET/DSS, FX5-232ADP, FX5-485ADP, FX5-C1PS-5V, FX5-CNV-BUSC, FX5-4AD-ADP, FX5-4DA-ADP

[DESIGN PRECAUTIONS]

⚠ CAUTION

- When an inductive load such as a lamp, heater, or solenoid valve is controlled, a large current (approximately ten times greater than normal) may flow when the output is turned from off to on. Take proper measures so that the flowing current does not exceed the value corresponding to the maximum load specification of the resistance load.
- After the CPU module is powered on or is reset, the time taken to enter the RUN status varies depending on the system configuration, parameter settings, and/or program size.
  Design circuits so that the entire system will always operate safely, regardless of this variation in time.
- Simultaneously turn on and off the power supplies of the CPU module and extension modules.
- If a long-time power failure or an abnormal voltage drop occurs, the programmable controller stops, and output is turned off. When the power supply is restored, it will automatically restart (when the RUN/STOP/RESET switch is on RUN side).

[SECURITY PRECAUTIONS]

⚠ WARNING

- To maintain the security (confidentiality, integrity, and availability) of the programmable controller and the system against unauthorized access, denial-of-service (DoS) attacks, computer viruses, and other cyberattacks from unreliable networks and devices via network, take appropriate measures such as firewalls, virtual private networks (VPNs), and antivirus solutions.

[INSTALLATION PRECAUTIONS]

⚠ WARNING

- Make sure to cut off all phases of the power supply externally before attempting installation or wiring work. Failure to do so may cause electric shock or damage to the product.
- Use the product within the generic environment specifications described in this manual.
  Never use the product in areas with excessive dust, oily smoke, conductive dust, corrosive gas (salt air, Cl_2, H_2S, SO_2, or NO_2), flammable gas, or vibration or impacts, or expose it to high temperature, condensation, or rain and wind.
  If the product is used in such conditions, electric shock, fire, malfunctions, deterioration or damage may occur.

[INSTALLATION PRECAUTIONS]

⚠ CAUTION

- Do not touch the conductive parts of the product directly. Doing so may cause device failures or malfunctions.
- When drilling screw holes or wiring, make sure that cutting and wiring debris do not enter the ventilation slits of the programmable controller. Failure to do so may cause fire, equipment failures or malfunctions.
- For products supplied together with a dust proof sheet, the sheet should be affixed to the ventilation slits before the installation and wiring work to prevent foreign objects such as chips and wiring debris. However, when the installation work is completed, make sure to remove the sheet to provide adequate ventilation. Failure to do so may cause fire, equipment failures or malfunctions.
- Install the product on a flat surface. If the mounting surface is rough, undue force will be applied to the PC board, thereby causing nonconformities.
- Install the product securely using a DIN rail or mounting screws.
- Connect the expansion board and expansion adapter securely to their designated connectors. Loose connections may cause malfunctions.
- Make sure to affix the expansion board with tapping screws. Tightening torque should follow the specifications in the manual. If the screws are tightened outside of the specified torque range, poor connections may cause malfunctions.
- Work carefully when using a screwdriver such as installation of the product. Failure to do so may cause damage to the product or accidents.
- Connect the extension cables, peripheral cables, input/output cables and battery connecting cable securely to their designated connectors. Loose connections may cause malfunctions.
- When using an SD memory card, insert it into the SD memory card slot. Check that it is inserted completely. Poor contact may cause malfunction.
- Turn off the power to the programmable controller before attaching or detaching the following devices. Failure to do so may cause equipment failures or malfunctions.
  - Peripheral devices, expansion board, expansion adapter, and connector conversion adapter
  - Extension modules, bus conversion module, and connector conversion module
  - Battery
- Hold the connector part of the Ethernet cable and perform installation or removal in a straight direction. If the cable is pulled out while connected to the module, it may cause damage to the module or the cable, or may cause a malfunction due to poor cable contact.

[WIRING PRECAUTIONS]

⚠ WARNING

- Make sure to cut off all phases of the power supply externally before attempting installation or wiring work. Failure to do so may cause electric shock or damage to the product.
- Make sure to attach the terminal cover, provided as an accessory, before turning on the power or initiating operation after installation or wiring work. Failure to do so may cause electric shock.
- The temperature rating of the cable should be 80℃ or more.
  It may differ depending on the extension devices. For details, refer to the user's manual of the extension devices.
- Make sure to wire the screw terminal block in accordance with the following precautions. Failure to do so may cause electric shock, equipment failures, a short-circuit, wire breakage, malfunctions, or damage to the product.
  - The disposal size of the cable end should follow the dimensions described in the manual.
  - Tightening torque should follow the specifications in the manual.
  - Tighten the screws using a Phillips-head screwdriver No.2 (shaft diameter 6mm or less). Ensure that the screwdriver does not touch the partition part of the terminal block.
- Make sure to properly wire to the terminal block (European type) in accordance with the following precautions. Failure to do so may cause electric shock, equipment failures, a short-circuit, wire breakage, malfunctions, or damage to the product.
  - The disposal size of the cable end should follow the dimensions described in the manual.
  - Tightening torque should follow the specifications in the manual.
  - Twist the ends of stranded wires and ensure that there are no loose wires.
  - Do not solder-plate the electric wire ends.
  - Do not connect more than the specified number of wires or electric wires of unspecified size.
  - Affix the electric wires so that neither the terminal block nor the connected parts are directly stressed.
- Make sure to properly wire to the spring clamp terminal block in accordance with the following precautions. Failure to do so may cause electric shock, equipment failures, a short-circuit, wire breakage, malfunctions, or damage to the product.
  - The disposal size of the cable end should follow the dimensions described in the manual.
  - Twist the ends of stranded wires and ensure that there are no loose wires.
  - Do not solder-plate the electric wire ends.
  - Do not connect more than the specified number of wires or electric wires of unspecified size.
  - Affix the electric wires so that neither the terminal block nor the connected parts are directly stressed.

[WIRING PRECAUTIONS]

⚠ CAUTION

- Do not supply power externally to the [24+] and [24V] terminals (24VDC service power supply) on the CPU module or extension modules. Doing so may damage the product. Note that power may be supplied even when an electronic load which equips with an internal bias power supply is connected.
- Perform class D grounding (grounding resistance: 100Ω or less) of the grounding terminal on the CPU module and extension modules with a wire 2㎟ or thicker.
  Do not use common grounding with heavy electrical systems.
- Connect the power supply wiring to the dedicated terminals described in this manual. If an AC power supply is connected to a DC input/output terminal or DC power supply terminal, the programmable controller will burn out.
- Do not wire vacant terminals externally. Doing so may damage the product.
- Install module so that excessive force will not be applied to terminal blocks, power connectors, I/O connectors, communication connectors, or communication cables. Failure to do so may result in wire damage/breakage or programmable controller failure.
- Make sure to observe the following precautions to prevent any damage to the machinery or accidents due to malfunction of the programmable controller caused by abnormal data written to the programmable controller due to the effects of noise.
  - Do not bundle the power line, control line and communication cables together with or lay them close to the main circuit, high-voltage line, load line or power line. As a guideline, lay the power line, control line and communication cables at least 100mm away from the main circuit, high-voltage line, load line or power line.
  - Ground the shield of the shield wire or shielded cable at one point on the programmable controller. However, do not use common grounding with heavy electrical systems.
  - Ground the shield of the analog I/O wire in accordance with the manuals of each model. However, do not use common grounding with heavy electrical systems.

[STARTUP AND MAINTENANCE PRECAUTIONS]

⚠WARNING

- Do not touch any terminal while the programmable controller's power is on. Doing so may cause electric shock or malfunctions.
- Before cleaning or retightening terminals, cut off all phases of the power supply externally. Failure to do so in the power ON status may cause electric shock.
- Before modifying the program, performing forced output, or running or stopping the programmable controller while the system is running, read through this manual carefully, and ensure complete safety. An operation error may damage the machinery or cause accidents.
- Do not change the program in the programmable controller from two or more peripherals at the same time. (such as from an engineering tool and a GOT) Doing so may cause destruction or malfunction of the programmable controller program.
- Use the battery for memory backup in conformance to this manual
  - Use the battery for the specified purpose only.
  - Connect the battery correctly.
  - Do not charge, disassemble, heat, put in fire, short-circuit, connect reversely, solder, swallow, or burn the battery, or apply excessive forces (vibration, impact, drop, etc.) to the battery.
  - Do not store or use the battery at high temperatures or expose to direct sunlight.
  - Do not expose to water, bring near fire or touch liquid leakage or other contents directly.
  - When replacing the battery, make sure to use our specified product (FX3U-32BL).
  - When a battery error occurs ("BAT" LED is on in red), follow the description in this manual.

  Incorrect handling of the battery may cause excessive heat generation, bursting, ignition, liquid leakage or deformation, and lead to injury, fire or failures and malfunction of facilities and other equipment.

[STARTUP AND MAINTENANCE PRECAUTIONS]

⚠ CAUTION

- Do not disassemble or modify the programmable controller. Doing so may cause fire, equipment failures, or malfunctions.
  For repair, contact your local Mitsubishi Electric representative.
- After the first use of the SD memory card, do not insert/remove the memory card more than 500 times. Doing so 500 times or more may cause malfunction.
- Turn off the power to the programmable controller before connecting or disconnecting any extension cable. Failure to do so may cause equipment failures or malfunctions.
- Turn off the power to the programmable controller before attaching or detaching the following devices. Failure to do so may cause equipment failures or malfunctions.
  - Peripheral devices, expansion board, expansion adapter, and connector conversion adapter
  - Extension modules, bus conversion module, and connector conversion module
  - Battery
- Do not use the chemicals for cleaning.
- If there is the possibility of touching the programmable controller inside a control panel in maintenance, make sure to discharge to avoid the influence of static electricity.
- Since there are risks such as burn injuries, please do not touch the surface of the equipment with bare hands when it is operating in an environment which exceeds ambient temperature of 50℃.

[OPERATION PRECAUTIONS]

⚠ CAUTION

- Construct an interlock circuit in the program so that the whole system always operates on the safe side before executing the control (for data change) of the programmable controller in operation. Read the manual thoroughly and ensure complete safety before executing other controls (program change, parameter change, forced output, and operation status change) to the programmable controller in operation. Improper operation may damage machines or cause accidents.

[DISPOSAL PRECAUTIONS]

⚠ CAUTION

- When disposing of this product, treat it as industrial waste.
- When disposing of batteries, separate them from other waste according to local regulations. (For details on the Battery Directive in EU countries, refer to this manual.)

[TRANSPORTATION PRECAUTIONS]

⚠CAUTION

- When transporting the programmable controller with the optional battery, turn on the programmable controller before shipment, confirm that the battery mode is set using a parameter and the BAT LED is off, and check the battery life. If the programmable controller is transported with the BAT LED ON or the battery exhausted, the battery-backed data may be unstable during transportation.
- The programmable controller is a precision instrument. During transportation, avoid impacts larger than those specified in the general specifications by using dedicated packaging boxes and shock-absorbing palettes. Failure to do so may cause failures in the programmable controller. After transportation, verify operation of the programmable controller and check for damage of the mounting part, etc.
- When transporting lithium batteries, follow required transportation regulations. (For details on the regulated products, refer to this manual.)
- The halogens (such as fluorine, chlorine, bromine, and iodine), which are contained in a fumigant used for disinfection and pest control of wood packaging materials, may cause failure of the product. Prevent the entry of fumigant residues into the product or consider other methods (such as heat treatment) instead of fumigation. The disinfection and pest control measures must be applied to unprocessed raw wood.

PRÉCAUTIONS DE SÉCURITÉ

(Lire les précautions avant toute utilisation du produit.)
Avant d'utiliser ce produit, lire attentivement ce manuel ainsi que les manuels auxquels il renvoie, et toujours considérer la sécurité comme de la plus haute importance en manipulant le produit correctement.
Dans ce manuel, les précautions de sécurité sont regroupées en deux catégories : [AVERTISSEMENT] et [ATTENTION].

⚠ **AVERTISSEMENT**	Attire l'attention sur le fait qu'une négligence peut créer une situation de danger avec risque de mort ou de blessures graves.
⚠ **ATTENTION**	Attire l'attention sur le fait qu'une négligence peut créer une situation de danger avec risque de blessures légères ou de gravité moyennes ou risque de dégâts matériels.

Dans certaines circonstances, le non-respect d'une précaution de sécurité introduite sous le titre [ATTENTION] peut entraîner des blessures graves.
Les précautions de ces deux niveaux doivent être observées dans leur intégralité car elles ont trait à la sécurité des personnes et aussi du système.
Les utilisateurs finaux doivent lire ce manuel et ce dernier doit être conservé à portée de main pour qu'il soit possible de s'y référer autant que nécessaire.

[PRÉCAUTIONS DE CONCEPTION]

⚠ AVERTISSEMENT

- Configurer les circuits de sécurité suivants à l'extérieur de l'automate programmable pour garantir un fonctionnement sécurisé du système, même en cas de problèmes d'alimentation externe ou de panne de l'automate programmable. Si cette précaution n'est pas respectée, des accidents graves peuvent se produire en cas de dysfonctionnement.
  - Les circuits d'arrêt d'urgence, les circuits de protection et les circuits de verrouillage de sécurité (pour les opérations contradictoires de type rotation avant/arrière ou pour éviter d'endommager l'équipement en raison d'un positionnement en limite haute/basse) doivent être configurés à l'extérieur de l'automate programmable.
  - Si le module CPU détecte une erreur, comme une erreur d'horloge de surveillance, au cours de l'autodiagnostic, toutes les sorties sont mises hors service. De plus, si une erreur survient dans un bloc de commande d'entrée/de sortie, où elle ne peut pas être détectée par le module CPU, la commande de sortie peut être désactivée. Les circuits et mécanismes externes sont normalement conçus pour garantir un fonctionnement sécurisé des machines dans un tel cas.
  - Le courant de sortie de l'alimentation 24 V cc varie en fonction du modèle et de l'absence/la présence de modules d'extension. En cas de surcharge, la tension chute automatiquement, les entrées dans l'automate programmable sont désactivées et toutes les sorties sont mises hors service. Les circuits et mécanismes externes sont normalement conçus pour garantir un fonctionnement sécurisé des machines dans un tel cas.
  - Lorsqu'une erreur se produit dans le relais, le triac ou le transistor d'un circuit de sortie, la sortie peut rester activée ou désactivée. Si les signaux de sortie peuvent entraîner de graves accidents, les circuits et les mécanismes externes sont normalement conçus pour garantir un fonctionnement sécurisé des machines dans un tel cas.
- Mettre en place un circuit de verrouillage de sécurité dans le programme pour garantir que le système dans son ensemble fonctionne toujours en toute sécurité avant d'exécuter la commande (de changement dans les données) de l'automate programmable en fonctionnement. Lire attentivement le manuel et s'assurer que tout est sécurisé avant l'envoi d'autres instructions (changement de programme, changement de paramètres, sortie forcée et changement d'état opérationnel) à l'automate programmable en fonctionnement.
  Une fausse manœuvre pourrait être à l'origine d'un accident ou de dégâts matériels.
- Dans un circuit de sortie, si le courant de charge excède la valeur nominale ou si une surintensité causée par un court-circuit à la charge persiste longtemps, il peut en résulter un dégagement de fumée avec départ de feu. Pour éviter cela, configurer un circuit de sécurité externe, avec un fusible par exemple.
- Quant à l'état opérationnel de chacune des stations en cas de problème de communication sur le réseau, voir les manuels correspondants pour le réseau. Une sortie incorrecte ou un dysfonctionnement pourrait provoquer un accident.

[PRÉCAUTIONS DE CONCEPTION]

⚠AVERTISSEMENT

[Précautions d'utilisation des produits en environnement de Classe I, Division 2 UL/cUL]

- Les produits*1 marqués Cl.I, DIV.2 sur la plaque signalétique peuvent être utilisés en Classe I, Division 2, à des emplacements dangereux de groupe A, B, C et D, ou uniquement à des emplacements non dangereux. Ce logo indique que le produit est homologué pour une utilisation en environnement de Classe I, Division 2 où, dans des circonstances anormales, il peut y avoir présence de gaz, vapeurs ou liquides inflammables.
  Si le produit est utilisé en environnement de Classe I, Division 2, respecter les conditions suivantes pour réduire le risque d'explosion.
  - Ce module est de type ouvert et doit être installé dans une enceinte au sein d'un environnement approprié ne pouvant être ouverte qu'au moyen d'une clé ou d'un outil.
  - Avertissement - Danger d'explosion - Toute substitution de composant peut compromettre l'adéquation d'une utilisation en Classe I, Division 2.
  - Avertissement - Danger d'explosion - Ne pas déconnecter l'équipement quand le circuit est sous tension, ni avant de d'être assuré de l'absence d'atmosphère inflammable.
  - Ne pas ouvrir le couvercle du module CPU et ne pas retirer la batterie avant d'avoir vérifié que l'atmosphère est sans danger.
  - Température ambiante : 0 à 55℃
    Classe de température : T4A

*1 Les produits applicables sont les suivants :

Fabriqués à partir d'octobre 2017

· Module CPU FX5

FX5UC-32MT/D, FX5UC-32MT/DSS, FX5UC-64MT/D, FX5UC-64MT/DSS, FX5UC-96MT/D, FX5UC-96MT/DSS

· Module d'extension

FX5-C16EX/D, FX5-C16EX/DS, FX5-C16EYT/D, FX5-C16EYT/DSS, FX5-C32EX/D, FX5-C32EX/DS, FX5-C32EYT/D, FX5-C32EYT/DSS, FX5-C32ET/D, FX5-C32ET/DSS, FX5-232ADP, FX5-485ADP, FX5-C1PS-5V, FX5-CNV-BUSC, FX5-4AD-ADP, FX5-4DA-ADP

[PRÉCAUTIONS DE CONCEPTION]

⚠ATTENTION

- À la commande d'une charge inductive comme une lampe, un réchauffeur ou une électrovanne, un fort courant (jusqu'à 10 fois l'intensité normale) peut circuler quand la sortie est activée alors qu'elle était désactivée. Prendre des mesures appropriées pour que le courant circulant ne dépasse pas la valeur de charge résistive maximale spécifiée.
- À la mise sous tension ou à la réinitialisation du module CPU, le temps nécessaire à l'entrée en état RUN dépend de la configuration du système, du paramétrage et/ou de la taille du programme. Concevoir les circuits de manière à ce que l'ensemble du système fonctionne constamment en toute sécurité, étant donné que ce délai peut varier.
- Activer et désactiver simultanément l'alimentation électrique du module CPU et des modules d'extension.
- Si une coupure de courant persiste ou si une chute de tension anormale survient, l'automate programmable s'arrête et la sortie est désactivée. Lorsque le courant est rétabli, l'automate redémarre automatiquement (si l'interrupteur RUN/STOP/RESET est en position RUN).

[PRÉCAUTIONS DE SÉCURITÉ]

⚠ AVERTISSEMENT

- Pour assurer la sécurité (confidentialité, intégrité et disponibilité) de l'automate programmable et du système contre les accès non autorisés, les attaques par déni de service (DoS), les virus informatiques et autres cyberattaques provenant de réseaux et d'appareils dangereux via le réseau, prendre les mesures appropriées telles que la mise en place de pare-feux, de réseaux privés virtuels (VPN) et de solutions antivirus.

[PRÉCAUTIONS D'INSTALLATION]

⚠ AVERTISSEMENT

- Veiller à couper toutes les phases de l'alimentation électrique en externe avant d'effectuer une installation ou un câblage. Le non-respect de cette précaution peut entraîner une électrocution et endommager le produit.
- Utiliser le produit dans le cadre des spécifications générales concernant l'environnement décrites dans ce manuel.
  Ne jamais utiliser le produit dans des zones où il y a une présence excessive de poussière, fumée huileuse, poussières conductrices, gaz corrosif (air salin, Cl_2, H_2S, SO_2 ou NO_2) ou gaz inflammable, soumis à de fortes vibrations ou subissant des chocs importants, et ne pas l'exposer à des températures élevées, à une forte condensation, à la pluie ni au vent.
  Si le produit est utilisé dans de telles conditions, il y a un risque d'électrocution, d'incendie, de dysfonctionnement, de détérioration ou de dommages.

[PRÉCAUTIONS D'INSTALLATION]

⚠ ATTENTION

- Ne pas toucher directement les pièces conductrices du produit. Si cette précaution n'est pas respectée, le module risque de ne plus fonctionner ou de ne plus fonctionner correctement.
- Lors du perçage de trous pour le passage de vis ou de câbles, veiller à ce que les débris de coupe et de câbles n'entrent pas dans les grilles de ventilation de l'automate programmable. Si cette précaution n'est pas respectée, un départ de feu, des pannes de l'équipement ou des dysfonctionnements peuvent survenir.
- Si une feuille anti-poussière est fournie avec le produit, celle-ci doit être fixée aux grilles de ventilation avant l'installation et avant tout câblage pour éviter l'introduction de corps étrangers, tels que des copeaux et des débris de câblage.
  En revanche, une fois l'installation terminée, la feuille doit être retirée pour que l'air puisse circuler via les grilles de ventilation. Si cette précaution n'est pas respectée, un départ de feu, des pannes de l'équipement ou des dysfonctionnements peuvent survenir.
- Placer le produit sur une surface plane. Si la surface de montage est irrégulière, la carte PC va être soumise à une force excessive, ce qui va entraîner des non-conformités.
- Assurer une fixation sécurisée du produit en utilisant un profilé DIN ou des vis de fixation.
- Raccorder la carte d'extension et l'adaptateur d'extension à leurs connecteurs respectifs de manière sécurisée. Si les composants ne sont pas assez serrés, cela peut entraîner un dysfonctionnement du module.
- Fixer la carte d'extension à l'aide de vis taraudeuses. Pour le couple de serrage, suivre les spécifications indiquées dans le manuel. Si la plage de couple spécifiée n'est pas respectée pour le serrage des vis (vis trop/pas assez serrées), cela peut entraîner des problèmes de raccordement et des dysfonctionnements.
- La prudence est de rigueur lors de l'utilisation d'un tournevis pour l'installation du produit. Si cette précaution n'est pas respectée, le produit risque d'être endommagé ou des accidents peuvent se produire.
- Brancher les rallonges, les câbles périphériques, les câbles d'entrée/de sortie et le câble de raccordement de la batterie sur leurs connecteurs respectifs de manière sécurisée. Si les composants ne sont pas assez serrés, cela peut entraîner un dysfonctionnement du module.
- Si l'utilisation d'une carte mémoire SD est prévue, l'insérer dans la fente dédiée. Vérifier que la carte a bien été poussée à fond dans la fente. Tout mauvais contact peut être source de dysfonctionnements.
- Couper l'alimentation de l'automate programmable avant de brancher ou de débrancher les appareils suivants. Si cette précaution n'est pas respectée, l'équipement risque de ne plus fonctionner ou de ne plus fonctionner correctement.
  - Appareils périphériques, carte d'extension, adaptateur d'extension et adaptateur de conversion de connecteur
  - Modules d'extension, module de conversion de bus et module de conversion de connecteur
  - Batterie
- Maintenir le connecteur du câble Ethernet en position droite lors de son installation ou de son retrait. Si le câble est retiré alors qu'il était branché au module, le module ou le câble peut être endommagé, ou un dysfonctionnement peut se produire en raison d'un problème de contact du câble.

[PRÉCAUTIONS DE CABLAGE]

⚠ AVERTISSEMENT

- Veiller à couper toutes les phases de l'alimentation électrique en externe avant d'effectuer une installation ou un câblage. Le non-respect de cette précaution peut entraîner une électrocution et endommager le produit.
- Fixer le capuchon de la borne, lequel est fourni en tant qu'accessoire, avant de remettre le module sous tension ou en fonctionnement après l'installation ou le câblage. Si cette précaution n'est pas respectée, il y a risque d'électrocution.
- La température nominale du câble doit être d'au moins 80 ℃.
  Cette valeur peut varier en fonction des modules d'extension. Pour le détail, voir le manuel de l'utilisateur des modules d'extension.
- Respecter les précautions suivantes lors du câblage de la plaque à bornes à vis. Si cette précaution n'est pas respectée, l'utilisateur risque une électrocution et l'équipement risque de tomber en panne, de subir un court-circuit, une rupture de câble ou des dysfonctionnements, ou d'être endommagé.
  - La taille de l'extrémité du câble à mettre au rebut doit correspondre aux dimensions indiquées dans le manuel.
  - Le couple de serrage doit être conforme aux spécifications du manuel.
  - Serrer les vis à l'aide d'un tournevis cruciforme n° 2 (diamètre de 6 mm ou inférieur). S'assurer que le tournevis ne touche pas la cloison de la plaque à bornes.
- Respecter les précautions suivantes pour câbler correctement la plaque à bornes (type européen). Si cette précaution n'est pas respectée, l'utilisateur risque une électrocution et l'équipement risque de tomber en panne, de subir un court-circuit, une rupture de câble ou des dysfonctionnements, ou d'être endommagé.
  - La taille de l'extrémité du câble à mettre au rebut doit correspondre aux dimensions indiquées dans le manuel.
  - Le couple de serrage doit être conforme aux spécifications du manuel.
  - Torsader les extrémités des fils toronnés et vérifier qu'aucun fil n'est mal arrimé.
  - Ne pas souder ni plaquer les extrémités des câbles électriques.
  - Ne pas brancher plus de câbles ou câbles électriques de taille non spécifiée que le nombre indiqué.
  - Attacher les câbles électriques de sorte qu'ils ne pèsent directement ni sur la plaque à bornes, ni sur les pièces reliées.
- Respecter les précautions suivantes pour câbler correctement la plaque à bornes avec bride à ressort. Si cette précaution n'est pas respectée, l'utilisateur risque une électrocution et l'équipement risque de tomber en panne, de subir un court-circuit, une rupture de câble ou des dysfonctionnements, ou d'être endommagé.
  - La taille de l'extrémité du câble à mettre au rebut doit correspondre aux dimensions indiquées dans le manuel.
  - Torsader les extrémités des fils toronnés et vérifier qu'aucun fil n'est mal arrimé.
  - Ne pas souder ni plaquer les extrémités des câbles électriques.
  - Ne pas brancher plus de câbles ou câbles électriques de taille non spécifiée que le nombre indiqué.
  - Attacher les câbles électriques de sorte qu'ils ne pèsent directement ni sur la plaque à bornes, ni sur les pièces reliées.

[PRÉCAUTIONS DE CABLAGE]

⚠ ATTENTION

- Ne pas alimenter en externe les bornes [24+] et [24V] (alimentation électrique en 24 V cc) sur le module CPU ou les modules d'extension. Cela pourrait endommager le produit. Le module peut être alimenté même si une charge électronique dotée d'une alimentation de polarisation interne est connectée.
- Effectuer une mise à la terre de classe D (résistance de mise à la terre : 100 Ω ou moins) de la borne de mise à la terre sur le module CPU et les modules d'extension avec un câble de 2 ㎟ ou un câble plus épais.
  Ne pas utiliser une mise à la terre commune avec les systèmes électriques lourds.
- Connecter le câblage d'alimentation aux bornes dédiées décrites dans ce manuel. Si une alimentation en CA est connectée à une borne d'entrée/de sortie en CC ou à une borne d'alimentation en CC, l'automate programmable s'éteindra.
- Ne pas câbler les bornes libres en externe. Cela pourrait endommager le produit.
- Installer le module afin que la plaque à bornes, les connecteurs d'alimentation, les connecteurs d'E/S, les connecteurs de communication et les câbles de communication ne soient pas soumis à une force excessive. Si cette précaution n'est pas respectée, les câbles risquent d'être rompus ou endommagés, et l'automate programmable risque de ne plus fonctionner.
- Respecter les précautions suivantes afin d'éviter tout endommagement des machines ou tout accident dû au dysfonctionnement de l'automate programmable causé par l'envoi de données anormales à l'automate programmable en raison des effets du bruit.
  - Ne pas regrouper la ligne d'alimentation, la ligne de commande et les câbles de communication, et ne pas les placer près du circuit principal, de la ligne à haute tension, de la ligne de charge ni de la ligne d'alimentation. Il est recommandé de placer la ligne d'alimentation, la ligne de commande et les câbles de communication à au moins 100 mm du circuit principal, de la ligne à haute tension, de la ligne de charge ou de la ligne d'alimentation.
  - Mettre à la terre le blindage du câble ou du fil blindé à un seul endroit sur l'automate programmable. Ne pas pour autant utiliser une mise à la terre commune avec les systèmes électriques lourds.
  - Mettre à la terre le blindage du câble d'E/S analogique conformément aux manuels de chaque modèle. Toutefois, ne pas utiliser une mise à la terre commune avec les systèmes électriques lourds.

[PRÉCAUTIONS DE MISE EN SERVICE ET DE MAINTENANCE]

⚠AVERTISSEMENT

- Ne pas toucher aux bornes quand l'automate programmable est sous tension. Si cette précaution n'est pas respectée, il y a un risque d'électrocution ou de dysfonctionnements.
- Avant de nettoyer ou de resserrer les bornes, couper toutes les phases de l'alimentation en externe. Si cette précaution n'est pas respectée alors que le module est sous tension, il y a un risque d'électrocution.
- Avant de modifier le programme, d'exécuter une sortie forcée, ou de lancer ou d'arrêter l'automate programmable alors que le système est en fonctionnement, lire attentivement ce manuel et vérifier que la sécurité est assurée. Une erreur de manipulation peut endommager la machine ou provoquer des accidents.
- Ne pas modifier le programme dans l'automate programmable depuis deux périphériques ou plus en même temps (par exemple, depuis un outil d'ingénierie et un GOT). Si cette précaution n'est pas respectée, le programme de l'automate programmable risque d'être détruit ou de présenter des dysfonctionnements.
- Utiliser la batterie pour la sauvegarde de la mémoire conformément à ce manuel.
  - Utiliser la batterie uniquement aux fins spécifiées.
  - Raccorder la batterie correctement.
  - Ne pas charger, démonter, chauffer, mettre au feu, court-circuiter, connecter à l'envers, souder, avaler ni brûler la batterie, et ne soumettre la batterie à aucune force excessive (vibration, impact, chute, etc.).
  - Ne pas stocker ni utiliser la batterie à une température très élevée, ni l'exposer à la lumière directe du soleil.
  - Ne pas exposer le module à l'eau, le placer près d'un feu, ni toucher directement des fuites de liquide ou d'autres contenus.
  - Pour remplacer la batterie, utiliser notre produit spécifié (FX3U-32BL).
  - Lorsqu'une erreur de batterie se produit (la LED "BAT" s'allume en rouge), suivre la description de ce manuel.

  Une manipulation incorrecte de la batterie peut provoquer une génération excessive de chaleur, un éclatement, un départ de feu, une fuite de liquide ou une déformation, et entraîner des blessures, un incendie ou des pannes et des dysfonctionnements des installations et d'autres équipements.

[PRÉCAUTIONS DE MISE EN SERVICE ET DE MAINTENANCE]

⚠ATTENTION

- Ne pas démonter ni modifier l'automate programmable. Si cette précaution n'est pas respectée, un départ de feu, des pannes de l'équipement ou des dysfonctionnements peuvent survenir.
  Si le module doit être réparé, contacter votre représentant Mitsubishi Electric.
- Après la première utilisation de la carte mémoire SD, ne pas l'insérer/la retirer plus de 500 fois. Si cette précaution n'est pas respectée, le module risque de ne pas fonctionner correctement.
- Couper l'alimentation de l'automate programmable avant de brancher ou de débrancher une rallonge. Si cette précaution n'est pas respectée, l'équipement risque de ne plus fonctionner ou de ne plus fonctionner correctement.
- Couper l'alimentation de l'automate programmable avant de brancher ou de débrancher les appareils suivants. Si cette précaution n'est pas respectée, l'équipement risque de ne plus fonctionner ou de ne plus fonctionner correctement.
  - Appareils périphériques, carte d'extension, adaptateur d'extension et adaptateur de conversion de connecteur
  - Modules d'extension, module de conversion de bus et module de conversion de connecteur
  - Batterie
- Ne pas utiliser de produits chimiques pour le nettoyage.
- S'il est possible de toucher l'automate programmable dans le boîtier de commande lors de l'entretien, toujours se décharger de l'électricité statique pour éviter toute influence.
- Puisqu'il existe des risques, comme des risques de brûlures, ne pas toucher la surface de l'équipement à mains nues lorsqu'il fonctionne dans un environnement dont la température ambiante dépasse 50 ℃.

[PRÉCAUTIONS D'UTILISATION]

⚠ATTENTION

- Mettre en place un circuit de verrouillage de sécurité dans le programme pour garantir que le système dans son ensemble fonctionne toujours en toute sécurité avant d'exécuter la commande (de changement dans les données) de l'automate programmable en fonctionnement. Lire attentivement le manuel et s'assurer que tout est sécurisé avant l'envoi d'autres instructions (changement de programme, changement de paramètres, sortie forcée et changement d'état opérationnel) à l'automate programmable en fonctionnement. Une fausse manœuvre pourrait être à l'origine d'un accident ou de dégâts matériels.

[PRÉCAUTIONS DE MISE AU REBUT]

⚠ATTENTION

- Lors de sa mise au rebut, ce produit doit être traité comme un déchet industriel.
- Les batteries doivent être mises au rebut séparément des autres déchets et conformément à la réglementation locale. (Pour plus de détails sur la directive relative aux batteries dans les pays de l'UE, se reporter à ce manuel.)

[PRÉCAUTIONS DE TRANSPORT]

⚠ATTENTION

- Si l'automate programmable est transporté avec la batterie en option, allumer l'automate programmable avant l'expédition, vérifier que le mode batterie est défini à l'aide d'un paramètre et que la LED BAT est éteinte, et vérifier la durée de vie de la batterie. Si l'automate programmable est transporté alors que la LED BAT est allumée ou que la batterie est vide, les données sauvegardées par batterie peuvent être instables au cours du transport.
- L'automate programmable est un instrument de précision. Pendant le transport, éviter les chocs plus importants que ceux spécifiés dans les spécifications générales en utilisant des emballages spéciaux et des palettes atténuant les chocs. Le non-respect de cette consigne peut entraîner des défaillances de l'automate programmable. Après le transport, vérifier le fonctionnement de l’automate programmable et vérifier que la pièce à monter n’est pas endommagée, etc.
- Pour le transport des batteries au lithium, respecter les règlementations de transport requises. (Pour obtenir des détails sur les produits soumis à une réglementation, se reporter à ce manuel.)
- Les halogènes (comme le fluor, le chlore, le brome ou l'iode) contenus dans certains fumigènes utilisés pour désinfecter et traiter les emballages en bois contre les parasites peuvent détériorer le produit. Protéger le produit contre la pénétration des résidus de fumigènes ou envisager d'autres méthodes de traitement que la fumigation (traitement thermique par exemple). Une désinfection et un traitement antiparasite doivent être appliqués sur le bois brut avant façonnage.

INTRODUCTION

This manual describes the system configuration, specifications, installation, wiring, maintenance, and inspection of MELSEC iQ-F series programmable controllers.
Please read this manual and the relevant manuals and fully understand the specifications before attempting to use the module.
Also, please ensure that the end users read this manual.

Target modules

Item	Model
FX5S CPU module	FX5S-30MR/ES, FX5S-30MT/ES, FX5S-30MT/ESS, FX5S-40MR/ES, FX5S-40MT/ES, FX5S-40MT/ESS, FX5S-60MR/ES, FX5S-60MT/ES, FX5S-60MT/ESS, FX5S-80MR/ES*1, FX5S-80MT/ES*1, FX5S-80MT/ESS*1, FX5S-30MR/DS, FX5S-30MT/DS, FX5S-30MT/DSS, FX5S-40MR/DS, FX5S-40MT/DS, FX5S-40MT/DSS, FX5S-60MR/DS, FX5S-60MT/DS, FX5S-60MT/DSS, FX5S-80MR/DS*1, FX5S-80MT/DS*1, FX5S-80MT/DSS*1
FX5UJ CPU module	FX5UJ-24MR/ES, FX5UJ-24MT/ES, FX5UJ-24MT/ESS, FX5UJ-40MR/ES, FX5UJ-40MT/ES, FX5UJ-40MT/ESS, FX5UJ-60MR/ES, FX5UJ-60MT/ES, FX5UJ-60MT/ESS, FX5UJ-24MR/DS, FX5UJ-24MT/DS, FX5UJ-24MT/DSS, FX5UJ-40MR/DS, FX5UJ-40MT/DS, FX5UJ-40MT/DSS, FX5UJ-60MR/DS, FX5UJ-60MT/DS, FX5UJ-60MT/DSS
FX5U CPU module	FX5U-32MR/ES, FX5U-32MT/ES, FX5U-32MT/ESS, FX5U-64MR/ES, FX5U-64MT/ES, FX5U-64MT/ESS, FX5U-80MR/ES, FX5U-80MT/ES, FX5U-80MT/ESS, FX5U-32MR/DS, FX5U-32MT/DS, FX5U-32MT/DSS, FX5U-64MR/DS, FX5U-64MT/DS, FX5U-64MT/DSS, FX5U-80MR/DS, FX5U-80MT/DS, FX5U-80MT/DSS
FX5UC CPU module	FX5UC-32MT/D, FX5UC-32MT/DSS, FX5UC-32MT/DS-TS, FX5UC-32MT/DSS-TS, FX5UC-32MR/DS-TS, FX5UC-64MT/D, FX5UC-64MT/DSS, FX5UC-96MT/D, FX5UC-96MT/DSS
Input module	FX5-8EX/ES, FX5-16EX/ES, FX5-C16EX/D, FX5-C16EX/DS, FX5-C32EX/D, FX5-C32EX/DS, FX5-C32EX/DS-TS
Output module	FX5-8EYR/ES, FX5-8EYT/ES, FX5-8EYT/ESS, FX5-16EYR/ES, FX5-16EYT/ES, FX5-16EYT/ESS, FX5-C16EYR/D-TS, FX5-C16EYT/D, FX5-C16EYT/DSS, FX5-C32EYT/D, FX5-C32EYT/DSS, FX5-C32EYT/DSS-TS, FX5-C32EYT/D-TS
I/O module	FX5-16ER/ES, FX5-16ET/ES, FX5-16ET/ESS, FX5-C32ET/D, FX5-C32ET/DSS, FX5-C32ET/DS-TS, FX5-C32ET/DSS-TS
Powered input/output module	FX5-32ER/ES, FX5-32ET/ES, FX5-32ET/ESS, FX5-32ER/DS, FX5-32ET/DS, FX5-32ET/DSS
High-speed pulse input/output module	FX5-16ET/ES-H, FX5-16ET/ESS-H
Extension power supply module	FX5-1PSU-5V, FX5-C1PS-5V
Connector conversion module	FX5-CNV-IF, FX5-CNV-IFC
Expansion board	FX5-232-BD, FX5-485-BD, FX5-422-BD-GOT, FX5-SDCD
Expansion adapter	FX5-4A-ADP, FX5-4AD-ADP, FX5-4DA-ADP, FX5-4AD-PT-ADP, FX5-4AD-TC-ADP, FX5-232ADP, FX5-485ADP

*1 Area-specific model

Regarding use of this product

- This product has been manufactured as a general-purpose part for general industries, and has not been designed or manufactured to be incorporated in a device or system used in purposes related to human life.
- Before using the product for special purposes such as nuclear power, electric power, aerospace, medicine or passenger movement vehicles, consult Mitsubishi Electric.
- This product has been manufactured under strict quality control. However when installing the product where major accidents or losses could occur if the product fails, install appropriate backup or failsafe functions in the system.

Note

- If in doubt at any stage during the installation of the product, always consult a professional electrical engineer who is qualified and trained in the local and national standards. If in doubt about the operation or use, please consult the nearest Mitsubishi Electric representative.
- Since the examples indicated by this manual, technical bulletin, catalog, etc. are used as a reference and do not guarantee operation, please use the product after confirming for yourself the function and safety of the device and machine.
- The content, including specifications, in this manual may be changed for improvement without notice.
- The information in this manual has been carefully checked and is believed to be accurate; however, if you have noticed a doubtful point or a doubtful error, please contact your local Mitsubishi Electric representative. When doing so, please provide the manual number given at the end of this manual.

CONTENTS

SAFETY PRECAUTIONS 1
PRÉCAUTIONS DE SÉCURITÉ 10
INTRODUCTION 20
RELEVANT MANUALS 26
TERMS 27
GENERIC TERMS AND ABBREVIATIONS 27

CHAPTER 1 MODULE FEATURES 29

CHAPTER 2 SYSTEM CONFIGURATION 32

2.1 Overall Configuration 32
2.2 Configuration Device List 33
MELSEC iQ-F 34
FX3 extension module 40
2.3 System Configuration Specifications 41
Number of connected extension devices (FX5S CPU module) 42
Number of connected extension devices (FX5UJ CPU module) 43
Number of connected extension devices (FX5U CPU module) 45
Number of connected extension devices (FX5UC CPU module) 47
Modules with restrictions 49
Number of I/O points 52
Current consumption 56
2.4 Numbers and Assignment in System 60
Module input/output number 60
Module number of extension modules 60
2.5 Precautions 61
Selection of input/output type 61
Precautions for operating ambient temperature 61

CHAPTER 3 PART NAMES 63

3.1 CPU Module 63
FX5S CPU module 63
FX5UJ CPU module 66
FX5U CPU module 69
FX5UC CPU module 72
3.2 I/O Module 75
Input module, output module, I/O module 75
Powered input/output module 77
High-speed pulse input/output module 78
3.3 Extension Power Supply Module 79
3.4 Connector Conversion Module 81
3.5 SD Memory Card Module 82
3.6 SD Memory Card 82

CHAPTER 4 GENERAL SPECIFICATIONS 83

CHAPTER 5 CPU MODULE PERFORMANCE SPECIFICATIONS 85
5.1 CPU and Memory Specifications . . . 85
Number of device points . . . 87
5.2 Power Supply Specifications . . . 88
AC power supply . . . 88
DC power supply . . . 90
5.3 Input Specifications . . . 91
5.4 Output Specifications . . . 95
5.5 Input/Output Derating Curve . . . 99
5.6 Built-in Analog Specifications . . . 101
5.7 Positioning Specifications . . . 101
5.8 Communication Specifications . . . 102
Built-in Ethernet communication . . . 102
Built-in RS-485 communication . . . 103
5.9 Terminal Layout . . . 104
Built-in analog terminal . . . 104
Built-in Ethernet connector . . . 104
Built-in RS-485 terminal . . . 104
Power, input/output terminal block . . . 105
5.10 External Dimensions . . . 116
CHAPTER 6 I/O MODULE PERFORMANCE SPECIFICATIONS 122
6.1 Input Module . . . 122
Extension cable type . . . 122
Extension connector type . . . 124
6.2 Output Module . . . 126
Extension cable type . . . 126
Extension connector type . . . 128
6.3 I/O Module . . . 130
Extension cable type . . . 130
Extension connector type . . . 133
6.4 Powered I/O Module . . . 136
Extension cable type . . . 136
6.5 High-Speed Pulse Input/Output Module . . . 139
Extension cable type . . . 139
6.6 External Dimensions . . . 141
CHAPTER 7 EXTENSION POWER SUPPLY MODULE PERFORMANCE SPECIFICATIONS 144
7.1 Performance Specifications . . . 144
7.2 External Dimensions . . . 145
CHAPTER 8 CONNECTOR CONVERSION MODULE PERFORMANCE SPECIFICATIONS 146
8.1 Specifications . . . 146
8.2 External Dimensions . . . 146
CHAPTER 9 EXPANSION ADAPTER PERFORMANCE SPECIFICATIONS 148
9.1 Analog Adapter . . . 148
Power supply specifications . . . 148

Terminal layout . . . 148
External dimensions . . . 150
9.2 Communication Adapter . . . 151
Specifications . . . 151
Connector layout . . . 151
External dimensions . . . 152

CHAPTER 10 EXPANSION BOARD PERFORMANCE SPECIFICATIONS 153

10.1 Expansion Board for Communications . . . 153
Power supply specifications . . . 153
Connector layout . . . 153
External dimensions . . . 154
10.2 SD Memory Card Module . . . 154
External dimensions . . . 154

CHAPTER 11 SD MEMORY CARD PERFORMANCE SPECIFICATIONS 155

11.1 Handling of the SD Memory Card . . . 155
11.2 Formatting . . . 155

CHAPTER 12 BATTERY PERFORMANCE SPECIFICATIONS 157

12.1 Battery Application . . . 157
12.2 Battery Life . . . 157

CHAPTER 13 FUNCTION LIST 159

CHAPTER 14 INSTALLATION 162

14.1 Installation Positions . . . 162
Installation positions in a control panel . . . 162
Layout in control panel . . . 163
14.2 Installation Methods . . . 164
Preparation for installation . . . 165
Installing on DIN rail . . . 166
Installing directly . . . 167
14.3 Method for Connection of Extension Devices . . . 169
Connection of an expansion board (communication board) . . . 169
Connection of an expansion board (SD memory card module) . . . 170
Connection of an expansion adapter . . . 171
Connection of an extension module (extension cable type) . . . 172
Connection of an extension module (extension connector type) . . . 173
Connection of an extended extension cable and connector conversion adapter . . . 174
Connection of an FX3 extension module . . . 174

CHAPTER 15 WIRING 175

15.1 Wiring Procedure . . . 175
15.2 Preparation of Wiring Components . . . 176
Power cables . . . 176
Connector . . . 178
Screw terminal block . . . 180
European-type terminal block . . . 182
Spring clamp terminal block . . . 184

15.3 Grounding . . . 187
15.4 Power Supply Wiring . . . 188
AC power supply wiring . . . 188
DC power supply wiring . . . 190
15.5 Input Wiring . . . 191
24VDC input (Sink and source input type) . . . 191
Input wiring example . . . 198
Input wiring examples of terminal blocks . . . 205
15.6 Output Wiring . . . 207
Relay output . . . 207
Transistor output . . . 210
Triac output . . . 214
Output wiring example . . . 216
Output wiring examples of terminal blocks . . . 222
15.7 Analog Wiring . . . 226
CPU module built-in analog function . . . 226
Analog adapter . . . 227
15.8 Wiring Examples for Various Uses . . . 230
Positioning function . . . 230
Communication function . . . 230
High-speed counter . . . 231
Interruption . . . 237
Digital switch . . . 240
Input matrix . . . 244
Seven segment with latch . . . 246

CHAPTER 16 PROCEDURES BEFORE OPERATION 250

16.1 Overview . . . 250
16.2 Preliminary Inspection . . . 251
16.3 Installing a Battery . . . 252
FX5U CPU module . . . 252
FX5UC CPU module . . . 253
16.4 Inserting and Removing the SD Memory Card . . . 254
16.5 Creating a Project . . . 257
16.6 Connecting a Personal Computer . . . 259
Connecting to a peripheral device connector (Ethernet or USB) of the CPU module . . . 259
When Ethernet cable is used (direct connection) . . . 260
When Ethernet cable is used (connection via a hub) . . . 261
When RS-232C cable is used . . . 263
When USB cable is used . . . 264
16.7 Initializing the CPU Module . . . 265
16.8 Setting Parameters . . . 265
16.9 Programming . . . 267
Registering labels . . . 267
Inserting program elements . . . 268
Inserting program elements by key input . . . 269
Special relay for low battery voltage . . . 269
16.10 Converting the Program . . . 270
16.11 Saving the Project . . . 270
16.12 Writing Data to the CPU Module . . . 270

16.13 Resetting the CPU Module . . . 271
16.14 Executing the Program . . . 271
16.15 Monitoring the Program . . . 272

CHAPTER 17 TROUBLESHOOTING 274

17.1 Troubleshooting Procedure . . . 274
17.2 Checking with LEDs . . . 274
Checking the PWR LED . . . 274
Checking the BAT LED . . . 274
Checking the ERR LED . . . 275
Checking the P.RUN LED . . . 275
17.3 Troubleshooting Using the Engineering Tool . . . 276
System monitor . . . 276
Module diagnostics . . . 277
Event history . . . 278
17.4 Error Status and Operations on Occurrence of an Error . . . 279
17.5 Backing Up the Data . . . 280
17.6 Clearing Errors . . . 280
17.7 Troubleshooting for Each Symptom . . . 281
I/O operation (CPU module, I/O module) . . . 281
Writing/reading data . . . 282
Boot operation . . . 283

CHAPTER 18 MAINTENANCE AND INSPECTION 284

18.1 Daily Inspection . . . 284
18.2 Periodic Inspection . . . 284
Battery replacement . . . 285

APPENDIX 287

Appendix 1 How to Check the Date of Manufacture . . . 287
Appendix 2 Standards . . . 289
Compliance with EU Directive (CE marking) . . . 289
Compliance with UL and cUL standards . . . 292
Compliance with UKCA marking . . . 292
Appendix 3 Precautions for Battery Transportation . . . 293
Control-subject product . . . 293
Precautions for transportation . . . 293
Appendix 4 Handling of Batteries and Devices with Built-in Batteries in EU Member States . . . 294
Disposal precautions . . . 294
Exportation precautions . . . 294
Appendix 5 Versions That Support Extension Devices . . . 295

INDEX 300

REVISIONS . . . 302
WARRANTY . . . 303
INFORMATION AND SERVICES . . . 304
TRADEMARKS . . . 304

RELEVANT MANUALS

Hardware and maintenance and inspection

Manual name [manual number]	Description
MELSEC iQ-F FX5S/FX5UJ/FX5U/FX5UC User's Manual (Hardware) [SH-082452ENG] (this manual)	Describes the details of hardware of the CPU module, including performance specifications, wiring, installation, and maintenance.

Function

Manual name [manual number]	Description
MELSEC iQ-F FX5 User's Manual (Application) [JY997D55401]	Describes the basic knowledge required for program design, functions of the CPU module, devices/labels, and parameters.
MELSEC iQ-F FX5 User's Manual (Communication) [SH-082625ENG]	Describes the communication function of the CPU module built-in and the Ethernet module.

Programming

Manual name [manual number]	Description
MELSEC iQ-F FX5 Programming Manual (Program Design) [JY997D55701]	Describes specifications of ladders, ST, FBD/LD, and other programs and labels.
MELSEC iQ-F FX5 Programming Manual (Instructions, Standard Functions/ Function Blocks) [JY997D55801]	Describes the specifications of instructions and functions that can be used in programs.

Software

Manual name [manual number]	Description
GX Works3 Operating Manual [SH-081215ENG]	Describes the system configuration, parameter settings, and online operations of GX Works3.

TERMS

Unless otherwise specified, this manual uses the following terms.

Term	Description
Engineering tool	The product name of the software package for the MELSEC programmable controllers
GX Works3	The product name of the software package, SWnDND-GXW3, for the MELSEC programmable controllers (The 'n' represents a version.)
OPC	An abbreviation for OLE for Process Control. Standards for performing interoperation aiming at safe and reliable data exchange in such industries as industrial automation.
OPC UA	An abbreviation for OPC Unified Architecture. A non-platform-dependent service-oriented architecture in which the functionality of each OPC Classic specification is all integrated into an expandable framework.
Sink input	Sink input means a DC input signal with current-flow from the input (X) terminal. (☞ Page 191 Input Wiring)
Source input	Source input means a DC input signal with current-flow into the input (X) terminal. (☞ Page 191 Input Wiring)

GENERIC TERMS AND ABBREVIATIONS

Unless otherwise specified, this manual uses the following generic terms and abbreviations.

Term	Description
Analog adapter	A generic term for FX5-4A-ADP, FX5-4AD-ADP, FX5-4DA-ADP, FX5-4AD-PT-ADP, and FX5-4AD-TC-ADP
Battery	FX3U-32BL
Bus conversion module	A generic term for FX5-CNV-BUS and FX5-CNV-BUSC
Communication adapter	A generic term for FX5-232ADP and FX5-485ADP
Communication board	A generic term for FX5-232-BD, FX5-485-BD, and FX5-422-BD-GOT
Connector conversion adapter	A different name for FX5-CNV-BC
Connector conversion module	A generic term for FX5-CNV-IF and FX5-CNV-IFC
Expansion adapter	A generic term for FX5-4A-ADP, FX5-4AD-ADP, FX5-4DA-ADP, FX5-4AD-PT-ADP, FX5-4AD-TC-ADP, FX5-232ADP, and FX5-485ADP
Expansion board	A generic term for FX5-232-BD, FX5-485-BD, FX5-422-BD-GOT, and FX5-SDCD
Extended extension cable	A generic term for FX5-30EC and FX5-65EC
Extension module	A generic term for I/O modules, extension power supply modules, and intelligent function modules
Extension power supply module	A generic term for FX5-1PSU-5V, FX5-C1PS-5V, and FX3U-1PSU-5V
FX3 extension module	A generic term for FX3U-1PSU-5V, FX3U-4AD, FX3U-4DA, FX3U-4LC, FX3U-1PG, FX3U-2HC, FX3U-16CCL-M, FX3U-64CCL, FX3U-128ASL-M, and FX3U-32DP
FX3 intelligent function module	A generic term for FX3U-4AD, FX3U-4DA, FX3U-4LC, FX3U-1PG, FX3U-2HC, FX3U-16CCL-M, FX3U-64CCL, FX3U-128ASL-M, and FX3U-32DP
FX5 CPU module	A generic term for FX5S CPU module, FX5UJ CPU module, FX5U CPU module, and FX5UC CPU module
FX5 extension module	A generic term for I/O modules, FX5 extension power supply modules, FX5 intelligent function modules, and FX5 safety extension modules
FX5 extension power supply module	A generic term for FX5-1PSU-5V and FX5-C1PS-5V
FX5 intelligent function module	A generic term for FX5-4AD, FX5-4DA, FX5-8AD, FX5-4LC, FX5-2HC/ES, FX5-20PG-P, FX5-20PG-D, FX5-40SSC-G, FX5-80SSC-G, FX5-40SSC-S, FX5-80SSC-S, FX5-ENET, FX5-ENET/IP, FX5-EIP, FX5-CCLGN-MS, FX5-CCLIEF, FX5-CCL-MS, FX5-ASL-M, FX5-DP-M, and FX5-OPC
FX5 safety extension module	A generic term for FX5-SF-MU4T5 and FX5-SF-8DI4
FX5S CPU module	A generic term for FX5S-30MR/ES, FX5S-30MT/ES, FX5S-30MT/ESS, FX5S-40MR/ES, FX5S-40MT/ES, FX5S-40MT/ESS, FX5S-60MR/ES, FX5S-60MT/ES, FX5S-60MT/ESS, FX5S-80MR/ES*1, FX5S-80MT/ES*1, FX5S-80MT/ESS*1, FX5S-30MR/DS, FX5S-30MT/DS, FX5S-30MT/DSS, FX5S-40MR/DS, FX5S-40MT/DS, FX5S-40MT/DSS, FX5S-60MR/DS, FX5S-60MT/DS, FX5S-60MT/DSS, FX5S-80MR/DS*1, FX5S-80MT/DS*1, and FX5S-80MT/DSS*1
FX5U CPU module	A generic term for FX5U-32MR/ES, FX5U-32MT/ES, FX5U-32MT/ESS, FX5U-64MR/ES, FX5U-64MT/ES, FX5U-64MT/ESS, FX5U-80MR/ES, FX5U-80MT/ES, FX5U-80MT/ESS, FX5U-32MR/DS, FX5U-32MT/DS, FX5U-32MT/DSS, FX5U-64MR/DS, FX5U-64MT/DS, FX5U-64MT/DSS, FX5U-80MR/DS, FX5U-80MT/DS, and FX5U-80MT/DSS
FX5UC CPU module	A generic term for FX5UC-32MT/D, FX5UC-32MT/DSS, FX5UC-64MT/D, FX5UC-64MT/DSS, FX5UC-96MT/D, FX5UC-96MT/DSS, FX5UC-32MT/DS-TS, FX5UC-32MT/DSS-TS, and FX5UC-32MR/DS-TS
FX5UJ CPU module	A generic term for FX5UJ-24MR/ES, FX5UJ-24MT/ES, FX5UJ-24MT/ESS, FX5UJ-40MR/ES, FX5UJ-40MT/ES, FX5UJ-40MT/ESS, FX5UJ-60MR/ES, FX5UJ-60MT/ES, FX5UJ-60MT/ESS, FX5UJ-24MR/DS, FX5UJ-24MT/DS, FX5UJ-24MT/DSS, FX5UJ-40MR/DS, FX5UJ-40MT/DS, FX5UJ-40MT/DSS, FX5UJ-60MR/DS, FX5UJ-60MT/DS, and FX5UJ-60MT/DSS

Term	Description
High-speed pulse input/output module	A generic term for FX5-16ET/ES-H and FX5-16ET/ESS-H
I/O module	A generic term for input modules, output modules, input/output modules, powered input/output modules, and high-speed pulse input/output modules
Input/output module	A generic term for FX5-16ER/ES, FX5-16ET/ES, FX5-16ET/ESS, FX5-C32ET/D, FX5-C32ET/DSS, FX5-C32ET/DS-TS, and FX5-C32ET/DSS-TS
Input module	A generic term for FX5-8EX/ES, FX5-16EX/ES, FX5-C16EX/D, FX5-C16EX/DS, FX5-C32EX/D, FX5-C32EX/DS, and FX5-C32EX/DS-TS
Intelligent function module	A generic term for FX5 intelligent function modules and FX3 intelligent function modules
Intelligent module	An abbreviation for intelligent function modules
Output module	A generic term for FX5-8EYR/ES, FX5-8EYT/ES, FX5-8EYT/ESS, FX5-16EYR/ES, FX5-16EYT/ES, FX5-16EYT/ESS, FX5-C16EYT/D, FX5-C16EYT/DSS, FX5-C16EYR/D-TS, FX5-C32EYT/D, FX5-C32EYT/DSS, FX5-C32EYT/D-TS, and FX5-C32EYT/DSS-TS
Peripheral	A generic term for engineering tools and GOTs
Powered input/output module	A generic term for FX5-32ER/ES, FX5-32ET/ES, FX5-32ET/ESS, FX5-32ER/DS, FX5-32ET/DS, and FX5-32ET/DSS
SD memory card	A generic term for NZ1MEM-2GBSD, NZ1MEM-4GBSD, NZ1MEM-8GBSD, and NZ1MEM-16GBSD memory cards An abbreviation for Secure Digital Memory Card. Device that stores data using flash memory.

*1 Area-specific model

1 MODULE FEATURES

CPU module

The CPU module incorporates a CPU, input and output terminals, and a power supply.

The following table lists the types of CPU modules.

CPU module	Features
FX5S CPU module	The FX5S CPU module is standard equipped with a built-in USB (Mini-B) connector and built-in Ethernet port. This module is compact and condenses the high basic performance, such as the positioning and IoT functions, and ease of use. This facilitates configuring user systems.
FX5UJ CPU module	The FX5UJ CPU module is standard equipped with an SD memory card slot, built-in USB (Mini-B) connector, and built-in Ethernet port. This module is also equipped with built-in functions such as positioning and a high-speed counter, is packed with a variety of performances, and is easy to use.
FX5U CPU module	The FX5U CPU module is standard equipped with analog, communication, and high-speed input/output terminals, and expanding a system is easy with an expansion board and expansion adapter. In addition, even when an intelligent function module is used, this module can maximize the power of extension devices.
FX5UC CPU module	The FX5UC CPU module is compact and easy to use, and helps downsize various devices.

The following table lists major differences among the CPU module types.

○: Applicable ×: Inapplicable

Item		FX5S CPU module				FX5UJ CPU module			FX5U CPU module			FX5UC CPU module		
External appearance		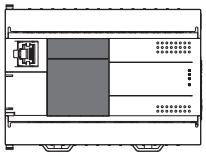				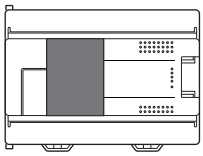			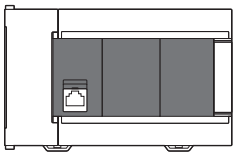			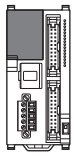 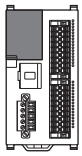		
■Hardware specifications														
Power supply specifications	AC power supply	○				○			○			×		
	DC power supply	○				○			○			○		
Total number of I/O points		30 points	40 points	60 points	80 points*1	24 points	40 points	60 points	32 points	64 points	80 points	32 points	64 points	96 points
Number of input points		16 points	24 points	36 points	48 points*1	14 points	24 points	36 points	16 points	32 points	40 points	16 points	32 points	48 points
Number of output points		14 points	16 points	24 points	32 points*1	10 points	16 points	24 points	16 points	32 points	40 points	16 points	32 points	48 points
Input/output connection type	Screw terminal block	○				○			○			×		
	Connector	×				×			×			○		
	Spring clamp terminal block	×				×			×			○		
Connection of extension modules		×				○			○			○		
Connection of expansion adapters		○				○			○			○		
Connection of expansion boards		○				○			○			×		
Communication connector	Ethernet	○				○			○			○		
	RS-485	×				×			○			○		
	USB	○				○			×			×		
SD memory card slot		×*2				○			○			○		
Built-in analog I/O		×				×			○			×		
■Software specifications														
Program capacity		48k steps maximum				48k steps maximum			128k steps maximum			128k steps maximum		
Number of I/O points		80 points maximum				256 points maximum			384 points maximum			384 points maximum		
Total number of points including number of remote I/O points		80 points maximum				256 points maximum			512 points maximum			512 points maximum		

*1 Area-specific model

*2 An SD memory card can be used by using an SD memory card module that is sold separately.

Extension module

Extension modules include I/O modules for increasing the number of input points and number of output points, and intelligent function modules that can expand the network and positioning functions. Extension modules are connected on the right side of the CPU module.

The two connection types, extension cable type and extension connector type, are provided for extension modules.

Extension cable type	Extension connector type
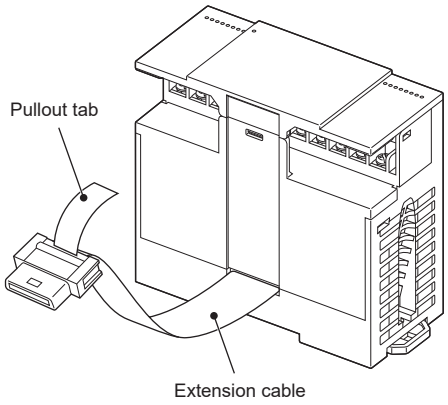	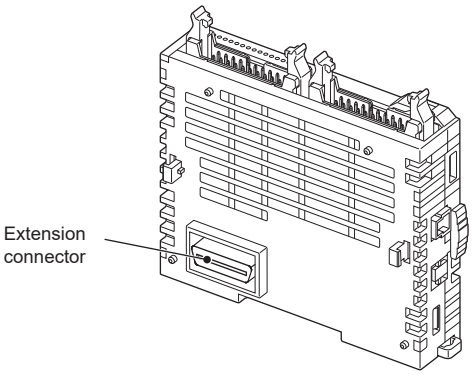

To connect an extension connector type module to an extension cable type module, a connector conversion module (FX5-CNV-IF) is required.

In the same manner, to connect an extension cable type module to an extension connector type module, a connector conversion module (FX5-CNV-IFC) is required.

■I/O module

The I/O module is used to expand inputs/outputs. Powered input/output modules and high-speed pulse input/output modules are also available.

■Intelligent function module

The intelligent function module is a module that has functions other than input/output, such as the network and positioning functions.

For details, refer to the user's manual for each module.

■FX5 safety extension module

The FX5 safety extension module is used to configure a safety control system.

For details, refer to the following.

📖MELSEC iQ-F FX5 Safety Extension Module User's Manual

■Extension power supply module

The extension power supply module is an added module when the built-in power supply of the CPU module is insufficient.

■Connector conversion module

The connector conversion module is used to convert an extension cable type module to an extension connector type module or an extension connector type to an extension cable type.

■Bus conversion module

The bus conversion module is used to connect an FX3 extension module.

For details on the FX3 extension modules that can be connected, refer to the following.

☞ Page 40 FX3 extension module

Expansion board

The expansion board is used to expand functions and is connected to the front face of the CPU module.

For details, refer to the following.

☞ Page 153 EXPANSION BOARD PERFORMANCE SPECIFICATIONS

Expansion adapter

The expansion adapter is used to expand functions and is connected on the left side of the CPU module.

For details, refer to the following.

☞ Page 148 EXPANSION ADAPTER PERFORMANCE SPECIFICATIONS

For details on the functions, refer to the following.

MELSEC iQ-F FX5 User's Manual (Application)

MELSEC iQ-F FX5 User's Manual (Communication)

Extended extension cable

The extended extension cable is used to install the FX5 extension module (extension cable type) at a remote location.

Connector conversion adapter

This connector conversion adapter is used to connect an extended extension cable to an extension cable type module (except for the FX5-1PSU-5V and powered input/output modules).

2 SYSTEM CONFIGURATION

This chapter describes the system configuration of the MELSEC iQ-F series.

2.1 Overall Configuration

The MELSEC iQ-F series programmable controller configures a system by connecting extension modules and expansion adapter to the CPU module.
In addition, by using bus conversion modules, FX3 extension modules can be connected.

Ex.
System configuration with the FX5U CPU module

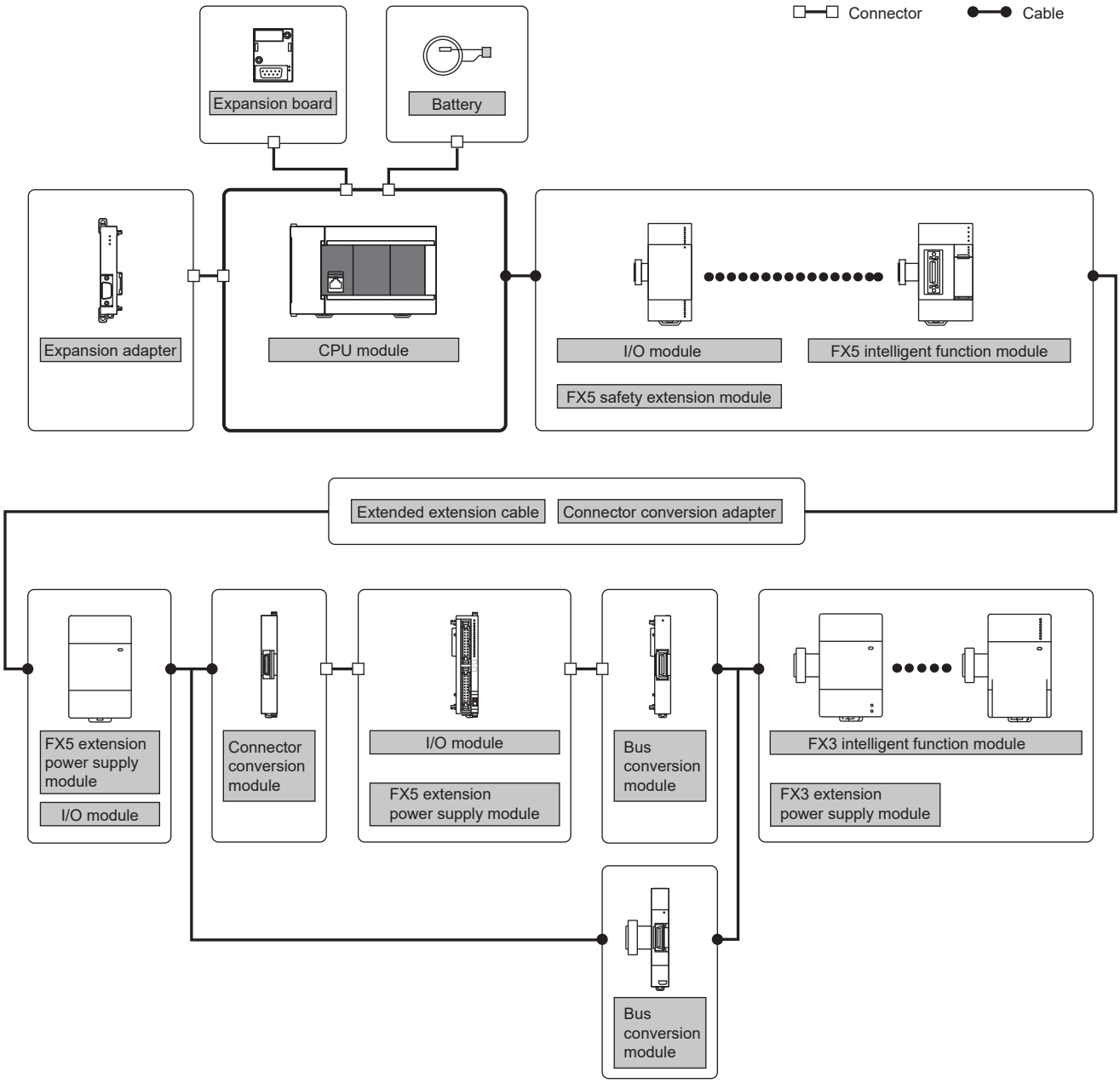

2.2 Configuration Device List

This section describes the devices that are configured into a MELSEC iQ-F series system.
Depending on the combinations, the firmware version of each CPU module and the firmware version and functions of each module have restrictions. Refer to manuals for each module as well.
For details on modules not described in this section, refer to manuals for each module.

Module model name

The following shows the model name system for CPU modules and I/O modules.

FX5U - □ 32 M T / D S S - □

❶ ❷ ❸ ❹ ❺ ❻ ❼ ❽ ❾

No.	Description	Details
❶	CPU module category	• S: FX5S CPU module • UJ: FX5UJ CPU module • U: FX5U CPU module • UC: FX5UC CPU module
❷	Type category	No symbol: Extension cable type C: Extension connector type
❸	Total number of I/O points	8, 16, 24, 30, 32, 40, 60, 64, 80, 96, and other applicable numbers of points
❹	Module category	• M: CPU module • E: I/O combined module • EX: Input module • EY: Output module
❺	Output type	• R: Relay output • T: Transistor output
❻	Power supply specifications	• E: AC power supply • D: DC power supply
❼	Input type	• No symbol: Sink type • S: Sink/source type
❽	Transistor output type	• No symbol: Sink type • S: Source type
❾	Other symbols	• No symbol: No other information • TS: Spring clamp terminal block • H: High-speed input/output function expansion

Point

The model name can be checked on the nameplate on the right side, but the model name (abbreviation) can be checked in the following locations as well.

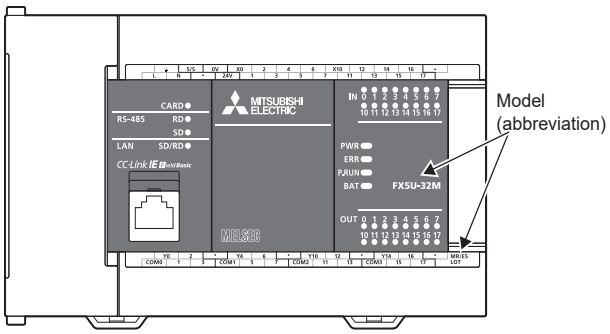

MELSEC iQ-F

For devices other than CPU modules, the following tables list whether they can be used by each CPU module.

○: Can be used, ×: Cannot be used

AC: AC power supply, DC: DC power supply

CPU module

Product	Power supply specifications	Input type	Output type	Number of input points	Number of output points	Model
FX5S CPU module	AC power supply	Sink/source	Relay	16 points	14 points	FX5S-30MR/ES
				24 points	16 points	FX5S-40MR/ES
				36 points	24 points	FX5S-60MR/ES
				48 points	32 points	FX5S-80MR/ES*1
			Transistor (sink)	16 points	14 points	FX5S-30MT/ES
				24 points	16 points	FX5S-40MT/ES
				36 points	24 points	FX5S-60MT/ES
				48 points	32 points	FX5S-80MT/ES*1
			Transistor (source)	16 points	14 points	FX5S-30MT/ESS
				24 points	16 points	FX5S-40MT/ESS
				36 points	24 points	FX5S-60MT/ESS
				48 points	32 points	FX5S-80MT/ESS*1
	DC power supply	Sink/source	Relay	16 points	14 points	FX5S-30MR/DS
				24 points	16 points	FX5S-40MR/DS
				36 points	24 points	FX5S-60MR/DS
				48 points	32 points	FX5S-80MR/DS*1
			Transistor (sink)	16 points	14 points	FX5S-30MT/DS
				24 points	16 points	FX5S-40MT/DS
				36 points	24 points	FX5S-60MT/DS
				48 points	32 points	FX5S-80MT/DS*1
			Transistor (source)	16 points	14 points	FX5S-30MT/DSS
				24 points	16 points	FX5S-40MT/DSS
				36 points	24 points	FX5S-60MT/DSS
				48 points	32 points	FX5S-80MT/DSS*1
FX5UJ CPU module	AC power supply	Sink/source	Relay	14 points	10 points	FX5UJ-24MR/ES
				24 points	16 points	FX5UJ-40MR/ES
				36 points	24 points	FX5UJ-60MR/ES
			Transistor (sink)	14 points	10 points	FX5UJ-24MT/ES
				24 points	16 points	FX5UJ-40MT/ES
				36 points	24 points	FX5UJ-60MT/ES
			Transistor (source)	14 points	10 points	FX5UJ-24MT/ESS
				24 points	16 points	FX5UJ-40MT/ESS
				36 points	24 points	FX5UJ-60MT/ESS
	DC power supply	Sink/source	Relay	14 points	10 points	FX5UJ-24MR/DS
				24 points	16 points	FX5UJ-40MR/DS
				36 points	24 points	FX5UJ-60MR/DS
			Transistor (sink)	14 points	10 points	FX5UJ-24MT/DS
				24 points	16 points	FX5UJ-40MT/DS
				36 points	24 points	FX5UJ-60MT/DS
			Transistor (source)	14 points	10 points	FX5UJ-24MT/DSS
				24 points	16 points	FX5UJ-40MT/DSS
				36 points	24 points	FX5UJ-60MT/DSS

Product	Power supply specifications	Input type	Output type	Number of input points	Number of output points	Model
FX5U CPU module	AC power supply	Sink/source	Relay	16 points	16 points	FX5U-32MR/ES
				32 points	32 points	FX5U-64MR/ES
				40 points	40 points	FX5U-80MR/ES
			Transistor (sink)	16 points	16 points	FX5U-32MT/ES
				32 points	32 points	FX5U-64MT/ES
				40 points	40 points	FX5U-80MT/ES
			Transistor (source)	16 points	16 points	FX5U-32MT/ESS
				32 points	32 points	FX5U-64MT/ESS
				40 points	40 points	FX5U-80MT/ESS
	DC power supply	Sink/source	Relay	16 points	16 points	FX5U-32MR/DS
				32 points	32 points	FX5U-64MR/DS
				40 points	40 points	FX5U-80MR/DS
			Transistor (sink)	16 points	16 points	FX5U-32MT/DS
				32 points	32 points	FX5U-64MT/DS
				40 points	40 points	FX5U-80MT/DS
			Transistor (source)	16 points	16 points	FX5U-32MT/DSS
				32 points	32 points	FX5U-64MT/DSS
				40 points	40 points	FX5U-80MT/DSS
FX5UC CPU module	DC power supply	Sink	Transistor (sink)	16 points	16 points	FX5UC-32MT/D
				32 points	32 points	FX5UC-64MT/D
				48 points	48 points	FX5UC-96MT/D
		Sink/source	Relay	16 points	16 points	FX5UC-32MR/DS-TS
			Transistor (sink)	16 points	16 points	FX5UC-32MT/DS-TS
			Transistor (source)	16 points	16 points	FX5UC-32MT/DSS, FX5UC-32MT/DSS-TS
				32 points	32 points	FX5UC-64MT/DSS
				48 points	48 points	FX5UC-96MT/DSS

*1 Area-specific model

I/O module

■Extension cable type

Product	Input type	Output type	Number of input points	Number of output points	Model	If usable by each CPU module						
						FX5S		FX5UJ		FX5U		FX5UC
						AC	DC	AC	DC	AC	DC	
Input module	Sink/source	—	8 points	—	FX5-8EX/ES	×	×	○	○	○	○	○
			16 points		FX5-16EX/ES	×	×	○	○	○	○	○
Output module	—	Relay	—	8 points	FX5-8EYR/ES	×	×	○	○	○	○	○
				16 points	FX5-16EYR/ES	×	×	○	○	○	○	○
		Transistor (sink)	—	8 points	FX5-8EYT/ES	×	×	○	○	○	○	○
				16 points	FX5-16EYT/ES	×	×	○	○	○	○	○
		Transistor (source)	—	8 points	FX5-8EYT/ESS	×	×	○	○	○	○	○
				16 points	FX5-16EYT/ESS	×	×	○	○	○	○	○
I/O module	Sink/source	Relay	8 points	8 points	FX5-16ER/ES	×	×	○	○	○	○	○
		Transistor (sink)	8 points	8 points	FX5-16ET/ES	×	×	○	○	○	○	○
		Transistor (source)	8 points	8 points	FX5-16ET/ESS	×	×	○	○	○	○	○
Powered input/ output module	Sink/source	Relay	16 points	16 points	FX5-32ER/ES	×	×	○	×	○	×	×
					FX5-32ER/DS	×	×	×	○	×	○	○
		Transistor (sink)			FX5-32ET/ES	×	×	○	×	○	×	×
					FX5-32ET/DS	×	×	×	○	×	○	○
		Transistor (source)			FX5-32ET/ESS	×	×	○	×	○	×	×
					FX5-32ET/DSS	×	×	×	○	×	○	○
High-speed pulse input/ output module	Sink/source	Transistor (sink)	8 points	8 points	FX5-16ET/ES-H	×	×	○	○	○	○	○
		Transistor (source)			FX5-16ET/ESS-H	×	×	○	○	○	○	○

■Extension connector type

Product	Input type	Output type	Number of input points	Number of output points	Model	If usable by each CPU module						
						FX5S		FX5UJ		FX5U		FX5UC
						AC	DC	AC	DC	AC	DC	
Input module	Sink	—	16 points	—	FX5-C16EX/D	×	×	○	○	○	○	○
			32 points	—	FX5-C32EX/D	×	×	○	○	○	○	○
	Sink/source	—	16 points	—	FX5-C16EX/DS	×	×	○	○	○	○	○
			32 points	—	FX5-C32EX/DS, FX5-C32EX/DS-TS	×	×	○	○	○	○	○
Output module	—	Relay	—	16 points	FX5-C16EYR/D-TS	×	×	○	○	○	○	○
		Transistor (sink)	—	16 points	FX5-C16EYT/D	×	×	○	○	○	○	○
			—	32 points	FX5-C32EYT/D, FX5-C32EYT/D-TS	×	×	○	○	○	○	○
	—	Transistor (source)	—	16 points	FX5-C16EYT/DSS	×	×	○	○	○	○	○
			—	32 points	FX5-C32EYT/DSS, FX5-C32EYT/DSS-TS	×	×	○	○	○	○	○
I/O module	Sink	Transistor (sink)	16 points	16 points	FX5-C32ET/D	×	×	○	○	○	○	○
	Sink/source	Transistor (sink)	16 points	16 points	FX5-C32ET/DS-TS	×	×	○	○	○	○	○
		Transistor (source)	16 points	16 points	FX5-C32ET/DSS, FX5-C32ET/DSS-TS	×	×	○	○	○	○	○

Extension power supply module

■Extension cable type

Product	Model	If usable by each CPU module						
		FX5S		FX5UJ		FX5U		FX5UC
		AC	DC	AC	DC	AC	DC	
Extension power supply module	FX5-1PSU-5V	×	×	○	×	○	×	×

■Extension connector type

Product	Model	If usable by each CPU module						
		FX5S		FX5UJ		FX5U		FX5UC
		AC	DC	AC	DC	AC	DC	
Extension power supply module	FX5-C1PS-5V	×	×	×	○	×	○	○

Intelligent function module

Product	Model	If usable by each CPU module						
		FX5S		FX5UJ		FX5U		FX5UC
		AC	DC	AC	DC	AC	DC	
Analog input module	FX5-4AD	×	×	○	○	○	○	○
Analog output module	FX5-4DA	×	×	○	○	○	○	○
Multiple input module	FX5-8AD	×	×	○	○	○	○	○
Temperature controller module	FX5-4LC	×	×	○	○	○	○	○
High-speed counter module	FX5-2HC/ES	×	×	○	○	○	○	○
Positioning module	FX5-20PG-P, FX5-20PG-D	×	×	○	○	○	○	○
Simple Motion module	FX5-40SSC-S, FX5-80SSC-S	×	×	○	○	○	○	○
Motion module	FX5-40SSC-G, FX5-80SSC-G	×	×	×	×	○	○	○
Ethernet module	FX5-ENET, FX5-ENET/IP	×	×	○	○	○	○	○
EtherNet/IP module	FX5-EIP	×	×	○	○	○	○	○
OPC UA module	FX5-OPC	×	×	×	×	○	○	○
CC-Link IE TSN master/local module	FX5-CCLGN-MS	×	×	○	○	○	○	○
CC-Link IE Field Network intelligent device station module	FX5-CCLIEF	×	×	○	○	○	○	○
CC-Link system master/intelligent device module	FX5-CCL-MS	×	×	○	○	○	○	○
AnyWireASLINK system master module	FX5-ASL-M	×	×	○	○	○	○	○
PROFIBUS-DP master module	FX5-DP-M	×	×	○	○	○	○	○

Connector conversion module

Product	Model	If usable by each CPU module						
		FX5S		FX5UJ		FX5U		FX5UC
		AC	DC	AC	DC	AC	DC	
Connector conversion module	FX5-CNV-IF	×	×	○	○	○	○	×
	FX5-CNV-IFC	×	×	×	×	×	×	○

Safety extension module

Product	Model	If usable by each CPU module						
		FX5S		FX5UJ		FX5U		FX5UC
		AC	DC	AC	DC	AC	DC	
Safety main module	FX5-SF-MU4T5	×	×	○	○	○	○	○
Safety input expansion module	FX5-SF-8DI4	×	×	○	○	○	○	○

Bus conversion module

Product	Model	If usable by each CPU module						
		FX5S		FX5UJ		FX5U		FX5UC
		AC	DC	AC	DC	AC	DC	
Bus conversion module	FX5-CNV-BUS, FX5-CNV-BUSC	×	×	×	×	○	○	○

Extended extension cable and connector conversion adapter

Product	Model	If usable by each CPU module						
		FX5S		FX5UJ		FX5U		FX5UC
		AC	DC	AC	DC	AC	DC	
Extended extension cable	FX5-30EC, FX5-65EC	×	×	○	○	○	○	○
Connector conversion adapter	FX5-CNV-BC	×	×	○	○	○	○	○

Expansion board

Product	Model	If usable by each CPU module						
		FX5S		FX5UJ		FX5U		FX5UC
		AC	DC	AC	DC	AC	DC	
Expansion board for RS-232C communications	FX5-232-BD	○	○	○	○	○	○	×
Expansion board for RS-485 communications	FX5-485-BD	○	○	○	○	○	○	×
Expansion board for RS-422 communications	FX5-422-BD-GOT	○	○	○	○	○	○	×
SD memory card module	FX5-SDCD	○	○	×	×	×	×	×

Expansion adapter

Product	Model	If usable by each CPU module						
		FX5S		FX5UJ		FX5U		FX5UC
		AC	DC	AC	DC	AC	DC	
Analog I/O expansion adapter	FX5-4A-ADP	○	○	○	○	○	○	○
Analog input expansion adapter	FX5-4AD-ADP	○	○	○	○	○	○	○
Analog output expansion adapter	FX5-4DA-ADP	○	○	○	○	○	○	○
RTD temperature sensor input expansion adapter	FX5-4AD-PT-ADP	○	○	○	○	○	○	○
Thermocouple temperature sensor input expansion adapter	FX5-4AD-TC-ADP	○	○	○	○	○	○	○
Expansion adapter for RS-232C communications	FX5-232ADP	○	○	○	○	○	○	○
Expansion adapter for RS-485 communications	FX5-485ADP	○	○	○	○	○	○	○

SD memory card

Product	Model	If usable by each CPU module						
		FX5S		FX5UJ		FX5U		FX5UC
		AC	DC	AC	DC	AC	DC	
SD memory card	NZ1MEM-2GBSD, NZ1MEM-4GBSD, NZ1MEM-8GBSD, NZ1MEM-16GBSD	○*1	○*1	○	○	○	○	○

*1 An SD memory card module (FX5-SDCD), which is sold separately, is required.

Battery

Product	Model	If usable by each CPU module						
		FX5S		FX5UJ		FX5U		FX5UC
		AC	DC	AC	DC	AC	DC	
Battery	FX3U-32BL	×	×	×	×	○	○	○

Communication cable

Product	Model	If usable by each CPU module						
		FX5S		FX5UJ		FX5U		FX5UC
		AC	DC	AC	DC	AC	DC	
RS-232C connection cable for personal computer	FX-232CAB-1	○*1	○*1	○*1	○*1	○*1	○*1	○*1
USB cable	MR-J3USBCBL3M, GT09-C30USB-5P	○	○	○	○	×	×	×

*1 The expansion board for RS-232C communications (FX5-232-BD) or expansion adapter for RS-232C communications (FX5-232ADP) is required.

Terminal block

Terminal blocks are used when the input/output connection type of an FX5UC CPU module or an I/O module is the connector type.

Product	Model	If usable by each module							
		FX5UC CPU module		Input module		Output module		I/O module	
		FX5UC-□MT/D	FX5UC-□MT/DSS	FX5-C□EX/D	FX5-C□EX/DS	FX5-C□EYT/D	FX5-C□EYT/DSS	FX5-C32ET/D	FX5-C32ET/DSS
Terminal block	FX-16E-TB FX-32E-TB	○	×	○	×	○	×	○	×
	FX-16EX-A1-TB	○	×	○	×	×	×	○	×
	FX-16EYR-TB FX-16EYS-TB FX-16EYT-TB	○	×	×	×	○	×	○	×
	FX-16E-TB/UL FX-32E-TB/UL	×	○	×	○	×	○	×	○
	FX-16EYR-ES-TB/UL FX-16EYS-ES-TB/UL FX-16EYT-ESS-TB/UL FX-16EYT-ES-TB/UL	×	○	×	×	×	○	×	○

FX3 extension module

The following tables list the FX3 extension modules that can be used by a MELSEC iQ-F series system.
The FX3 extension modules can be used by connecting a bus conversion module in a MELSEC iQ-F series system.
○: Can be used, ×: Cannot be used
AC: AC power supply, DC: DC power supply

Extension power supply module

Product	Model	If usable by each CPU module						
		FX5S		FX5UJ		FX5U		FX5UC
		AC	DC	AC	DC	AC	DC	
Extension power supply module	FX3U-1PSU-5V	×	×	×	×	○	×	×

Extension device

Product	Model	If usable by each CPU module						
		FX5S		FX5UJ		FX5U		FX5UC
		AC	DC	AC	DC	AC	DC	
Special function block for analog input	FX3U-4AD	×	×	×	×	○	○	○
Special function block for analog output	FX3U-4DA	×	×	×	×	○	○	○
Temperature control block	FX3U-4LC	×	×	×	×	○	○	○
Pulse output block	FX3U-1PG	×	×	×	×	○	○	○
High-speed counter block	FX3U-2HC	×	×	×	×	○	○	○
CC-Link system master block	FX3U-16CCL-M	×	×	×	×	○	○	○
CC-Link system interface block	FX3U-64CCL	×	×	×	×	○*1	○*1	○*1
AnyWireASLINK system master	FX3U-128ASL-M	×	×	×	×	○	○	○
PROFIBUS-DP interface block	FX3U-32DP	×	×	×	×	○	○	○

*1 The module cannot communicate with a personal computer via CC-Link.

2.3 System Configuration Specifications

This section describes the specifications for the system configuration of the MELSEC iQ-F series.

To configure a system, check each of the following items.

No.	Item	Description	Reference
1	Number of modules connected on whole system	Check the number of extension devices to be connected to the CPU module and their connection methods. The number of connected modules and the connection methods differ depending on the CPU module used.	☞ Page 42 Number of connected extension devices (FX5S CPU module) ☞ Page 43 Number of connected extension devices (FX5UJ CPU module) ☞ Page 45 Number of connected extension devices (FX5U CPU module) ☞ Page 47 Number of connected extension devices (FX5UC CPU module)
2	Modules with restrictions	For some modules, the number and combinations of modules that can be used in one system are restricted. Check the number of connectable modules, the combinations of modules, and the order of connection.	☞ Page 49 Modules with restrictions
3	Number of I/O points	Check that the number of I/O points in the entire system does not exceed the number of I/O points that can be controlled by the CPU module.	☞ Page 52 Number of I/O points
4	Current consumption	Check that the internal current consumption of the entire system does not exceed the rated output current in the power supply specifications.	☞ Page 56 Current consumption

Point

The number of I/O points and the internal current consumption can be checked on GX Works3.

Number of connected extension devices (FX5S CPU module)

The following table lists the specifications for the number of extension devices that can be connected to the CPU module.

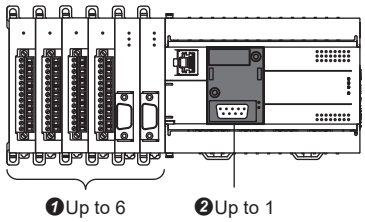

No.	Item	Maximum number of connectable modules	Reference
❶	Expansion adapter	6*1	☞ Page 42 Number of connected expansion adapters and expansion board
❷	Expansion board	1*2	
—	Extension module	Extension modules cannot be connected.	

*1 Maximum number of connectable modules when using only expansion adapters.
When an expansion board is used, the maximum number of connectable expansion adapters is five.

*2 An SD memory card module can be used with a communication board at the same time.

Number of connected expansion adapters and expansion board

A maximum of six expansion adapters can be connected on the left side of the CPU module.

One expansion board can be connected to the front face of the CPU module. When no expansion board is used, a maximum of six expansion adapters can be connected.

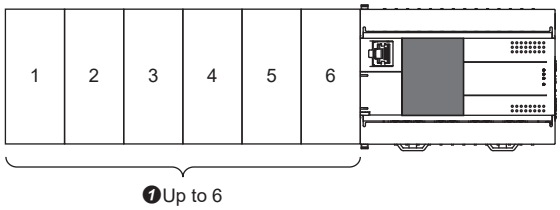

When an expansion board is used, a maximum of five expansion adapters can be connected.

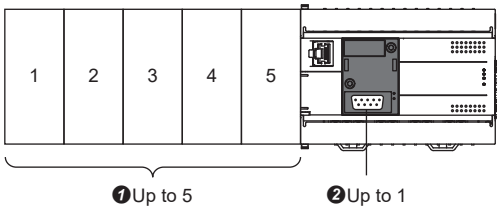

The order in which the communication adapters and analog adapters are connected is not restricted.

No.	Item		Maximum number of connectable modules	
❶	Expansion adapter	Analog adapter	4	When not using a communication board: 6 in total When using a communication board: 5 in total
		Communication adapter	When not using a communication board: 2 in total When using a communication board: 1 in total	
❷	Expansion board	Communication board	1	
		SD memory card module	1*1	

*1 The maximum number of connectable expansion adapters does not change when an SD memory card module is used.

Number of connected extension devices (FX5UJ CPU module)

The following table lists the specifications for the number of extension devices that can be connected to the CPU module.

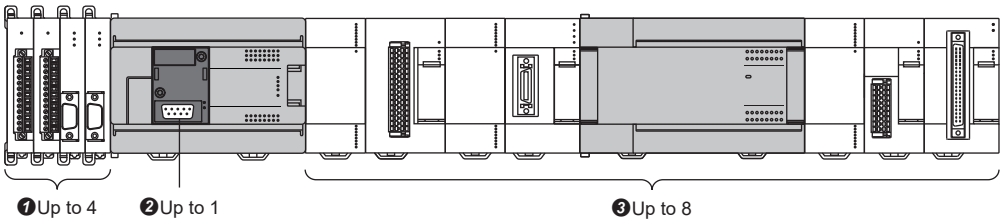

No.	Item	Maximum number of connectable modules	Reference
❶	Expansion adapter	4*1	☞ Page 43 Number of connected expansion adapters and expansion board
❷	Expansion board	1	
❸	Extension module	8*2	☞ Page 44 Number of connected extension modules

*1 Maximum number of connectable modules when using only expansion adapters.
When an expansion board is used, the maximum number of connectable expansion adapters is three.

*2 Maximum number of connectable modules when using a powered input/output module or extension power supply module.
When only the CPU module can supply power, the maximum number of connectable modules is 4.

Number of connected expansion adapters and expansion board

A maximum of four expansion adapters can be connected on the left side of the CPU module. One expansion board can be connected to the front face of the CPU module.

When no expansion board is used, a maximum of four expansion adapters can be connected.

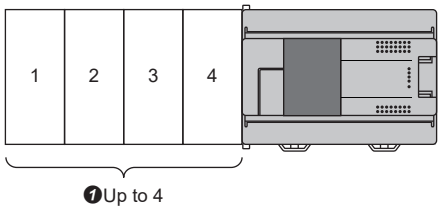

When an expansion board is used, a maximum of three expansion adapters can be connected.

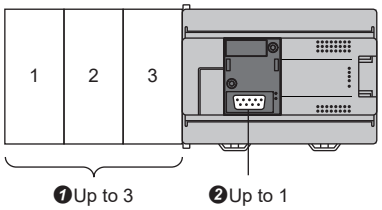

No.	Item		Maximum number of connectable modules	
❶	Expansion adapter	Analog adapter	2	When not using a communication board: 4 in total When using a communication board: 3 in total
		Communication adapter	When not using a communication board: 2 in total When using a communication board: 1 in total	
❷	Expansion board	Communication board	1	

Number of connected extension modules

A maximum of four extension modules can be connected on the right side of the CPU module.

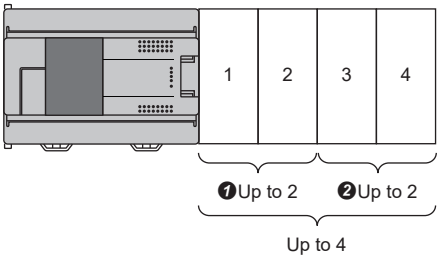

With a powered I/O module or extension power supply module, a maximum of eight extension modules can be additionally connected.

As an overall system, a maximum of eight extension modules can be connected.

The extension power supply module is not included in the number of connected modules.

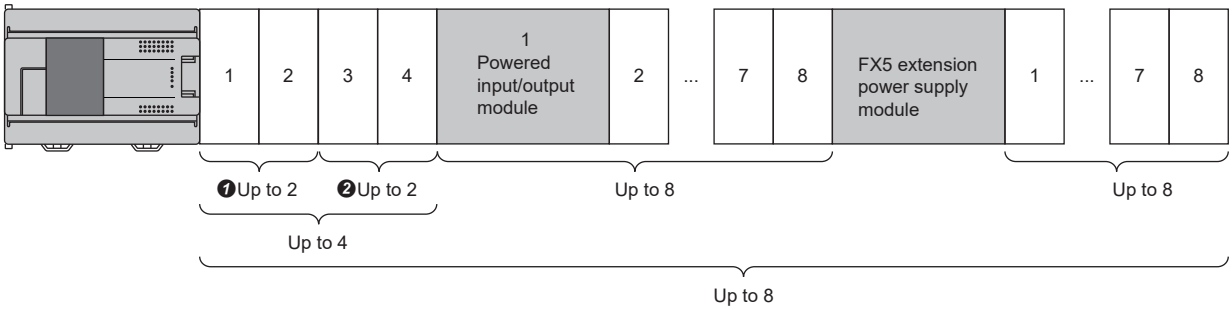

The following lists the restrictions when the extension modules (❶ and ❷) are connected after the CPU module.

No.	Restriction
❶	The total number of occupied I/O points of the extension modules must be within 32. When the first module of the extension modules ❶ occupies 32 points, only this module (one module) can be connected.
❷	In any condition, each extension module consumes 200mA[*1] generated from either of the 24VDC service power supply capacity (for the AC power supply type) or the 24VDC built-in power supply capacity (for the DC power supply type). When the 24VDC service power supply of the CPU module is used for the external 24V power supply of an extension module or an expansion adapter, the number of the connectable modules for ❷ may be one or less.[*2]

*1 Even when the FX5-□EX/ES, FX5-16ET/ES, and FX5-16ET/ESS are connected and the 24VDC service power supply of the CPU module is used for their input circuits, the amount of the 24VDC service power supply capacity to be consumed is 200mA.

*2 The number of the connectable modules differs according to the amount of the 24VDC service power supply capacity consumption. (☞ Page 58 Current consumption calculation method)

Number of connected extension devices (FX5U CPU module)

The following table lists the specifications for the number of extension devices that can be connected to the CPU module.

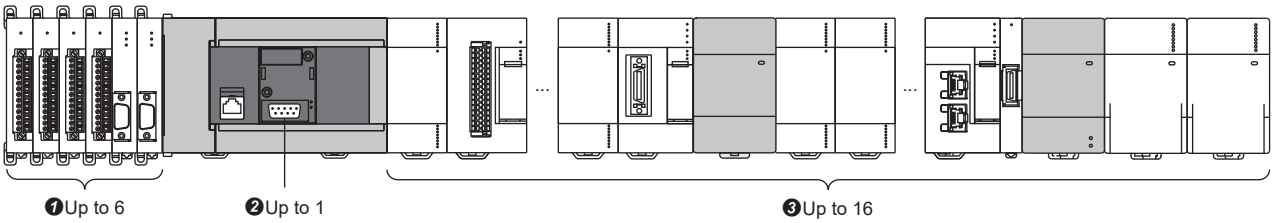

No.	Item	Maximum number of connectable modules	Reference
❶	Expansion adapter	6	☞ Page 45 Number of connected expansion adapters and expansion board
❷	Expansion board	1	
❸	Extension module	16*1	☞ Page 46 Number of connected extension modules

*1 Maximum number of connectable modules when using a powered input/output module or extension power supply module. When only the CPU module can supply power, the maximum number of connectable modules is 12.

Number of connected expansion adapters and expansion board

A maximum of six expansion adapters can be connected on the left side of the CPU module. One expansion board can be connected to the front face of the CPU module.

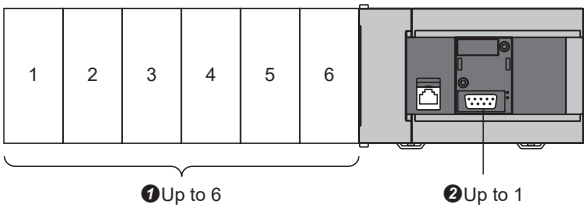

No.	Item		Maximum number of connectable modules
❶	Expansion adapter	Analog adapter	4
		Communication adapter	2
❷	Expansion board	Communication board	1

Number of connected extension modules

A maximum of 12 extension modules can be connected on the right side of the CPU module.

The connector conversion modules are not included in the number of connected modules.

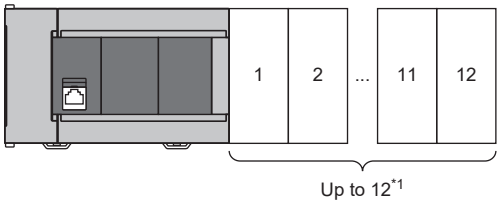

With a powered I/O module or extension power supply module, a maximum of ten extension modules can be additionally connected.

As an overall system, a maximum of sixteen extension modules can be connected.

The extension power supply modules are not included in the number of connected modules.

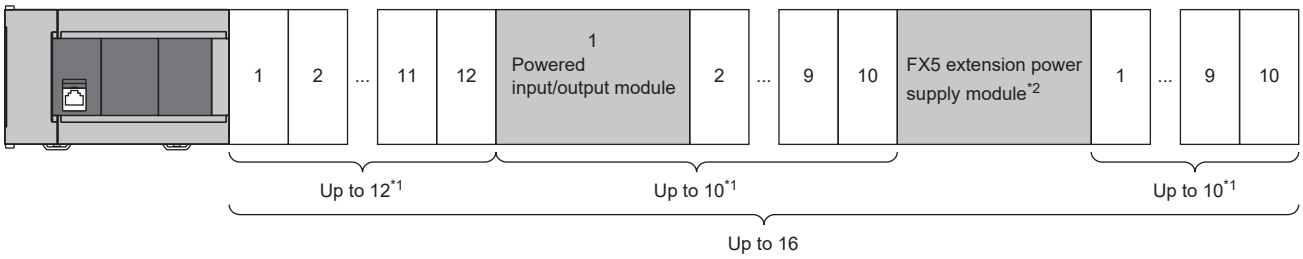

*1 Maximum number of connectable intelligent function modules is eight.

*2 When the modules of extension cable type are connected after the extension power supply modules (extension connector type), the connector conversion modules cannot be used.

■Number of connected FX3 extension modules

A maximum of six FX3 extension modules can be connected on the right side of the bus conversion module.

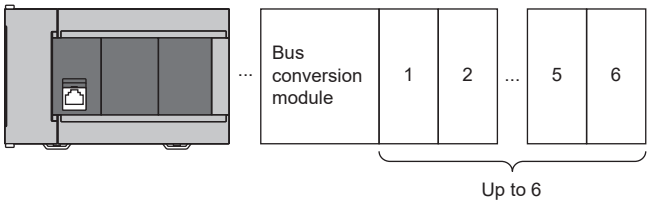

When an FX3 extension power supply module is used, a maximum of eight FX3 extension modules can be connected.

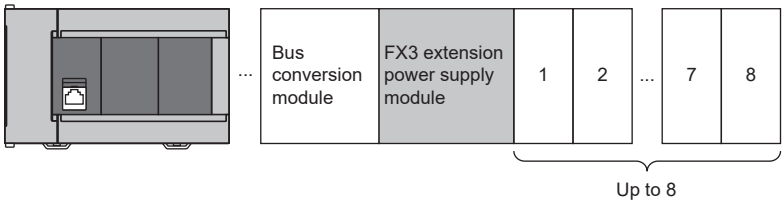

Number of connected extension devices (FX5UC CPU module)

The following table lists the specifications for the number of extension devices that can be connected to the CPU module.

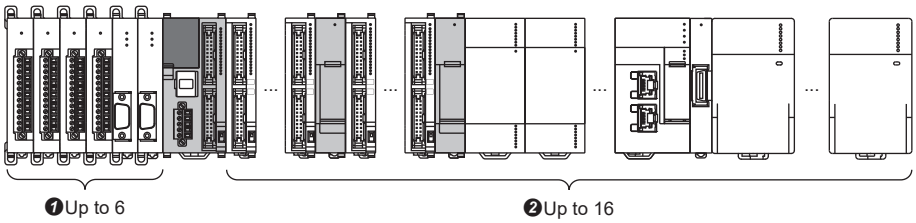

No.	Item	Maximum number of connectable modules	Reference
❶	Expansion adapter	6	☞ Page 47 Number of connected expansion adapters
❷	Extension module	16*1	☞ Page 48 Number of connected extension modules

*1 Maximum number of connectable modules when using a powered input/output module or extension power supply module. When only the CPU module can supply power, the maximum number of connectable modules is 12.

Number of connected expansion adapters

This section describes the number of connected modules on the left side of the CPU module.

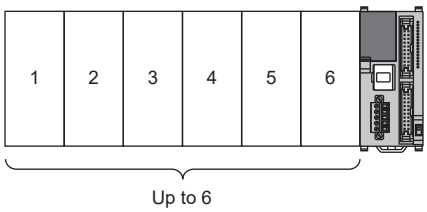

Item		Maximum number of connectable modules
Expansion adapter	Analog adapter	4
	Communication adapter	2

Number of connected extension modules

A maximum of 12 extension modules can be connected on the right side of the CPU module.

The connector conversion modules are not included in the number of connected modules.

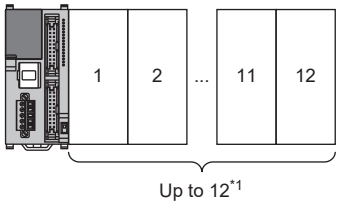

With a powered I/O module or extension power supply module, a maximum of ten extension modules can be additionally connected.

As an overall system, a maximum of sixteen extension modules can be connected.

The extension power supply modules are not included in the number of connected modules.

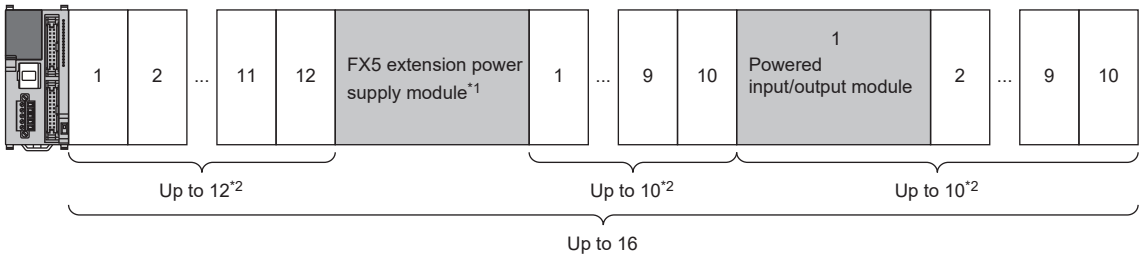

*1 When the modules of extension cable type are connected after the extension power supply modules (extension connector type), the connector conversion modules cannot be used.

*2 Maximum number of connectable intelligent function modules is eight.

When a connector conversion module and powered input/output module are used, a maximum 15 FX5 intelligent function modules can be connected.

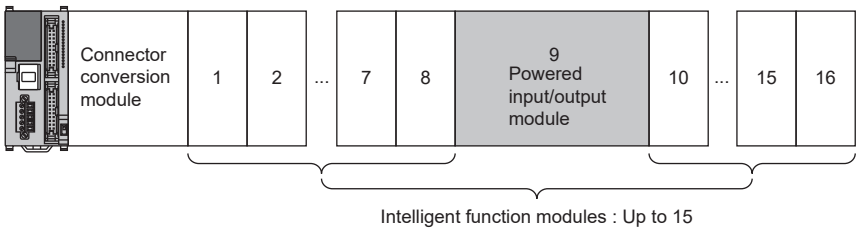

■Number of connected FX3 extension modules

A maximum of six FX3 extension modules can be connected on the right side of the bus conversion module.

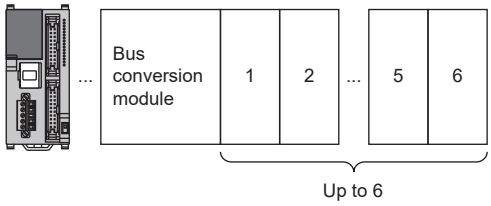

Modules with restrictions

This section describes the modules that have restrictions on the number of modules that can be connected in one system.

I/O module

Product	Model	Maximum number of connectable modules
High-speed pulse input/output module	FX5-16ET/ES-H, FX5-16ET/ESS-H	4

Extension power supply module

■MELSEC iQ-F

Product	Model	Maximum number of connectable modules
Extension power supply module	FX5-C1PS-5V	When using an FX5U/FX5UC CPU module: 2 When using an FX5UJ CPU module: 1
	FX5-1PSU-5V	When using an FX5U CPU module: 2 When using an FX5UJ CPU module: 1

■FX3 extension module

Product	Model	Maximum number of connectable modules
Extension power supply module	FX3U-1PSU-5V	2*1

*1 When an FX5 extension power supply module is used, two modules including the FX5 extension power supply module in total can be connected.

Intelligent function module

■MELSEC iQ-F

Product	Model	Maximum number of connectable modules	
High-speed counter module	FX5-2HC/ES	When using an FX5U CPU module: 15*1 When using an FX5UC CPU module: 13*1	
Simple Motion module	FX5-40SSC-S, FX5-80SSC-S*2	When using an FX5UJ CPU module: 1	
Motion module	FX5-40SSC-G, FX5-80SSC-G	4*3	4 in total
CC-Link IE TSN master/local module	FX5-CCLGN-MS	Master station: 1	
		Local station: 1	
Ethernet module	FX5-ENET, FX5-ENET/IP*4	1	
EtherNet/IP module	FX5-EIP*4	1	
OPC UA module	FX5-OPC	1	
CC-Link IE Field Network intelligent device station module	FX5-CCLIEF	1	
CC-Link system master/intelligent device module	FX5-CCL-MS	• Master station: 1*5 • Intelligent device station: 1*6	
AnyWireASLINK system master module	FX5-ASL-M	1*7	
PROFIBUS-DP master module	FX5-DP-M	1	

*1 Configure the system so that the number of the modules between the high-speed counter module and the power supply module (CPU module, extension power supply module, or powered I/O module) becomes less than eight.
*2 Use either the FX5-40SSC-S or the FX5-80SSC-S in one system.
*3 When the firmware version is "1.000", the FX5-SF-MU4T5 and the FX5-SF-8DI4 cannot be used together.
*4 The FX5-ENET/IP and FX5-EIP cannot be used together.
*5 Use together with the FX3U-16CCL-M is not possible.
*6 Use together with the FX3U-64CCL is not possible.
*7 Use together with the FX3U-128ASL-M is not possible.

■FX3 extension module

Product	Model	Maximum number of connectable modules
High-speed counter block	FX3U-2HC	2*1
CC-Link system master block	FX3U-16CCL-M	1*2
CC-Link system interface block	FX3U-64CCL	1*3
AnyWireASLINK system master	FX3U-128ASL-M	1*4

*1 Connect immediately after the bus conversion module or FX3 extension power supply module.
*2 When using the FX5-CCL-MS as the master station, this block cannot be used.
*3 When using the FX5-CCL-MS as an intelligent device station, this block cannot be used.
*4 Use together with the FX5-ASL-M is not possible.

A MELSEC iQ-F series module cannot be connected on the right side of the FX3 extension module. Place it on the rightmost side of the system.

Safety extension module

Product	Model	Maximum number of connectable modules
Safety main module	FX5-SF-MU4T5	1
Safety input expansion module	FX5-SF-8DI4	2

Connect a safety input expansion module on the right side of the safety main module.
Modules cannot be connected on the right side of a safety extension module, so place it on the rightmost side.
When using a safety extension module, an FX3 extension module cannot be used.
When using a safety extension module together with a motion module (FX5-40SSC-G, FX5-80SSC-G), connect a motion module with a firmware version of "1.001" or later.
Besides an FX5 safety extension module and motion module, when using a safety extension module together with any of the following intelligent function modules, use the versions specified below.

- FX5-20PG-P: "1.011" or later, FX5-20PG-D: "1.011" or later, FX5-CCLGN-MS: "1.002" or later, FX5-DP-M: "1.001" or later

Conversion module

Product	Model	Maximum number of connectable modules
Connector conversion module	FX5-CNV-IF, FX5-CNV-IFC	1
Bus conversion module	FX5-CNV-BUSC, FX5-CNV-BUS	1

Extended extension cable and connector conversion adapter

Product	Model	Maximum number of connectable modules
Extended extension cable	FX5-30EC, FX5-65EC	1
Connector conversion adapter	FX5-CNV-BC	1

- To connect to a module of extension cable type*1, the connector conversion adapter (FX5-CNV-BC) is required.
- When the bus conversion module is used together in the same system, connect the extension power supply module (FX5-1PSU-5V) or powered input/output module immediately after the extended extension cable.

*1 Excluding the extension power supply module (FX5-1PSU-5V), powered input/output module, and connector conversion module (FX5-CNV-IF)

Expansion adapter

Product	Model	Maximum number of connectable modules
Analog I/O expansion adapter	FX5-4A-ADP	When using an FX5S/FX5U/FX5UC CPU module: 2*1

*1 When the FX5-4A-ADP with the serial number 224**** or later is used, the maximum number of connectable modules is four.

- When connecting two or more FX5-4DA-ADPs next to the FX5-4A-ADP with the serial number 223**** or earlier, connect the FX5-4DA-ADPs on only one side of the FX5-4A-ADP.

Configurable or not configurable	Connection order of expansion adapters
Configurable	[FX5-4A-ADP] - [FX5-4DA-ADP] - [FX5-4DA-ADP]
	[FX5-4DA-ADP] - [FX5-4DA-ADP] - [FX5-4A-ADP]
Not configurable	[FX5-4DA-ADP] - [FX5-4A-ADP] - [FX5-4DA-ADP]

- When using the FX5-4DA-ADP and FX5-4A-ADP and connecting them next to the FX5-4AD-TC-ADP, connect them to only one side of the FX5-4AD-TC-ADP to satisfy the specifications accuracy of the FX5-4AD-TC-ADP.

Configurable or not configurable	Connection order of expansion adapters
Configurable	[FX5-4AD-TC-ADP] - [FX5-4A-ADP] - [FX5-4A-ADP]
	[FX5-4AD-TC-ADP] - [FX5-4A-ADP] - [FX5-4DA-ADP]
	[FX5-4AD-TC-ADP] - [FX5-4DA-ADP] - [FX5-4A-ADP]
	[FX5-4AD-TC-ADP] - [FX5-4DA-ADP] - [FX5-4DA-ADP]
	[FX5-4A-ADP] - [FX5-4A-ADP] - [FX5-4AD-TC-ADP]
	[FX5-4A-ADP] - [FX5-4DA-ADP] - [FX5-4AD-TC-ADP]
	[FX5-4DA-ADP] - [FX5-4A-ADP] - [FX5-4AD-TC-ADP]
	[FX5-4DA-ADP] - [FX5-4DA-ADP] - [FX5-4AD-TC-ADP]
Not configurable	[FX5-4A-ADP] - [FX5-4AD-TC-ADP] - [FX5-4A-ADP]
	[FX5-4A-ADP] - [FX5-4AD-TC-ADP] - [FX5-4DA-ADP]
	[FX5-4DA-ADP] - [FX5-4AD-TC-ADP] - [FX5-4A-ADP]
	[FX5-4DA-ADP] - [FX5-4AD-TC-ADP] - [FX5-4DA-ADP]

Number of I/O points

Consider the number of I/O points in the entire system so that it does not exceed the number of I/O points that can be controlled by the CPU module.

The number of I/O points in the entire system is the sum of the following numbers of points.

- Number of I/O points (including the number of occupied I/O points)
- Number of remote I/O points

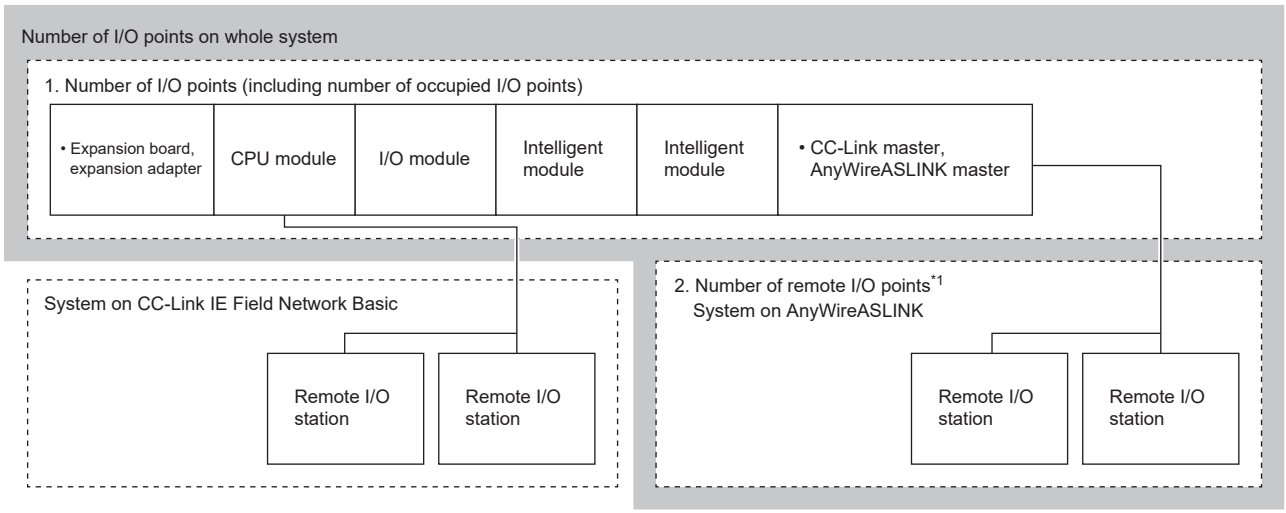

The number of I/O points that can be controlled by the CPU module differs depending on the CPU module and its firmware version.

CPU module	Firmware version	Number of I/O points in the entire system	Number of I/O points (including the number of occupied I/O points)	Number of remote I/O points
FX5S CPU module	No restrictions	80 points maximum	80 points maximum	—
FX5UJ CPU module	No restrictions	256 points maximum	256 points maximum	256 points maximum*1
FX5U CPU module FX5UC CPU module	1.110 or higher	512 points maximum	384 points maximum	512 points maximum*1
	1.100 or higher, but lower than 1.110	512 points maximum	384 points maximum	512 points maximum*2
	Lower than 1.100	512 points maximum	256 points maximum	384 points maximum*2

*1 The remote I/O station of CC-Link IE Field Network Basic is not calculated as the number of remote I/O points.

*2 The remote I/O station of CC-Link IE Field Network Basic is included in calculations of the number of remote I/O points.

Number of I/O points (including the number of occupied I/O points)

The number of input/output points is the sum of the following numbers of the points.

- Number of input/output points on CPU module and I/O module
- Number of occupied input/output points of intelligent function modules, safety main modules, and bus conversion modules

■Number of I/O points on CPU module and I/O modules

Count the total number of input/output points of the CPU module and I/O modules.

For the number of I/O points, count the total number of input points (X0 and more) and output points (Y0 and more) of the CPU module and I/O modules.

For details on the number of I/O points by model, refer to the following.

- Example of number of I/O points

Module	Model	Number of input points	Number of output points	Number of I/O points	Description
CPU module	FX5UJ-24MR/ES	10 points (16 points)	14 points (16 points)	24 points (32 points)	The number in brackets "()" is the number of occupied points. When calculating the total number of I/O points, the values in the brackets "( )" are used. The number of I/O points is therefore 32. Number of input points (16) + Number of output points (16) = Number of I/O points (32)
	FX5U-32MT/ES	16 points	16 points	32 points	The number of I/O points is 32. Number of input points (16) + Number of output points (16) = Number of I/O points (32)
Input module	FX5-16EX/ES	16 points	—	16 points	The number of I/O points is 16.
Output module	FX5-16EYT/ES	—	16 points	16 points	The number of I/O points is 16.

■Number of occupied I/O points

Count the number of occupied input/output points of intelligent function modules, safety main modules, and bus conversion modules.

The number of occupied I/O points per module is 8.

Extension power supply modules, connector conversion modules, expansion boards, and expansion adapters have no occupied I/O points.

- Example of number of occupied I/O points

Module	Model	Number of occupied I/O points	Description
Expansion board	FX5-232-BD	—	No occupied points
Expansion adapter	FX5-232ADP	—	No occupied points
Simple Motion module	FX5-40SSC-S	8 points	Eight points are occupied because this module is an intelligent function module.
Bus conversion module	FX5-CNV-BUS	8 points	Eight points are occupied because this module is a bus conversion module.
Analog input	FX3U-4AD	8 points	Eight points are occupied because this module is an intelligent function module.

Number of remote I/O points

When the master module of the network is used, calculate the number of remote I/O points connected on the network.
The maximum number of remote I/O points differs according to type of the network.

■CC-Link IE Field Network Basic

Remote I/O points that are used in CC-Link IE Field Network Basic are calculated as "number of occupied stations × 64 points".

The maximum number of remote I/O points differs depending on the CPU module and firmware version being used.

CPU module	Firmware version	Maximum number of remote I/O points
FX5S CPU module FX5UJ CPU module	No restrictions	—*1
FX5U CPU module FX5UC CPU module	1.110 or higher	—*1
	1.100 or higher, but lower than 1.110	512 points maximum
	Lower than 1.100	384 points maximum

*1 Not calculated as remote I/O points. For details, refer to the following.
CC-Link IE Field Network Basic Reference Manual

■CC-Link

The number of remote I/O points to be used in CC-Link is calculated as "number of remote I/O stations × 32 points".
Even if using less than 32 remote I/O points, calculate as "number of remote I/O stations × 32 points".
The maximum number of remote I/O points differs depending on the CPU module and firmware version being used.

CPU module	Firmware version	Maximum number of remote I/O points	
		FX5-CCL-MS (when master station)	FX3U-16CCL-M
FX5UJ CPU module	No restrictions	192 points maximum	—
FX5U CPU module FX5UC CPU module	1.100 or higher	448 points maximum	256 points maximum
	Lower than 1.100	384 points maximum	256 points maximum

Point

Maximum number of the connected stations of the remote device station and the intelligent device station is 14 regardless of the number of remote I/O points.
For details, refer to the following.
MELSEC iQ-F FX5 CC-Link System Master/Intelligent Device Module User's Manual

■AnyWireASLINK

The number of I/O points set below is assigned to the remote I/O to be used with AnyWireASLINK.

- FX5-ASL-M: Set with the engineering tool parameters.
- FX3U-128ASL-M: Set with the rotary switch on the FX3U-128ASL-M main body.

For details, refer to the following.
MELSEC iQ-F FX5 AnyWireASLINK System Master Module User's Manual
FX3U-128ASL-M User's Manual

The maximum number of remote I/O points differs depending on the CPU module and firmware version being used.

CPU module	Firmware version	Maximum number of remote I/O points	
		FX5-ASL-M	FX3U-128ASL-M
FX5UJ CPU module	No restrictions	216 points maximum	—
FX5U CPU module FX5UC CPU module	1.100 or higher	448 points maximum	128 points maximum
	Lower than 1.100	384 points maximum	128 points maximum

Precautions

- When CC-Link IE Field Network Basic is used, remote I/O points that are used in CC-Link IE Field Network Basic are occupied, and then remote I/O points of the intelligent function module are occupied. For information on CC-Link IE Field Network Basic, refer to CC-Link IE Field Network Basic Reference Manual.
- When using the CC-Link master (FX3U-16CCL-M) and AnyWireASLINK master (FX3U-128ASL-M) together, connect the FX3U-128ASL-M before (on the left side of) the CC-Link master. In the FX5U CPU module, the FX3U-16CCL-M parameters are set up by programmable controller program, and up to 256 remote I/O points are occupied (including vacant points). Therefore, when the FX3U-16CCL-M is connected before (on the left side), the number of remote I/O points that can be used by the FX3U-128ASL-M that is connected after (on the right side) may be less than 128 points.

Ex.

When the number of I/O points is 160 points, the FX3U-16CCL-M is connected before (on the left side of) the FX3U-128ASL-M, and 256 points of the remote I/O points to be used by the FX3U-16CCLM are occupied: 512 points - 160 points - 256 points = 96 points

Remote I/O points that can be used with the FX3U-128ASL-M are 96 points or less.

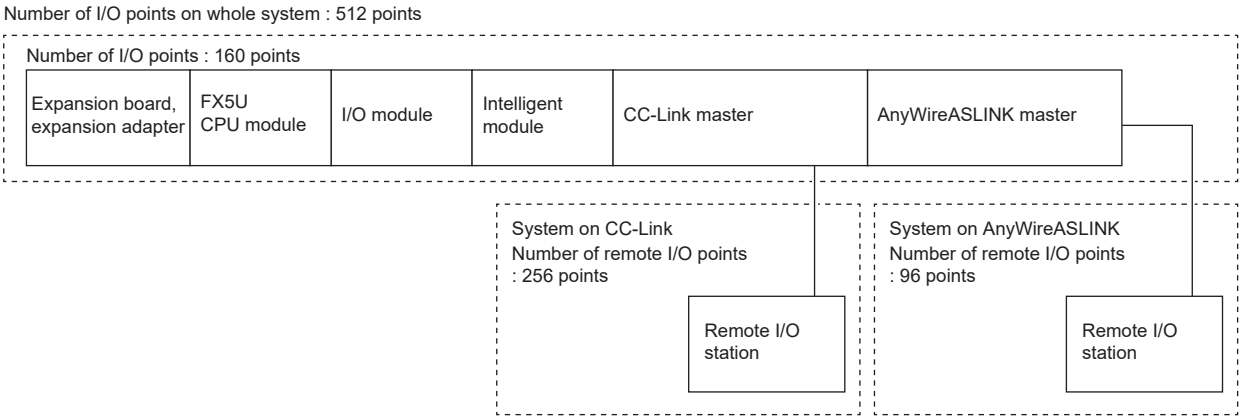

Ex.

When the number of I/O points is 160 points, the FX3U-16CCL-M is connected after (on the right side of) the FX3U-128ASL-M, and the total number of remote I/O points to be used by the FX3U-128ASL-M is 128: 512 points - 160 points - 128 points = 224 points

Remote I/O points that can be used with the FX3U-16CCL-M are 224 points or less.

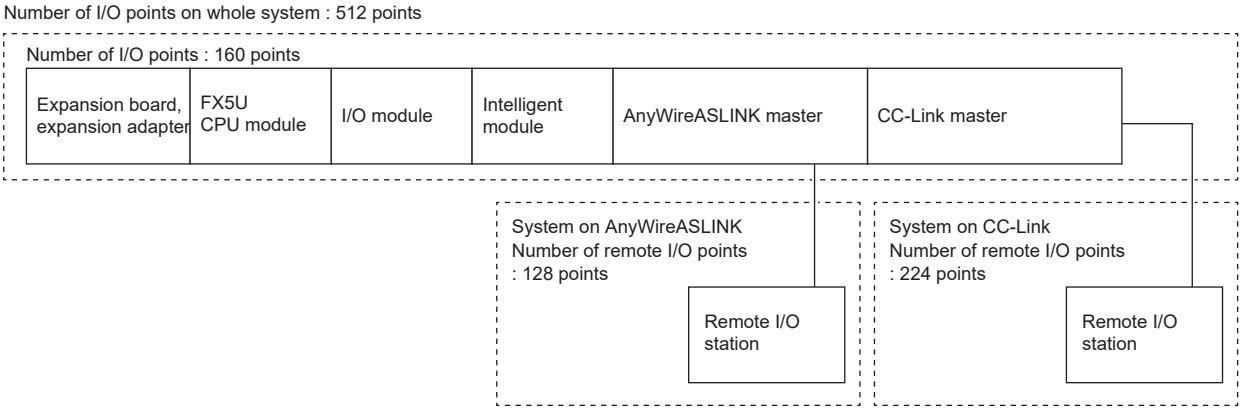

Current consumption

Power required for expansion adapters, expansion boards, and extension modules is supplied from the CPU module.
If the power supply capacity of the CPU module only is insufficient, use a powered input/output module or extension power supply module.

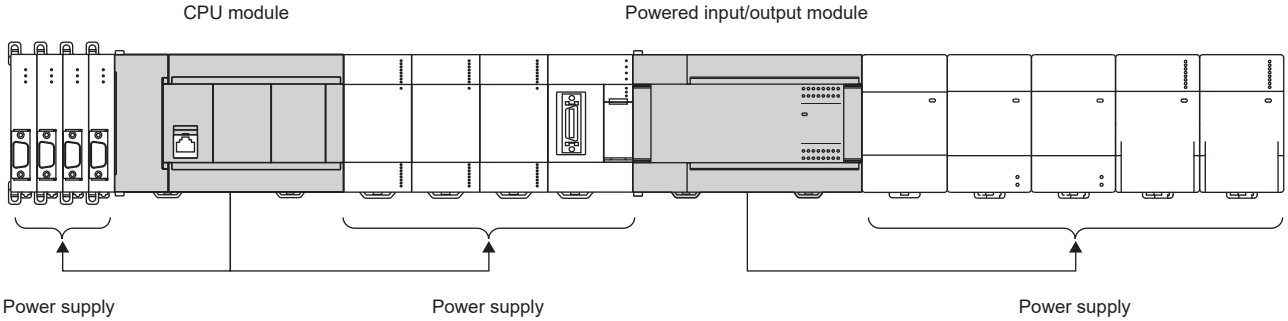

Point

The internal current consumption can be checked on GX Works3.

24VDC service power supply

A CPU module and powered input/output module based on AC power supply specifications each are equipped with a 24VDC service power supply and can be used as a power supply for the input devices and a 24VDC power supply for the expansion adapters and intelligent function modules.*1 However, when using the 24VDC service power supply, the 24VDC service power supply capacity that can be used by the CPU module and the powered input/output module is reduced.

*1 The FX5S CPU module can only be used as a power supply for the input devices. (Cannot be used as an external power supply for expansion adapters.)

Current consumption check procedure

Calculate current consumption in the following order and consider whether to add a powered input/output module or extension power supply module.

1. Check if the current consumption of the extension devices exceeds the power supply capacity of the CPU module. (☞ Page 58 Current consumption)

Ex.

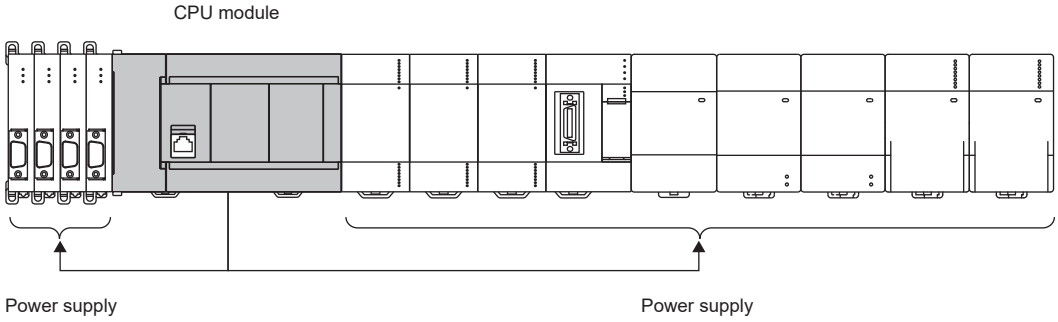

2. If the power supply capacity of the CPU module is exceeded, add a powered input/output module or extension power supply module and calculate current consumption again.

Ex.

Calculate the current consumption in the ranges powered by the CPU module and by the powered input/output module.

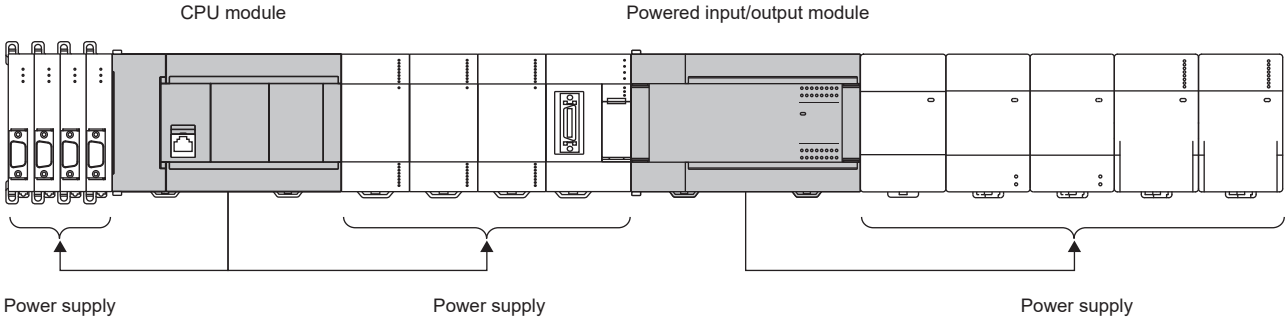

Current consumption calculation method

The following shows how to calculate current consumption.

The same calculation method applies to the CPU module, the powered input/output module, and the extension power supply module.

However, the calculation method is different at the following points for the FX5S CPU module and the FX5UJ CPU module.

Module	Difference
FX5S CPU module	Calculation of the current consumption of expansion adapters and expansion boards is not required. When using the expansion adapters that require an external 24VDC power supply, prepare the external power supply.
FX5UJ CPU module	Calculation of the current consumption of the 5VDC power supply is not required. When the power is supplied from a 24VDC service power supply to the expansion adapters (FX5-4DA-ADP or FX5-4A-ADP) that require an external 24V power supply, or when extension modules with power connectors are used, calculation of the current consumption is required. For extension modules, calculation of current consumption is not required when the total number of occupied I/O points is within 32 and the number of extension modules is 2 or less. For extension modules connected after the limits are exceeded, 200mA produced by the 24VDC power supply is consumed per module.

1. Check the power supply capacity of the CPU module, powered input/output module, or extension power supply module being used.

Ex.

For the FX5U CPU module

Module	Model	Power supply capacity	
		5VDC built-in power supply	24VDC service power supply
CPU module	FX5U-32MT/ES	900mA	400mA*1

Ex.

For the FX5UJ CPU module

Module	Model	Power supply capacity	
		5VDC built-in power supply	24VDC service power supply
CPU module	FX5UJ-40MT/ES	Calculation not required	400mA*1

For the FX5UJ CPU module, calculation of the current consumption of the 5VDC power supply is not required.

*1 Value when 24VDC service power supply is used for input circuits. The power supply capacity differs when external power supply is used for input circuit.

2. Check the current consumption of extension devices.

Ex.

For the FX5U CPU module

Module	Model	Current consumption	
		5VDC power supply	24VDC power supply
Expansion board	FX5-232-BD	20mA	—
Expansion adapter	FX5-232ADP	30mA	30mA
Output module	FX5-16EYT/ES	100mA	125mA
Input module	FX5-16EX/ES	100mA	85mA*1
Simple Motion module	FX5-40SSC-S	—	—
Bus conversion module	FX5-CNV-BUS	150mA	—
Analog input	FX3U-4AD	110mA	—

*1 When using an external power supply for an input circuit, calculate current consumption of the 24VDC power supply as 0mA.

Total current consumption

- 5VDC power supply: 510mA
- 24VDC power supply: 240mA

Ex.

For the FX5UJ CPU module

Module	Model	Current consumption	
		5VDC power supply	24VDC power supply
Expansion board	FX5-232-BD	Calculation not required	—
Expansion adapter	FX5-232ADP	Calculation not required	Calculation not required
Output module	FX5-16EYT/ES	Calculation not required	Calculation not required
Input module	FX5-16EX/ES	Calculation not required	Calculation not required
Simple Motion module	FX5-40SSC-S	—	200mA

Total current consumption

- 24VDC power supply: 200mA

3. Check if expansion to the CPU module, powered input/output module, or extension power supply module is permitted. When the calculation result is a negative value, the current consumption exceeds the power supply capacity of the module being used. Add a powered input/output module or extension power supply module and reconsider the system configuration.

- 5VDC power supply

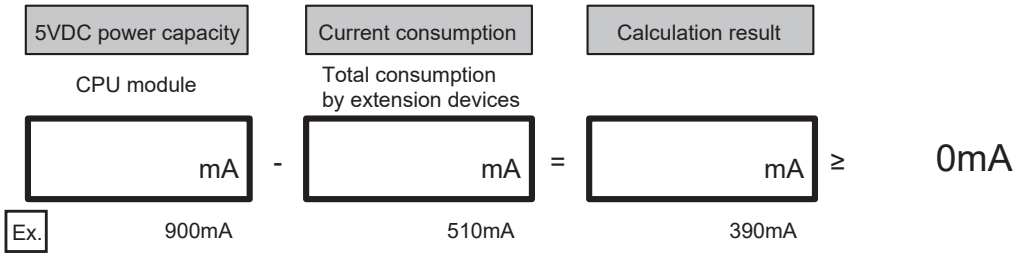

- 24VDC power supply

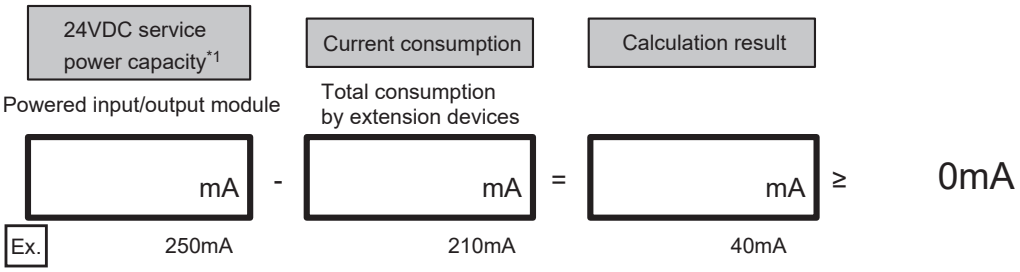

*1 When using a CPU module with a DC power supply, apply the 24VDC power supply capacity.

2.4 Numbers and Assignment in System

This section describes input/output numbers and module numbers.

Module input/output number

The input/output numbers are octal numbers. Input is assigned to "X" and output to "Y".
Input/output numbers are used for communications of ON/OFF data between I/O modules and the CPU module.

Octal for input/output numbers (X/Y)

Input/output numbers (X/Y) are automatically assigned as shown below.
X0 to X7, X10 to X17, X20 to X27, ..., X70 to X77, X100 to X107, ...
Y0 to Y7, Y10 to Y17, Y20 to Y27, ..., Y70 to Y77, Y100 to Y107, ...
However, X16, X17, and Y12 to Y17 of the FX5UJ-24M and X44 to X47 of the FX5UJ-60M are vacant numbers.

Numbers for added I/O module

To an added I/O module, input numbers and output numbers following the input numbers and output numbers given to the preceding device are assigned. The last digit of the assigned numbers must begin with 0.

Module number of extension modules

The CPU module automatically assigns numbers (1 to 16) to intelligent function modules, safety main module or bus conversion module as module numbers in order of distance from the CPU module.

• Intelligent function modules, safety main module or bus conversion module connected to the CPU module

Module numbers are assigned to intelligent function modules in order of distance from the CPU module: No.1, No.2, ..., No.16.

• Products to which module numbers are not assigned

Module numbers are not assigned to the following extension devices.

Product	Model
I/O module	FX5-16EX/ES, FX5-16EYT/ES, and other applicable models
Expansion board	FX5-232-BD, FX5-485-BD, and other applicable models
Expansion adapter	FX5-232ADP, FX5-485ADP, and other applicable models
Connector conversion module	FX5-CNV-IF
Connector conversion adapter	FX5-CNV-BC
Extension power supply module	FX5-1PSU-5V, FX5-C1PS-5V, FX3U-1PSU-5V
Safety input expansion module	FX5-SF-8DI4

Ex.
When the FX5 safety extension modules are not connected

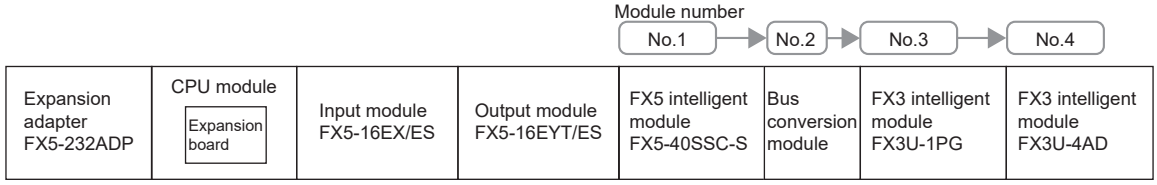

Ex.
When the FX5 safety extension modules are connected

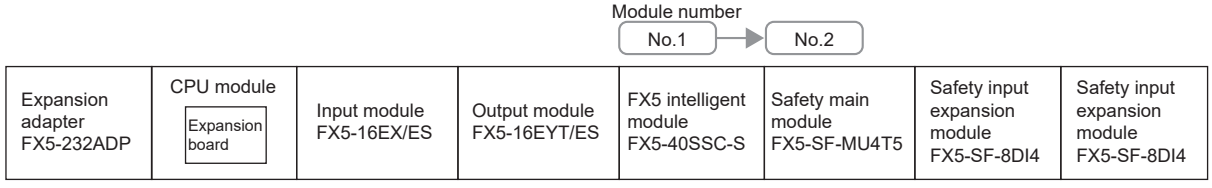

2.5 Precautions

Selection of input/output type

For some CPU modules, an input (X) type can be selected from either sink input or source input. Note that the sink input and source input cannot be mixed in the same system.

Precautions for operating ambient temperature

This section describes precautions when the device is used at an operating ambient temperature below 0℃.

Precaution when used at an operating ambient temperature below 0℃

- With some exceptions, the operating ambient temperature is -20 to 55℃ for the FX5 programmable controllers manufactured in June 2016 or later[*1].
- The operating ambient temperature is 0 to 55℃ for the FX5S CPU module and FX5UJ CPU module, and the FX5 programmable controllers manufactured in June 2016 or earlier[*1].
- When the device is used in a low-temperature environment, prevent the product from freezing or occurring condensation.
- When used in a low-temperature environment, use in an environment with no sudden temperature changes. When there are sudden temperature changes because of opening/closing of the control panel or other reasons, condensation may occur, which may cause a fire, fault, or malfunction. Furthermore, use an air conditioner in dehumidifier mode to prevent condensation.

*1 For details on how to check the serial number, refer to ☞ Page 287 How to Check the Date of Manufacture.

Related devices which cannot be used at an operating ambient temperature below 0℃

The following devices cannot be used at an operating ambient temperature below 0℃.

Product	Model
Simple Motion module	FX5-40SSC-S, FX5-80SSC-S
Motion module	FX5-40SSC-G, FX5-80SSC-G
Bus conversion module	FX5-CNV-BUS, FX5-CNV-BUSC
Battery	FX3U-32BL
SD memory card	NZ1MEM-2GBSD, NZ1MEM-4GBSD, NZ1MEM-8GBSD, NZ1MEM-16GBSD
MELSEC-F series module	FX3U-4AD, FX3U-4DA, FX3U-4LC, FX3U-1PG, FX3U-2HC, FX3U-16CCL-M, FX3U-64CCL, FX3U-128ASL-M, FX3U-32DP
Terminal block	FX-16E-TB, FX-32E-TB, FX-16EX-A1-TB, FX-16EYR-TB, FX-16EYT-TB, FX-16EYS-TB, FX-16E-TB/UL, FX-32E-TB/UL, FX-16EYR-ES-TB/UL, FX-16EYT-ES-TB/UL, FX-16EYT-ESS-TB/UL, FX-16EYS-ES-TB/UL
I/O cable	FX-16E-500CAB-S, FX-16E-□CAB, FX-16E-□CAB-R

Specifications when used at an operating ambient temperature below 0℃

For using the device at an operating ambient temperature below 0℃, specifications are different from when using it at an operating ambient temperature of 0 to 55℃.

Item			When used at 0 to 55℃	When used at below 0℃
Capacity of 24VDC service power supply of the CPU module (AC power supply specifications)	FX5U-32M□/E□	Supply capacity when 24VDC service power supply is used for the input circuit of the CPU module	400mA	300mA
		Supply capacity when external power supply is used for the input circuit of the CPU module	480mA	380mA
	FX5U-64M□/E□	Supply capacity when 24VDC service power supply is used for the input circuit of the CPU module	600mA	300mA
		Supply capacity when external power supply is used for the input circuit of the CPU module	740mA	440mA
	FX5U-80M□/E□	Supply capacity when 24VDC service power supply is used for the input circuit of the CPU module	600mA	300mA
		Supply capacity when external power supply is used for the input circuit of the CPU module	770mA	470mA

3 PART NAMES

3.1 CPU Module

This section describes the part names of the CPU module.

FX5S CPU module

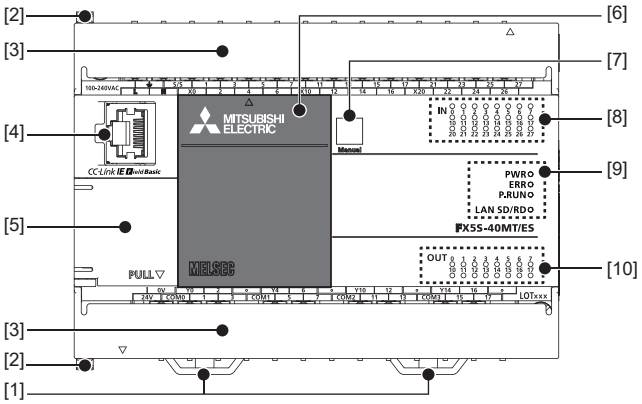

No.	Name	Description
[1]	DIN rail mounting hook	Hook for mounting a CPU module on a DIN rail of DIN46277 (width: 35mm).
[2]	Expansion adapter connecting hook	When connecting an expansion adapter, secure it with these hooks.
[3]	Terminal block cover	Cover for protecting the terminal block. The cover can be opened for wiring. Keep the cover closed while equipment is running (power is on).
[4]	Built-in Ethernet communication connector	Connector for connection with Ethernet-compatible devices (with cap). For a connector which is not connected with the Ethernet cable, install a cap provided as an accessory to block dust or dirt. For details, refer to the following. MELSEC iQ-F FX5 User's Manual (Communication)
[5]	Peripheral connecting connector cover	Cover for protecting the built-in USB communication connector and others. The built-in USB communication connector and RUN/STOP/RESET switch are located under this cover.
[6]	Expansion board connector cover	Cover for protecting the expansion board connector.
[7]	Two-dimensional code for web manual	A two-dimensional code for the web manual link
[8]	Input display LED	Turns on when input is on.
[9]	PWR LED	Indicates whether the CPU module is powered or not. On: Powered Off: Not powered or hardware error
	ERR LED	Indicates the error status of the CPU module. On: Error or hardware error Flashing:Factory default setting, error, hardware error, or resetting Off: Normal operation
	P.RUN LED	Indicates the program running status. On: Normal operation Flashing:Paused, stopped (program mismatched), or online program change (PAUSE or RUN was set at the time of online program change.) Off: Stopped or stop error
	SD/RD LED	Turns on when the CPU module is sending or receiving data through built-in Ethernet communications.
[10]	Output display LED	Turns on when output is on.

With the cover open

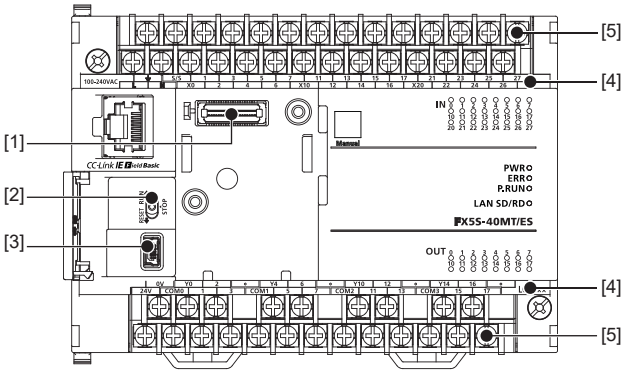

No.	Name	Description
[1]	Expansion board connector	Connector for connecting an expansion board.
[2]	RUN/STOP/RESET switch	Switch for operating the CPU module. RUN: Runs the program STOP: Stops the program RESET: Resets the CPU module (Hold the switch on the RESET side for approximately 1 second.)
[3]	Built-in USB communication connector	Connector for connection with engineering tool.
[4]	Terminal names	The signal names for power supply, input, and output terminals are shown. ⏚ shows a function grounding terminal.
[5]	Terminal	Terminals for power, input, and output. For details on the terminal layout, refer to ☞ Page 105 Power, input/output terminal block.

Left side/Right side

Left side

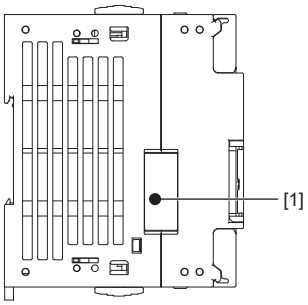

Right side

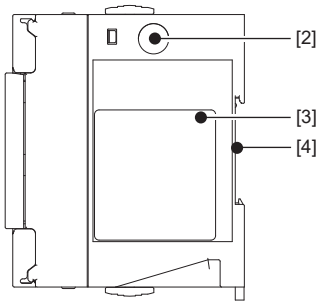

No.	Name	Description
[1]	Expansion adapter connector cover	Cover for protecting the expansion adapter connector. Connect the expansion adapter to the expansion adapter connector under the cover.
[2]	Genuine product certification label	Genuine product certification label to prevent counterfeiting
[3]	Nameplate	The product model name, manufacturer's serial number, power supply specifications, and MAC address are shown. ⚠ is a mark that instructs the use of a copper wire with an appropriate temperature rating (80℃ or more) for wiring.
[4]	DIN rail mounting groove	The module can be installed on a DIN46277 rail (width: 35mm).

Point

Products that do not have the genuine product certification label or nameplate are not covered by the warranty.

Top side/Bottom side

Top side

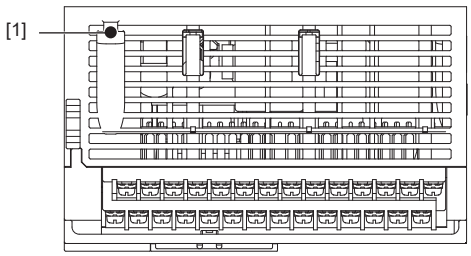

Bottom side

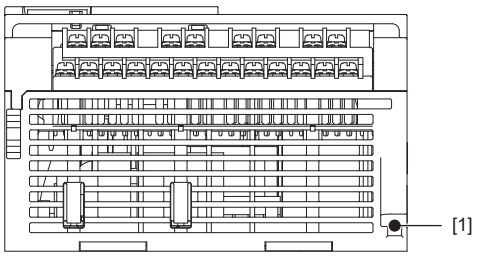

No.	Name	Description
[1]	CPU module fixing screw hole	Screw holes for fixing the CPU module to the control panel. (For FX5S-80M□*1, there are four screw holes.)

*1 Area-specific model

FX5UJ CPU module

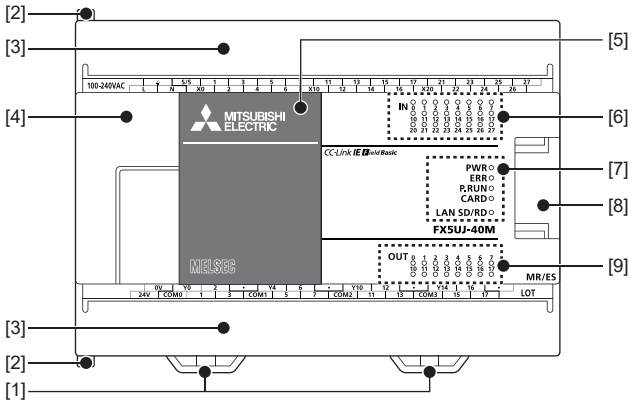

No.	Name	Description
[1]	DIN rail mounting hook	Hook for mounting a CPU module on a DIN rail of DIN46277 (width: 35mm).
[2]	Expansion adapter connecting hooks	When connecting an expansion adapter, secure it with these hooks.
[3]	Terminal block cover	Cover for protecting the terminal block. The cover can be opened for wiring. Keep the cover closed while equipment is running (power is on).
[4]	Peripheral connecting connector cover	Cover for protecting the SD memory card slot, the RUN/STOP/RESET switch, and others. The built-in USB communication connector, built-in Ethernet communication connector, RUN/STOP/RESET switch, SD memory card slot, and others are located under this cover.
[5]	Expansion board connector cover	Cover for protecting the expansion board connector.
[6]	Input display LED	Turns on when input is on.
[7]	PWR LED	Indicates whether the CPU module is powered or not. On: Powered Off: Not powered or hardware error
	ERR LED	Indicates the error status of the CPU module. On: Error or hardware error Flashing:Factory default setting, error, hardware error, or resetting Off: Normal operation
	P.RUN LED	Indicates the program running status. On: Normal operation Flashing:Paused, stopped (program mismatched), or online program change (PAUSE or RUN was set at the time of online program change.) Off: Stopped or stop error
	CARD LED	Indicates whether an SD memory card can be used or not. On: Can be used or cannot be removed Flashing:In preparation Off: Not inserted or can be removed
	SD/RD LED	Turns on when the CPU module is sending or receiving data through built-in Ethernet communications.
[8]	Extension connector cover	Cover for protecting the extension connector. Connect the extension cable of an extension module to the extension connector under the cover.
[9]	Output display LED	Turns on when output is on.

With the cover open

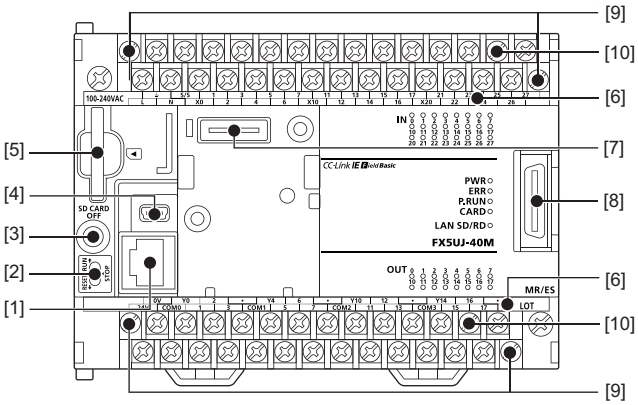

No.	Name	Description
[1]	Built-in Ethernet communication connector	Connector for connection with Ethernet-compatible devices. For details, refer to the following. MELSEC iQ-F FX5 User's Manual (Communication)
[2]	RUN/STOP/RESET switch	Switch for operating the CPU module. RUN: Runs the program STOP: Stops the program RESET: Resets the CPU module (Hold the switch on the RESET side for approximately 1 second.)
[3]	SD memory card disable switch	Switch for disabling access to the SD memory card when the SD memory card is to be removed.
[4]	Built-in USB communication connector	Connector for connection with engineering tool.
[5]	SD memory card slot	Slot for inserting an SD memory card.
[6]	Terminal names	The signal names for power supply, input, and output terminals are shown. ⏚ shows a function grounding terminal.
[7]	Expansion board connector	Connector for connecting an expansion board.
[8]	Extension connector	Connector for connecting the extension cable of an extension module.
[9]	Terminal block mounting screws	Gradually loosen the left and right screws (alternatingly) to remove the upper part of the terminal block.
[10]	Terminal	Terminals for power, input, and output. For details on the terminal layout, refer to ☞ Page 105 Power, input/output terminal block.

Left side/Right side

Left side

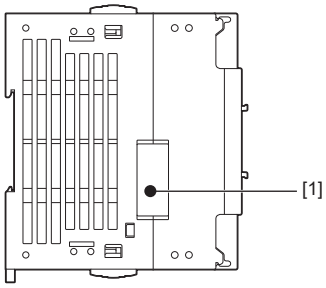

Right side

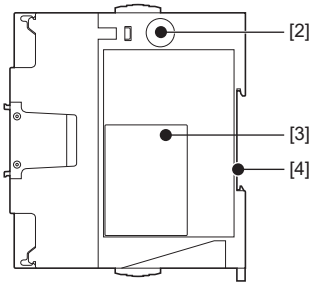

No.	Name	Description
[1]	Expansion adapter connector cover	Cover for protecting the expansion adapter connector. Connect the expansion adapter to the expansion adapter connector under the cover.
[2]	Genuine product certification label	Genuine product certification label to prevent counterfeiting
[3]	Nameplate	The product model name, manufacturer's serial number, power supply specifications, and MAC address are shown. ⚠ is a mark that instructs the use of a copper wire with an appropriate temperature rating (80℃ or more) for wiring.
[4]	DIN rail mounting groove	The module can be installed on a DIN46277 rail (width: 35mm).

Point

Products that do not have the genuine product certification label or nameplate are not covered by the warranty.

Top side/Bottom side

Top side

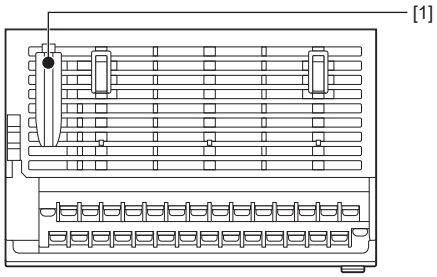

Bottom side

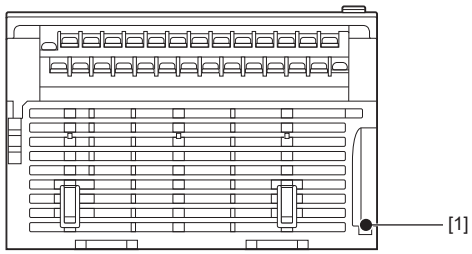

No.	Name	Description
[1]	CPU module fixing screw hole	Screw holes for fixing the CPU module to the control panel

FX5U CPU module

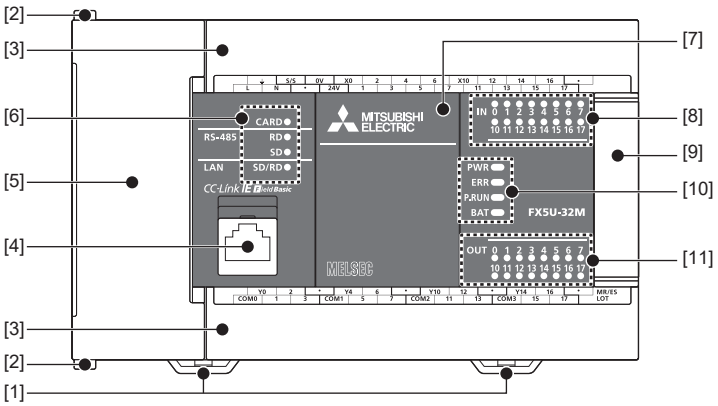

No.	Name	Description
[1]	DIN rail mounting hook	Hook for mounting a CPU module on a DIN rail of DIN46277 (width: 35mm).
[2]	Expansion adapter connecting hooks	When connecting an expansion adapter, secure it with these hooks.
[3]	Terminal block cover	Cover for protecting the terminal block. The cover can be opened for wiring. Keep the cover closed while equipment is running (power is on).
[4]	Built-in Ethernet communication connector	Connector for connection with Ethernet-compatible devices. (with cap) For a connector that is not connected with the Ethernet cable, attach the cap provided as an accessory to block dust or dirt. For details, refer to the following. 📖MELSEC iQ-F FX5 User's Manual (Communication)
[5]	Top cover	Cover for protecting the SD memory card slot, the RUN/STOP/RESET switch, and others. The built-in RS-485 communication terminal block, built-in analog I/O terminal block, RUN/STOP/RESET switch, SD memory card slot, and others are located under this cover.
[6]	CARD LED	Indicates whether an SD memory card can be used or not. On: Can be used or cannot be removed Flashing:In preparation Off: Not inserted or can be removed
	RD LED	Turns on when the CPU module is receiving data through built-in RS-485 communications.
	SD LED	Turns on when the CPU module is sending data through built-in RS-485 communications.
	SD/RD LED	Turns on when the CPU module is sending or receiving data through built-in Ethernet communications.
[7]	Expansion board connector cover	Cover for protecting expansion board connector, battery, or others. Connect the battery under this cover.
[8]	Input display LED	Turns on when input is on.
[9]	Extension connector cover	Cover for protecting the extension connector. Connect the extension cable of an extension module to the extension connector under the cover.
[10]	PWR LED	Indicates whether the CPU module is powered or not. On: Powered Off: Not powered or hardware error (☞ Page 274 Checking with LEDs)
	ERR LED	Indicates the error status of the CPU module. (☞ Page 274 Checking with LEDs) On: Error or hardware error Flashing:Factory default setting, error, hardware error, or resetting Off: Normal operation
	P.RUN LED	Indicates the program running status. On: Normal operation Flashing:Paused, stopped (program mismatched), or online program change (PAUSE or RUN was set at the time of online program change.) (☞ Page 274 Checking with LEDs) Off: Stopped or stop error
	BAT LED	Indicates the battery status. Flashing:Battery error Off: Normal operation (☞ Page 274 Checking with LEDs)
[11]	Output display LED	Turns on when output is on.

With the cover open

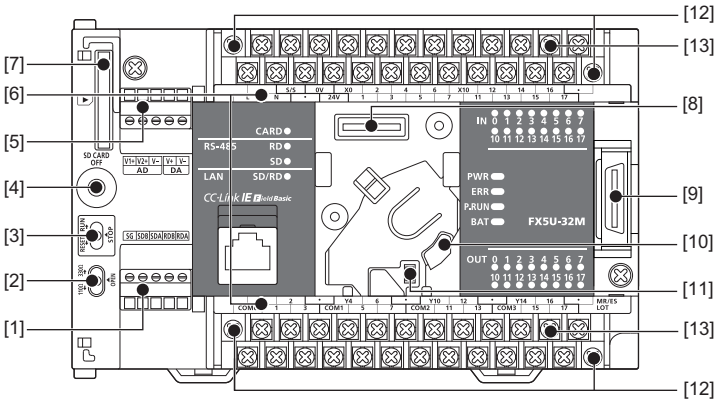

No.	Name	Description
[1]	Built-in RS-485 communication terminal block	Terminal block for connection with RS-485-compatible devices
[2]	RS-485 terminal resistor selector switch	Switch for switching terminal resistance for built-in RS-485 communications.
[3]	RUN/STOP/RESET switch	Switch for operating the CPU module. RUN: Runs the program STOP: Stops the program RESET: Resets the CPU module (Hold the switch on the RESET side for approximately 1 second.)
[4]	SD memory card disable switch	Switch for disabling access to the SD memory card when the SD memory card is to be removed.
[5]	Built-in analog I/O terminal block	Terminal block for using the built-in analog function.
[6]	Terminal names	The signal names for power supply, input, and output terminals are shown. ⏚ shows a function grounding terminal.
[7]	SD memory card slot	Slot for inserting an SD memory card.
[8]	Expansion board connector	Connector for connecting an expansion board.
[9]	Extension connector	Connector for connecting the extension cable of an extension module.
[10]	Battery holder	Holder for storing an optional battery.
[11]	Battery connector	Connector for connecting an optional battery.
[12]	Terminal block mounting screws	Gradually loosen the left and right screws (alternatingly) to remove the upper part of the terminal block.
[13]	Terminal	Terminals for power, input, and output. For details on the terminal layout, refer to ☞ Page 105 Power, input/output terminal block.

Point

Use a tool such as a screwdriver to operate the RS-485 terminal resistor selector switch. Note that the tip of a tool does not damage the switch or case.

Left side/Right side

Left side

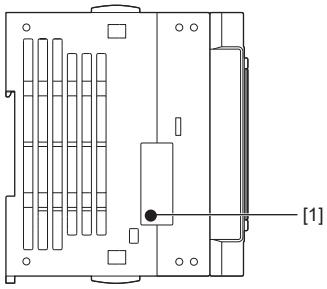

Right side

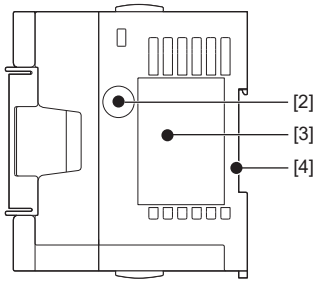

No.	Name	Description
[1]	Expansion adapter connector cover	Cover for protecting the expansion adapter connector. Connect the expansion adapter to the expansion adapter connector under the cover.
[2]	Genuine product certification label	Genuine product certification label to prevent counterfeiting
[3]	Nameplate	The product model name, manufacturer's serial number, power supply specifications, and MAC address are shown.
[4]	DIN rail mounting groove	The module can be installed on a DIN46277 rail (width: 35mm).

Point

Products that do not have the genuine product certification label or nameplate are not covered by the warranty.

Top side/Bottom side

Top side

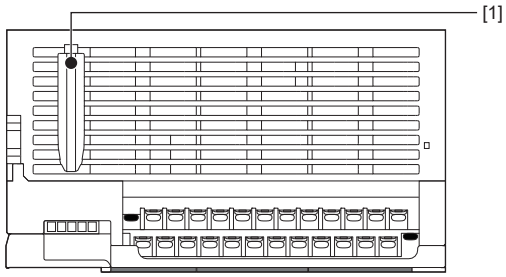

Bottom side

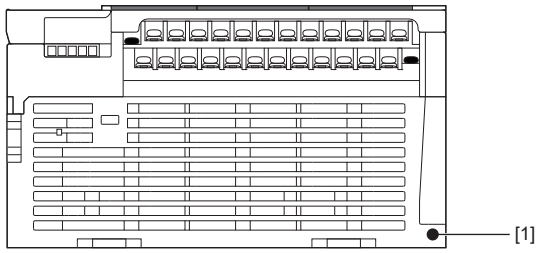

No.	Name	Description
[1]	CPU module fixing screw hole	Screw holes for fixing the CPU module to the control panel. (For the FX5U-64M□/80M□, there are four screw holes.)

FX5UC CPU module

Connector type

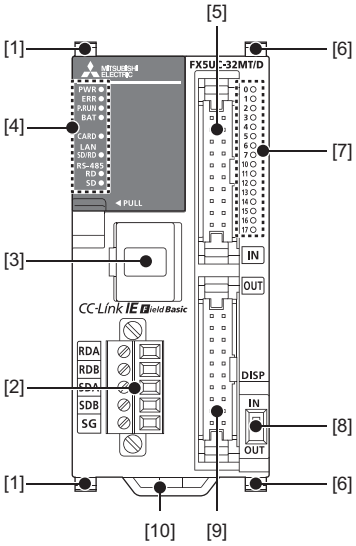

Spring clamp terminal block type

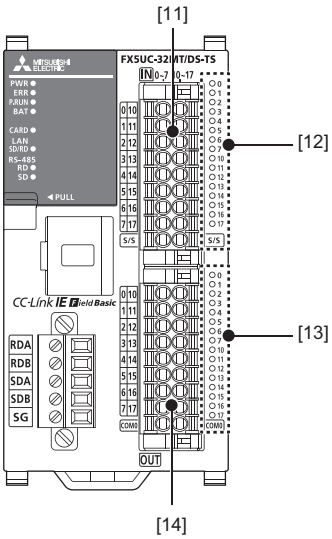

With cover open

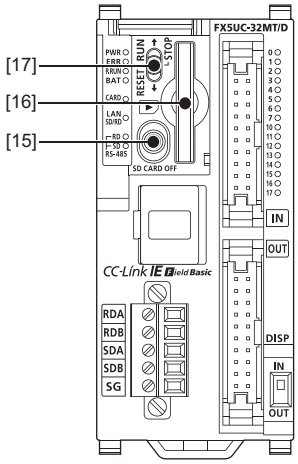

No.	Name		Description
[1]	Expansion adapter connecting hooks		When connecting an expansion adapter, secure it with these hooks.
[2]	Built-in RS-485 communication terminal block		Terminal block for connection with RS-485-compatible devices
[3]	Built-in Ethernet communication connector		Connector for connection with Ethernet-compatible devices. (with cap) For a connector that is not connected with the Ethernet cable, attach the cap provided as an accessory to block dust or dirt. For details, refer to the following. MELSEC iQ-F FX5 User's Manual (Communication)
[4]	Operation status display LED	PWR LED	Indicates whether the CPU module is powered or not. On: Powered Off: Not powered or hardware error
		ERR LED	Indicates the error status of the CPU module. On: Error or hardware error Flashing:Factory default setting, error, hardware error, or resetting Off: Normal operation
		P.RUN LED	Indicates the program running status. On: Normal operation Flashing:Paused, stopped (program mismatched), or online program change (PAUSE or RUN was set at the time of online program change.) Off: Stopped or stop error
		BAT LED	Indicates the battery status. Flashing:Battery error Off: Normal operation
		CARD LED	Indicates whether an SD memory card can be used or not. On: Can be used or cannot be removed Flashing:In preparation Off: Not inserted or can be removed
		SD/RD LED	Turns on when the CPU module is sending or receiving data through built-in Ethernet communications.
		RD LED	Turns on when the CPU module is receiving data through built-in RS-485 communications.
		SD LED	Turns on when the CPU module is sending data through built-in RS-485 communications.
[5]	Input connector		Connector for connecting input signal cables. For details on the terminal layout, refer to ☞ Page 105 Power, input/output terminal block.
[6]	Extension module connecting hook		When connecting an expansion module, secure it with these hooks.
[7]	I/O display LED		Turns on when input or output is on.
[8]	DISP switch		Switches between input/output of the I/O display LED.
[9]	Output connector		Connector for connecting output signal cables. For details on the terminal layout, refer to ☞ Page 105 Power, input/output terminal block.
[10]	DIN rail mounting hook		Hook for mounting a CPU module on a DIN rail of DIN46277 (width: 35mm).

No.	Name	Description
[11]	Input terminal	Terminals for input. For details on the terminal layout, refer to ☞ Page 105 Power, input/output terminal block.
[12]	Input display LED	Turns on when input is on.
[13]	Output display LED	Turns on when output is on.
[14]	Output terminal	Terminals for output. For details on the terminal layout, refer to ☞ Page 105 Power, input/output terminal block.
[15]	SD memory card disable switch	Switch for disabling access to the SD memory card when the SD memory card is to be removed.
[16]	SD memory card slot	Slot for inserting an SD memory card.
[17]	RUN/STOP/RESET switch	Switch for operating the CPU module. RUN: Runs the program STOP: Stops the program RESET: Resets the CPU module (Hold the switch on the RESET side for approximately 1 second.)

Left side/Right side

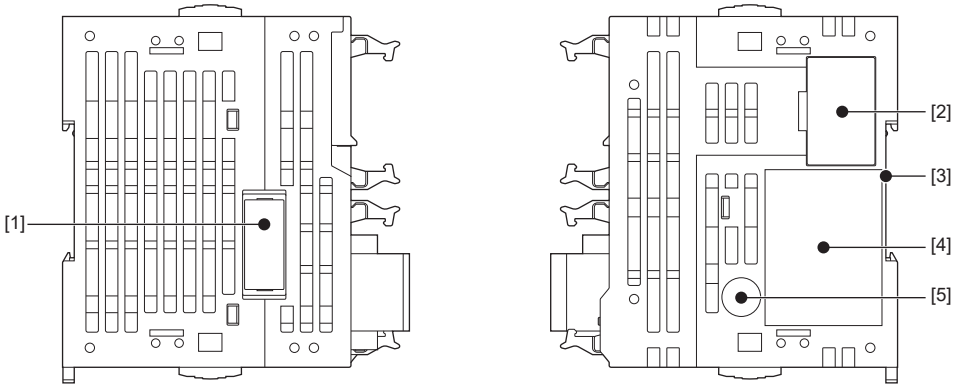

No.	Name	Description
[1]	Expansion adapter connector cover	Cover for protecting the expansion adapter connector.
[2]	Extension connector cover	Cover for protecting the subsequent extension connector.
[3]	DIN rail mounting groove	The module can be installed on a DIN46277 rail (width: 35mm).
[4]	Nameplate printing	The product model name, manufacturer's serial number, power supply specifications, and MAC address are shown. ⚠ is a mark that instructs the use of a cable with an appropriate temperature rating (80℃ or more) for wiring.
[5]	Genuine product certification label	Genuine product certification label to prevent counterfeiting

Point

Products that do not have the genuine product certification label or nameplate are not covered by the warranty.

Top side/Bottom side

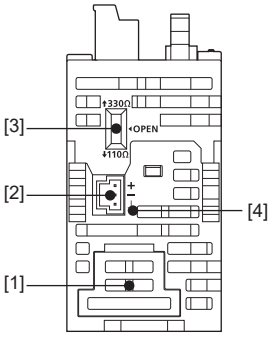

No.	Name	Description
[1]	Battery cover	Cover for protecting the battery connecting connector.
[2]	Power connector for CPU module	Connector for connecting power cables.
[3]	RS-485 terminal resistor selector switch	Switch for switching terminal resistance for built-in RS-485 communications.
[4]	Terminal names	⏚ shows a function grounding terminal.

Point

Use a tool such as a screwdriver to operate the RS-485 terminal resistor selector switch. Note that the tip of a tool does not damage the switch or case.

3.2 I/O Module

This section describes the part names of the I/O modules.

Input module, output module, I/O module

Extension cable type

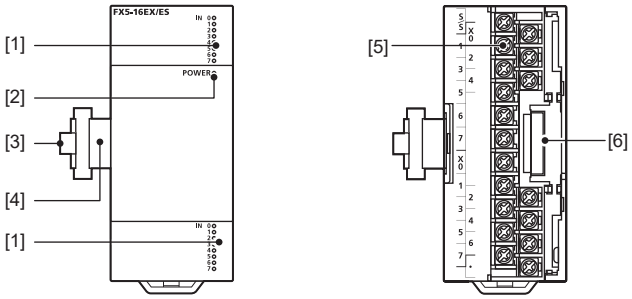

No.	Name	Description
[1]	Input display LED, Output display LED	Turns on when input or output is on.
[2]	POWER LED	Indicates whether the input modules/output modules are powered or not. On: Powered Off: Not powered or hardware error
[3]	Pullout tab	They are used when drawing out an extension cable.
[4]	Extension cable	Cable connected to extend modules
[5]	Terminal	Terminals for input, and output. For details on the terminal layout, refer to the following. Input module: ☞ Page 122 Input Module Output module: ☞ Page 126 Output Module I/O module: ☞ Page 130 I/O Module
[6]	Extension connector	Connector for connecting the extension cable of an extension module.

Extension connector type

■Input/output connection type: Connector

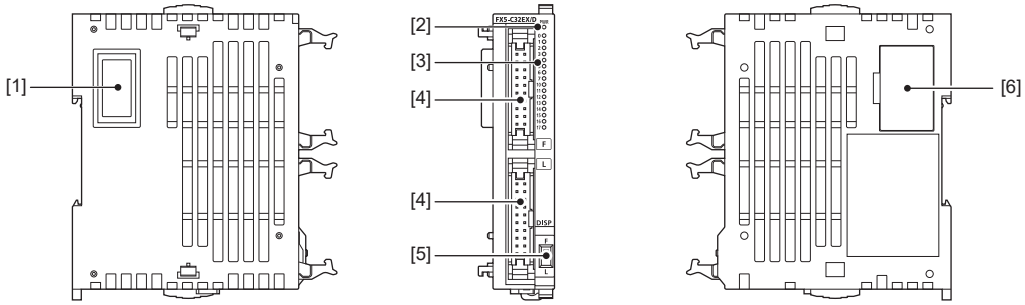

No.	Name	Description
[1]	Extension connector	Connector connected to extend modules
[2]	PWR/POWER LED	Indicates whether the input modules/output modules are powered or not. On: Powered Off: Not powered or hardware error
[3]	I/O display LED	Turns on when input or output is on.
[4]	I/O connectors	Connector for connecting input signal cables or output signal cables For details on the terminal layout, refer to ☞ Page 130 I/O Module.
[5]	DISP switch	Switches between the display of lower/higher numbers of the input display LED or output display LED. Lower number: F Higher number: L
[6]	Extension connector	Connector for connecting the extension connector of an extension module

■Input/output connection type: Spring clamp terminal block

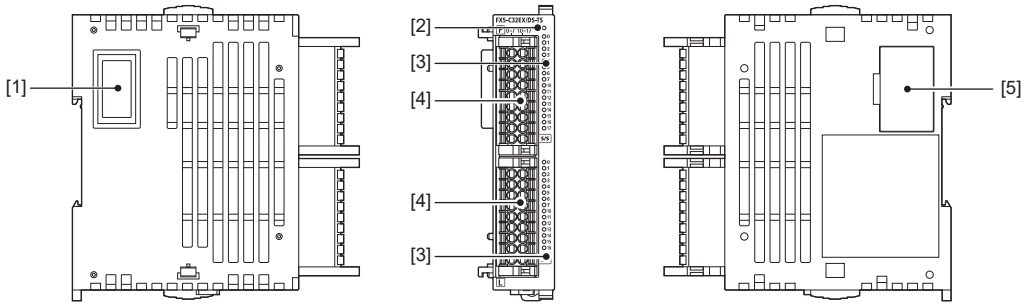

No.	Name	Description
[1]	Extension connector	Connector connected to extend modules
[2]	PWR/POWER LED	Indicates whether the input modules/output modules are powered or not. On: Powered Off: Not powered or hardware error
[3]	I/O display LED	Turns on when input or output is on.
[4]	Terminal	Terminals for input, and output. For details on the terminal layout, refer to ☞ Page 130 I/O Module.
[5]	Extension connector	Connector for connecting the extension connector of an extension module

Powered input/output module

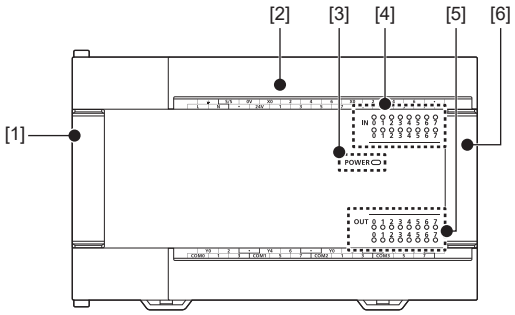

With the cover removed

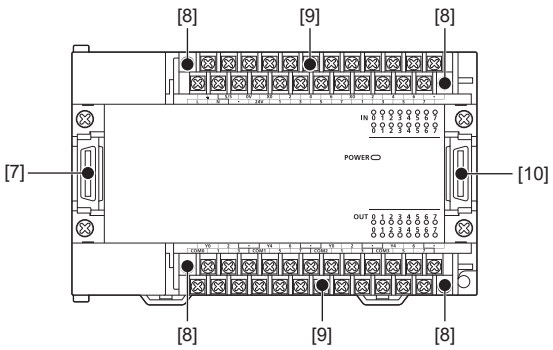

No.	Name	Description
[1]	Extension connector cover (for preceding module)	Cover for protecting the extension connector cover (for preceding module).
[2]	Terminal block cover	Cover for protecting the terminal block. The cover can be opened for wiring. Keep the cover closed while equipment is running (power is on).
[3]	POWER LED	Indicates whether the powered input/output module are powered or not. On: Powered Off: Not powered or hardware error
[4]	Input display LED	Turns on when input is on.
[5]	Output display LED	Turns on when output is on.
[6]	Extension connector cover	Cover for protecting the extension connector. Connect the extension cable of an extension module to the extension connector under the cover.
[7]	Extension connector (for preceding module)	Connector for connecting the supplied extension cable that connects to the preceding module (the CPU module side).
[8]	Terminal block mounting screws	Gradually loosen the left and right screws (alternatingly) to remove the upper part of the terminal block.
[9]	Terminal	Terminals for power, input, and output. ⏚ shows a function grounding terminal. For details on the terminal layout, refer to ☞ Page 136 Powered I/O Module.
[10]	Extension connector	Connector for connecting the extension cable of an extension module.

High-speed pulse input/output module

With the cover removed

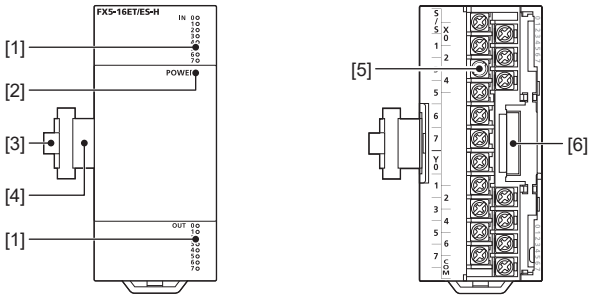

No.	Name	Description
[1]	Input display LED, Output display LED	Turns on when input or output is on.
[2]	POWER LED	Indicates whether the input modules/output modules are powered or not. On Powered Off: Not powered or hardware error
[3]	Pullout tab	They are used when drawing out an extension cable.
[4]	Extension cable	Cable connected to extend modules
[5]	Terminal	Terminals for input, and output. For details on the terminal layout, refer to ☞ Page 139 High-Speed Pulse Input/Output Module.
[6]	Extension connector	Connector for connecting the extension cable of an extension module.

3.3 Extension Power Supply Module

This section describes the part names of the extension power supply module.

Extension cable type

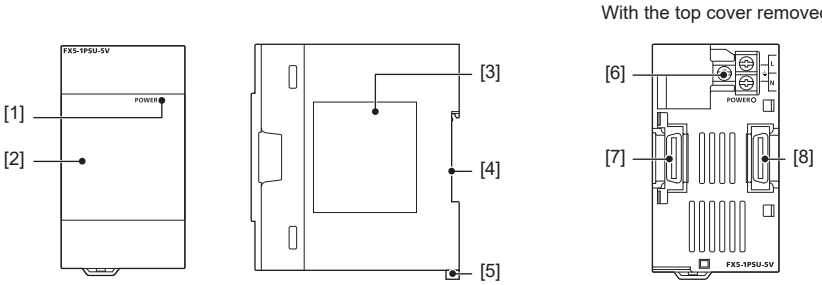

No.	Name	Description
[1]	POWER LED	Indicates whether the input modules/output modules are powered or not. On: Powered Off: Not powered or hardware error
[2]	Top cover	Cover for protecting the extension connector and power terminal block.
[3]	Nameplate	The product model name, manufacturer's serial number, and power supply specifications are shown.
[4]	DIN rail mounting groove	The module can be installed on a DIN46277 rail (width: 35mm).
[5]	DIN rail mounting hook	Hook for mounting on a DIN rail of DIN46277 (width: 35mm).
[6]	Power terminal block	The signal names for power supply, input, and output terminals are shown. ⏚ shows a function grounding terminal.
[7]	Extension connector (for preceding module)	Connector for connecting the supplied extension cable that connects to the preceding module (the CPU module side).
[8]	Extension connector	Connector for connecting the extension cable of an extension module.

Extension connector type

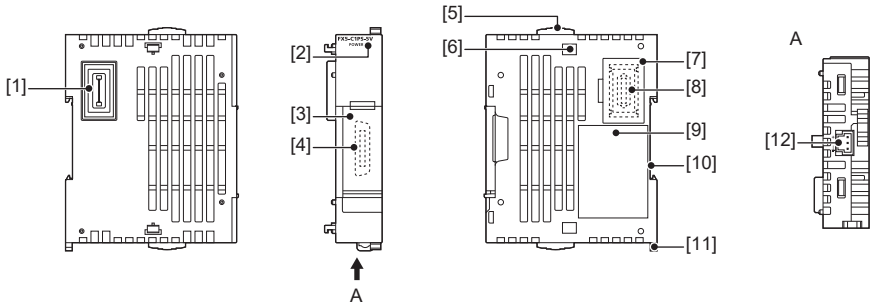

No.	Name	Description
[1]	Extension connector (for preceding module)	Connector for connecting the supplied extension cable that connects to the preceding module (the CPU module side).
[2]	POWER LED	Indicates whether the input modules/output modules are powered or not. On: Powered Off: Not powered or hardware error
[3]	Extension connector cover	Cover for protecting the extension connector. Connect the extension cable of an extension module to the extension connector under the cover.
[4]	Extension connector (for the extension cable type)	Connector for connecting the extension cable of an extension module (extension cable type).
[5]	Extension module connecting hook	When connecting an extension module, secure it with these hooks.
[6]	Extension module connecting hole	An extension module connecting hook is inserted here to fix the module.
[7]	Extension connector cover	Cover for protecting the extension connector. Connect the extension connector of an extension module to the extension connector under the cover.
[8]	Extension connector (for the extension connector type)	Connector for connecting the extension connector of an extension module (extension connector type).
[9]	Nameplate	The product model name, manufacturer's serial number, and power supply specifications are shown.
[10]	DIN rail mounting groove	The module can be installed on a DIN46277 rail (width: 35mm).
[11]	DIN rail mounting hook	Hook for mounting on a DIN rail of DIN46277 (width: 35mm).
[12]	Terminal block	Connector for connecting power cables.

3.4 Connector Conversion Module

This section describes the part names of the connector conversion module.

FX5-CNV-IF

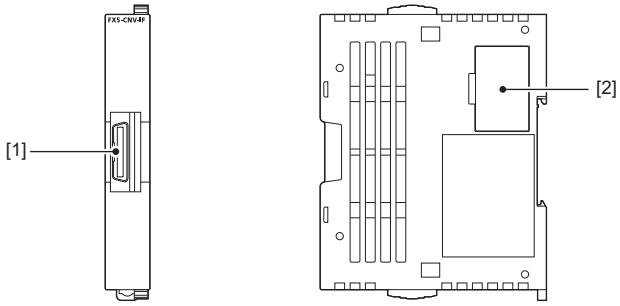

No.	Name	Description
[1]	Extension connector (for preceding module)	Connector for connecting the supplied extension cable that connects to the preceding module (the CPU module side).
[2]	Extension connector	Connector for connecting the extension connector of an extension module (extension connector type).

FX5-CNV-IFC

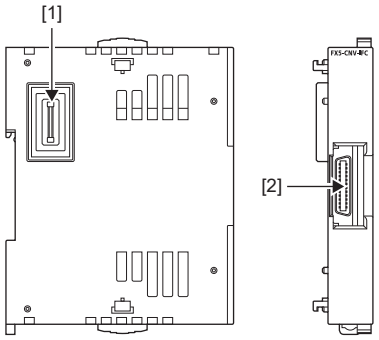

No.	Name	Description
[1]	Extension connector (for preceding module)	Extension connector for connecting to the preceding module (the CPU module side).
[2]	Extension connector	Connector for connecting the extension cable of an extension module (extension cable type).

3.5 SD Memory Card Module

This section describes the part names of the SD memory card module.

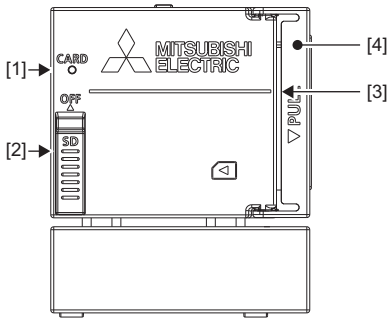

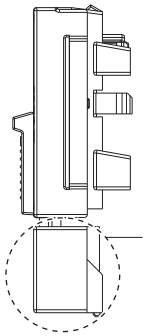

When the module is used with a communication board, cut this area off.

No.	Name		
[1]	Operation status display LED (CARD LED)	Green	Turns on when the SD memory card can be used or cannot be removed. Flashing when in preparation. Off when the SD memory card is not inserted or can be removed.
[2]	SD memory card disable switch*1	ON side (down): The SD memory card can be used. OFF side (up): Use of the SD memory card is stopped (used only for removal).	
[3]	SD memory card slot		
[4]	SD memory card slot cover		

*1 The figure shows the state in which the switch is on the ON side (down).

3.6 SD Memory Card

This section describes the part names of the SD memory card.

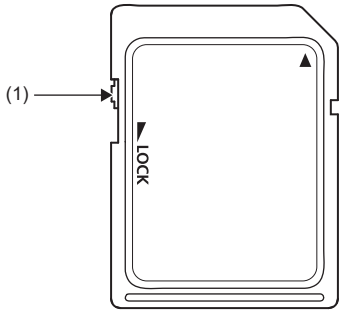

No.	Name	Description
[1]	Write protect switch	Setting the switch in the lock position prevents the data in the SD memory card from being deleted and overwritten.

4 GENERAL SPECIFICATIONS

This chapter describes the common specifications for the CPU module, I/O module, extension power supply module, connector conversion module, expansion board, and expansion adapter.

Item		Specifications				
Operating ambient temperature*1*2	When using FX5S/ FX5UJ CPU module	0 to 55℃, non-freezing				
	When using FX5U/ FX5UC CPU module	-20 to 55℃, non-freezing*3*4				
Storage ambient temperature		-25 to 75℃, non-freezing				
Operating ambient humidity		5 to 95%RH, non-condensation*5				
Storage ambient humidity		5 to 95%RH, non-condensation				
Vibration resistance*6*7		—	Frequency	Acceleration	Half amplitude	Sweep count
		Installed on DIN rail	5 to 8.4Hz	—	1.75mm	10 times each in X, Y, Z directions (80min in each direction)
			8.4 to 150Hz	4.9m/s²	—	
		Direct installing	5 to 8.4Hz	—	3.5mm	
			8.4 to 150Hz	9.8m/s²	—	
Shock resistance*6		147m/s², Action time: 11ms, 3 times by half-sine pulse in each direction X, Y, and Z				
Noise durability*8		By noise simulator at noise voltage of 1000Vp-p, noise width of 1μs and period of 30 to 100Hz				
Grounding		Ground resistance of 100Ω or less <Common grounding with a heavy electrical system is not allowed.>*9				
Working atmosphere		Free from corrosive or flammable gas and excessive conductive dust				
Operating altitude*10		0 to 2000m				
Installation location		Inside a control panel*11				
Overvoltage category*12		Ⅱ or less				
Pollution degree*13		2 or less				

*1 The simultaneous ON ratio of available programmable controller inputs or outputs changes with respect to the ambient temperature, For details, refer to the following.
☞ Page 99 Input/Output Derating Curve

*2 For details on intelligent function modules, refer to manuals of each product.

*3 The operating ambient temperature is 0 to 55℃ for products manufactured before June 2016.

*4 In the case where operating ambient temperature is lower than 0℃, the specifications are different from the above description. For details, refer to ☞ Page 61 Precautions for operating ambient temperature.

*5 When used in a low-temperature environment, use in an environment with no sudden temperature changes. When there are sudden temperature changes because of opening/closing of the control panel or other reasons, condensation may occur, which may cause a fire, fault, or malfunction. Furthermore, use an air conditioner in dehumidifier mode to prevent condensation.

*6 The criterion is shown in IEC 61131-2.

*7 When the system has equipment which specification values are lower than above mentioned vibration resistance specification values, the vibration resistance specification of the whole system is corresponding to the lower specification.

*8 When using the FX5 safety extension modules under the severe noise environment, implement external noise countermeasures with a surge absorber and ferrite core.

*9 For grounding, refer to ☞ Page 187 Grounding.

*10 The programmable controller cannot be used at a pressure higher than the atmospheric pressure to avoid damage.

*11 The programmable controller is assumed to be installed in an environment equivalent to indoor.

*12 This indicates the section of the power supply to which the equipment is assumed to be connected between the public electrical power distribution network and the machinery within premises. Category Ⅱ applies to equipment for which electrical power is supplied from fixed facilities. The surge voltage withstand level for up to the rated voltage of 300V is 2500V.

*13 This index indicates the degree to which conductive material is generated in the environment in which the equipment is used. Pollution level 2 is when only non-conductive pollution occurs. Temporary conductivity caused by condensation must be expected occasionally.

Dielectric withstand voltage test and insulation resistance test

For dielectric withstand voltage tests and insulation resistance tests, apply the voltages shown in the table below between each terminal and the CPU module ground terminal or powered I/O module ground terminal.

■CPU module, I/O module

Ground terminal	Terminal		Dielectric withstand voltage	Insulation resistance
Ground terminal of CPU module or powered I/O module	Power supply terminal (AC power supply)	AC power supply type module	1.5kVAC for one minute	10MΩ or higher by 500VDC insulation resistance tester
	Power supply terminal (DC power supply)	DC power supply type module	500VAC for one minute	
	24VDC service power supply	Module with 24VDC service power supply	500VAC for one minute	
	Input terminal (24VDC)	Module with input circuit	500VAC for one minute	
	Output terminal (relay)	Module with relay output circuit	1.5kVAC for one minute	
	Output terminal (transistor)	Module with transistor output circuit	500VAC for one minute	

■Expansion board, expansion adapter

Ground terminal	Terminal	Dielectric withstand voltage	Insulation resistance
Ground terminal of CPU module	Terminal of expansion board	Since the expansion board and CPU module are not insulated, it is not allowed to perform the dielectric withstand voltage test and insulation resistance test between them.	
Ground terminal of CPU module or expansion adapter	Terminal of expansion adapter	500VAC for one minute	10MΩ or higher by 500VDC insulation resistance tester

For dielectric withstand voltage test and insulation resistance test of each product, refer to manuals of each product.

■Intelligent function module, FX5 safety extension module

For information concerning dielectric withstand voltage and insulation resistance of the following modules, refer to the user's manuals of each module.

- Intelligent function module
- FX5 safety extension module

5 CPU MODULE PERFORMANCE SPECIFICATIONS

5.1 CPU and Memory Specifications

This sections describes the performance specifications of the CPU module.

Item		Specifications			
		FX5S	FX5UJ	FX5U	FX5UC
Control Method		Stored-program repetitive operation			
Input/output control system		Refresh system (Direct access input/output allowed by specification of direct access input/output (DX, DY))			
Programming specifications	Programming language	Ladder diagram (LD), structured text (ST), function block diagram/ladder diagram (FBD/LD), sequential function chart (SFC)*1			
	Programming extension function	Function block (FB), function (FUN), label programming (local/global)			
	Constant scan	0.5 to 2000ms (can be set in increments of 0.1ms)		0.2 to 2000ms (can be set in increments of 0.1ms)	
	Fixed cycle interrupt	1 to 60000ms (can be set in increments of 1ms)			
	Timer performance specifications	100ms, 10ms, 1ms			
	Number of program executions	32			
	Number of FB files	16 (up to 15 for user)			
Operation specifications	Execution type	Standby type, initial execution type, scan execution type, event execution type			
	Interrupt type	Internal timer interrupt, input interruption, high-speed comparison match interrupt	Internal timer interrupt, input interruption, high-speed comparison match interrupt, interrupt by modules*2		
Command processing time	LD X0	84ns	34ns	34ns*3	
	MOV D0 D1	100ns	34ns	34ns*3	
Memory capacity	Program capacity	48k steps (96 kbytes, flash memory)		64k steps/128k steps*1 (128 kbytes/256 kbytes, flash memory)	
	SD memory card	Memory card capacity (SD/SDHC memory card: Maximum 16 Gbytes)			
	Device/label memory	120 kbytes		150 kbytes*1	
	Data memory/standard ROM	5 Mbytes			
Flash memory (Flash ROM) write count		Maximum 20000 times			
File storage capacity	Device/label memory	1			
	Data memory	Number of program files: 32, Number of FB files: 16			
	SD memory card	NZ1MEM-2GBSD: 511*4			
		NZ1MEM-4GBSD, NZ1MEM-8GBSD, NZ1MEM-16GBSD: 65534*4			
Clock function	Display data	Year, month, day, hour, minute, second, day of week (automatic leap year adjustment)			
	Accuracy	Differences per month ±45 sec./25℃ (TYP)			
Power failure retention (clock data*5)	Retention method	Large-capacity capacitor			
	Retention time	15 days (Ambient temperature: 25℃)		10 days (Ambient temperature: 25℃)*6	
Number of I/O points	(1) Number of I/O points	80 points or less	256 points or less	256 points or less/384 points or less*1	
	(2) Number of remote I/O points	—	256 points or less	384 points or less/512 points or less*1	
	Total number of points of (1) and (2)	80 points or less	256 points or less	512 points or less	
Power failure retention (device)	Power failure retention capacity	Maximum 5k words	Maximum 12k words	Maximum 12k words*7	

*1 For supported versions, refer to the following.
MELSEC iQ-F FX5 User's Manual (Application)
*2 Interrupt from the intelligent function module and high-speed pulse input/output module.
*3 When the program capacity is 64k steps.
*4 The value listed above indicates the number of files stored in the root folder.
*5 Clock data is retained using the power accumulated in a large-capacity capacitor incorporated into the programmable controller. When voltage of the large-capacity capacitor drops, clock data is no longer accurately retained. The retention time using the capacitor is the time when fully charged (power-on of the programmable controller over 30 minutes). How long the capacitor can hold the data depends on the operating ambient temperature. When the operating ambient temperature is high, the retention time is short.
*6 The FX5U/FX5UC CPU module can supply backup power using an optional battery. (☞ Page 157 BATTERY PERFORMANCE SPECIFICATIONS)
*7 Backup power can be supplied to all devices in the device (high-speed) area. When a battery is used, devices in the device (standard) area can also be backed up.

Number of device points

Item			Base	Maximum number of points			
				FX5S	FX5UJ	FX5U	FX5UC
Number of user device points	Input relay (X)		8	1024 points*1			
	Output relay (Y)		8	1024 points*1			
	Internal relay (M)		10	32768 points*3	7680 points	32768 points*3	
	Latch relay (L)		10	32768 points*3	7680 points	32768 points*3	
	Link relay (B)		16	32768 points*3	2048 points	32768 points*3	
	Annunciator (F)		10	32768 points*3	128 points	32768 points*3	
	Link special relay (SB)		16	32768 points*3	2048 points	32768 points*3	
	Step relay (S)		10	4096 points (fixed)	4096 points	4096 points (fixed)	
	Timer system	Timer (T)	10	1024 points*3	512 points	1024 points*3	
	Accumulation timer system	Accumulation timer (ST)	10	1024 points*3	16 points	1024 points*3	
	Counter system	Counter (C)	10	1024 points*3	256 points	1024 points*3	
		Long counter (LC)	10	1024 points*3	64 points	1024 points*3	
	Data register (D)		10	8000 points*3	8000 points	8000 points*3	
	Link register (W)		16	32768 points*3	1024 points	32768 points*3	
	Link special register (SW)		16	32768 points*3	1024 points	32768 points*3	
Number of system device points	Special relay (SM)		10	10000 points (fixed)	10000 points	10000 points (fixed)	
	Special register (SD)		10	12000 points (fixed)	12000 points	12000 points (fixed)	
Module access device	Intelligent function module device		10	—	Depends on the intelligent function module.	65536 points (specified by U□\G□)	
Number of index register points	Index register (Z)		10	24 points*4	20 points	24 points*4	
	Long index register (LZ)		10	12 points*4	2 points	12 points*4	
Number of file register points	File register (R)		10	32768 points*3	32768 points	32768 points*3	
	Extended file register (ER)		10	32768 points (stored in SD memory card)			
Number of nesting points	Nesting (N)		10	15 points			
Number of pointer points	Pointer (P)		10	4096 points	2048 points	4096 points	
	Interrupt pointer (I)		10	32 points	178 points	178 points (fixed)	
Number of SFC points	SFC block device (BL)		10	32 points			
	SFC transition device (TR)		10	0 points (Used only as device comments.)			
Other	Decimal constant (K)	Signed	—	16 bits: -32768 to +32767, 32 bits: -2147483648 to +2147483647			
		Unsigned	—	16 bits: 0 to 65535, 32 bits: 0 to 4294967295			
	Hexadecimal constant (H)		—	16 bits: 0 to FFFF, 32 bits: 0 to FFFFFFFF			
	Real constant (E)	Single precision	—	E-3.40282347+38 to E-1.17549435-38, 0, E1.17549435-38 to E3.40282347+38			
	String		—	Shift-JIS code maximum 255 single-byte characters (256 including NULL)		Shift-JIS code maximum 255 single-byte characters (256 including NULL) Unicode maximum 255 characters (256 including NULL)*2	

*1 The total of Xs and Ys assigned to input/output points is as follows: FX5S CPU module: maximum 80, FX5UJ CPU module: maximum 256, FX5U/FX5UC CPU modules: maximum 256/384

*2 For supported versions, refer to the following.
MELSEC iQ-F FX5 User's Manual (Application)

*3 Can be changed with parameters within the capacity range of the CPU built-in memory.

*4 The sum of index register (Z) and long index register (LZ) is 24 words.

5.2 Power Supply Specifications

This sections describes the power supply specifications of the CPU module.

AC power supply

Item		Specifications		
		FX5S	FX5UJ	FX5U
Rated voltage		100 to 240VAC		
Voltage fluctuation range		-15%, +10%		
Rated frequency		50/60Hz		
Allowable instantaneous power failure time[*1]		Operation can be continued upon occurrence of instantaneous power failure for 10ms or less.	Operation can be continued upon occurrence of instantaneous power failure for 10ms or less. When the supply voltage is 200VAC or higher, the time can be changed between 10 to 100ms by editing the user program.	
Power fuse		250V, 3.15A time-lag fuse		FX5U-32M□: 250V 3.15A time-lag fuse FX5U-64M□, FX5U-80M□: 250V 5A time-lag fuse
Rush current		30A max. 5ms or less/100VAC 50A max. 5ms or less/200VAC	FX5UJ-24M□: 25A max. 5ms or less/100VAC 50A max. 5ms or less/200VAC FX5UJ-40M□, FX5UJ-60M□: 30A max. 5ms or less/100VAC 50A max. 5ms or less/200VAC	FX5U-32M□: 25A max. 5ms or less/100VAC 50A max. 5ms or less/200VAC FX5U-64M□, FX5U-80M□: 30A max. 5ms or less/100VAC 60A max. 5ms or less/200VAC
Power consumption[*2]		FX5S-30M□: 28W FX5S-40M□: 30W FX5S-60M□: 33W FX5S-80M□[*3]: 36W	FX5UJ-24M□: 30W FX5UJ-40M□: 32W FX5UJ-60M□: 35W	FX5U-32M□: 30W FX5U-64M□: 40W FX5U-80M□: 45W
24VDC service power supply[*4*5]	When 24VDC service power supply is used for the input circuit of the CPU module	400mA[*6]	400mA	FX5U-32M□: 400mA [300mA[*7]] FX5U-64M□, FX5U-80M□: 600mA [300mA[*7]]
	When external power supply is used for the input circuit of the CPU module		FX5UJ-24M□: 460mA FX5UJ-40M□: 500mA FX5UJ-60M□: 550mA	FX5U-32M□: 480mA [380mA[*7]] FX5U-64M□: 740mA [440mA[*7]] FX5U-80M□: 770mA [470mA[*7]]
5VDC built-in power supply		—		FX5U-32M□: 900mA FX5U-64M□, FX5U-80M□: 1100mA

*1 The FX5 safety extension module is not subject to the allowable momentary power failure time.

*2 This value is the value when all 24VDC service power supplies are used in the maximum configuration connectable to the CPU module. (The current of the input circuit is included.)

*3 Area-specific model

*4 When I/O modules are connected, they consume current from the 24VDC service power supply. (☞ Page 56 24VDC service power supply)

*5 The FX5 safety extension module cannot use the 24VDC service power supply.

*6 Use as a power supply for input devices. (Cannot be used as an external power supply for expansion adapters.)

*7 The value in [] is capacity of 24 V DC service power supply in the case where operating ambient temperature is lower than 0℃.

Point

The following shows the power failure detection period of the AC power supply. (FX5UJ/FX5U CPU modules only)

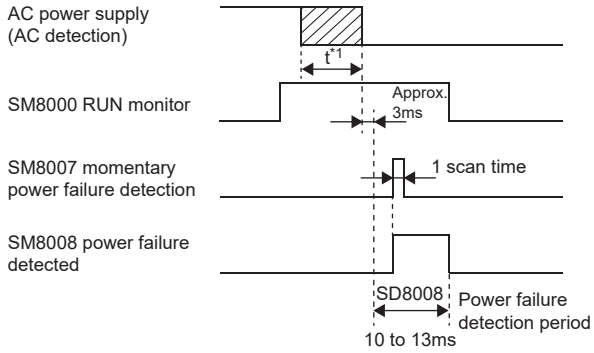

*1 t: 0ms to approx. 60ms for 100VAC system,
0ms to approx. 100ms for 200VAC system

DC power supply

Item	Specifications			
	FX5S	FX5UJ	FX5U	FX5UC
Rated voltage	24VDC			
Voltage fluctuation range	-30%, +20%			+20%, -15%
Allowable instantaneous power failure time*1	Operation can be continued upon occurrence of instantaneous power failure for 5ms or less.			
Power fuse	250V 5A time-lag fuse		FX5U-32M□: 250V 3.15A time-lag fuse FX5U-64M□, FX5U-80M□: 250V 5A time-lag fuse	125V, 3.15A time-lag fuse
Rush current	40A max. 7.1ms or less/ 24VDC	33A max. 6.8ms or less/ 24VDC	FX5U-32M□: 50A max. 0.5ms or less/24VDC FX5U-64M□, FX5U-80M□: 65A max. 2.0ms or less/ 24VDC	FX5UC-32M□: 35A max. 0.5ms or less/24VDC FX5UC-64M□, FX5UC-96M□: 40A max. 0.5ms or less/24VDC
Power consumption*2	FX5S-30M□: 15W FX5S-40M□: 15W FX5S-60M□: 16W FX5S-80M□*3: 17W	FX5UJ-24M□: 34W FX5UJ-40M□: 35W FX5UJ-60M□: 36W	FX5U-32M□: 30W FX5U-64M□: 40W FX5U-80M□: 45W	FX5UC-32M□: 5W/24VDC [30W/24VDC +20%, -15%] FX5UC-64M□: 8W/24VDC [33W/24VDC +20%, -15%] FX5UC-96M□: 11W/24VDC [36W/24VDC +20%, -15%]
24VDC built-in power supply capacity	—	FX5UJ-24M□: 460mA FX5UJ-40M□: 500mA FX5UJ-60M□: 550mA	FX5U-32M□: 480mA (360mA)*4 FX5U-64M□: 740mA (530mA)*4 FX5U-80M□: 770mA (560mA)*4	500mA
5VDC built-in power supply	—	—	FX5U-32M□: 900mA (775mA)*4 FX5U-64M□, FX5U-80M□: 1100mA (975mA)*4	720mA

*1 The FX5 safety extension module is not subject to the allowable momentary power failure time.
*2 Maximum consumption value when using the maximum configuration connectable to the CPU module.
*3 Area-specific model
*4 The value in () is the capacity of the power supply when the supply voltage is 16.8 to 19.2VDC.

Point

The following shows the power failure detection period of the DC power supply. (FX5UJ/FX5U/FX5UC CPU modules only)

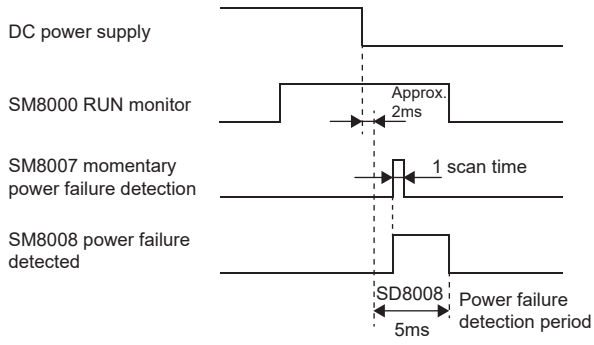

5.3 Input Specifications

This section describes the input specifications of the CPU module.

Item		Specifications			
		FX5S	FX5UJ	FX5U	FX5UC
Number of input points		FX5S-30M□: 16 points FX5S-40M□: 24 points FX5S-60M□: 36 points FX5S-80M□[*1]: 48 points	FX5UJ-24M□: 14 points FX5UJ-40M□: 24 points FX5UJ-60M□: 36 points	FX5U-32M□: 16 points FX5U-64M□: 32 points FX5U-80M□: 40 points	FX5UC-32M□: 16 points FX5UC-64M□: 32 points FX5UC-96M□: 48 points
Connection type		Non-removable terminal block (M3 screws)	Removable terminal block (M3 screws)		FX5UC-32M□: • Connector • Spring clamp terminal block FX5UC-64M□, FX5UC-96M□: • Connector
Input type		Sink/source			FX5UC-□MT/D: sink FX5UC-□M□/DS□: sink/source
Input signal voltage		24VDC +20%, -15%			
Input signal current		X0 to X7: 5.1mA/24VDC X10 or later: 4.0mA/24VDC	X0 to X7: 5.3mA/24VDC X10 or later: 4.0mA/24VDC	X0 to X17: 5.3mA/24VDC X20 or later: 4.0mA/24VDC	
Input impedance		X0 to X7: 4.3kΩ X10 or later: 5.6kΩ		X0 to X17: 4.3kΩ X20 or later: 5.6kΩ	
ON input sensitivity current		X0 to X7: 3.5mA or more X10 or later: 3.0mA or more		X0 to X17: 3.5mA or more X20 or later: 3.0mA or more	
Off input sensitivity current		1.5mA or less			
Input response frequency		X0, X1, X3, X4: 100kHz[*2] X2, X5, X6, X7: 10kHz		FX5U-32M□: • X0 to X5: 200kHz[*2] • X6 to X17: 10kHz FX5U-64M□, FX5U-80M□: • X0 to X7: 200kHz[*2] • X10 to X17: 10kHz • X20 or later: 0.1 ±0.05kHz	FX5UC-32M□: • X0 to X5: 200kHz[*2] • X6 to X17: 10kHz FX5UC-64M□, FX5UC-96M□: • X0 to X7: 200kHz[*2] • X10 to X17: 10kHz • X20 or later: 0.1 ±0.05kHz
Pulse waveform	Waveform	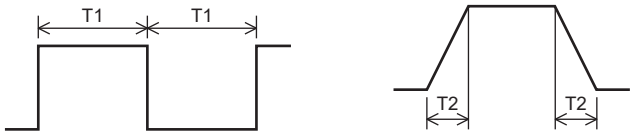			
	T1 (pulse width)	X0, X1, X3, X4: 5μs or more X2, X5, X6, X7: 50μs or more		FX5U-32M□: • X0 to X5: 2.5μs or more • X6 to X17: 50μs or more FX5U-64M□, FX5U-80M□: • X0 to X7: 2.5μs or more • X10 to X17: 50μs or more	FX5UC-32M□: • X0 to X5: 2.5μs or more • X6 to X17: 50μs or more FX5UC-64M□, FX5UC-96M□: • X0 to X7: 2.5μs or more • X10 to X17: 50μs or more
	T2 (rise/fall time)	X0, X1, X3, X4: 2.5μs or less X2, X5, X6, X7: 25μs or less		FX5U-32M□: • X0 to X5: 1.25μs or less • X6 to X17: 25μs or less FX5U-64M□, FX5U-80M□: • X0 to X7: 1.25μs or less • X10 to X17: 25μs or less	FX5UC-32M□: • X0 to X5: 1.25μs or less • X10 to X17: 25μs or less FX5UC-64M□, FX5UC-96M□: • X0 to X7: 1.25μs or less • X10 to X17: 25μs or less

Item	Specifications			
	FX5S	FX5UJ	FX5U	FX5UC
Input response time (Delay time of the hardware filter)	• X0, X1, X3, X4 On: 5μs or less Off: 5μs or less • X2, X5, X6, X7 On: 30μs or less Off: 50μs or less • X10 to X17 On: 50μs or less Off: 150μs or less • X20 or later On: Approx. 10ms Off: Approx. 10ms		FX5U-32M□: • X0 to X5 On: 2.5μs or less Off: 2.5μs or less • X6 to X17 On: 30μs or less Off: 50μs or less FX5U-64M□, FX5U-80M□: • X0 to X7 On: 2.5μs or less Off: 2.5μs or less • X10 to X17 On: 30μs or less Off: 50μs or less • X20 or later On: 50μs or less Off: 150μs or less	FX5UC-32M□: • X0 to X5 On: 2.5μs or less Off: 2.5μs or less • X6 to X17 On: 30μs or less Off: 50μs or less FX5UC-64M□, FX5UC-96M□: • X0 to X7 On: 2.5μs or less Off: 2.5μs or less • X10 to X17 On: 30μs or less Off: 50μs or less • X20 or later On: 50μs or less Off: 150μs or less
Input response time*3 (Digital filter setting value)	None, 10μs, 50μs, 0.1ms, 0.2ms, 0.4ms, 0.6ms, 1ms, 5ms, 10ms (default), 20ms, 70ms		None, 10μs, 50μs, 0.1ms, 0.2ms, 0.4ms, 0.6ms, 1ms, 5ms, 10ms (default), 20ms, 70ms	
Input signal format (Input sensor form)	No-voltage contact input Sink: NPN open collector transistor Source: PNP open collector transistor			
Indication of input operation	LED turns on when input is on.			LED turns on when input is on.*4

*1 Area-specific model

*2 When capturing pulses of a response frequency of 50 to 100kHz for FX5S/FX5UJ CPU modules or 50 to 200kHz for FX5U/FX5UC CPU modules, refer to ☞ Page 197 When capturing high-speed pulses.

*3 When using this product in an environment with much noise, set the digital filter.

*4 For a connector type module, keep the DISP switch on the IN side.

• FX5S CPU module, FX5UJ CPU module, and FX5U CPU module circuit configuration

Item		Circuit configuration diagram	
		Sink input wiring	Source input wiring
AC power supply	When using 24VDC service power supply	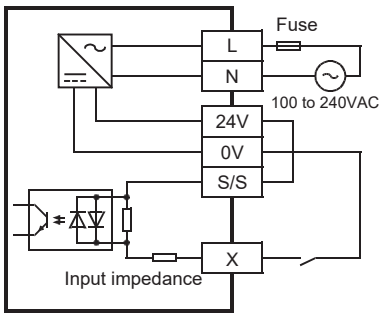	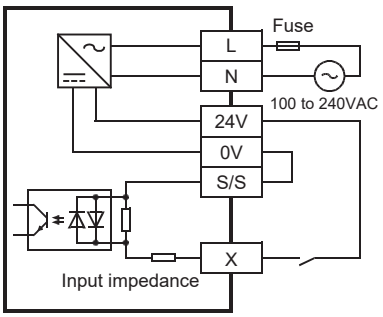
	When using external power supply	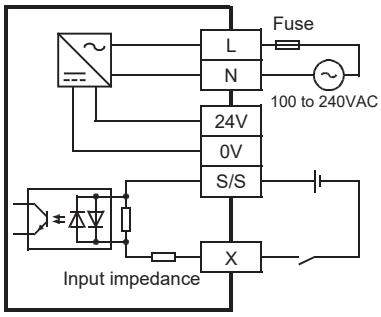	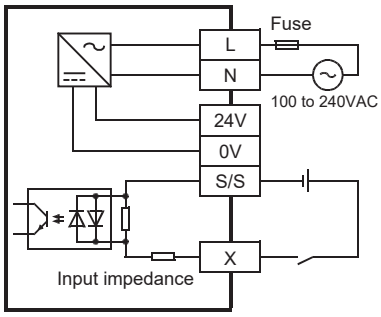

• FX5S CPU module, FX5UJ CPU module, and FX5U CPU module circuit configuration

Item	Circuit configuration diagram	
	Sink input wiring	Source input wiring
DC power supply	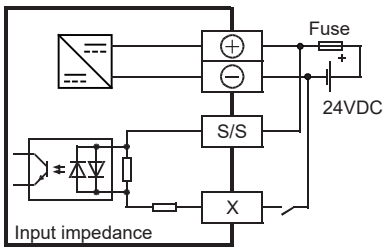	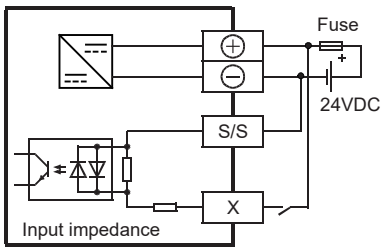

• FX5UC CPU module circuit configuration

Item	Circuit configuration diagram	
	Sink input wiring	Source input wiring
FX5UC-□MT/D	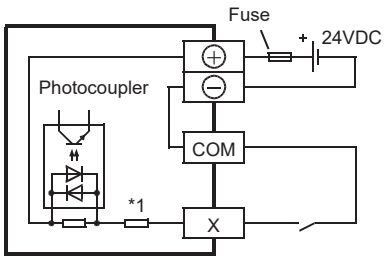 *1 Input impedance	—
FX5UC-□M□/DS□	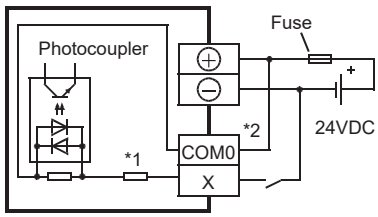 *1 Input impedance *2 For the spring clamp terminal block type, the [COM0] terminal is the [S/S] terminal.	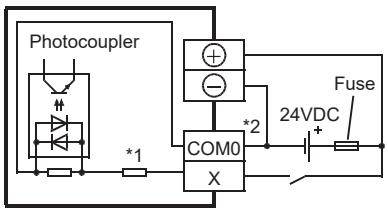 *1 Input impedance *2 For the spring clamp terminal block type, the [COM0] terminal is the [S/S] terminal.

5.4 Output Specifications

This sections describes the output specifications of the CPU module.

Relay output

Item		Output specifications			
		FX5S	FX5UJ	FX5U	FX5UC
Number of output points		FX5S-30MR□: 14 points FX5S-40MR□: 16 points FX5S-60MR□: 24 points FX5S-80MR□*1: 32 points	FX5UJ-24MR□: 10 points FX5UJ-40MR□: 16 points FX5UJ-60MR□: 24 points	FX5U-32MR□: 16 points FX5U-64MR□: 32 points FX5U-80MR□: 40 points	FX5UC-32MR/DS-TS: 16 points
Connection type		Non-removable terminal block (M3 screws)	Removable terminal block (M3 screws)		Spring clamp terminal block
Output type		Relay			
External power supply		30VDC or less 240VAC or less (250VAC or less when the module does not comply with CE, UL, or cUL standards)			
Max. load		2A/point The total load current per common terminal should be the following value. • 3 output points/common terminal: 6A or less • 4 output points/common terminal: 8A or less For details on the common, refer to ☞ Page 105 Power, input/output terminal block.		2A/point The total load current per common terminal should be the following value. • 4 output points/common terminal: 8A or less • 8 output points/common terminal: 8A or less For details on the common, refer to ☞ Page 105 Power, input/output terminal block.	2A/point The total load current per common terminal should be the following value. • 8 output points/common terminal: 4A or less*2 For details on the common, refer to ☞ Page 105 Power, input/output terminal block.
Min. load		5VDC, 2mA (reference values)			
Open circuit leakage current		—			
Response time	Off → On	Approx. 10ms			
	On → Off	Approx. 10ms			
Indication of output operation		LED turns on when output is on.			

*1 Area-specific model

*2 When two common terminals are connected outside the I/O module, resistance load is 8A or less.

• FX5S CPU module, FX5UJ CPU module, and FX5U CPU module circuit configuration

Item	Circuit configuration diagram
Relay output	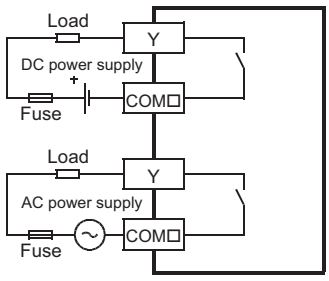 A common number is entered into □ of [COM□].

• FX5UC CPU module circuit configuration

Item	Circuit configuration diagram
Relay output	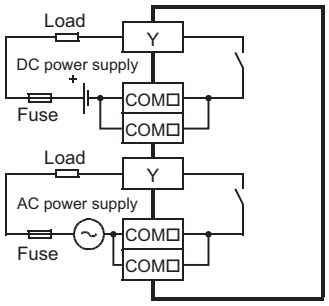 A common number is entered into □ of [COM□].

Transistor output

Item	Output specifications			
	FX5S	FX5UJ	FX5U	FX5UC
Number of output points	FX5S-30MT□: 14 points FX5S-40MT□: 16 points FX5S-60MT□: 24 points FX5S-80MT□*1: 32 points	FX5UJ-24MT□: 10 points FX5UJ-40MT□: 16 points FX5UJ-60MT□: 24 points	FX5U-32MT□: 16 points FX5U-64MT□: 32 points FX5U-80MT□: 40 points	FX5UC-32MT□: 16 points FX5UC-64MT□: 32 points FX5UC-96MT□: 48 points
Connection type	Non-removable terminal block (M3 screws)	Removable terminal block (M3 screws)		FX5UC-32M□: • Connector • Spring clamp terminal block FX5UC-64M□, FX5UC-96M□: • Connector
Output type	• Transistor (sink) • Transistor (source)			
External power supply	5-30VDC			
Max. load	0.5A/point The total load current per common terminal should be the following value. • 3 output points/common terminal: 0.6A or less • 4 output points/common terminal: 0.8A or less For details on the common, refer to ☞ Page 105 Power, input/output terminal block.		0.5A/point The total load current per common terminal should be the following value. • 4 output points/common terminal: 0.8A or less • 8 output points/common terminal: 1.6A or less For details on the common, refer to ☞ Page 105 Power, input/output terminal block.	Y0 to Y3: 0.3A/point Y4 or later: 0.1A/point The total load current per common terminal should be the following value. • 8 output points/common terminal: 0.8A or less*2 For details on the common, refer to ☞ Page 105 Power, input/output terminal block.
Open circuit leakage current	0.1mA or less/30VDC			
Voltage drop when ON	Y0 to Y3: 1.0V or less Y4 or later: 1.5V or less	Y0 to Y2: 1.0V or less Y3 or later: 1.5V or less	Y0 to Y3: 1.0V or less Y4 or later: 1.5V or less	
Response time	Y0 to Y3: 5μs or less/10mA or more (5-24VDC) Y4 or later: 0.2ms or less/ 200mA or more (24VDC)	Y0 to Y2: 2.5μs or less/ 10mA or more (5-24VDC) Y3 or later: 0.2ms or less/ 200mA or more (24VDC)	Y0 to Y3: 2.5μs or less/10mA or more (5-24VDC) Y4 or later: 0.2ms or less/ 200mA or more (24VDC)	Y4 or later: 0.2ms or less/ 100mA (24VDC)
Indication of output operation	LED turns on when output is on.			LED turns on when output is on.*3

*1 Area-specific model

*2 When two common terminals are connected outside the I/O module, resistance load is 1.6A or less.

*3 For a connector type module, keep the DISP switch on the IN side.

• FX5S CPU module, FX5UJ CPU module, and FX5U CPU module circuit configuration

Item	Circuit configuration diagram	
	Sink output wiring	Source output wiring
Transistor output	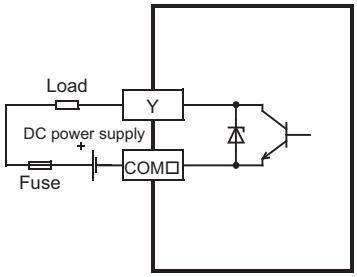 A common number is entered into ☐ of [COM☐].	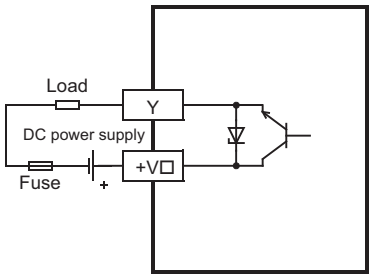 A common number is entered into ☐ of [+V☐].

• FX5UC CPU module circuit configuration

Item	Circuit configuration diagram	
	Sink output wiring	Source output wiring
Transistor output	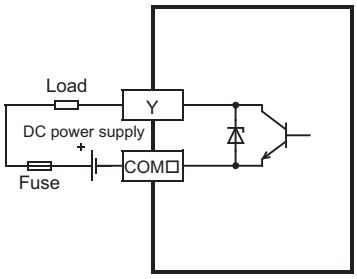 A common number is entered into ☐ of [COM☐].	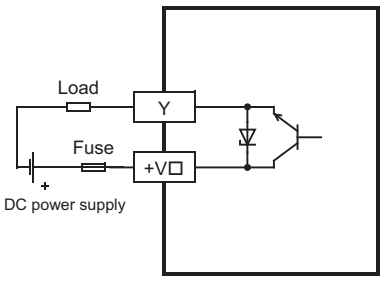 A common number is entered into ☐ of [+V☐].

5.5 Input/Output Derating Curve

The derating curve below shows the simultaneous ON ratio of available programmable controller inputs or outputs with respect to the ambient temperature. Use the programmable controller within the simultaneous input or output ON ratio range shown in the figure.
The simultaneous ON ratio refers to the proportion of the inputs and outputs in each module that can be turned on at the same time.

Ex.
When the FX5S-30MR/DS is used with the simultaneous ON ratio 65%, up to 10 input points (which is 65% or less of the total 16 input points) and up to 9 output points (which is 65% or less of the total 14 output points) can be simultaneously turned on.

FX5S CPU module

For the FX5S CPU module, derating is available for relay output type only.

- AC power supply type derating chart

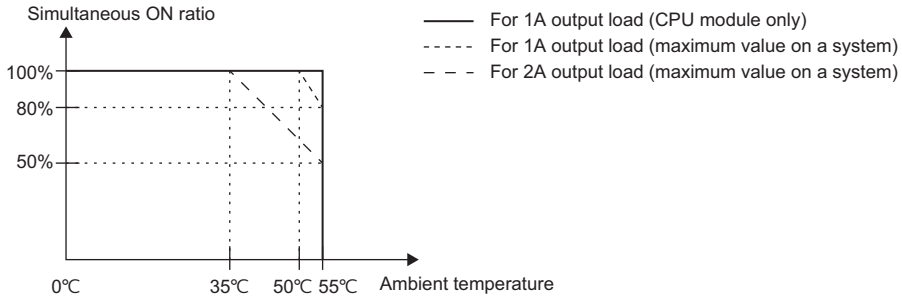

- DC power supply type derating chart

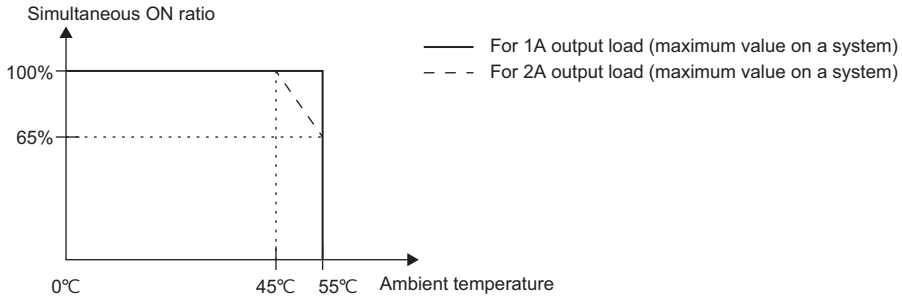

FX5UJ CPU module

- AC power supply type derating chart

When using 24VDC service power supply and external power supply (24VDC) for the input circuit power supply

■FX5UJ-□MR/ES

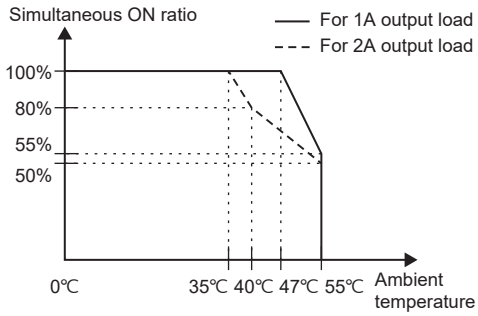

■FX5UJ-□MT/□

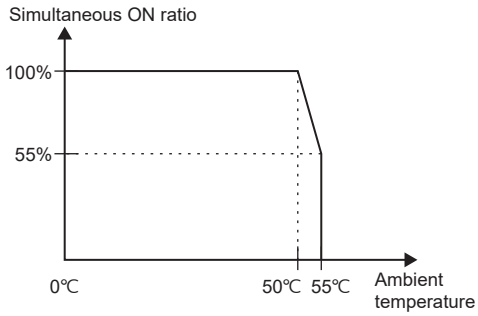

- DC power supply type derating chart

■FX5UJ-□MR/DS*1

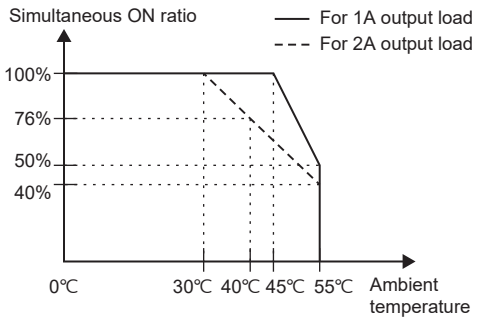

■FX5UJ-□MT/□

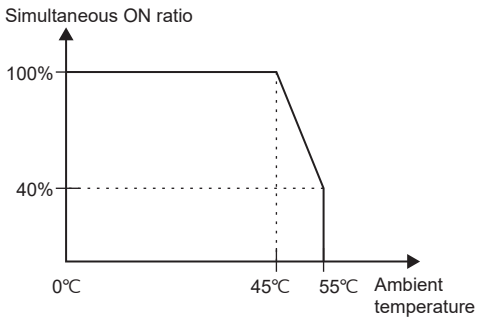

*1 To adapt UL and cUL standards, the simultaneous ON ratio must be 76% or less for 2A output load.

FX5U CPU module

- AC power supply type derating chart
  When using 24VDC service power supply and external power supply (24VDC) for the input circuit power supply

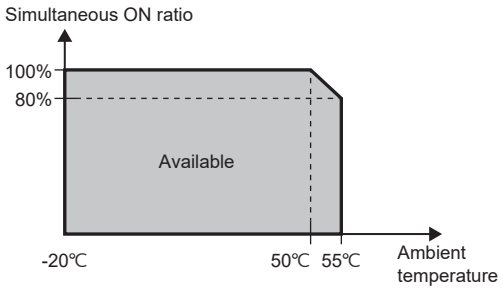

- DC power supply type derating chart
  When using external power supply (24VDC) for the input circuit power supply

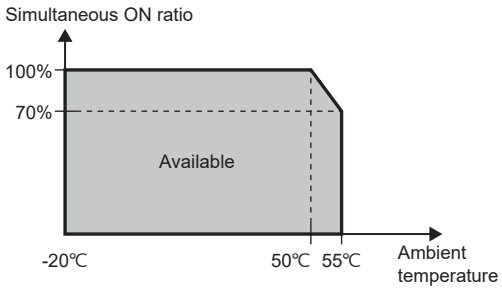

FX5UC CPU module

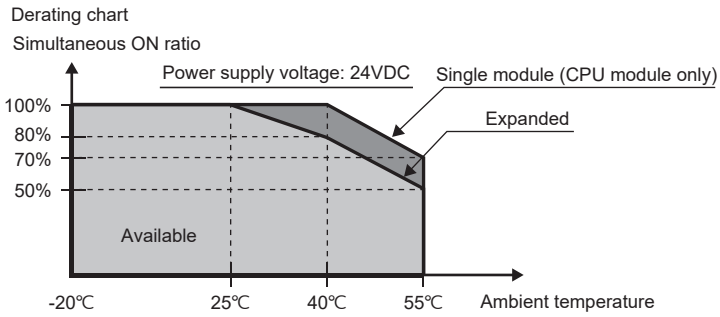

5.6 Built-in Analog Specifications

Refer to the following.

MELSEC iQ-F FX5 User's Manual (Application)

5.7 Positioning Specifications

Refer to the following.

MELSEC iQ-F FX5 User's Manual (Application)

5.8 Communication Specifications

Built-in Ethernet communication

The following describes the communication specifications of the built-in Ethernet port of the CPU module.

Item			Specification
Transmission specifications	Data transfer speed		100/10 Mbps
	Communication mode		Full-duplex or half-duplex[*1]
	Interface		RJ45 connector
	Transmission method		Base band
	Maximum segment length		100m (length between hub and node)[*2]
	Number of cascade connections	100BASE-TX	2 levels maximum[*3]
		10BASE-T	4 levels maximum[*3]
Protocol type			CC-Link IE Field Network Basic, MELSOFT connection, SLMP server (3E/1E frame), Socket communication, Predefined protocol support, FTP Server, FTP Client, MODBUS/TCP communication, SNTP client, Web server (HTTP), Simple CPU communication function
Number of connections			Total of 8 connections[*4*5] (Up to 8 external devices can access one CPU module at the same time.)
Hub[*1]			Hubs with 100BASE-TX or 10BASE-T ports[*6] can be used.
Insulation method			Pulse transformer
IP address[*7]			Initial value: 192.168.3.250
Connection cable[*8]	100BASE-TX		Ethernet cable of category 5 or higher (STP cable)
	10BASE-T		Ethernet cable of category 3 or higher (STP cable)

*1 IEEE802.3x flow control is not supported.
*2 For maximum segment length (length between hubs), consult the manufacturer of the hub used.
*3 This number applies when a repeater hub is used. When using a switching hub, check the number of cascaded stages with the manufacturer of the hub to be used.
*4 The first device for MELSOFT connection is not included in the number of connections. (The second and the following devices are included.)
*5 The CC-Link IE Field Network Basic, FTP server, FTP client, SNTP client, Web server and simple CPU communication function are not included in the number of connections.
*6 The ports must comply with the IEEE802.3 100BASE-TX or IEEE802.3 10BASE-T standards.
*7 If the first octet is 0 or 127, a parameter error (2222H) will occur. (Example: 0.0.0.0, 127.0.0.0, etc.)
*8 A straight cable can be used. When a device such as a GOT and CPU module is directly connected using the Ethernet cable, a cross cable of category 5e or lower can be used as well.

Point

- When connected to a hub, the CPU module determines the cable used (100BASE-TX or 10BASE-T) and the communication mode (full-duplex or half-duplex) according to the hub. Set the hub into the half-duplex mode if the hub that does not have the auto-negotiation function.
- If broadcast storm occurs in the network, scan time may be increased.
- If the destination device of the CPU module does not respond due to power off or other reasons, Ethernet communication of the CPU module may get delayed by up to 500 ms.

Precautions

The operation of the following connections is not guaranteed. Check the operation before using the module.

- Connection using the Internet (general public line) (Internet-access service offered by an Internet service provider or a telecommunications carrier)
- Connection using firewall device(s)
- Connection using broadband router(s)
- Connection using wireless LAN

Built-in RS-485 communication

The following describes the communication specifications of the built-in RS-485 port of the CPU module.

Item	Specifications
Transmission standards	Conforms to RS-485/RS-422 specifications
Data transmission speed	Max. 115.2 kbps
Communication method	Full-duplex (FDX) / Half-duplex (HDX)
Maximum total extension distance	50 m
Protocol type	MELSOFT connection, Non-protocol communication, MELSEC communication protocol (1C/3C/4C frames), MODBUS RTU, Predefined protocol support, Inverter communication, N:N network, Parallel link
Insulation method	Not insulated
Terminal resistors	Built-in (OPEN/110 Ω/330 Ω)
Terminal block used	European-type terminal block

5.9 Terminal Layout

Built-in analog terminal

European-type terminal block

European-type terminal block	Signal name		Function	
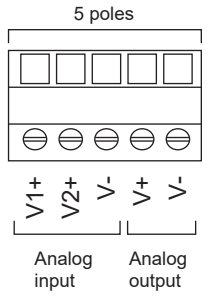	Analog input	V1+	CH1	Voltage input (+)
		V2+	CH2	Voltage input (+)
		V-	CH1/CH2	Voltage input (-)
	Analog output	V+	CH1	Voltage output (+)
		V-	CH1	Voltage output (-)

Built-in Ethernet connector

Connector	Pin	Signal name
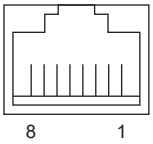	1	TXD+
	2	TXD-
	3	RXD+
	4	Not used
	5	Not used
	6	RXD-
	7	Not used
	8	Not used

Built-in RS-485 terminal

European-type terminal block

- FX5U CPU module

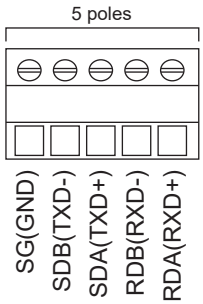

- FX5UC CPU module

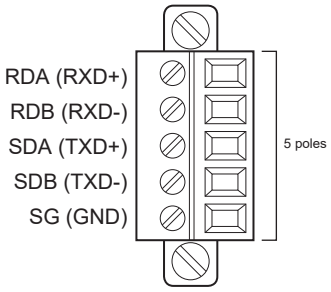

Power, input/output terminal block

- Interpretation of terminal block layout (Screw terminal block)

Ex.

FX5U CPU module

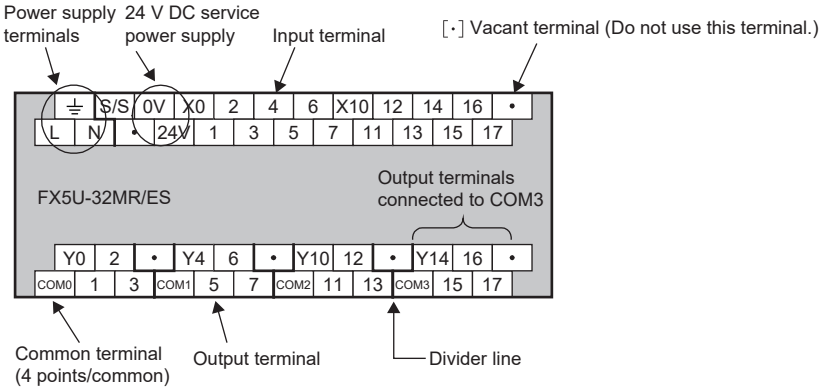

Item	Description
Indication of power supply terminals	The AC power supply has [L] and [N] terminals. The DC power supply has [+] and [-] terminals. For external wiring, refer to☞ Page 188 Power Supply Wiring.
Indication of 24VDC service power supply	The 24VDC service power supply has [0V] and [24V] terminals. Between [0V] and [0V] terminals and between [24V] and [24V] terminals of the FX5U-64M□ and FX5U-80M□ (AC power supply), the terminals are connected internally, and an external short-circuit is not required. The DC power supply type does not have a 24VDC service power supply. [·] indicates vacant terminals. Do not wire [·] terminals.
Indication of input terminal	Both AC and DC power supply types have the same input terminals; however, the external input wiring differs from each other. One common terminal covers 3 or 4 output points. For external wiring, refer to☞ Page 191 Input Wiring.
Indication of output terminals connected to common (COM□)	Output points covered by one common terminal are as follows. • FX5S CPU module, FX5UJ CPU module: 3 or 4 points • FX5U CPU module: 4 or 8 points The output numbers (Y) inside the thick "divider lines" are connected to common. For transistor output (source) type, the "COM□" terminal is the "+V□" terminal.

AC power supply

• FX5S CPU module

Model	Terminal layout
FX5S-30MR/ES FX5S-30MT/ES	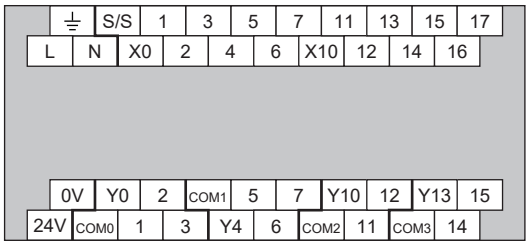
FX5S-30MT/ESS	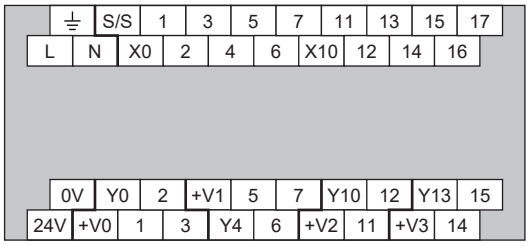
FX5S-40MR/ES FX5S-40MT/ES	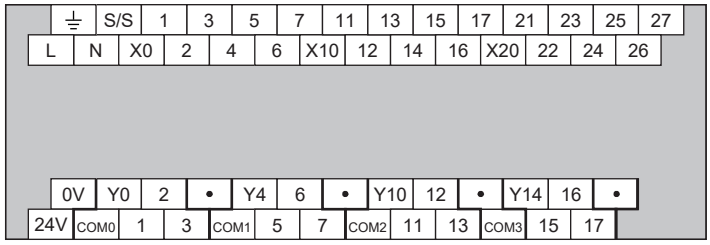
FX5S-40MT/ESS	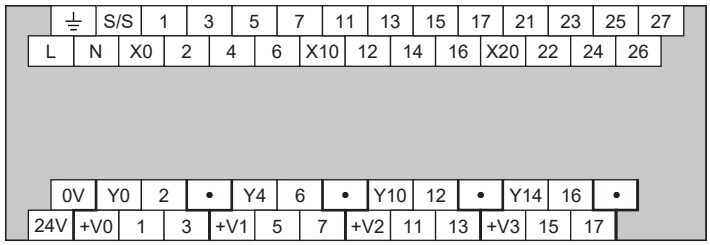
FX5S-60MR/ES FX5S-60MT/ES	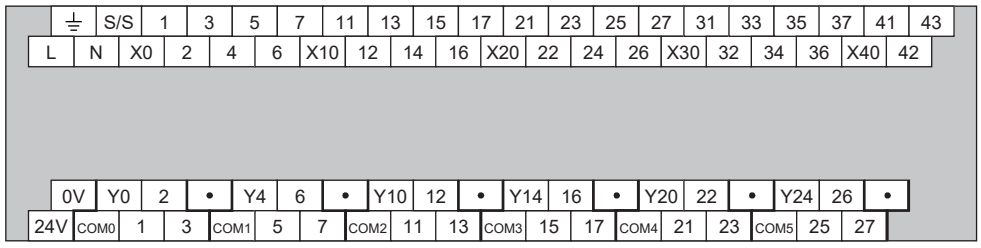
FX5S-60MT/ESS	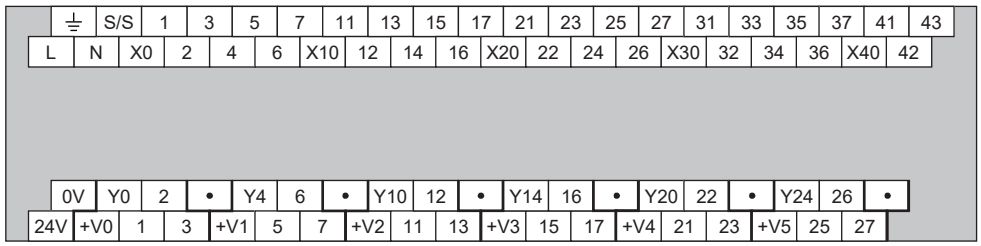

Model	Terminal layout
FX5S-80MR/ES*1 FX5S-80MT/ES*1	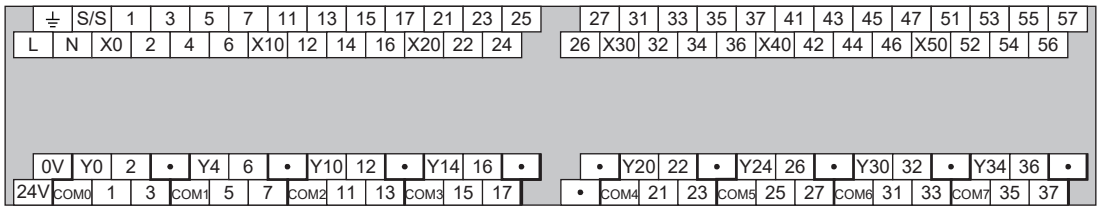
FX5S-80MT/ESS*1	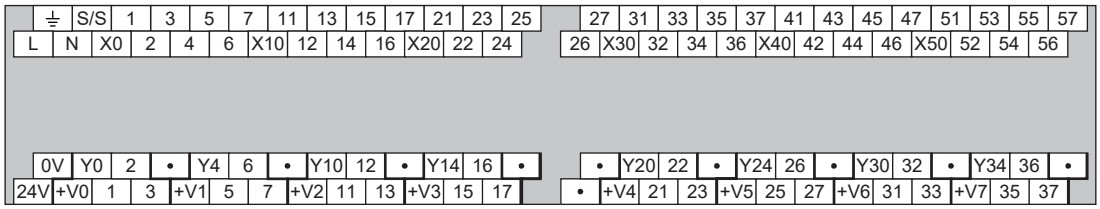

*1 Area-specific model

• FX5UJ CPU module

Model	Terminal layout
FX5UJ-24MR/ES FX5UJ-24MT/ES	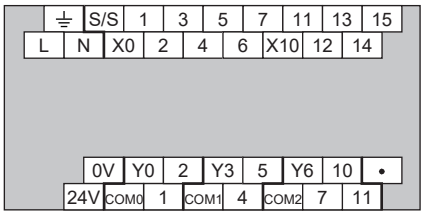
FX5UJ-24MT/ESS	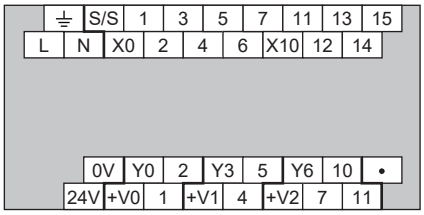
FX5UJ-40MR/ES FX5UJ-40MT/ES	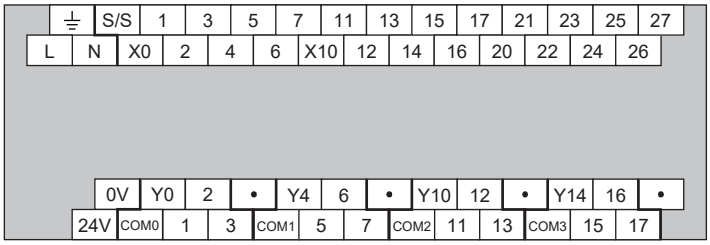
FX5UJ-40MT/ESS	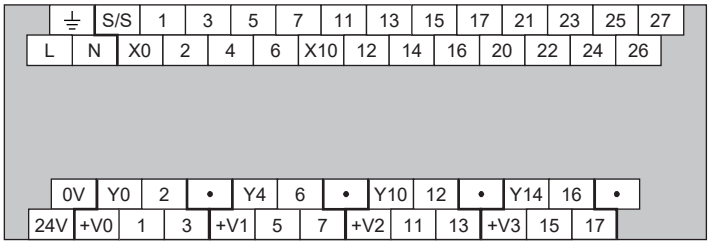
FX5UJ-60MR/ES FX5UJ-60MT/ES	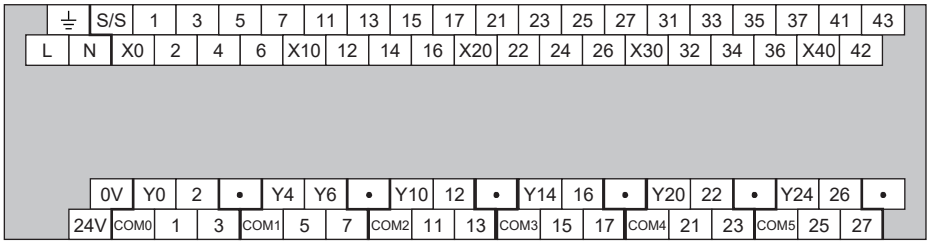
FX5UJ-60MT/ESS	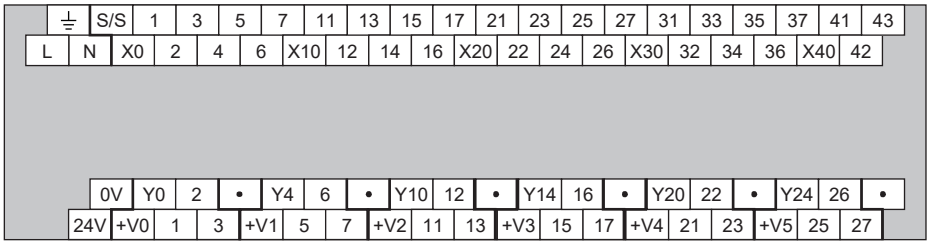

• FX5U CPU module

Model	Terminal layout
FX5U-32MR/ES FX5U-32MT/ES	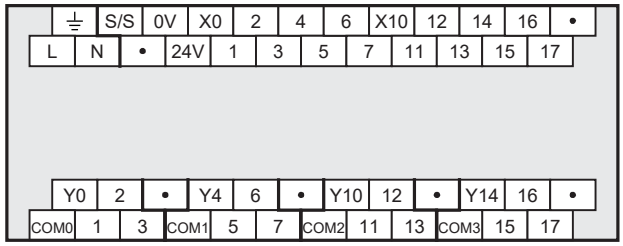
FX5U-32MT/ESS	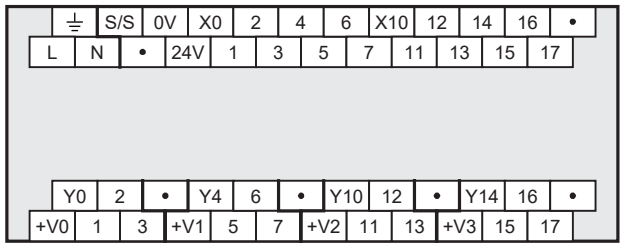
FX5U-64MR/ES FX5U-64MT/ES	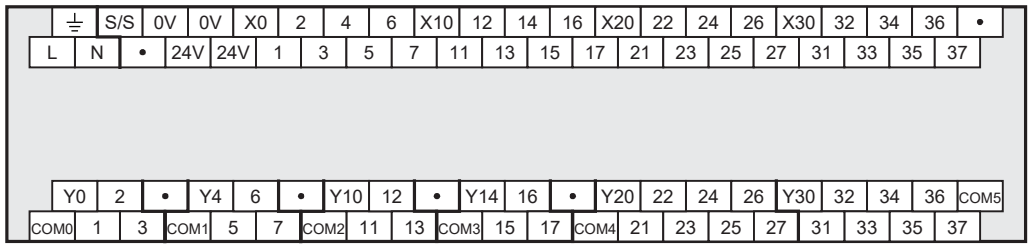
FX5U-64MT/ESS	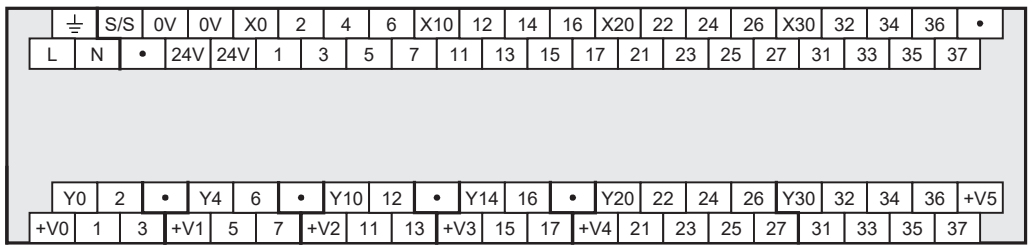
FX5U-80MR/ES FX5U-80MT/ES	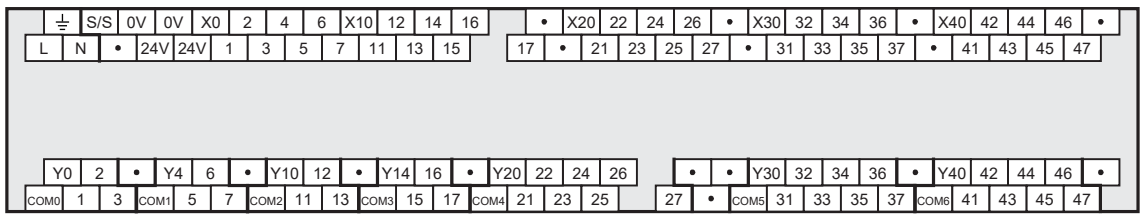
FX5U-80MT/ESS	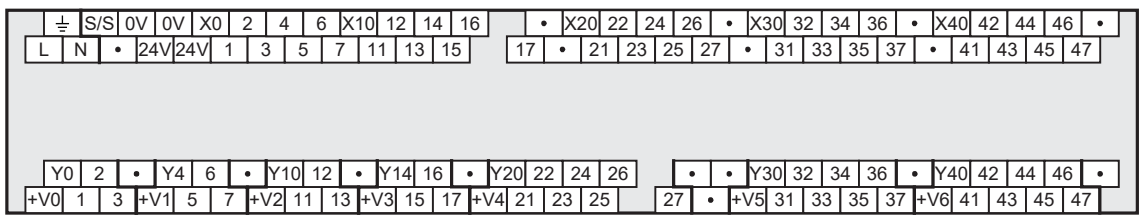

DC power supply

• FX5S CPU module

Model	Terminal layout
FX5S-30MR/DS FX5S-30MT/DS	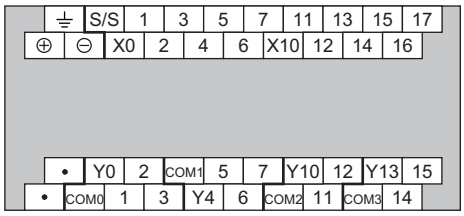
FX5S-30MT/DSS	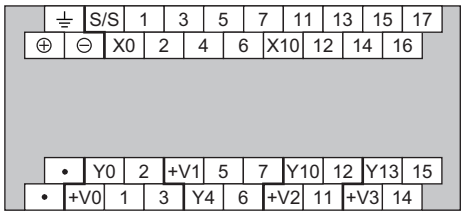
FX5S-40MR/DS FX5S-40MT/DS	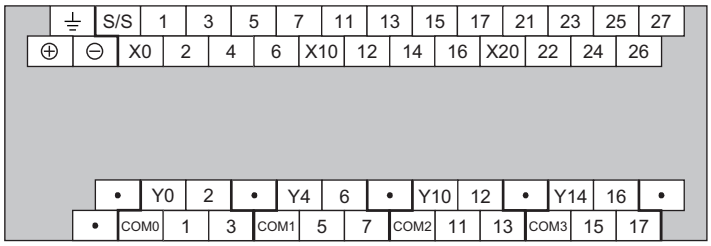
FX5S-40MT/DSS	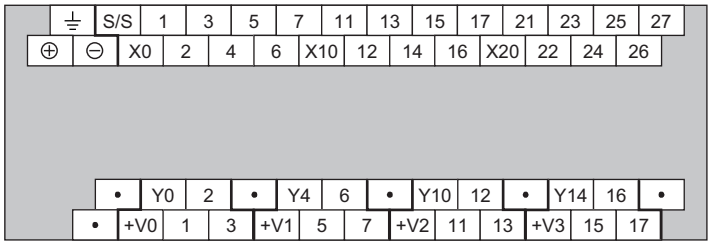
FX5S-60MR/DS FX5S-60MT/DS	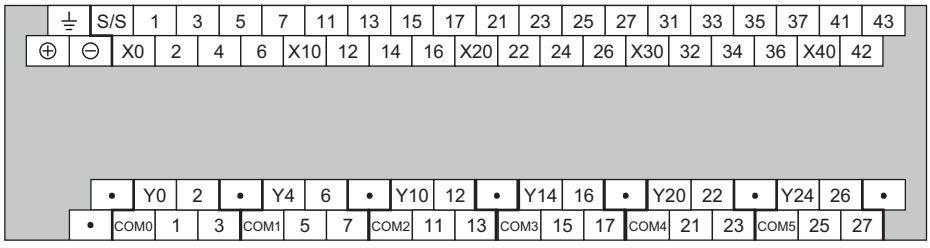
FX5S-60MT/DSS	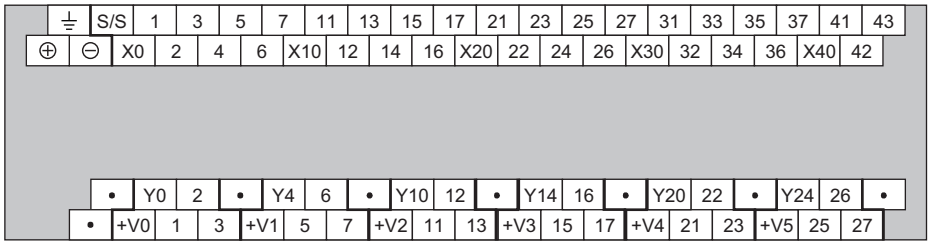

Model	Terminal layout
FX5S-80MR/DS[*1] FX5S-80MT/DS[*1]	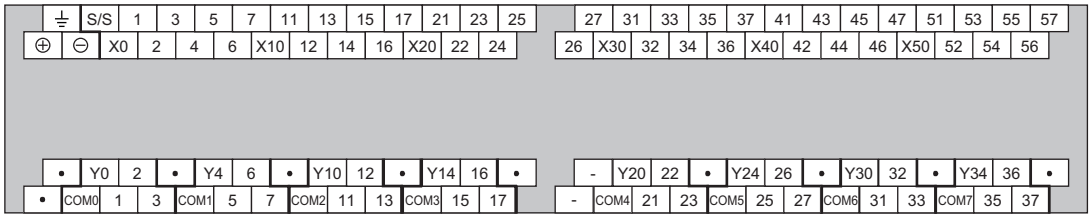
FX5S-80MT/DSS[*1]	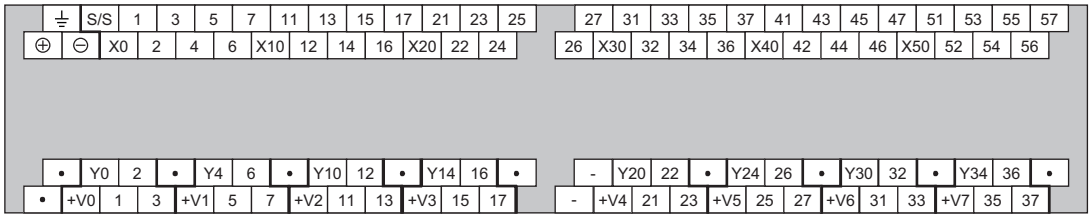

*1 Area-specific model

• FX5UJ CPU module

Model	Terminal layout
FX5UJ-24MR/DS FX5UJ-24MT/DS	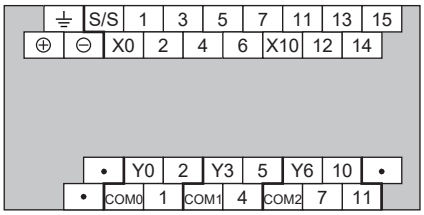
FX5UJ-24MT/DSS	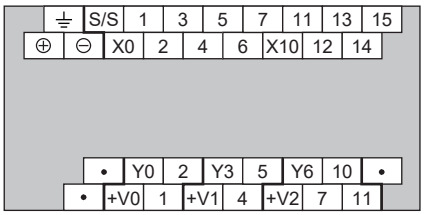
FX5UJ-40MR/DS FX5UJ-40MT/DS	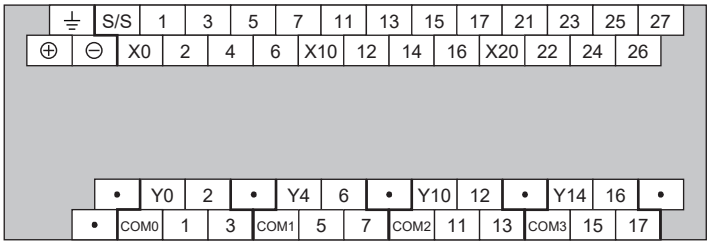
FX5UJ-40MT/DSS	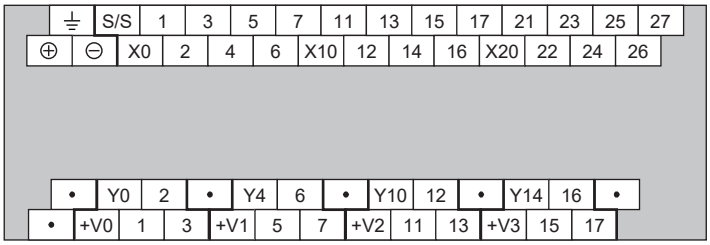
FX5UJ-60MR/DS FX5UJ-60MT/DS	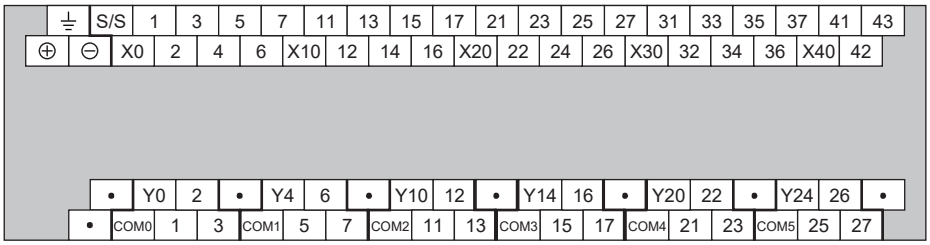
FX5UJ-60MT/DSS	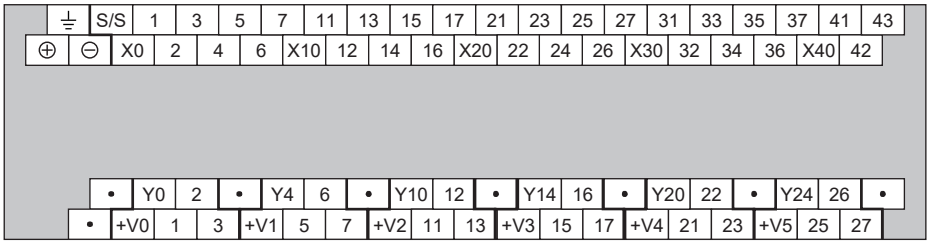

• FX5U CPU module

Model	Terminal layout
FX5U-32MR/DS FX5U-32MT/DS	
FX5U-32MT/DSS	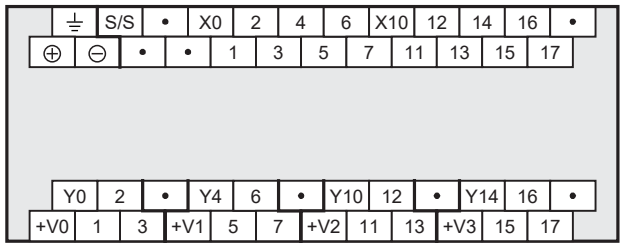
FX5U-64MR/DS FX5U-64MT/DS	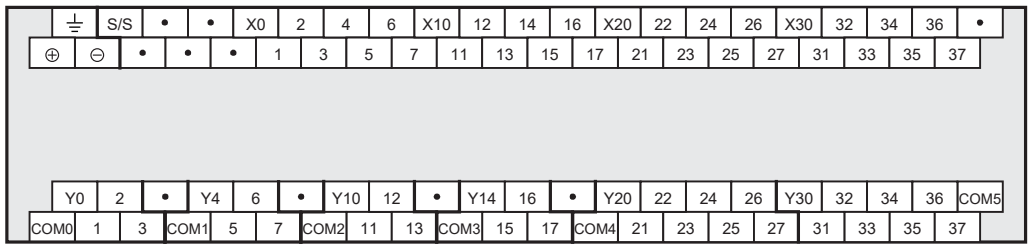
FX5U-64MT/DSS	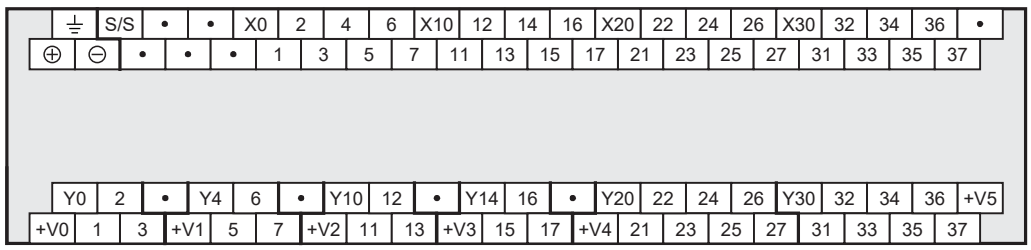
FX5U-80MR/DS FX5U-80MT/DS	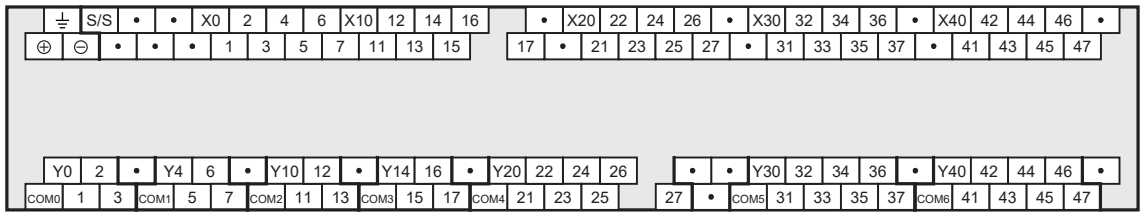
FX5U-80MT/DSS	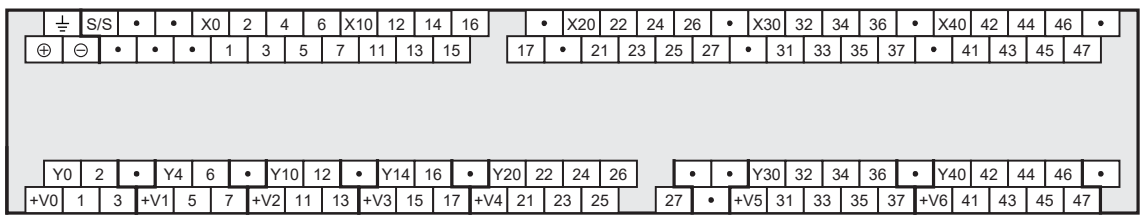

■I/O connector

: Indicates that the terminals are connected to each other in the programmable controller.

In addition, ❶ indicates that the terminals are all connected to each other in the programmable controller.

- FX5UC CPU module

FX5UC-32MT/D

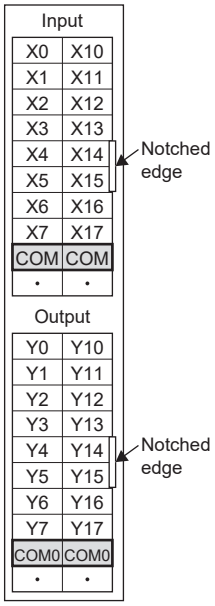

FX5UC-32MT/DSS

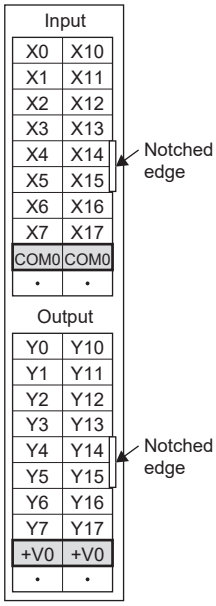

FX5UC-64MT/D

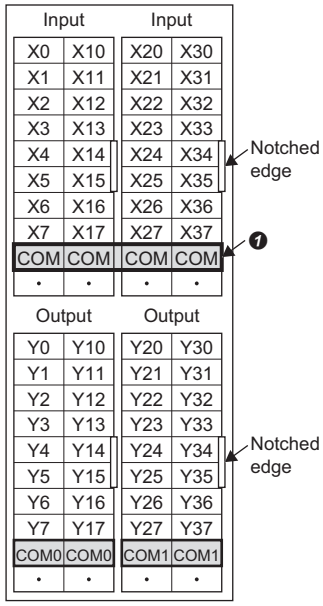

FX5UC-64MT/DSS

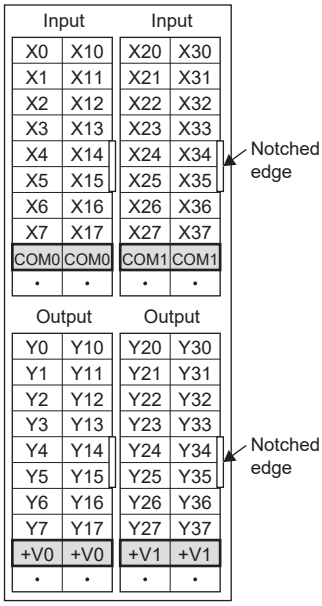

FX5UC-96MT/D

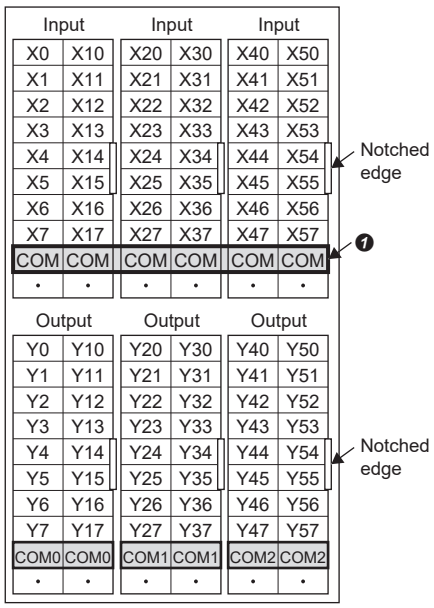

FX5UC-96MT/DSS

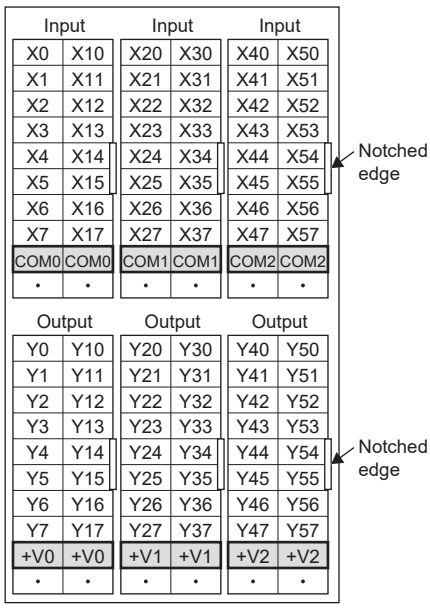

■I/O terminal block

: Indicates that the terminals are connected to each other in the programmable controller.

• FX5UC CPU module

FX5UC-32MT/DS-TS

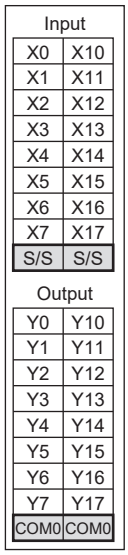

FX5UC-32MT/DSS-TS

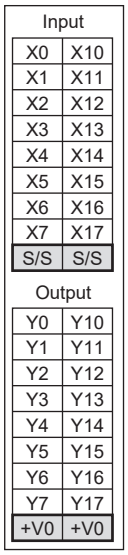

FX5UC-32MR/DS-TS

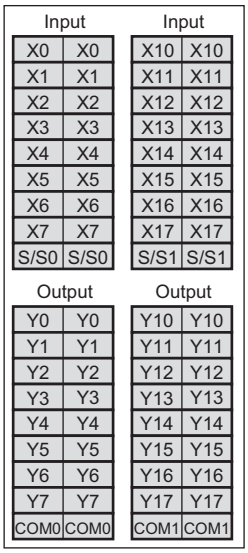

■Power supply connector

• FX5UC CPU module

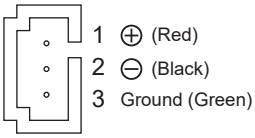

5.10 External Dimensions

FX5S CPU module

■FX5S-30M□, FX5S-40M□, FX5S-60M□

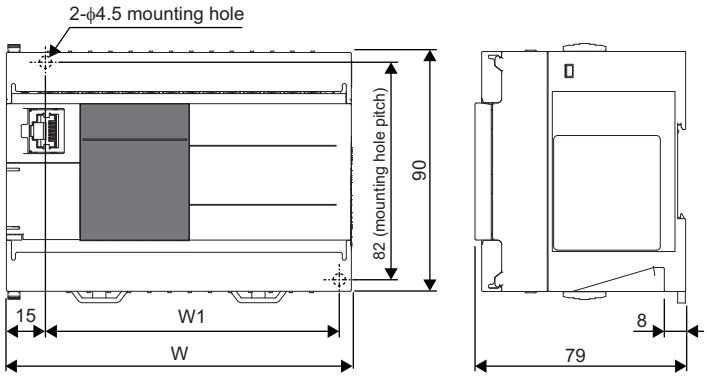

(Unit: mm)

Model	W	W1 (mounting hole pitch)	Mass (weight)
FX5S-30MR/ES FX5S-30MT/ES FX5S-30MT/ESS FX5S-30MR/DS FX5S-30MT/DS FX5S-30MT/DSS	100mm	81mm	Approx. 0.45kg
FX5S-40MR/ES FX5S-40MT/ES FX5S-40MT/ESS FX5S-40MR/DS FX5S-40MT/DS FX5S-40MT/DSS	130mm	111mm	Approx. 0.55kg
FX5S-60MR/ES FX5S-60MT/ES FX5S-60MT/ESS FX5S-60MR/DS FX5S-60MT/DS FX5S-60MT/DSS	175mm	156mm	Approx. 0.65kg

■FX5S-80M□

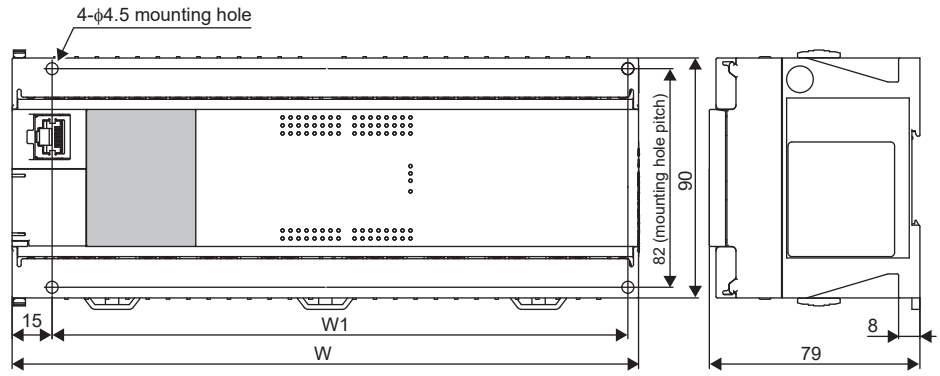

(Unit: mm)

Model	W	W1 (mounting hole pitch)	Mass (weight)
FX5S-80MR/ES*1 FX5S-80MT/ES*1 FX5S-80MT/ESS*1 FX5S-80MR/DS*1 FX5S-80MT/DS*1 FX5S-80MT/DSS*1	235mm	216mm	Approx. 0.8kg

*1 Area-specific model

■With an expansion board installed

For FX5-SDCD

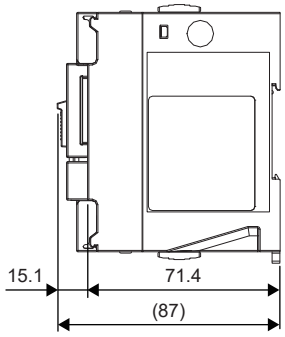

(Unit: mm)

For FX5-SDCD and FX5-485-BD

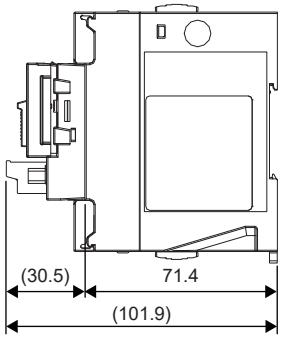

(Unit: mm)

FX5UJ CPU module

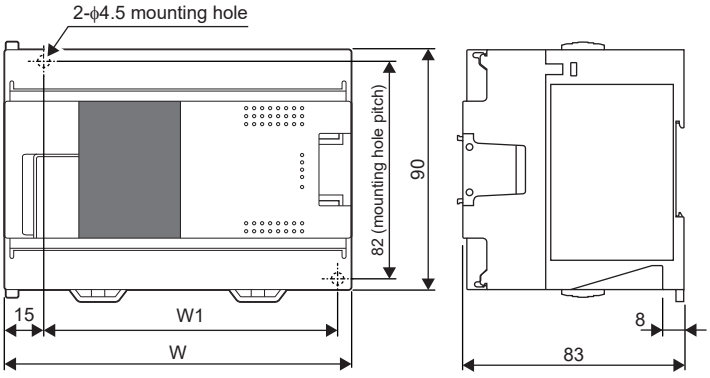

(Unit: mm)

Model	W	W1 (mounting hole pitch)	Mass (weight)
FX5UJ-24MR/ES FX5UJ-24MT/ES FX5UJ-24MT/ESS FX5UJ-24MR/DS FX5UJ-24MT/DS FX5UJ-24MT/DSS	95mm	76mm	Approx. 0.55kg
FX5UJ-40MR/ES FX5UJ-40MT/ES FX5UJ-40MT/ESS FX5UJ-40MR/DS FX5UJ-40MT/DS FX5UJ-40MT/DSS	130mm	111mm	Approx. 0.65kg
FX5UJ-60MR/ES FX5UJ-60MT/ES FX5UJ-60MT/ESS FX5UJ-60MR/DS FX5UJ-60MT/DS FX5UJ-60MT/DSS	175mm	156mm	Approx. 0.80kg

■With an expansion board installed

For FX5-485-BD

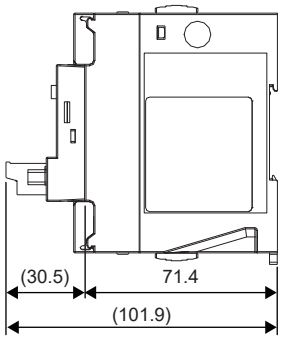

(Unit: mm)

FX5U CPU module

■FX5U-32M□

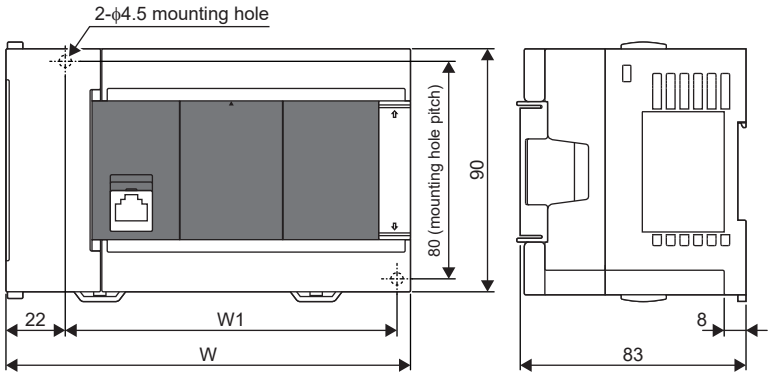

(Unit: mm)

Model	W	W1 (mounting hole pitch)	Mass (weight)
FX5U-32MR/ES FX5U-32MT/ES FX5U-32MT/ESS FX5U-32MR/DS FX5U-32MT/DS FX5U-32MT/DSS	150mm	123mm	Approx. 0.7kg

■FX5U-64M□, FX5U-80M□

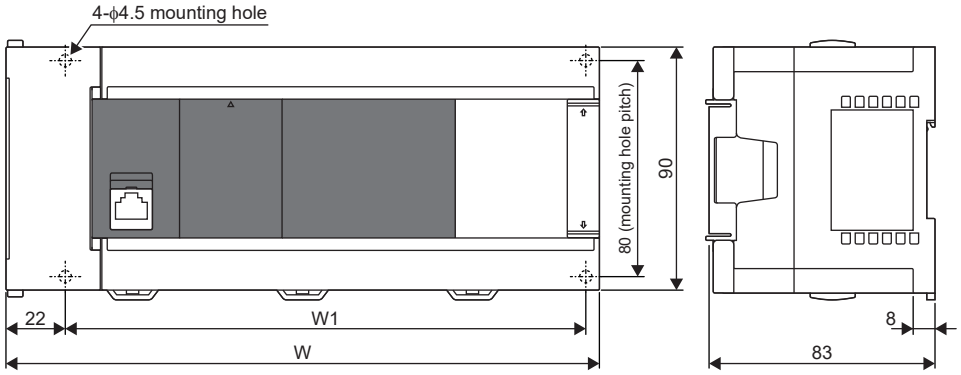

(Unit: mm)

Model	W	W1 (mounting hole pitch)	Mass (weight)
FX5U-64MR/ES FX5U-64MT/ES FX5U-64MT/ESS FX5U-64MR/DS FX5U-64MT/DS FX5U-64MT/DSS	220mm	193mm	Approx. 1.0kg
FX5U-80MR/ES FX5U-80MT/ES FX5U-80MT/ESS FX5U-80MR/DS FX5U-80MT/DS FX5U-80MT/DSS	285mm	258mm	Approx. 1.2kg

■With an expansion board installed

For FX5-485-BD

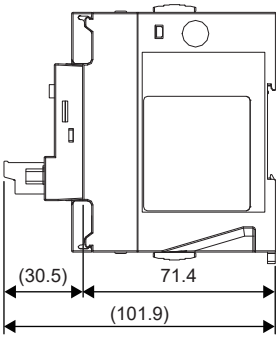

(Unit: mm)

FX5UC CPU module

■Connector type

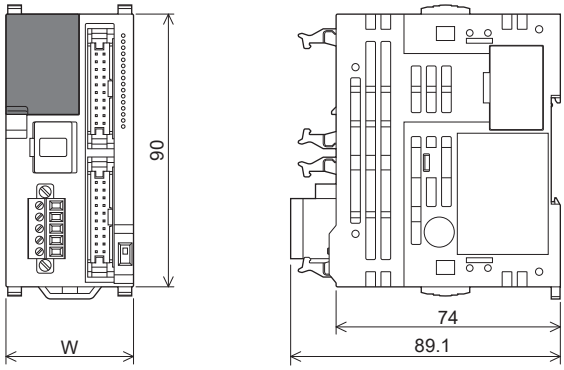

(Unit: mm)

Model	W	Mass (weight)
FX5UC-32MT/D FX5UC-32MT/DSS	42.1mm	Approx. 0.2kg
FX5UC-64MT/D FX5UC-64MT/DSS	62.2mm	Approx. 0.3kg
FX5UC-96MT/D FX5UC-96MT/DSS	82.3mm	Approx. 0.35kg

■Spring clamp terminal block type

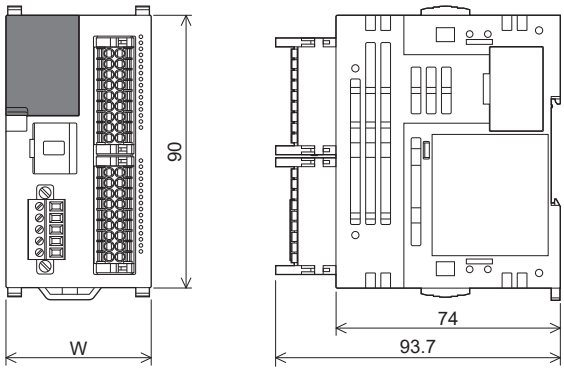

(Unit: mm)

Model	W	Mass (weight)
FX5UC-32MT/DS-TS FX5UC-32MT/DSS-TS	48.1mm	Approx. 0.25kg
FX5UC-32MR/DS-TS	68.2mm	Approx. 0.35kg

6 I/O MODULE PERFORMANCE SPECIFICATIONS

This chapter describes the performance specifications of the I/O module.

There is the simultaneous ON ratio of available programmable controller inputs or outputs with respect to the ambient temperature. For details, refer to the following.*1

☞ Page 99 Input/Output Derating Curve

*1 For extension cable type I/O modules, refer to the derating for the connected CPU module. In addition, for extension connector type I/O modules, regardless of the connected CPU module, refer to the derating for the FX5UC CPU module.

6.1 Input Module

Extension cable type

Item		Specifications	
		FX5-8EX/ES	FX5-16EX/ES
Current consumption	5VDC	75mA	100mA
	24VDC	50mA (0mA*1)	85mA (0mA*1)
Mass (weight)		Approx. 0.2kg	Approx. 0.25kg
External color		Munsell 0.6B7.6/0.2	
■Input specifications			
Number of input points		8 points	16 points
Connection type		Screw terminal block (M3 screws)	
Input type		Sink/source	
Input signal voltage		24VDC +20%, -15%	
Input signal current		4.0mA/24VDC	
Input impedance		5.6kΩ	
Input sensitivity current	On	3.0mA or more	
	Off	1.5mA or less	
Input response time	On	50μs or less	
	Off	150μs or less	
Input signal format (Input sensor form)		No-voltage contact input Sink: NPN open collector transistor Source: PNP open collector transistor	
Indication of input operation		LED turns on when input is on.	

*1 Current consumption when external power supply is used for the input circuit.

• Circuit configuration

Item	Circuit configuration diagram	
	Sink input wiring	Source input wiring
When using external power supply	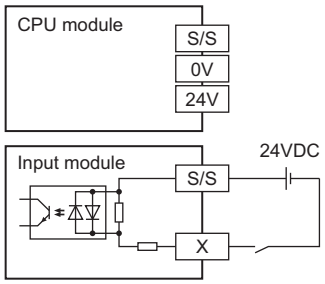	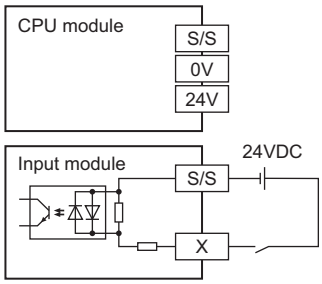
When using 24VDC service power supply	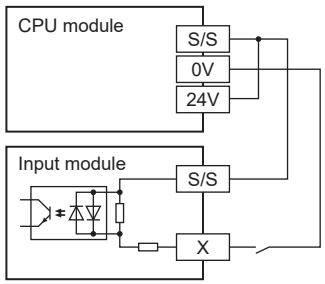	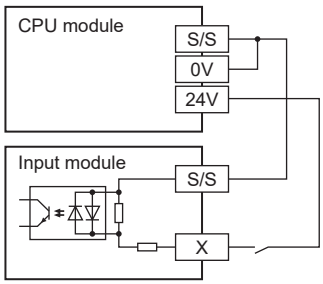

Terminal layout

FX5-8EX/ES	FX5-16EX/ES
	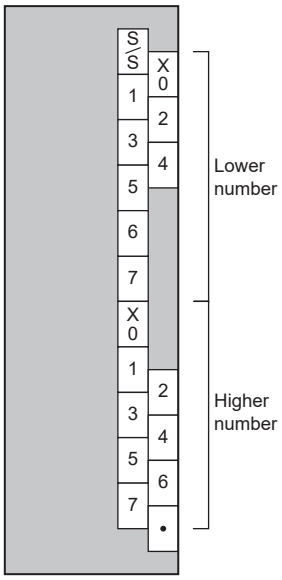

Extension connector type

Item		Specifications				
		FX5-C16EX/D	FX5-C16EX/DS	FX5-C32EX/D	FX5-C32EX/DS	FX5-C32EX/DS-TS
Current consumption	5VDC	100mA	100mA	120mA	120mA	120mA
	24VDC	65mA (0mA[*1])	65mA (0mA[*1])	130mA (0mA[*1])	130mA (0mA[*1])	130mA (0mA[*1])
Mass (weight)		Approx. 0.1kg	Approx. 0.1kg	Approx. 0.15kg	Approx. 0.15kg	Approx. 0.15kg
External color		Munsell 0.6B7.6/0.2				
■Input specifications						
Number of input points		16 points	16 points	32 points		
Connection type		Connector				Spring clamp terminal block
Input type		Sink	Sink/source	Sink	Sink/source	Sink/source
Input signal voltage		24VDC +20%, -15%				
Input signal current		4.0mA/24VDC				
Input impedance		5.6kΩ				
Input sensitivity current	On	3.0mA or more				
	Off	1.5mA or less				
Input response time	On	50μs or less				
	Off	150μs or less				
Input signal format (Input sensor form)		No-voltage contact input Sink: NPN open collector transistor Source: PNP open collector transistor				
Indication of input operation		LED turns on when input is on. With FX5-C32EX/D(S), the lower number/higher number order is switched with the DISP switch F/L.				

*1 Current consumption when external power supply is used for the input circuit.

• Circuit configuration

Item		Circuit configuration diagram	
		Sink input wiring	Source input wiring
When using external power supply	FX5-C16EX/D FX5-C32EX/D	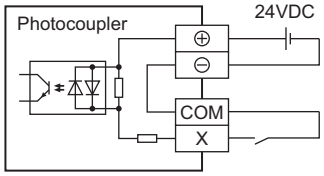	—
	FX5-C16EX/DS FX5-C32EX/DS	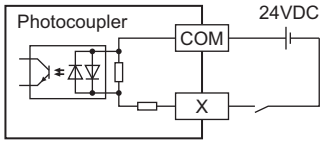	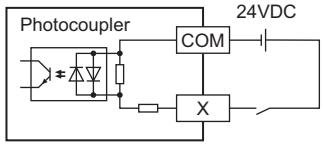
	FX5-C32EX/DS-TS	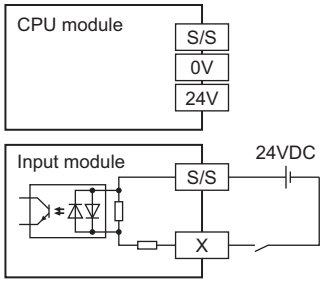	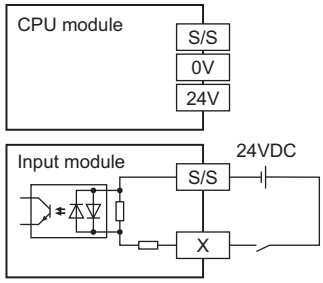
When using 24VDC service power supply	FX5-C16EX/DS FX5-C32EX/DS FX5-C32EX/DS-TS	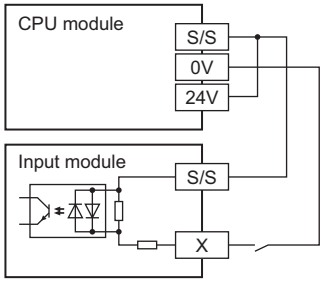	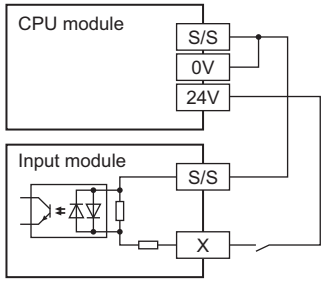

Terminal layout

: Indicates that the terminals are connected to each other in the programmable controller.

Also, ❶ and ❷ indicate that the terminals are connected to each other in the programmable controller.

FX5-C16EX/D	FX5-C16EX/DS	FX5-C32EX/D	FX5-C32EX/DS	FX5-C32EX/DS-TS
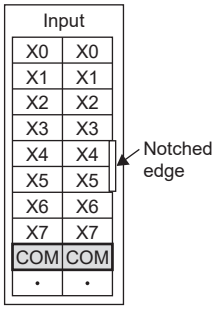	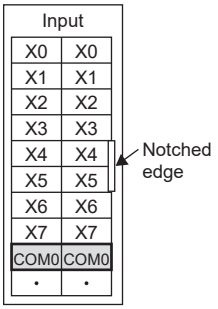	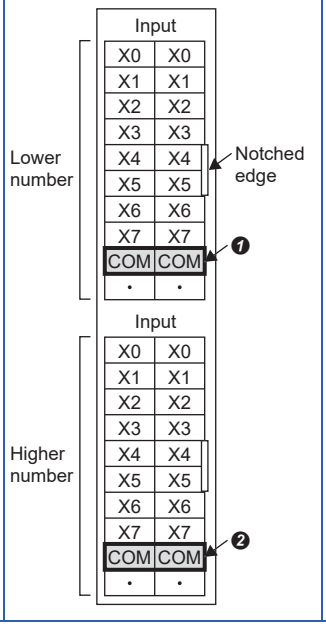	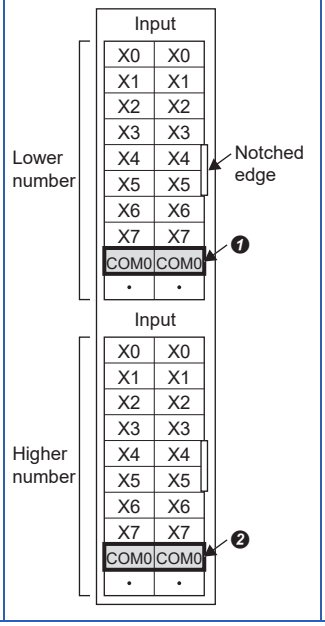	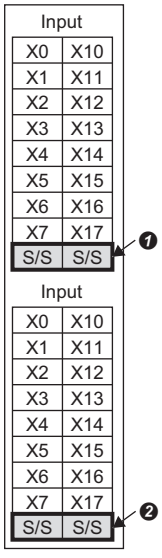

6.2 Output Module

Extension cable type

Item		Specifications					
		FX5-8EYR/ES	FX5-16EYR/ES	FX5-8EYT/ES	FX5-16EYT/ES	FX5-8EYT/ESS	FX5-16EYT/ESS
Current consumption	5VDC	75mA	100mA	75mA	100mA	75mA	100mA
	24VDC	75mA	125mA	75mA	125mA	75mA	125mA
Mass (weight)		Approx. 0.2kg	Approx. 0.25kg	Approx. 0.2kg	Approx. 0.25kg	Approx. 0.2kg	Approx. 0.25kg
External color		Munsell 0.6B7.6/0.2					
■Output specifications							
Number of output points		8 points	16 points	8 points	16 points	8 points	16 points
Connection type		Screw terminal block (M3 screws)					
Output type		Relay		Transistor/sink output		Transistor/source output	
External power supply		30VDC or less 240VAC or less*1		5-30VDC			
Indication of output operation		LED turns on when output is on.					
Max. load		2A/point The total load current of resistance loads per common terminal should be the following value. • 4 output points/common terminal: 8A or less • 8 output points/common terminal: 8A or less		0.5A/point The total load current of resistance loads per common terminal should be the following value. • 4 output points/common terminal: 0.8A or less • 8 output points/common terminal: 1.6A or less			
Open circuit leakage current		—		0.1mA/30VDC			
Min. load		5VDC, 2mA (reference values)		—			
Response time	Off → On	Approx. 10ms	Approx. 10ms	0.2ms or less/200mA (at 24VDC)			
	On → Off	Approx. 10ms	Approx. 10ms	0.2ms or less/200mA (at 24VDC)			
Voltage drop when ON		—		1.5V or less			

*1 250VAC or less when the module does not comply with CE, UL, or cUL standards

• Circuit configuration

Item	Circuit configuration diagram
Relay output	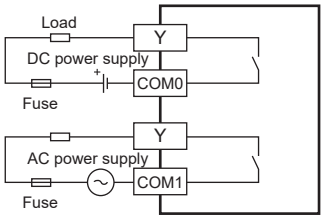

Item	Circuit configuration diagram	
	Sink output wiring	Source output wiring
Transistor output	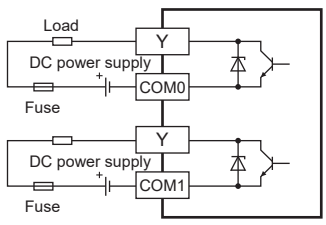	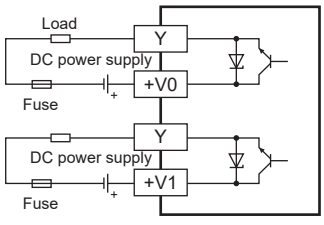

Terminal layout

FX5-8EYR/ES FX5-8EYT/ES	FX5-16EYR/ES FX5-16EYT/ES	FX5-8EYT/ESS	FX5-16EYT/ESS
	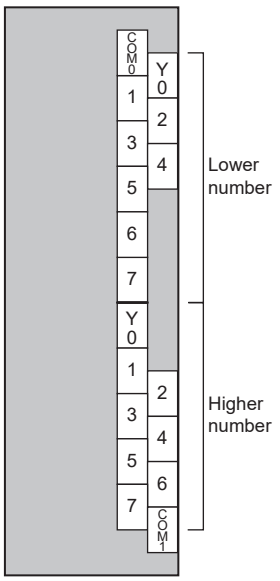	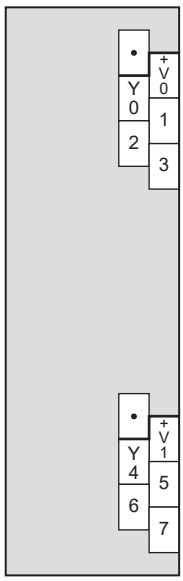	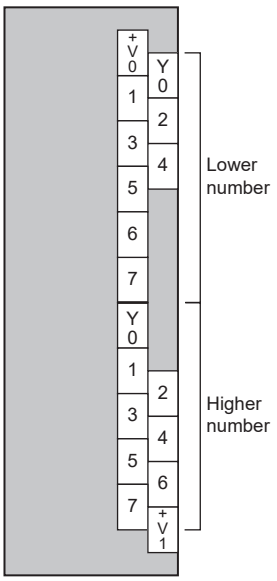

Extension connector type

Item		Specifications						
		FX5-C16EYR/D-TS	FX5-C16EYT/D	FX5-C32EYT/D	FX5-C32EYT/D-TS	FX5-C16EYT/DSS	FX5-C32EYT/DSS	FX5-C32EYT/DSS-TS
Current consumption	5VDC	100mA	100mA	120mA	120mA	100mA	120mA	120mA
	24VDC	100mA	100mA	200mA	200mA	100mA	200mA	200mA
Mass (weight)		Approx. 0.2kg	Approx. 0.1kg	Approx. 0.15kg	Approx. 0.15kg	Approx. 0.1kg	Approx. 0.15kg	Approx. 0.15kg
External color		Munsell 0.6B7.6/0.2						
■Output specifications								
Number of output points		16 points	16 points	32 points		16 points	32 points	
Connection type		Spring clamp terminal block	Connector		Spring clamp terminal block	Connector		Spring clamp terminal block
Output type		Relay	Transistor/sink output			Transistor/source output		
External power supply		30VDC or less 240VAC or less*1	5-30VDC					
Indication of output operation		LED turns on when output is on. With FX5-C32EYT/D, the lower number/higher number order is switched with the DISP switch F/L.						
Max. load		2A/point The total load current of resistance loads per common terminal should be the following value. • 8 output points/common terminal: 4A or less*2	0.1A/point The total load current of resistance loads per common terminal should be the following value. • 8 output points/common terminal: 0.8A or less					
Open circuit leakage current		—	0.1mA/30VDC					
Min. load		5VDC, 2mA (reference values)	—					
Response time	Off → On	Approx. 10ms	0.2ms or less/100mA (at 24VDC)					
	On → Off	Approx. 10ms	0.2ms or less/100mA (at 24VDC)					
Voltage drop when ON		—	1.5V or less					

*1 250VAC or less when the module does not comply with CE, UL, or cUL standards

*2 When two common terminals are connected outside the I/O module, resistance load is 8A or less.

Terminal layout

: Indicates that the terminals are connected to each other in the programmable controller.

FX5-C16EYR/D-TS

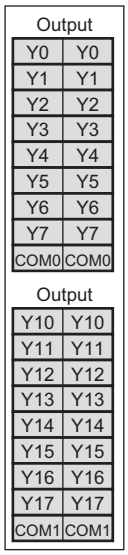

FX5-C16EYT/D

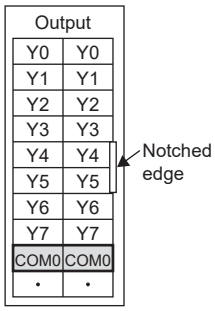

FX5-C16EYT/DSS

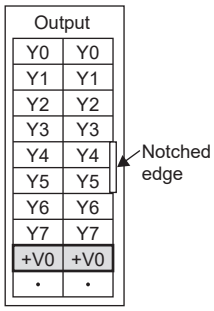

FX5-C32EYT/D

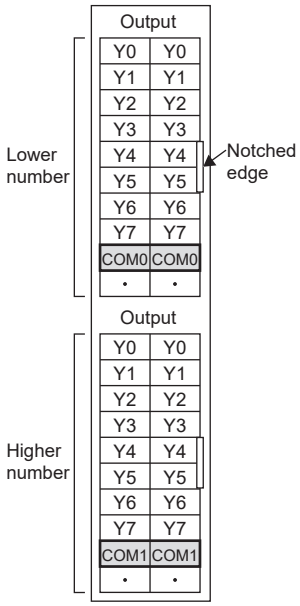

FX5-C32EYT/D-TS

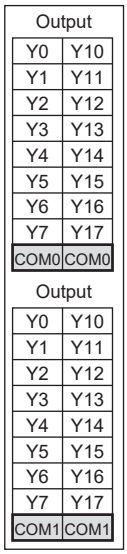

FX5-C32EYT/DSS

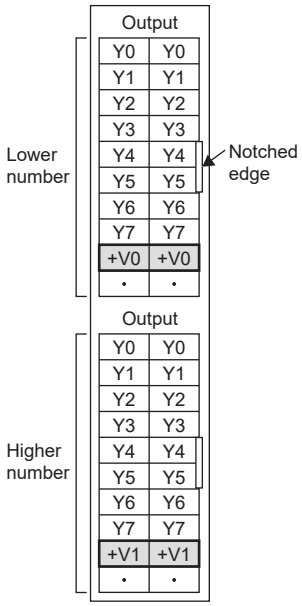

FX5-C32EYT/DSS-TS

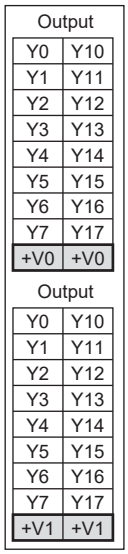

6.3 I/O Module

Extension cable type

Item		Specifications		
		FX5-16ER/ES	FX5-16ET/ES	FX5-16ET/ESS
Current consumption	5VDC	100mA		
	24VDC	125mA (85mA[*1])		
Mass (weight)		Approx. 0.25kg		
External color		Munsell 0.6B7.6/0.2		
■Input specifications				
Number of input points		8 points		
Connection type		Screw terminal block (M3 screws)		
Input type		Sink/source		
Input signal voltage		24VDC +20%, -15%		
Input signal current		4.0mA/24VDC		
Input impedance		5.6kΩ		
Input sensitivity current	On	3.0mA or more		
	Off	1.5mA or less		
Input response time	On	50μs or less		
	Off	150μs or less		
Input signal format (Input sensor form)		No-voltage contact input Sink: NPN open collector transistor Source: PNP open collector transistor		
Indication of input operation		LED turns on when input is on.		
■Output specifications				
Number of output points		8 points		
Connection type		Screw terminal block (M3 screws)		
Output type		Relay	Transistor/sink output	Transistor/source output
External power supply		30VDC or less 240VAC or less[*2]	5-30VDC	
Indication of output operation		LED turns on when output is on.		
Max. load		2A/point The total load current of resistance loads per common terminal should be the following value. • 4 output points/common terminal: 8A or less • 8 output points/common terminal: 8A or less	0.5A/point The total load current of resistance loads per common terminal should be the following value. • 4 output points/common terminal: 0.8A or less • 8 output points/common terminal: 1.6A or less	
Open circuit leakage current		—	0.1mA/30VDC	
Min. load		5VDC, 2mA (reference values)	—	
Response time	Off → On	Approx. 10ms	0.2ms or less/200mA (at 24VDC)	
	On → Off	Approx. 10ms	0.2ms or less/200mA (at 24VDC)	
Voltage drop when ON		—	1.5V or less	

*1 Current consumption when external power supply is used for the input circuit.

*2 250VAC or less when the module does not comply with CE, UL, or cUL standards

• Input circuit configuration

Item	Circuit configuration diagram	
	Sink input wiring	Source input wiring
When using external power supply	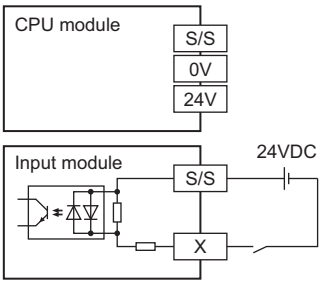	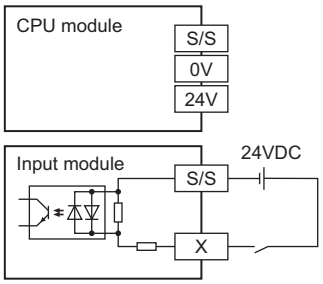
When using 24VDC service power supply	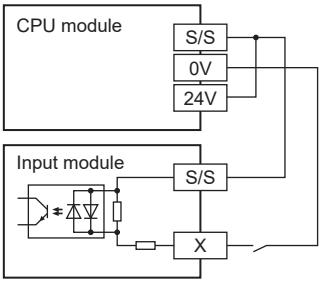	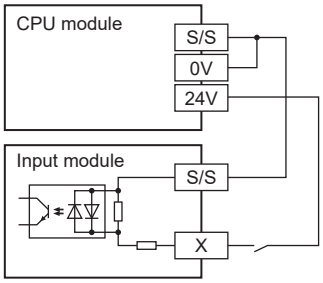

• Output circuit configuration

Item	Circuit configuration diagram
Relay output	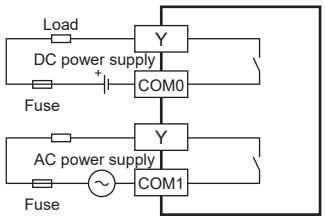

Item	Circuit configuration diagram	
	Sink output wiring	Source output wiring
Transistor output	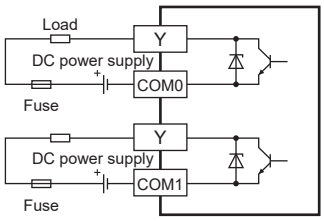	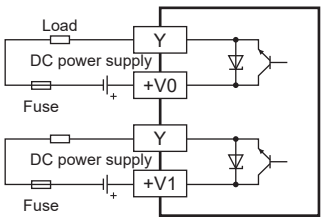

Terminal layout

FX5-16ER/ES FX5-16ET/ES	FX5-16ET/ESS
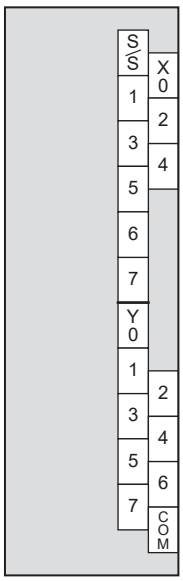	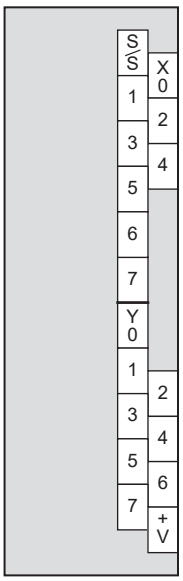

Extension connector type

Item		Specifications			
		FX5-C32ET/D	FX5-C32ET/DS-TS	FX5-C32ET/DSS	FX5-C32ET/DSS-TS
Current consumption	5VDC	120mA			
	24VDC	165mA (100mA[*1])			
Mass (weight)		Approx. 0.25kg	Approx. 0.15kg		
External color		Munsell 0.6B7.6/0.2			
■Input specifications					
Number of input points		16 points			
Connection type		Connector	Spring clamp terminal block	Connector	Spring clamp terminal block
Input type		Sink	Sink/source		
Input signal voltage		24VDC +20%, -15%			
Input signal current		4.0mA/24VDC			
Input impedance		5.6kΩ			
Input sensitivity current	On	3.0mA or more			
	Off	1.5mA or less			
Input response time	On	50μs or less			
	Off	150μs or less			
Input signal format (Input sensor form)		No-voltage contact input Sink: NPN open collector transistor	No-voltage contact input Sink: NPN open collector transistor Source: PNP open collector transistor		
Indication of input operation		LED turns on when input is on. With FX5-C32ET/D(SS), the input/output is switched with the DISP switch IN/OUT.			
■Output specifications					
Number of output points		16 points			
Connection type		Connector	Spring clamp terminal block	Connector	Spring clamp terminal block
Output type		Transistor/sink output		Transistor/source output	
External power supply		5-30VDC			
Indication of output operation		LED turns on when output is on.			
Max. load		0.1A/point The total load current of resistance loads per common terminal should be the following value. • 8 output points/common terminal: 0.8A or less			
Open circuit leakage current		0.1mA/30VDC			
Response time	Off → On	0.2ms or less/100mA (at 24VDC)			
	On → Off	0.2ms or less/100mA (at 24VDC)			
Voltage drop when ON		1.5V or less			

*1 Current consumption when external power supply is used for the input circuit.

• Input circuit configuration

Item		Circuit configuration diagram	
		Sink input wiring	Source input wiring
When using external power supply	FX5-C32ET/D	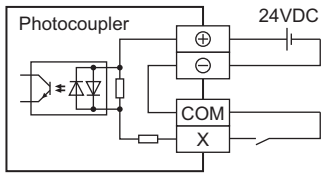	—
	FX5-C32ET/DSS	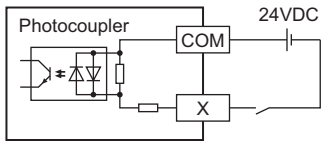	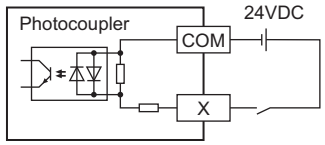
	FX5-C32ET/DS-TS, FX5-C32ET/DSS-TS	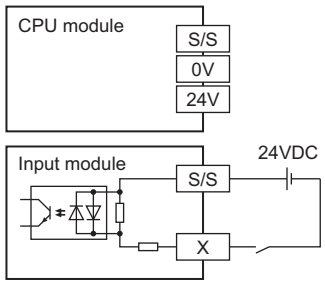	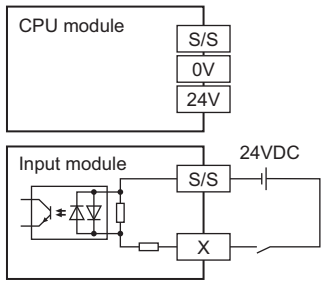
When using 24VDC service power supply	FX5-C32ET/DSS, FX5-C32ET/DS-TS, FX5-C32ET/DSS-TS	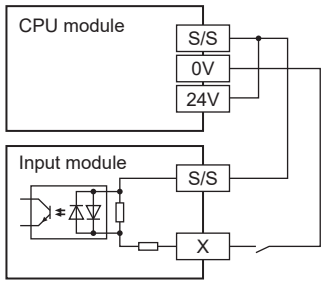	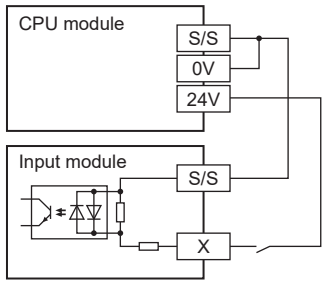

• Output circuit configuration

Item	Circuit configuration diagram	
	Sink output wiring	Source output wiring
Transistor output	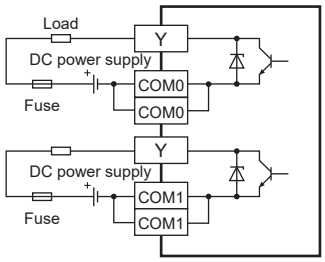	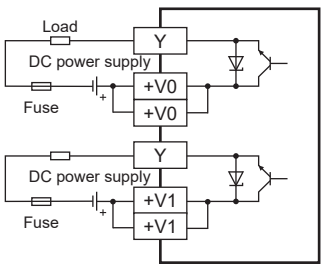

Terminal layout

: Indicates that the terminals are connected to each other in the programmable controller.

FX5-C32ET/D

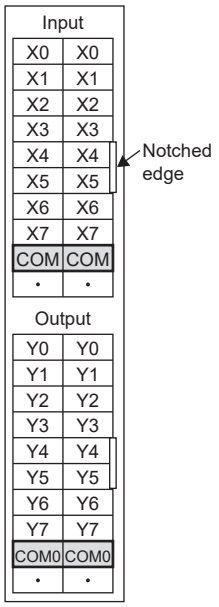

FX5-C32ET/DS-TS

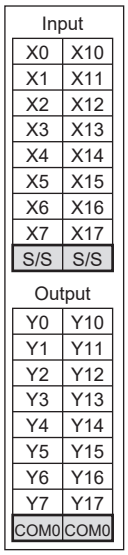

FX5-C32ET/DSS

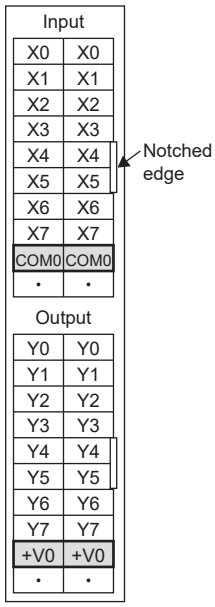

FX5-C32ET/DSS-TS

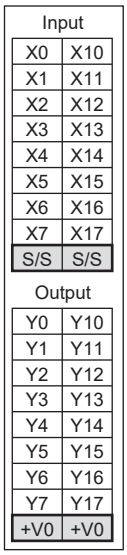

6.4 Powered I/O Module

Extension cable type

Item		Specifications					
		FX5-32ER/ES	FX5-32ET/ES	FX5-32ET/ESS	FX5-32ER/DS	FX5-32ET/DS	FX5-32ET/DSS
Mass (weight)		Approx. 0.65kg					
External color		Munsell 0.6B7.6/0.2					
■Power supply specifications							
Rated voltage		100 to 240VAC			24VDC		
Voltage fluctuation range		-15%, +10%			-30%, +20%		
Rated frequency		50/60Hz			—		
Allowable instantaneous power failure time[*1]		Operation can be continued upon occurrence of instantaneous power failure for 10ms or less.			Operation can be continued upon occurrence of instantaneous power failure for 5ms or less.		
Power fuse		250V, 3.15A time-lag fuse					
Rush current		30A max. 5ms or less/100VAC 65A max. 5ms or less/200VAC			50A max. 0.5ms or less/24VDC		
Power consumption[*2]		25W					
24VDC service power supply capacity[*3]	When 24VDC service power supply is used for the input circuit of the powered input/output module	250mA			—		
	When external power supply is used for the input circuit of the powered input/output module	310mA					
24VDC built-in power supply capacity		—			310mA		
5VDC built-in power supply		965mA					
■Input specifications							
Number of input points		16 points					
Connection type		Screw terminal block (M3 screws)					
Input type		Sink/source					
Input signal voltage		24VDC +20%, -15%					
Input signal current		4.0mA/24VDC					
Input impedance		5.6kΩ					
Input sensitivity current	On	3.0mA or more					
	Off	1.5mA or less					
Input response frequency		—					
Input response time	On	50μs or less					
	Off	150μs or less					
Input signal format (Input sensor form)		No-voltage contact input Sink: NPN open collector transistor Source: PNP open collector transistor					
Indication of input operation		LED turns on when input is on.					
■Output specifications							
Number of output points		16 points					
Connection type		Screw terminal block (M3 screws)					
Output type		Relay	Transistor/sink output	Transistor/source output	Relay	Transistor/sink output	Transistor/source output

Item		Specifications					
		FX5-32ER/ES	FX5-32ET/ES	FX5-32ET/ESS	FX5-32ER/DS	FX5-32ET/DS	FX5-32ET/DSS
External power supply		30VDC or less 240VAC or less	5-30VDC		30VDC or less 240VAC or less	5-30VDC	
Indication of output operation		LED turns on when output is on.					
Max. load		2A/point The total load current of resistance loads per common terminal should be the following value. • 4 output points/common terminal: 8A or less • 8 output points/common terminal: 8A or less	0.5A/point The total load current of resistance loads per common terminal should be the following value. • 4 output points/common terminal: 0.8A or less • 8 output points/common terminal: 1.6A or less		2A/point The total load current of resistance loads per common terminal should be the following value. • 4 output points/common terminal: 8A or less • 8 output points/common terminal: 8A or less	0.5A/point The total load current of resistance loads per common terminal should be the following value. • 4 output points/common terminal: 0.8A or less • 8 output points/common terminal: 1.6A or less	
Open circuit leakage current		—	0.1mA/30VDC		—	0.1mA/30VDC	
Min. load		5VDC, 2mA (reference values)	—		5VDC, 2mA (reference values)	—	
Response time	Off → On	Approx. 10ms	0.2ms or less/200mA (at 24VDC)		Approx. 10ms	0.2ms or less/200mA (at 24VDC)	
	On → Off	Approx. 10ms	0.2ms or less/200mA (at 24VDC)		Approx. 10ms	0.2ms or less/200mA (at 24VDC)	
Voltage drop when ON		—	1.5V or less		—	1.5V or less	

*1 The FX5 safety extension module is not subject to the allowable momentary power failure time.

*2 This value is the value when all 24VDC service power supplies are used in the maximum configuration connectable to the powered input/output module. (The current of the input circuit is included.)

*3 When I/O modules are connected, they consume current from the 24VDC service power supply. For details on the 24VDC service power supply, refer to ☞ Page 56 Current consumption.

• Input circuit configuration

Item	Circuit configuration diagram	
	Sink input wiring	Source input wiring
When using external power supply	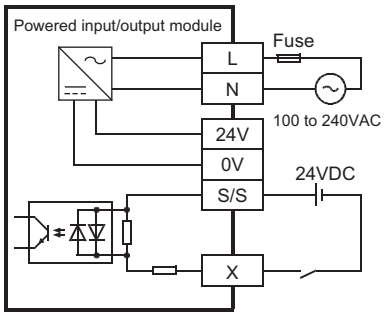	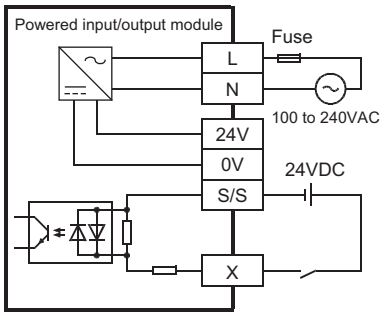
When using 24VDC service power supply	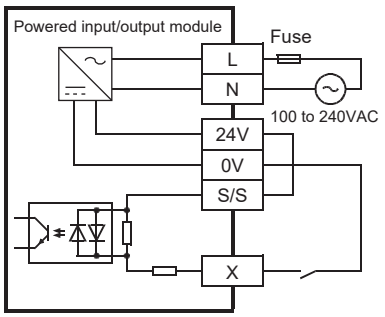	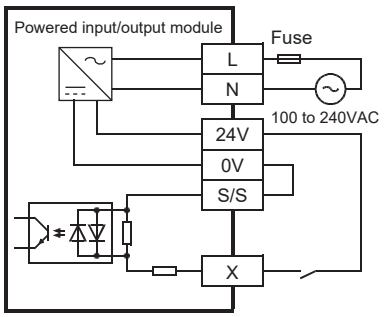

• Output circuit configuration

Item	Circuit configuration diagram
Relay output	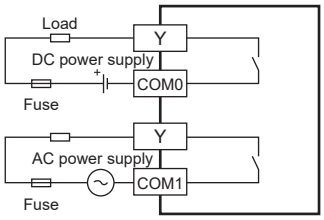

Item	Circuit configuration diagram	
	Sink output wiring	Source output wiring
Transistor output	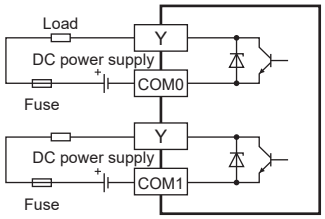	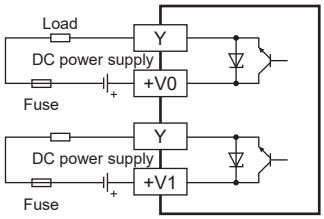

Terminal layout

Model	Terminal layout
FX5-32ER/ES, FX5-32ET/ES	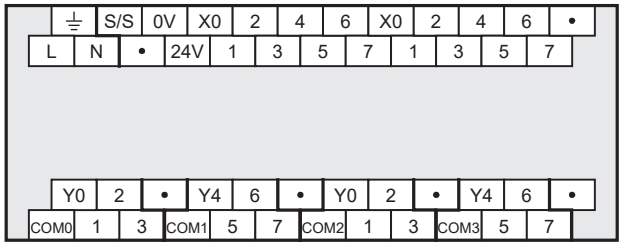
FX5-32ET/ESS	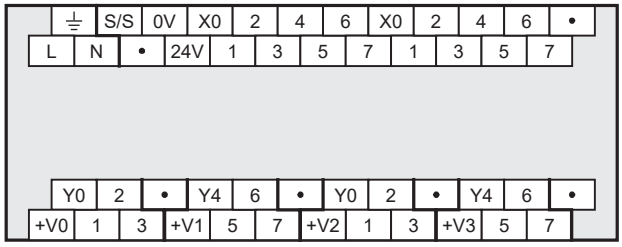
FX5-32ER/DS, FX5-32ET/DS	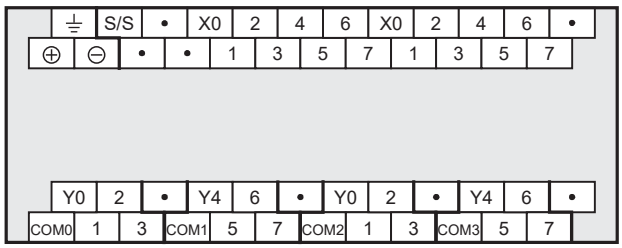
FX5-32ET/DSS	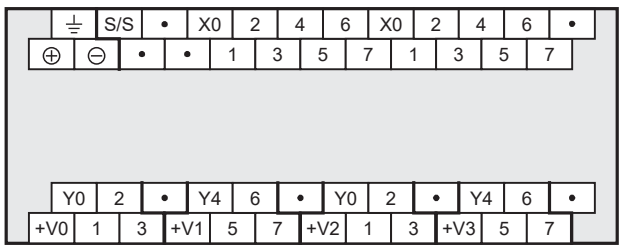

6.5 High-Speed Pulse Input/Output Module

Extension cable type

Item		Specifications	
		FX5-16ET/ES-H	FX5-16ET/ESS-H
Current consumption	5VDC	100mA	
	24VDC	125mA (85mA[*1])	
Mass (weight)		Approx. 0.25kg	
External color		Munsell 0.6B7.6/0.2	
■Input specifications			
Number of input points		8 points	
Connection type		Screw terminal block (M3 screws)	
Input type		Sink/source	
Input signal voltage		24VDC +20%, -15%	
Input signal current		5.3mA/24VDC	
Input impedance		4.3kΩ	
Input sensitivity current	On	3.5mA or more	
	Off	1.5mA or less	
Input response frequency		• X0 to X5: 200kHz • X6, X7: 10kHz	
Input response time	On	• X0 to X5: 2.5μs or less • X6, X7: 30μs or less	
	Off	• X0 to X5: 2.5μs or less • X6, X7: 50μs or less	
Input signal format (Input sensor form)		No-voltage contact input Sink: NPN open collector transistor Source: PNP open collector transistor	
Indication of input operation		LED turns on when input is on.	
■Output specifications			
Number of output points		8 points	
Connection type		Screw terminal block (M3 screws)	
Output type		Transistor/sink output	Transistor/source output
External power supply		5-30VDC	
Indication of output operation		LED turns on when output is on.	
Max. load		0.5A/point The total load current of resistance loads per common terminal should be the following value. • 4 output points/common terminal: 0.8A or less • 8 output points/common terminal: 1.6A or less	
Open circuit leakage current		0.1mA/30VDC	
Min. load		—	
Response time	Off → On	• Y0, Y1, Y4, Y5: 2.5μs or less/10mA (at 5-24VDC) • Y2, Y3, Y6, Y7: 0.2ms or less/200mA (at 24VDC)	
	On → Off	• Y0, Y1, Y4, Y5: 2.5μs or less/10mA (at 5-24VDC) • Y2, Y3, Y6, Y7: 0.2ms or less/200mA (at 24VDC)	
Voltage drop when ON		1.5V or less (Y0, Y1, Y4, and Y5: 1.0V or less)	

*1 Current consumption when external power supply is used for the input circuit.

• Input circuit configuration

Item	Circuit configuration diagram	
	Sink input wiring	Source input wiring
When using external power supply	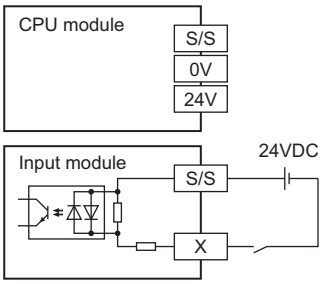	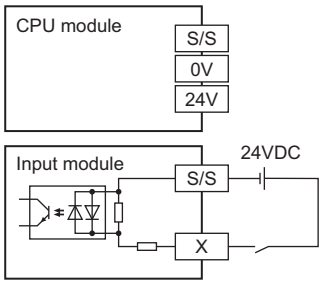
When using 24VDC service power supply	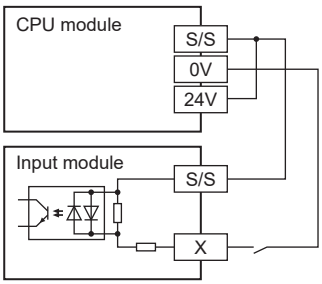	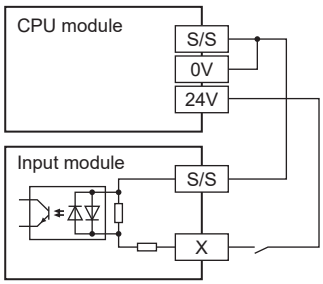

• Output circuit configuration

Item	Circuit configuration diagram	
	Sink output wiring	Source output wiring
Transistor output	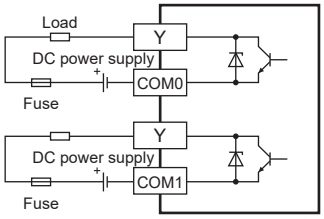	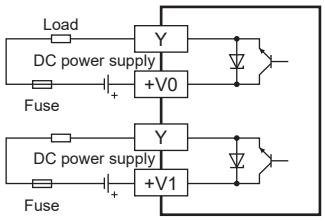

Terminal layout

FX5-16ET/ES-H	FX5-16ET/ESS-H
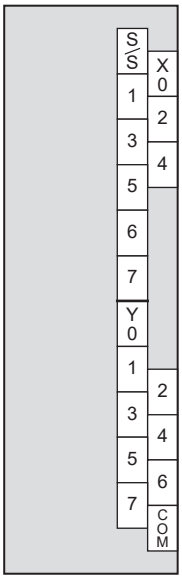	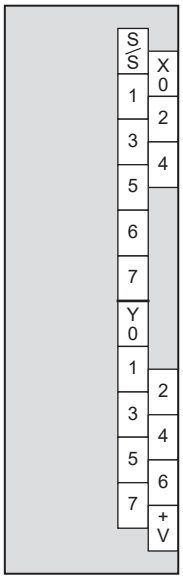

6.6 External Dimensions

Extension cable type

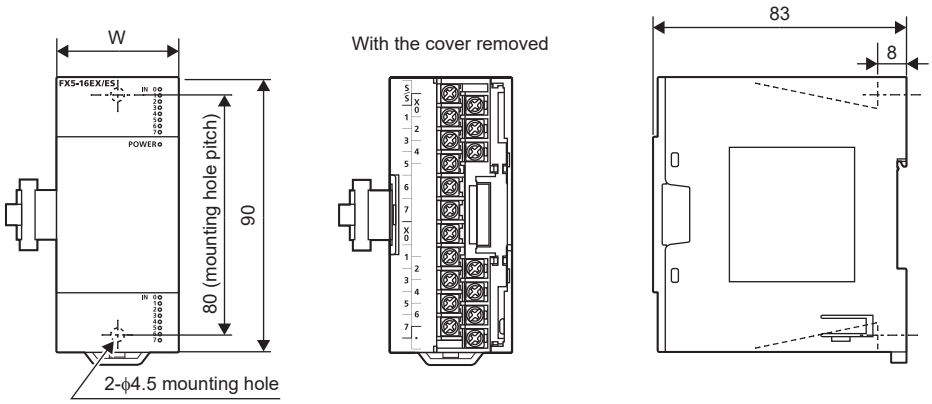

(Unit: mm)

Product	Model	W
Input module	FX5-8EX/ES, FX5-16EX/ES	40mm
Output module	FX5-8EYR/ES, FX5-8EYT/ES, FX5-8EYT/ESS, FX5-16EYR/ES, FX5-16EYT/ES, FX5-16EYT/ESS	40mm
I/O module	FX5-16ER/ES, FX5-16ET/ES, FX5-16ET/ESS	40mm
High-speed pulse input/output module	FX5-16ET/ES-H, FX5-16ET/ESS-H	40mm

Extension connector type

■Input/output connection type: Connector

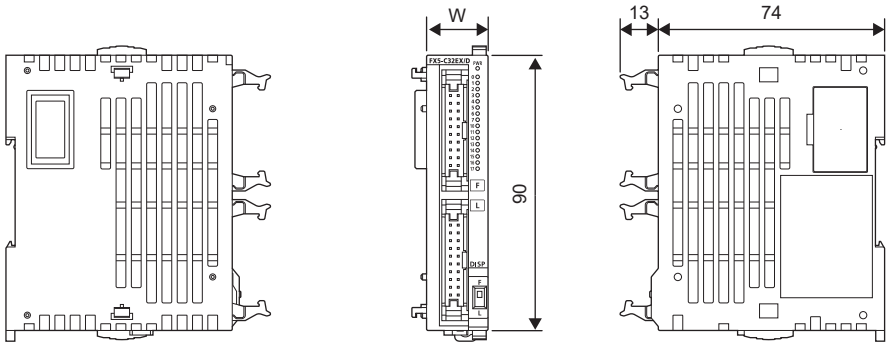

(Unit: mm)

Product	Model	W
Input module	FX5-C16EX/D, FX5-C16EX/DS	14.6mm
	FX5-C32EX/D, FX5-C32EX/DS	20.1mm
Output module	FX5-C16EYT/D, FX5-C16EYT/DSS	14.6mm
	FX5-C32EYT/D, FX5-C32EYT/DSS	20.1mm
I/O module	FX5-C32ET/D, FX5-C32ET/DSS	20.1mm

■Input/output connection type: Spring clamp terminal block

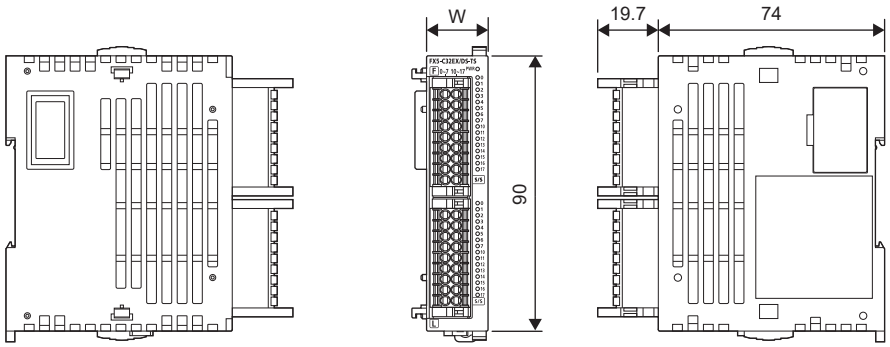

(Unit: mm)

Product	Model	W
Input module	FX5-C32EX/DS-TS	20.1mm
Output module	FX5-C16EYR/D-TS	30.7mm
	FX5-C32EYT/D-TS, FX5-C32EYT/DSS-TS	20.1mm
I/O module	FX5-C32ET/DS-TS, FX5-C32ET/DSS-TS	20.1mm

Powered input/output module

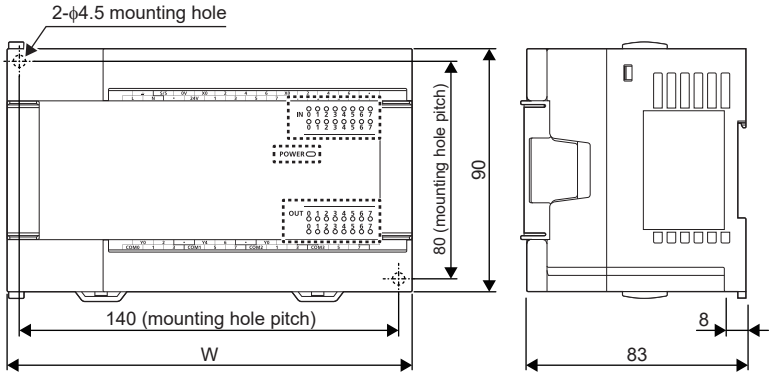

(Unit: mm)

Product	Model	W
Powered input/output module	FX5-32ER/ES, FX5-32ET/ES, FX5-32ET/ESS, FX5-32ER/DS, FX5-32ET/DS, FX5-32ET/DSS	150mm

7 EXTENSION POWER SUPPLY MODULE PERFORMANCE SPECIFICATIONS

This chapter describes the performance specifications of the extension power supply module.

7.1 Performance Specifications

Item	Specifications	
	FX5-1PSU-5V	FX5-C1PS-5V
Rated voltage	100 to 240VAC	24VDC
Voltage fluctuation range	-15%, +10%	+20%, -15%
Rated frequency	50/60Hz	—
Allowable instantaneous power failure time*1	Operation can be continued upon occurrence of instantaneous power failure for 10ms or less.	Operation can be continued upon occurrence of instantaneous power failure for 5ms or less.
Power fuse	250V, 3.15A time-lag fuse	125V, 3.15A time-lag fuse
Rush current	25A max. 5ms or less/100VAC 50A max. 5ms or less/200VAC	35A max. 0.5ms or less/24VDC*2
Power consumption	20W max.	30W*3
24VDC built-in power supply capacity	300mA	625mA
5VDC built-in power supply	1200mA	1200mA
External color	Munsell 0.6B7.6/0.2	Munsell 0.6B7.6/0.2
Mass (weight)	Approx. 0.3kg	Approx. 0.1kg

*1 The FX5 safety extension module is not subject to the allowable momentary power failure time.

*2 The voltage fluctuation range is included.

*3 When the ambient temperature exceeds 40℃, use the extension power supply module at the following current values within the derating range.

Derating chart

■ For FX5-1PSU-5V

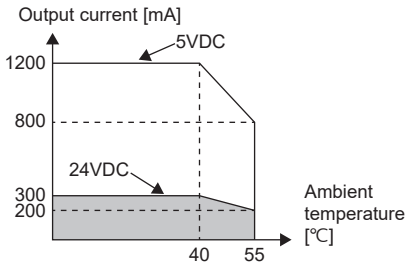

■ For FX5-C1PS-5V

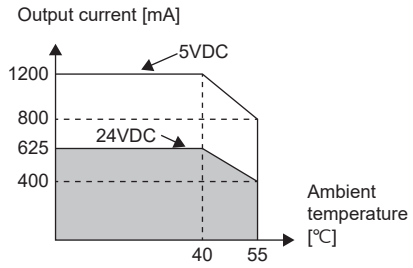

7.2 External Dimensions

Extension cable type

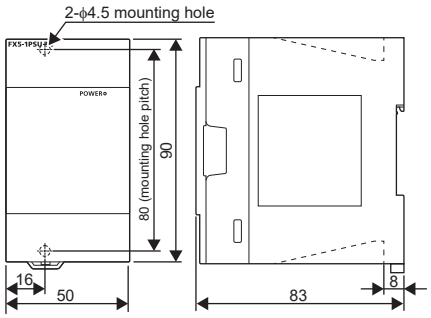

(Unit: mm)

Product	Model
Extension power supply module	FX5-1PSU-5V

Extension connector type

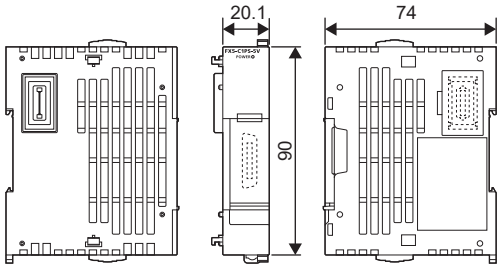

(Unit: mm)

Product	Model
Extension power supply module	FX5-C1PS-5V

8 CONNECTOR CONVERSION MODULE PERFORMANCE SPECIFICATIONS

This chapter describes the performance specifications of the connector conversion module.

8.1 Specifications

Item	Specifications	
	FX5-CNV-IF	FX5-CNV-IFC
External color	Munsell 0.6B7.6/0.2	Munsell 0.6B7.6/0.2
Mass (weight)	Approx. 60g	Approx. 60g

8.2 External Dimensions

FX5-CNV-IF

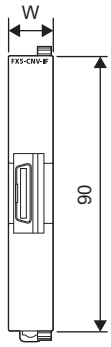

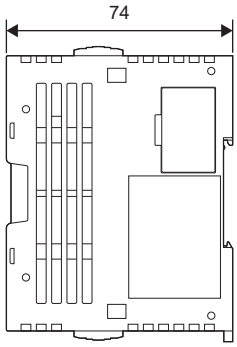

FX5-CNV-IFC

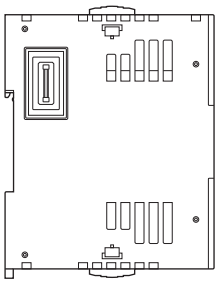

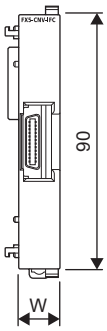

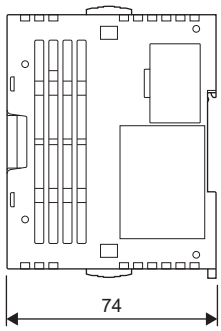

(Unit: mm)

Product	Model	W
Connector conversion module	FX5-CNV-IF	14.6mm
	FX5-CNV-IFC	14.6mm

MEMO

9 EXPANSION ADAPTER PERFORMANCE SPECIFICATIONS

This chapter describes the performance specifications of the expansion adapter.

9.1 Analog Adapter

Power supply specifications

The following table lists the power supply specifications.

Item		Specifications				
		FX5-4A-ADP	FX5-4AD-ADP	FX5-4DA-ADP	FX5-4AD-PT-ADP	FX5-4AD-TC-ADP
External power supply*1	Power supply voltage	24VDC +20%/-15%	—	24VDC +20%/-15%	—	
	Current consumption	100mA	—	160mA	—	
Internal power supply*2	Power supply voltage	5VDC	24VDC, 5VDC	5VDC	24VDC, 5VDC	
	Current consumption	10mA	5VDC: 10mA 24VDC: 20mA	10mA	5VDC: 10mA 24VDC: 20mA	

*1 Power is supplied externally through the power supply connector of the adapter.

*2 Power is supplied internally from the power capacity of the CPU module.

For the I/O specifications, refer to the following.

MELSEC iQ-F FX5 User's Manual (Application)

Terminal layout

The following shows the terminal layout.

• FX5-4A-ADP

Terminal block	Signal name	Function	
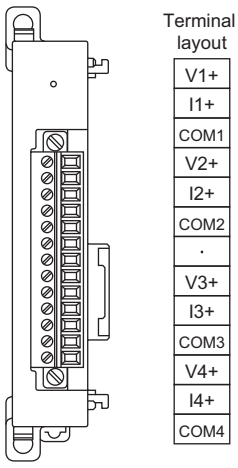	V1+	CH1	Voltage/current input
	I1+		For current input short circuit
	COM1		Common
	V2+	CH2	Voltage/current input
	I2+		For current input short circuit
	COM2		Common
	·	Do not wire this terminal.	
	V3+	CH3	Voltage output
	I3+		Current output
	COM3		Common
	V4+	CH4	Voltage output
	I4+		Current output
	COM4		Common

Power supply connector	Signal name	Function
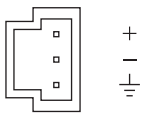	+	24VDC power supply (+)
	-	24VDC power supply (-)
	⏚	Ground

• FX5-4AD-ADP

Terminal block	Signal name	Function	
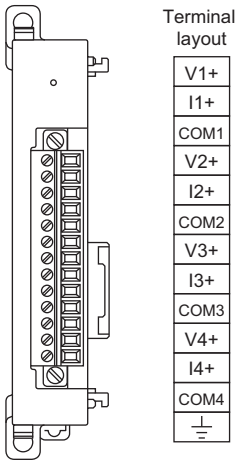	V1+	CH1	Voltage/current input
	I1+		For current input short circuit
	COM1		Common
	V2+	CH2	Voltage/current input
	I2+		For current input short circuit
	COM2		Common
	V3+	CH3	Voltage/current input
	I3+		For current input short circuit
	COM3		Common
	V4+	CH4	Voltage/current input
	I4+		For current input short circuit
	COM4		Common
	⏚	Ground	

• FX5-4DA-ADP

Terminal block	Signal name	Function	
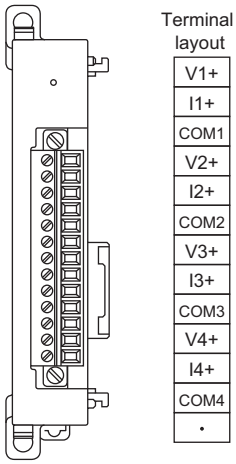	V1+	CH1	Voltage output
	I1+		Current output
	COM1		Common
	V2+	CH2	Voltage output
	I2+		Current output
	COM2		Common
	V3+	CH3	Voltage output
	I3+		Current output
	COM3		Common
	V4+	CH4	Voltage output
	I4+		Current output
	COM4		Common
	·	Do not wire this terminal.	

• FX5-4AD-PT-ADP

Terminal block	Signal name	Function	
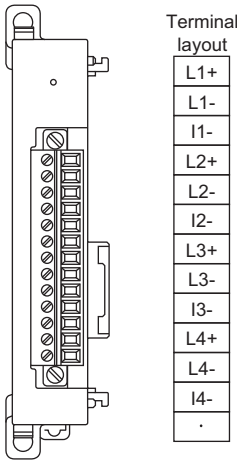	L1+	CH1	Resistance temperature detector + input
	L1-		Resistance temperature detector - input
	I1-		Resistance temperature detector common input
	L2+	CH2	Resistance temperature detector + input
	L2-		Resistance temperature detector - input
	I2		Resistance temperature detector common input
	L3+	CH3	Resistance temperature detector + input
	L3-		Resistance temperature detector - input
	I3		Resistance temperature detector common input
	L4+	CH4	Resistance temperature detector + input
	L4-		Resistance temperature detector - input
	I4		Resistance temperature detector common input
	·	Do not wire this terminal.	

• FX5-4AD-TC-ADP

Terminal block	Signal name	Function	
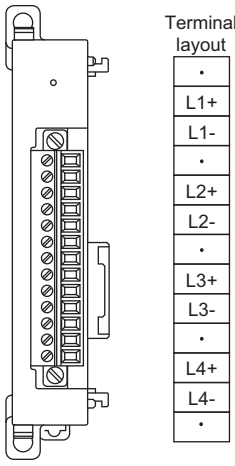	·	CH1	Do not wire this terminal.
	L1+		Thermocouple + input
	L1-		Thermocouple - input
	·	CH2	Do not wire this terminal.
	L2+		Thermocouple + input
	L2-		Thermocouple - input
	·	CH3	Do not wire this terminal.
	L3+		Thermocouple + input
	L3-		Thermocouple - input
	·	CH4	Do not wire this terminal.
	L4+		Thermocouple + input
	L4-		Thermocouple - input
	·	Do not wire this terminal.	

External dimensions

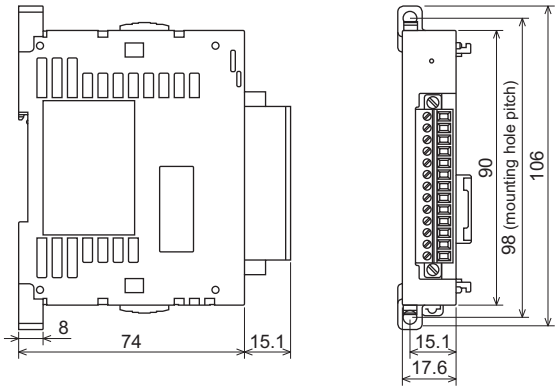

(Unit: mm)

9.2 Communication Adapter

Specifications

The following table lists the specifications.

Item		Specifications	
		FX5-232ADP	FX5-485ADP
Current consumption (internal power supply)	5VDC	30mA	20mA
	24VDC	30mA	
Transmission standard		RS-232C standard compliant	RS-485 and RS-422 standards compliant
Maximum transmission distance*1		15m	1200m
External device connection method		9-pin D-Sub (male)	European-type terminal block
Terminating resistor		—	Built-in (open/110Ω/330Ω)
Insulation		Photocoupler (between the communication line and the CPU module)	
Communication method*1		Bidirectional half duplex/bidirectional full duplex	
Communication speed*1		300/600/1200/2400/4800/9600/19200/38400/57600/115200 (bps)	

*1 The communication method and speed differ depending on the communication type.

Connector layout

The following shows the layout.

• FX5-232ADP

Connector pin layout	Pin number	Signal	Name
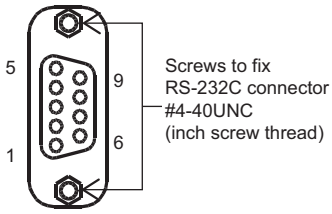	1	CD (DCD)	Receive carrier detection
	2	RD (RXD)	Receive data
	3	SD (TXD)	Send data
	4	ER (DTR)	Send request
	5	SG (GND)	Signal ground
	6	DR (DSR)	Send enabled
	7, 8, 9		Not used

• FX5-485ADP

Terminal layout	Signal name	Function
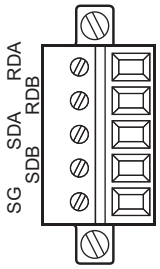	RDA (RXD+)	Receive data input
	RDB (RXD-)	
	SDA (TXD+)	Send data output
	SDB (TXD-)	
	SG (GND)	Signal ground

Point

For wiring methods, refer to the following.

MELSEC iQ-F FX5 User's Manual (Communication)

External dimensions

FX5-232ADP

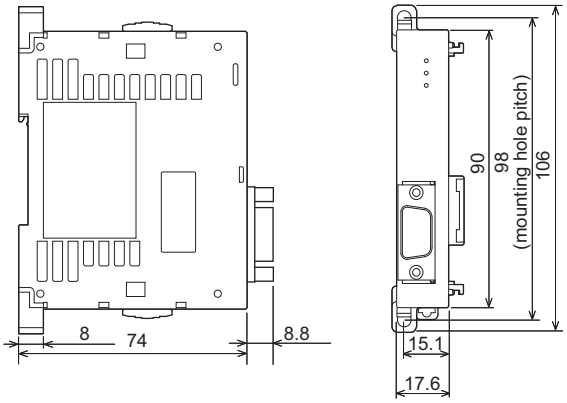

FX5-485ADP

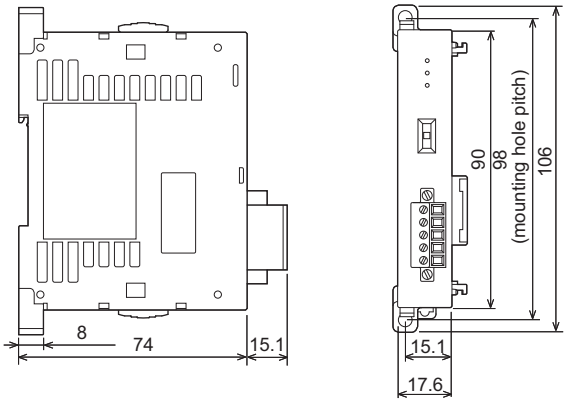

(Unit: mm)

10 EXPANSION BOARD PERFORMANCE SPECIFICATIONS

This chapter describes the performance specifications of the expansion board.

10.1 Expansion Board for Communications

Power supply specifications

The following table lists the power supply specifications.

Item		Specifications		
		FX5-232-BD	FX5-485-BD	FX5-422-BD-GOT
Current consumption (internal power supply)	5VDC	20mA		20mA*1
	24VDC	0mA		
Transmission standard		RS-232C standard compliant	RS-485 and RS-422 standards compliant	RS-422 standard compliant
Maximum transmission distance		15m	50m	Depends on the specifications of GOT*2
External device connection method		9-pin D-Sub (male)	European-type terminal block	8-pin mini-DIN (female)
Terminating resistor		—	Built-in (open/110Ω/330Ω)	—
Insulation		Non-insulation (between the communication line and the CPU module)		
Communication method*3		Bidirectional half duplex/bidirectional full duplex		Bidirectional half duplex
Communication speed*3		300/600/1200/2400/4800/9600/19200/38400/57600/115200 (bps)		9600/19200/38400/57600/115200 (bps)

*1 When the GOT of the 5V type is connected, the current consumption increases. For the current consumption, refer to the manual for the model being connected.
*2 For the maximum transmission distance, refer to the manual for the model being connected.
*3 The communication method and speed differ depending on the communication type.

Connector layout

The following shows the layout.

• FX5-232ADP

Connector pin layout	Pin number	Signal	Name
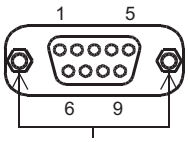 Screws to fix RS-232C connector #4-40UNC (inch screw thread)	1	CD (DCD)	Receive carrier detection
	2	RD (RXD)	Receive data
	3	SD (TXD)	Send data
	4	ER (DTR)	Send request
	5	SG (GND)	Signal ground
	6	DR (DSR)	Send enabled
	7, 8, 9		Not used

• FX5-485ADP

Terminal layout	Signal name	Function
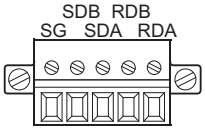	RDA (RXD+)	Receive data input
	RDB (RXD-)	
	SDA (TXD+)	Send data output
	SDB (TXD-)	
	SG (GND)	Signal ground

Point

For wiring methods, refer to the following.
MELSEC iQ-F FX5 User's Manual (Communication)

External dimensions

FX5-232-BD

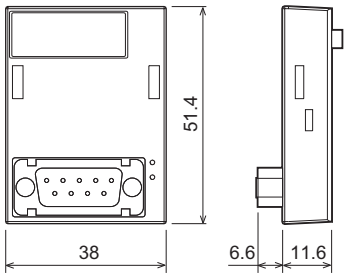

FX5-485-BD

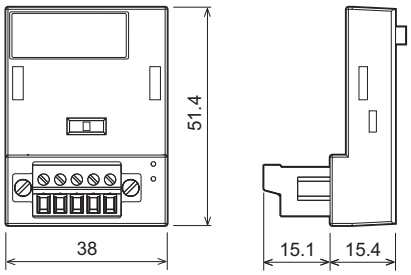

FX5-422-BD-GOT

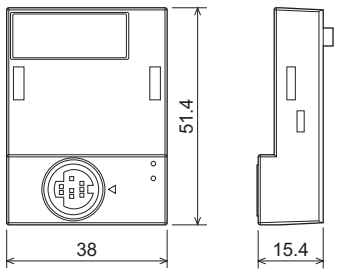

(Unit: mm)

10.2 SD Memory Card Module

External dimensions

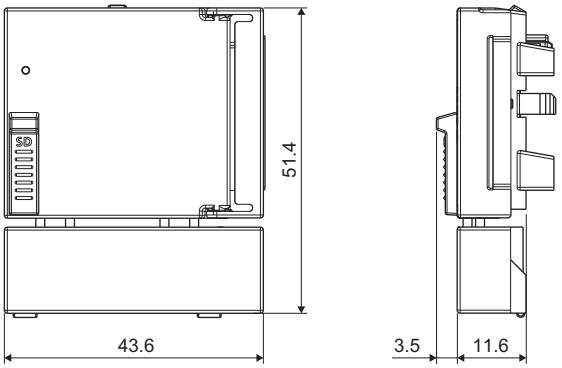

(Unit: mm)

11 SD MEMORY CARD PERFORMANCE SPECIFICATIONS

The following shows functional specifications of the SD memory card.

Item		NZ1MEM-2GBSD	NZ1MEM-4GBSD	NZ1MEM-8GBSD	NZ1MEM-16GBSD
Type		SD memory card	SDHC memory card		
Capacity		2 Gbytes	4 Gbytes	8 Gbytes	16 Gbytes
Number of writes		60000 times	100000 times		
External dimensions	Height	32mm			
	Width	24mm			
	Depth	2.1mm			
Mass (weight)		2g			

11.1 Handling of the SD Memory Card

- Operational compatibility of the SD memory cards manufactured by Mitsubishi Electric (NZ1MEM-□GBSD) with MELSEC iQ-F series CPU modules has been checked. Use of SD memory card other than a Mitsubishi Electric SD memory card may result in loss of the data stored in the SD memory card, or problems such as system stop.
- When mounted in the CPU module, SD memory cards manufactured by Mitsubishi Electric are compliant with IEC 61131-2.
- The SDHC memory card can be used only with devices with an SDHC logo or whose user's manual lists an SDHC logo. Note that SDHC memory cards cannot be used with devices that support only "SD" specifications.
- Turning off or resetting the CPU module or removing the SD memory card while the SD memory card is being accessed may corrupt the data in it. Always turn off or reset the CPU module or remove the SD memory card after disabling access to the SD memory card. With SM606 (SD memory card forced disable instruction) and SM607 (SD memory card forced disable status flag), the SD memory card can be disabled and its usage status can be checked.
- It is recommended that important data be periodically backed up to CD, DVD, or other media.

11.2 Formatting

To use any SD memory card in the CPU module, it must be formatted. In the initial state after purchase, the SD memory card is not formatted. Insert the SD memory card to a CPU module and format the SD memory card using the engineering tool before use. Do not format the SD memory card using the personal computer. (GX Works3 Operating Manual)

MEMO

12 BATTERY PERFORMANCE SPECIFICATIONS

The following shows functional specifications of the battery.
The battery can be connected to the FX5U/FX5UC CPU modules.

Item	FX3U-32BL
Battery type	Lithium manganese dioxide battery
Nominal voltage	3.0V
Life	Standard life: 5 years (at ambient temperature of 25℃)*1

*1 The life of the battery changes with respect to ambient temperature.

12.1 Battery Application

The battery can be used to back up (latch) device memory and clock data.
The battery is not incorporated in the CPU module at shipment from the factory. Order it if necessary.
Parameter setting is required to back up the device memory and clock data.

12.2 Battery Life

When the battery voltage is low, the BAT LED on the panel flashes red while the power is on, and SM51 (SM8006) and SM52 (SM8005) turn on. The memory can be retained for about one month after the LED turns on. However, the drop in battery voltage may not be detected immediately. Prepare a new battery and replace the battery with the new one promptly.

Point

Standard life of the FX3U-32BL: 5 years (at ambient temperature of 25℃)
The life of the battery changes with respect to ambient temperature.
When planning for battery replacement, please estimate the battery life according to the graph below and order replacement batteries in advance.

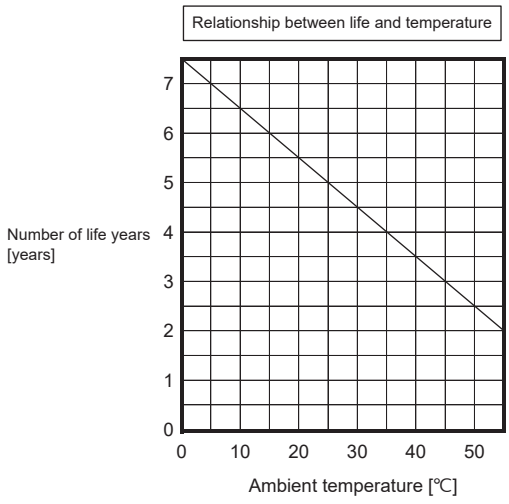

MEMO

13 FUNCTION LIST

The following table lists the functions of the CPU module.

○: Supported, △: Limitedly supported, ×: Not supported

For details, refer to 📖MELSEC iQ-F FX5 User's Manual (Application).

Function		Description	Availability[*1]			
			FX5S	FX5UJ	FX5U	FX5UC
Firmware update function		Updates the module's firmware version.	○	○	○	○
Scan monitoring function (Watchdog timer setting)		Detects errors in the hardware and program of the CPU module by monitoring the scan time.	○	○	○	○
Clock function		This function is used for the time management in the function which the system operates such as the date of the event history function, and data logging function.	○	○	○	○
Online change		Writes the portion edited on the ladder edit window of the engineering tool to the CPU module in increments of ladders. Edited contents spanning multiple portions can be written to the CPU module at once.	○	○	○	○
Interrupt function	Multiple interrupt function	When an interrupt occurs while an interrupt program triggered by another cause is running, stops the program if its priority is lower than that of the new interrupt, and runs the higher-priority program whenever its execution condition is satisfied.	○	○	○	○
	Input interrupt delay function	Execution of an interrupt program can be delayed by the millisecond.	○	○	○	○
PID control function by the instruction		Executes the PID control by the PID instruction.	○	○	○	○
PID control function by the parameter		Executes the PID control (standard PID control or heating and cooling PID control) according to the parameter setting of GX Works3.	○	○	○	○
Constant scan		Keeps the scan time constant and executes program repeatedly.	○	○	○	○
Remote operation		Changes the CPU module status to the RUN/STOP/PAUSE status externally while the RUN/STOP/RESET switch of the CPU module is in RUN status. In addition, resets the CPU module externally while the CPU module is in the STOP status.	○	○	○	○
Device/label memory area setting		Sets the capacity of each area in the device/label memory.	○	×	○	○
Program capacity setting		Set to change program capacity.	×	×	○	○
Internal buffer capacity setting		Sets the capacity of the area (internal buffer) used by the system to temporarily store the results of data logging and memory dump processing.	○	○	○	○
Device initial value setting		Sets the initial values of devices used in the program directly (not via the program) to the devices.	○	○	○	○
Latch function		Holds the contents of the device and label of the CPU module when the power is turned off and on.	○	○	○	○
Memory card function	SD memory card forced stop	Makes the SD memory card unavailable without turning off the power even when the function accessing the SD memory card is executed.	△[*2]	○	○	○
	Boot operation	Transfers the file stored in the SD memory card to the transfer destination memory judged automatically by the CPU module when the power is turned off and on, or the CPU module is reset.	△[*2]	○	○	○
Device/label access service processing setting		Sets the number of execution times of the device/label access service processing executed by END processing, with parameter.	○	○	○	○
Data logging function		Collects data at the specified interval or any desired timing, and stores them as a file on the SD memory card.	△[*2]	○	○	○
Memory dump function		Saves the data in the devices of the CPU module at a desired timing.	△[*2]	○	○	○
Real-time monitor function		Monitors the content of the specified device of the CPU module at a specified interval or at a desired timing in real time.	○	○	○	○

Function		Description	Availability*1			
			FX5S	FX5UJ	FX5U	FX5UC
RAS function	Self-diagnostic function	Checks if a problem exists with the CPU module.	○	○	○	○
	Error clear	Batch-clears all the continuation errors being detected.	○	○	○	○
	Event history function	Collects operations executed and errors detected from the modules, and saves them in the CPU module, expansion board, expansion adapter, and intelligent function module. The saved logs can be checked in chronological order.	○	○	○	○
External input/output forced on/off function		Forcibly turns on or off the external input/output using the engineering tool.	○	○	○	○
Data backup/restoration function		Backs up program files, parameter files, and device/label data files in a CPU module to an SD memory card. The backup data can be restored as needed.	△*2*3	○*3	○	○
High-speed input/output function	High-speed counter function	Performs high-speed counter, pulse width measurement, input interrupt, others by using the input of the CPU module or high-speed pulse input/output module.	○	○	○	○
	Pulse width measurement function					
	Input interrupt function					
	PWM output function	Executes a PWM output by using the transistor output of the CPU module or high-speed pulse input/output module.	△*4	○	○	○
Security function		Protects resources stored in personal computers and resources in the modules in the system of the FX5 from illegal access by a third party such as theft, alteration, accidental operation and unauthorized execution.	○	○	○	○
Positioning function		Executes positioning operation by using the transistor output of the CPU module or high-speed pulse input/output module. For details, refer to the following. MELSEC iQ-F FX5 User's Manual (Application)	○	○	○	○

*1 For some functions, the firmware version and serial number of a CPU module or the version of the engineering tool have restrictions. Refer to "Added and Enhanced Functions" in the following manual.
MELSEC iQ-F FX5 User's Manual (Application)

*2 An SD memory card module, which is sold separately, is required.

*3 Not available in the SFC program execution status.

*4 The high-speed pulse I/O module is not supported.

For details on the following functions, which are not described in 📖MELSEC iQ-F FX5 User's Manual (Application), refer to the manual for each.

Function	Description	Availability*1			
		FX5S	FX5UJ	FX5U	FX5UC
Built-in Ethernet function	An Ethernet related functions such as connection with MELSOFT products and a GOT, socket communications, file transfer function (FTP server, FTP client), Web server (HTTP), SNTP client, and simple CPU communication function. For details, refer to the following. 📖MELSEC iQ-F FX5 User's Manual (Communication)	○	○	○	○
CC-Link IE Field Network Basic function	This function exchanges data between the master station and remote station using general-purpose Ethernet. For details, refer to the following. 📖CC-Link IE Field Network Basic Reference Manual	○	○	○	○
Serial communication function	A function related to the serial communications such as N:N Network, parallel link, MC protocol, inverter communication function and non-protocol communication. For details, refer to the following. 📖MELSEC iQ-F FX5 User's Manual (Communication)	○	○	○	○
MODBUS communication function	Connection with the products which support MODBUS RTU/TCP is available. The master and slave functions can be used. For details, refer to the following. 📖MELSEC iQ-F FX5 User's Manual (Communication)	○	○	○	○
SFC function	Executes programs written in sequential function chart (SFC). For details, refer to the following. 📖MELSEC iQ-F FX5 Programming Manual (Program Design)	○	○	○	○
Built-in analog function	The analog input and analog output are built into the CPU module so that voltage input/voltage output can be performed. For details, refer to the following. 📖MELSEC iQ-F FX5 User's Manual (Application)	×	×	○	×

*1 For some functions, the firmware version and serial number of a CPU module or the version of the engineering tool have restrictions. Refer to "Added and Enhanced Functions" in the following manual.
📖MELSEC iQ-F FX5 User's Manual (Application)

14 INSTALLATION

14.1 Installation Positions

Use the programmable controller under the environmental conditions complying with the general specifications. (☞ Page 83 GENERAL SPECIFICATIONS)

Installation positions in a control panel

To prevent temperature rise, do not mount the programmable controller on the floor or ceiling, or in the vertical direction.
Always mount the programmable controller horizontally on the wall as shown in the following figure.

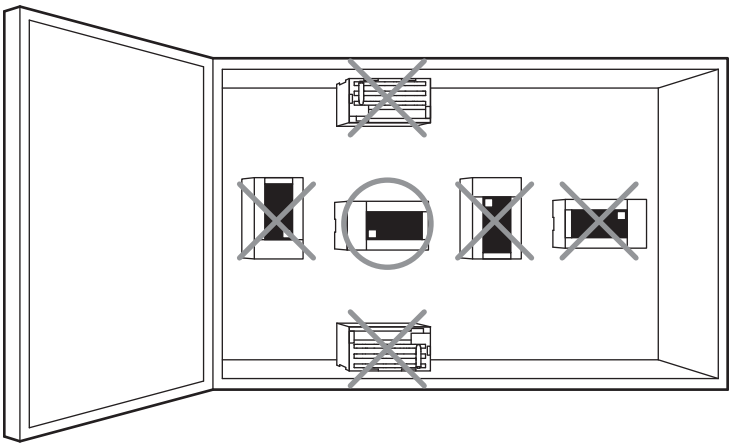

Layout in control panel

The programmable controller components can be laid out in one stage or in two stages (upper and lower).The connecting procedures in each case are explained below.

Extension devices can be connected on the left and right sides of the CPU module of the programmable controller. (For the FX5S CPU module, extension devices can be connected on the left of the CPU module located in the middle.)

Keep a space of at least 50mm between the module main body or other devices and structure.

Also, separate the programmable controller from high-voltage lines, high-voltage devices, and power devices when possible. Failure to do so may cause fire, equipment failures or malfunctions.

When extension devices are intended to add, keep necessary spaces on the left and right sides.

Configuration in 1-stage layout

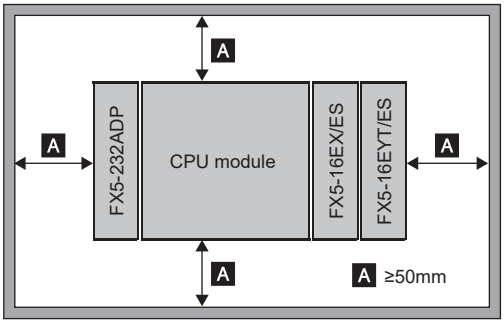

Configuration in 2-stage layout

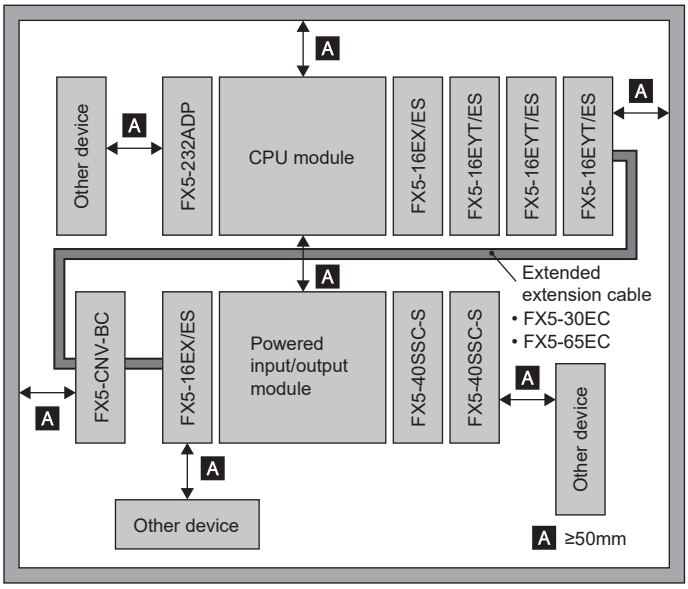

For product dimensions, refer to the external dimensions diagram of each product.

14.2 Installation Methods

This section describes the installation methods.

There are three installation methods as listed in the following table.

Installation methods	FX5S	FX5UJ	FX5U	FX5UC
Installing on DIN rail	○	○	○	○
Installing directly	○	○	○	×
Example of combination of installation on DIN rail and direct installation	○	○	○	○

Point

Keep a space of about 2mm between the products.

Installing on DIN rail

- The programmable controller can be installed on a 35mm wide DIN46277 rail.
- The programmable controller can be easily moved and removed.
- For installation of the programmable controller using a DIN rail in the control panel, additional length of the DIN rail thickness is required.

For details on the procedures for installing on and detaching from a DIN rail, refer to ☞ Page 166 Installing on DIN rail.

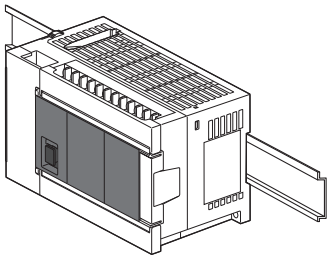

Installing directly

- The programmable controller can be installed directly in the control panel with M4 screws.

For details on installing directly, refer to ☞ Page 167 Installing directly.

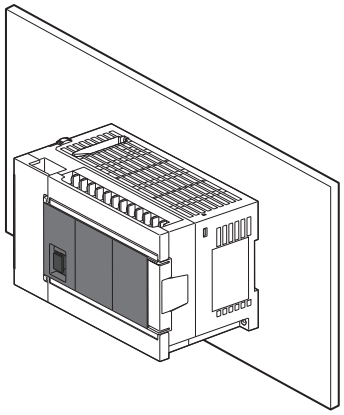

Example of combination of installation on DIN rail and direct installation

- The CPU module side can be installed on the DIN rail, and the extension modules extended by the extended extension cable can be directly installed.
- The programmable controller can be installed on a 35mm wide DIN46277 rail.
- The programmable controller can be easily moved and removed.
- For installation of the programmable controller using a DIN rail in the control panel, additional length of the DIN rail thickness is required.
- The programmable controller can be installed directly in the control panel with M4 screws.

For details on the procedures for installing on and detaching from a DIN rail, refer to ☞ Page 166 Installing on DIN rail.
For details on installing directly, refer to ☞ Page 167 Installing directly.

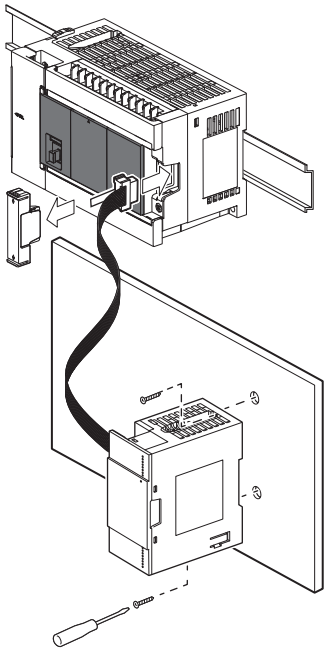

Preparation for installation

Connecting extension devices

Some extension devices must be mounted on the CPU module before the module is installed in the control panel.

- Connect expansion adapters and extension modules (extension connector type) to the CPU module before mounting the module in the control panel.
- Mount extension modules (extension cable type) and terminal block in the enclosure after mounting the CPU module in the control panel.
- Expansion boards can be mounted on the CPU module after it is installed in the control panel.
- The battery of the FX5U CPU module can be replaced without dismounting the CPU module from the control panel. However, when an expansion board is used, the CPU module must be removed.
- Mount (replace) the battery of the FX5UC CPU module before mounting the CPU module.

Affixing the dust proof sheet

The dust proof sheet should be affixed to the ventilation slits before beginning the installation and wiring work.
For the affixing procedure, refer to the instructions on the dust proof sheet.
Always remove the dust proof sheet when the installation and wiring work is completed.

Installing on DIN rail

A module can be installed on a 35mm wide DIN46277 rail.

Installation

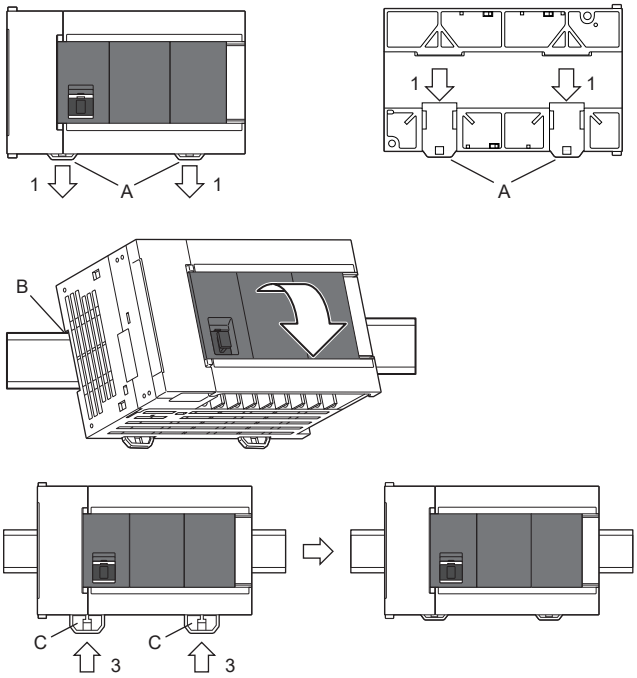

1. Push out all DIN rail mounting hooks (A in the figure).
2. Fit the upper edge of the DIN rail mounting groove (B in the figure) onto the DIN rail.
3. Lock the DIN rail mounting hooks (C in the figure) while pressing the module against the DIN rail.

Removal

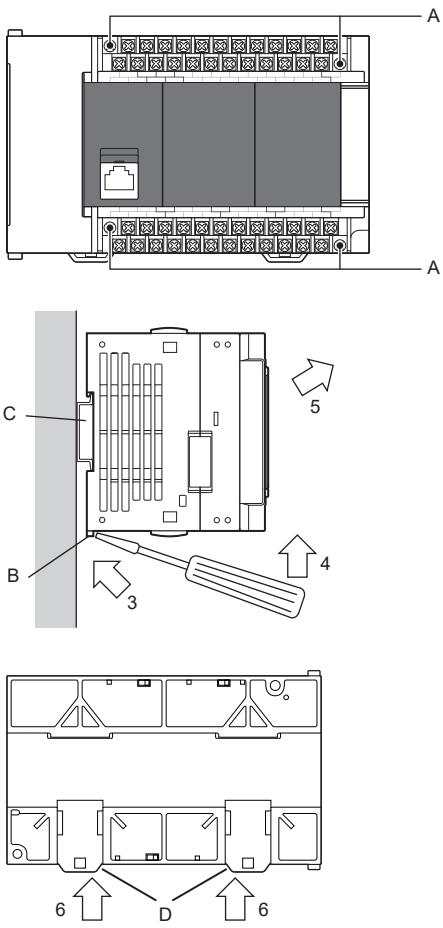

1. Open the terminal block cover, gradually loosen the left and right terminal block mounting screws (A in the figure), and remove the terminal blocks. (The terminal block of the FX5S CPU module cannot be removed.)
2. Disconnect the extension cables and the connecting cables. When removing the extension cable, pull the pullout tab of the extension cable straight up.
3. Insert the tip of a flathead screwdriver into the hole of the DIN rail mounting hook (B in the right figure). This step also applies for the DIN rail mounting hooks of the expansion adapters.
4. Move the flathead screwdriver as shown in the right figure to draw out the DIN rail mounting hooks of all devices.
5. Remove the product from the DIN rail (C in the right figure).
6. Push in the DIN rail mounting hooks (D in the figure).

Installing directly

The module can be installed directly in the control panel.

Mounting hole pitch

Position the holes so that there is a gap of about 2mm between the products.

Ex.

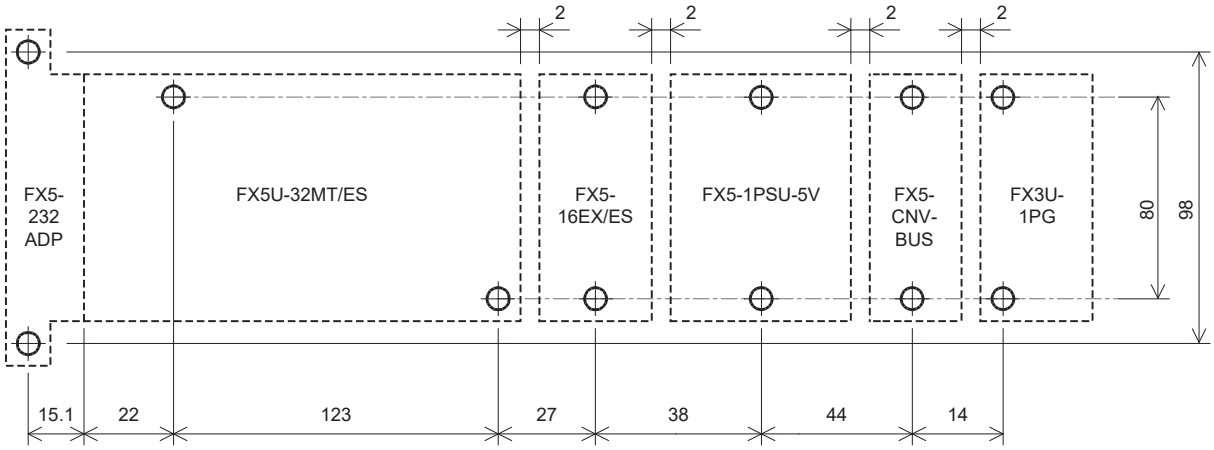

(Unit: mm)

For details on the mounting hole pitches for each module, refer to the external dimensions. (☞ Page 116 External Dimensions)

Installation of CPU module

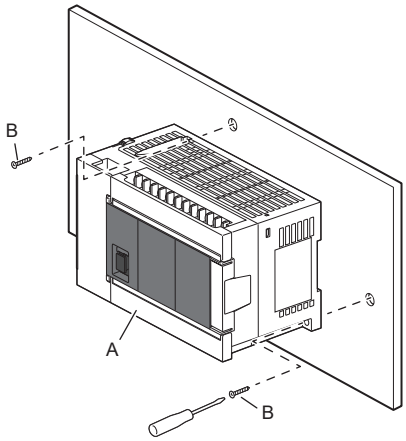

1. Make mounting holes on the mounting surface according to the external dimensions diagram.
2. Align the CPU module (A in the left figure) with the holes, and secure it with M4 screws (B in the left figure). (For the FX5U-64M□/80M□ and FX5S-80M□, there are four screw holes.)

- Tightening torque: 0.83 to 1.11N·m

Installation of extension module (extension cable type)

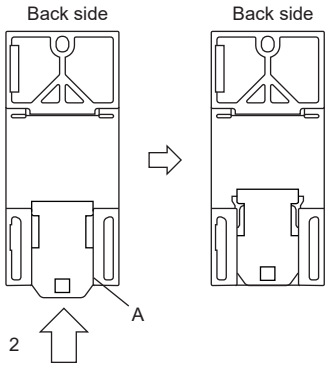

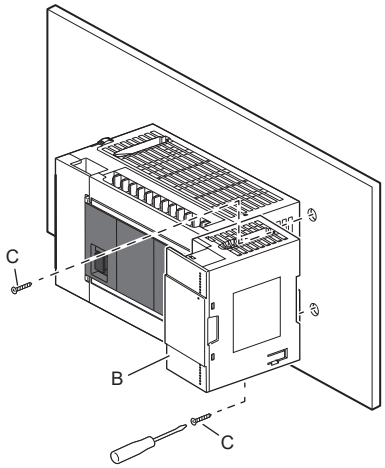

1. Make mounting holes on the mounting surface according to the external dimensions diagram.

2. Push in the DIN rail mounting hook (A in the figure) of the extension module (extension cable type). When the DIN rail mounting hook is not pushed in, the screw hole is covered, and the extension module cannot be mounted. (This procedure may not be required, depending on the model.)

3. Align the extension module (extension cable type) (B in the figure) with the holes, and secure it with M4 screws (C in the figure).

14.3 Method for Connection of Extension Devices

Do not connect extension devices while the power is on. Doing so may cause a memory error.
For details on the memory error and the action to be taken, refer to the following.
MELSEC iQ-F FX5 User's Manual (Application)

Connection of an expansion board (communication board)

FX5S FX5UJ FX5U FX5UC

This section describes how to connect the expansion board (communication board) to the CPU module.

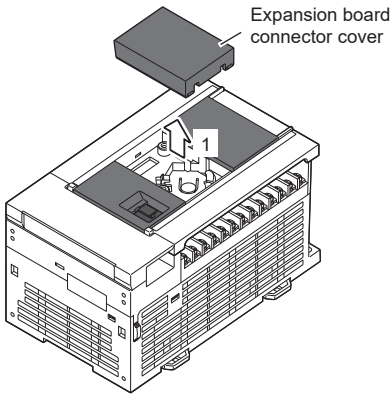

1. Remove the expansion board connector cover from the front face of the CPU module.

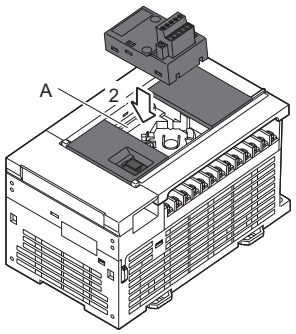

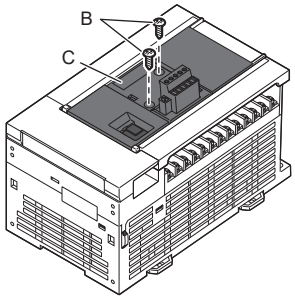

2. Connect the communication board to the expansion board connector (A in the figure).

3. Fix the communication board (C in the figure) with provided M3 tapping screws (B in the figure) to the CPU module.

- Tightening torque: 0.3 to 0.6N·m

Connection of an expansion board (SD memory card module)

FX5S FX5UJ FX5U FX5UC

An SD memory card module can be connected to the FX5S CPU module only.
Do not connect an SD memory card module to a module other than the FX5S CPU module. Otherwise, it may cause damage or malfunction.

Connection of an SD memory card module

This subsection describes how to connect an SD memory card module to the CPU module.

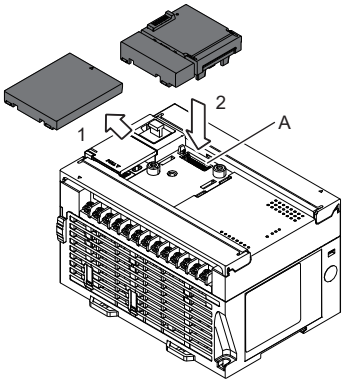

1. Remove the expansion board connector cover from the front face of the CPU module.
2. Connect the SD memory card module to the expansion board connector (A in the figure).

- Before inserting the SD memory card into the SD memory card module, check that the SD memory card stop switch is on the ON side (down).

Connection of an SD memory card module together with a communication board

This subsection describes how to connect an SD memory card module to the CPU module together with a communication board.

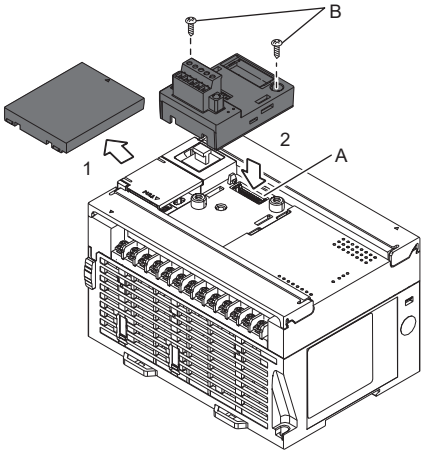

1. Remove the expansion board connector cover from the front face of the CPU module.
2. Connect the communication board to the expansion board connector (A in the figure) and fix it with provided M3 tapping screws (B in the figure) to the CPU module.

- Tightening torque: 0.3 to 0.6N·m

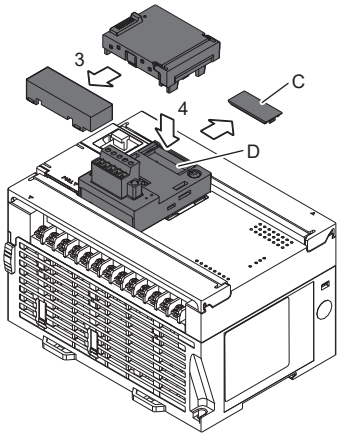

3. Cut off the lower part of the SD memory card module with a tool such as nippers.
4. Remove the communication board connector cover (C in the figure) and connect the SD memory card module to the communication board connector (D in the figure).

Connection of an expansion adapter

FX5S FX5UJ FX5U FX5UC

This subsection describes how to connect the expansion adapter to the CPU module.

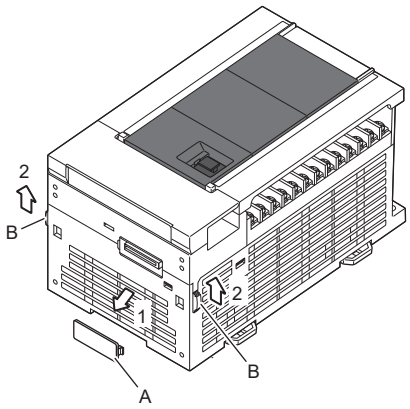

1. Remove the expansion adapter connector cover (A in the right figure).
2. Slide the hook for coupling the expansion adapter of the CPU module (B in the figure).

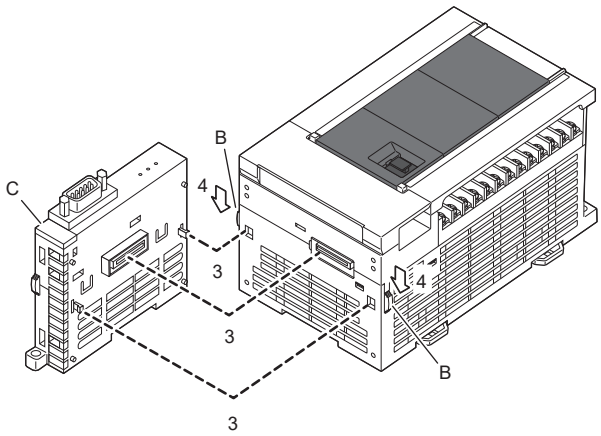

3. Connect the expansion adapter to the CPU module as shown in the figure.
4. Slide the hook for coupling the expansion adapter of the CPU module (B in the figure) to fix the expansion adapter (C in the figure).

Connection of an extension module (extension cable type)

~~FX5S~~ FX5UJ FX5U FX5UC

This subsection describes how to connect an extension module (extension cable type).
A connector conversion module is required to connect an extension cable type module to an FX5UC CPU module system.

Precautions

- Note that the pullout tab of extension cables do not touch the conductive parts of the module.
- When removing the extension cable, pull the pullout tab of the extension cable straight up.

Connection to the CPU module or powered input/output module

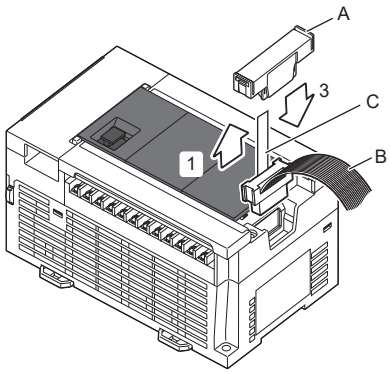

CPU module

1. Remove the extension connector cover (A in the figure) on the right side of the front of the CPU module or powered input/output module.
2. Connect the extension cable (B in the figure) from the extension module (extension cable type) to the extension connector of the CPU module or powered input/output module. Put the pullout tab (C in the figure) of the extension cable inside the extension connector cover.
3. Fit the extension connector cover (A in the figure).

Connection to an extension module (extension cable type)

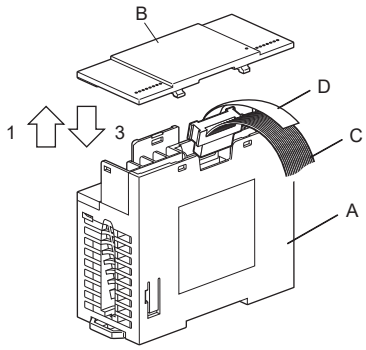

1. Remove the top cover (B in the figure) of the existing module (A in the figure).
2. Connect the extension cable (C in the figure) of the extension module to the existing module (A in the figure).
3. Fit the top cover (B in the figure).
4. Pull out the pullout tab (D in the figure) of the extension cable on the right side of the cover.

Point

Since a connector conversion module (extension connector type) has no top cover, when using the connector conversion module (extension connector perform only step 2.

Some extension modules (extension cable type) are supplied together with an extension cable.
For a module supplied together with an extension cable, connect the extension cable to the extension module as follows.

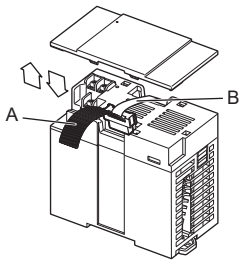

1. Connect the extension cable to the extension connector (for preceding module).
2. Put the pullout tab of the extension cable inside the top cover.

Connection of an extension module (extension connector type)

~~FX5S~~ FX5UJ FX5U FX5UC

This subsection describes how to connect the extension module (extension connector type).
A connector conversion module is required to connect an extension connector type module to an FX5UJ CPU module system and an FX5U CPU module system.

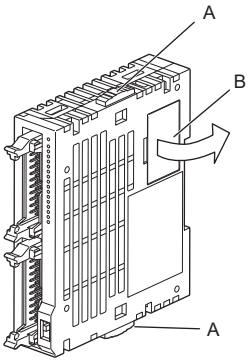

1. Slide the extension module joint levers (A in the figure) of the existing module (left side).
2. Remove the extension connector cover (B in the figure).

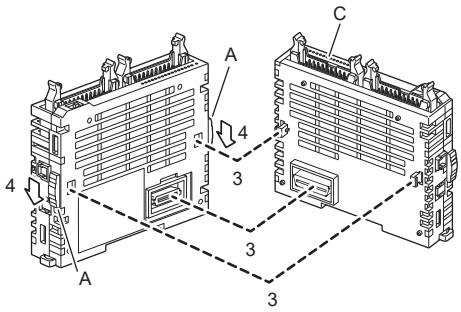

3. Connect the extension module as shown in the left figure.
4. Slide the extension module joint levers (A in the figure) of the existing module to fix the extension module (C in the figure).

Connection of an extended extension cable and connector conversion adapter

FX5S FX5UJ FX5U FX5UC

This subsection describes the procedures for connecting an extended extension cable and the FX5-CNV-BC to the extension cable of the FX5 extension module.

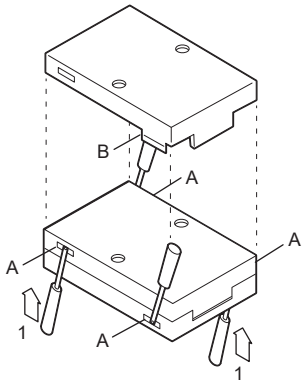

1. Separate the case of the connector conversion adapter into two halves as shown in the figure. To separate the case, use a precision flathead screwdriver. Slightly insert the tip of the screwdriver into part A shown in the figure, and the hook (B in the figure) will come off. (4 points)

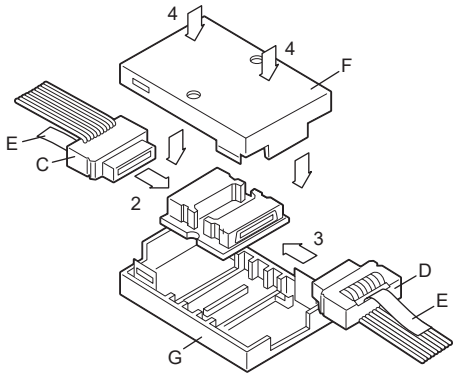

2. Connect the extended extension cable (C in the figure).
3. Connect the extension cable (D in the figure).
4. Arrange the tabs (E in the figure) to be outside the case, align the upper cover (F in the figure) and the lower cover (G in the figure), and press down the upper cover until it is hooked.

Connection of an FX3 extension module

FX5S FX5UJ FX5U FX5UC

The procedure for connecting the FX3 extension module to the bus conversion module is explained below.

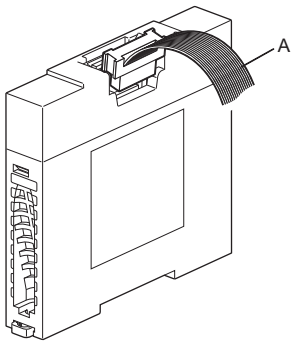

1. Connect the extension cable (A in the figure) from the FX3 extension module to the extension connector of the bus conversion module.

15 WIRING

15.1 Wiring Procedure

Before wiring, turn off the source power supply.

Procedure	Item	Description	Reference
1	Preparation of wiring components	Prepare crimp terminals and cables needed for wiring. In addition, check the terminal processing and cable connecting procedures, such as cable installation and disconnection.	☞ Page 176 Preparation of Wiring Components
2	Power supply wiring	The FX5UC CPU module is connected to the power connectors. For AC power supply type, connect the cables to the power [L] and [N] terminals. For DC power supply type, connect the cables to the power [+] and [-] terminals. Provide the protection circuit described in this chapter for the power supply circuit.	☞ Page 188 AC power supply wiring ☞ Page 190 DC power supply wiring
3	Grounding	Connect ⏚ grounded with a resistance of 100 ohms or less with the terminal.	☞ Page 187 Grounding
4	Input Wiring	Connect sensors and switches to the terminals.	☞ Page 191 Input Wiring
5	Output Wiring	Connect the load to terminals.	☞ Page 207 Output Wiring
6	Built-in analog I/O terminal block wiring	Connect analog I/Os to terminals.	🕮MELSEC iQ-F FX5 User's Manual (Application)
7	Positioning wiring	—	🕮MELSEC iQ-F FX5 User's Manual (Application)
8	Ethernet communication connector wiring	—	🕮MELSEC iQ-F FX5 User's Manual (Communication)
9	Built-in RS-485 communication terminal block wiring	Check the wiring for each function of the serial communications used.	🕮MELSEC iQ-F FX5 User's Manual (Communication)
10	Other wiring	Check the wiring methods described in the manual for the module used for connection.	🕮 User's manual for the module used

15.2 Preparation of Wiring Components

This section describes the wiring components to be prepared.

Power cables

This subsection describes the procedure for connecting power cables for the FX5UC CPU module, extension power supply module, and I/O module.

Power cables

The power must be supplied to the FX5UC CPU module, the FX5-C1PS-5V, the FX5-C□EX/D, and the FX5-C32ET/D.
The power is supplied to the FX5UC CPU module and the FX5-C1PS-5V using cables for the CPU module and extension power supply module.
To supply the power to the FX5-C□EX/D and the FX5-C32ET/D, use two power connectors (upper and lower) on each module for crossover wiring.
The FX5-C□EX/DS(-TS) and the FX5-C32ET/DS□ do not have power connectors. Supply the power to them using input connectors or input terminal blocks.

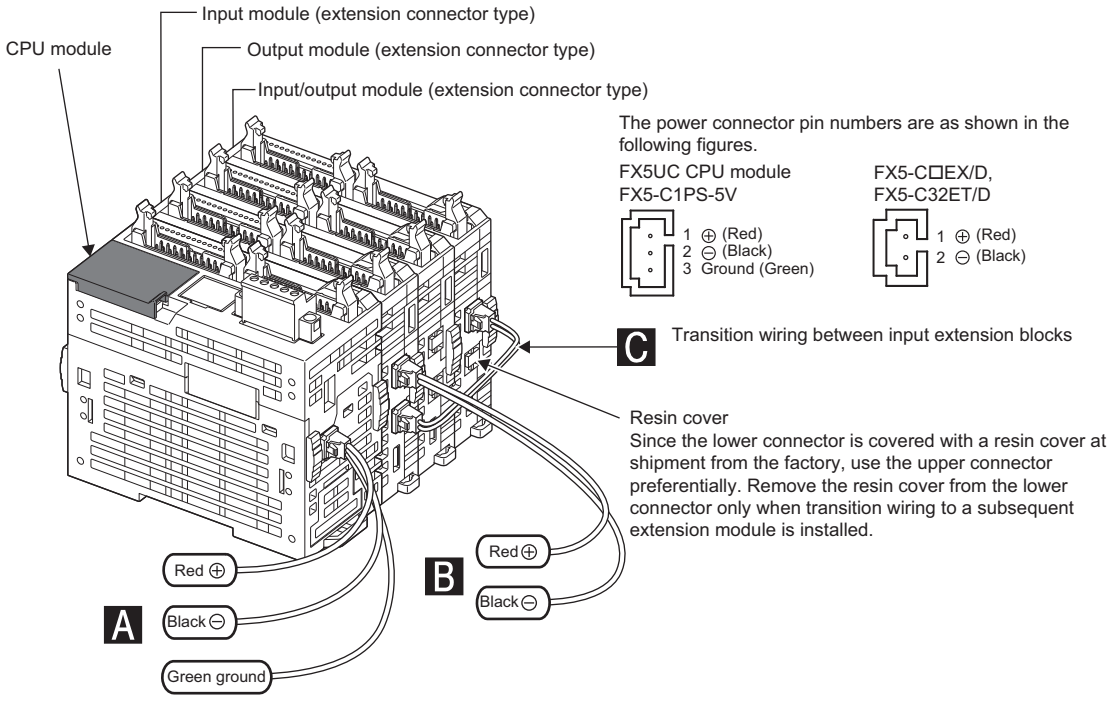

For power cables, use the cables provided with the following products.

Classification	Application	Model	Length	Product provided with power cable
A	Power cable for the FX5UC CPU module and extension power supply module	FX2NC-100MPCB	1m	FX5UC-□MT/D, FX5UC-□MT/DSS, FX5UC-32M□/DS□-TS, FX5-C1PS-5V
B	Power cable for the FX5-C□EX/D and the FX5-C32ET/D	FX2NC-100BPCB*1	1m	FX5UC-□MT/D
C	Power crossover cable for the FX5-C□EX/D and the FX5-C32ET/D	FX2NC-10BPCB1	0.1m	FX5-C□EX/D, FX5-C32ET/D

*1 The FX2NC-100BPCB is not provided with the FX5UC-□MT/DSS or the FX5UC-32M□/DS□-TS.
When adding the FX5-C□EX/D or the FX5-C32ET/D to the FX5UC-□MT/DSS or the FX5UC-32M□/DS□-TS, the FX2NC-100BPCB is required separately.
However, the above does not apply when performing crossover wiring. The user is requested to order if necessary.

• Wiring the FX5-C□EX/D or the FX5-C32ET/D to a subsequent stage

Since the power connectors (two places) on each module of the FX5-C□EX/D and the FX5-C32ET/D are connected in parallel inside the module, they have no difference and can be either an inlet port or outlet port for supplying the power. Thus, cables can be connected to either of the connectors.

However, since the lower connector is covered with a resin cover at shipment from the factory, use the upper connector preferentially. Remove the resin cover only when crossover wiring to a subsequent module is performed.

(The FX5-C□EX/DS(-TS) and the FX5-C32ET/DS□ do not have power connectors, and the power is supplied from input connectors or input terminal blocks. Thus, removing the resin cover is not required.)

Precautions

To perform crossover wiring, supply the power from the preceding module to the subsequent module. The power cannot be supplied from the subsequent module to the preceding module.

Disconnection of the power cable

Hold part "a" on the connecter of the power cable with your fingers, and remove the cable in the direction of the arrow.

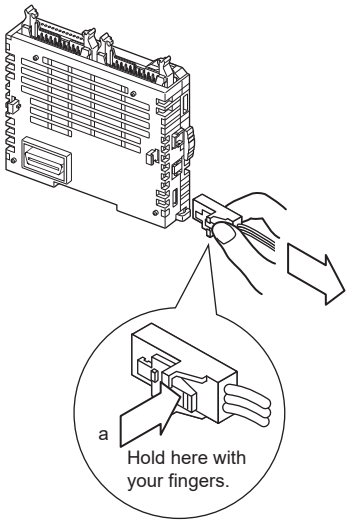

Precautions

When the power cable is removed by force, the cable may break.

Connector

I/O connectors

■Suitable connector (commercially available connector)

Use 20-pin (1-key) sockets conforming to MIL-C-83503.

Check that the sockets do not interfere with peripheral parts including connector covers in advance.

■I/O cables (Mitsubishi Electric option)

I/O cables on which connectors are attached are prepared.

Model	Length	Description	Type
FX-16E-500CAB-S	5m	General-purpose I/O cable	• Single wire (wire color: red) • CPU module side: 20-pin connector is attached.
FX-16E-150CAB	1.5m	Cables for connection of the terminal block and I/O connectors For the connection with the terminal block, refer to ☞ Page 175 WIRING.	• Flat cables (with tube) • On both ends, 20-pin connectors are attached.
FX-16E-300CAB	3m		
FX-16E-500CAB	5m		
FX-16E-150CAB-R	1.5m		• Round multicore cables • On both ends, 20-pin connectors are attached.
FX-16E-300CAB-R	3m		
FX-16E-500CAB-R	5m		

■Connectors for self-making I/O cables (Mitsubishi Electric option)

Prepare wires and crimp tools by users.

Model and configuration of I/O connectors			Suitable wiring (UL-1061-compliant products are recommended) and tool	
Mitsubishi Electric model		Part description (Manufactured by DDK Ltd.)	Wire size	Crimp tool (Manufactured by DDK Ltd.)
FX2C-I/O-CON for flat cables	10 sets	Crimp connector FRC2-A020-30S	28 AWG (0.1mm²) 1.27-pitch 20 cores	357J-4674D main body 357J-4664N attachment
FX2C-I/O-CON-S for single wires	5 sets	Housing HU-200S2-001 Crimp contact HU-411S	22 AWG (0.3mm²)	357J-5538
FX2C-I/O-CON-SA for single wires	5 sets	Housing HU-200S2-001 Crimp contact HU-411SA	20 AWG (0.5mm²)	357J-13963

■Certified connectors (commercially available connectors)

Connectors made by DDK Ltd. shown above

Cable connection to I/O connectors (extension connector type)

■For CPU modules and I/O modules (extension connector type)

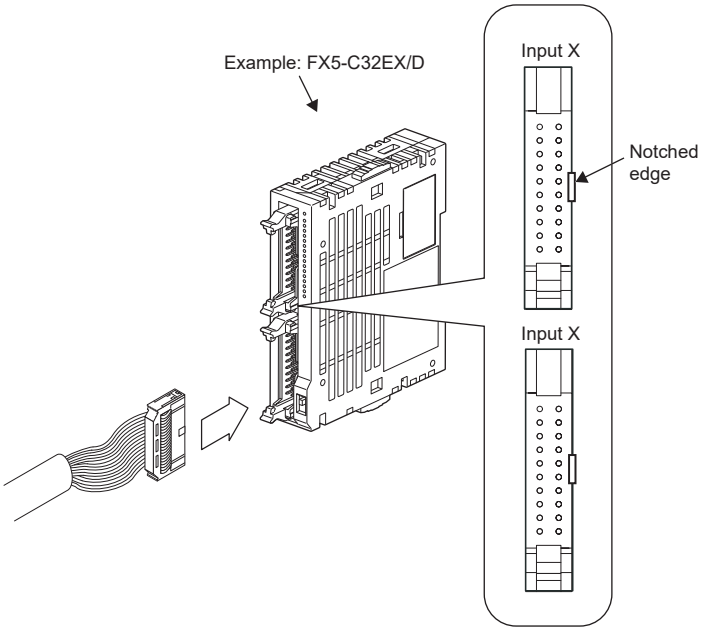

- Terminal layout of the FX-16E-500CAB-S (CPU module and I/O module (extension connector type) side)

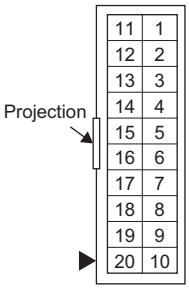

The figure above is the connector pin layout when the cable connector is placed in the same orientation as the connector of the CPU module or I/O module (extension connector type).
The pin numbers assigned to the connector above and the position of the ▲ mark do not match the actual pin layout of the I/O connector of the CPU module or I/O module (extension connector type).
Refer to the following for the terminal layout of the CPU module.
☞ Page 114 I/O connector

■For terminal modules

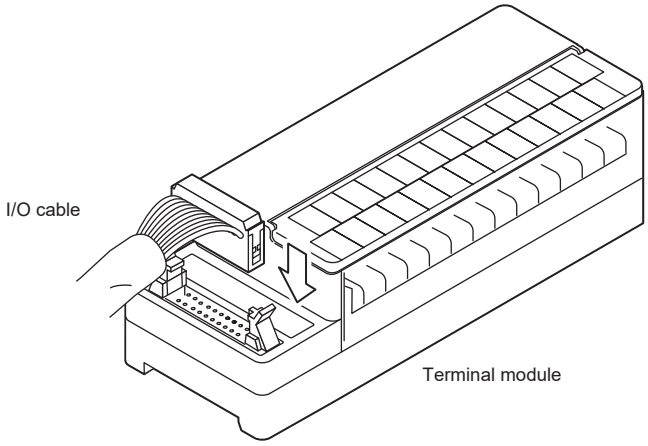

Screw terminal block

Wire the screw terminal block in accordance with the following specifications.

Terminal screw size and tightening torque

Screw location		Screw size	Tightening torque
CPU module	Terminal block screw	M3	0.5 to 0.8N·m
	Terminal block mounting screws	M3	0.4 to 0.5N·m
I/O module	Terminal block screw	M3	0.5 to 0.8N·m
	Terminal block mounting screws	M3	0.4 to 0.5N·m
Extension power supply module		M3	0.5 to 0.8N·m
Terminal block		M3.5	0.5 to 0.8N·m

Precautions

Do not tighten terminal screws with torque beyond the specified range. Doing so may cause failures or malfunctions.

Wire end treatment

Crimp terminal size differs depending on terminal screw size and wiring methods used.

Use crimp terminals of the following sizes.

■M3 terminal screw

• When a single wire is connected to a single terminal

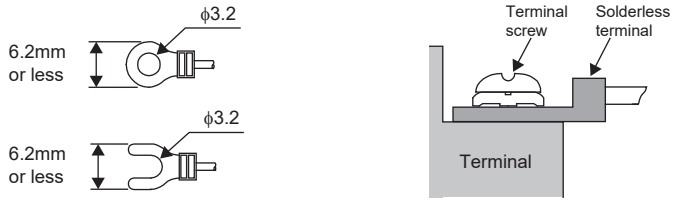

<Reference>

Manufacturer	Model	Suitable wiring	Certification	Crimp tool
JST Mfg. Co., Ltd.	FV1.25-B3A	22 to 16 AWG	UL Listed	YA-1 (JST Mfg. Co., Ltd.)
	FV2-MS3	16 to 14 AWG		

• When two wire are connected to a single terminal*1

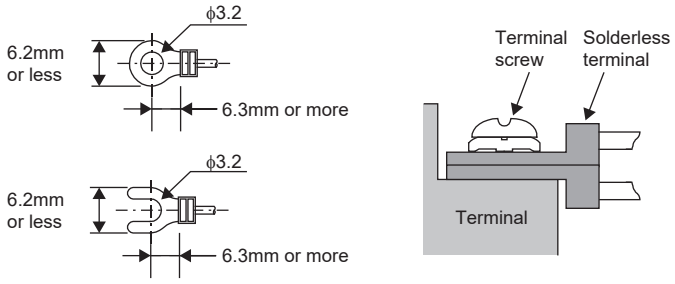

<Reference>

Manufacturer	Model	Suitable wiring	Certification	Crimp tool
JST Mfg. Co., Ltd.	FV1.25-B3A	22 to 16 AWG	UL Listed	YA-1 (JST Mfg. Co., Ltd.)

*1 To adapt the Low Voltage Directive of the EU Directive or UL and cUL standards, avoid wiring with two wires to the built-in terminal, and take an appropriate action such as adding an external terminal.

■M3.5 terminal screw

- When a single wire is connected to a single terminal



- When two wires are connected to a single terminal

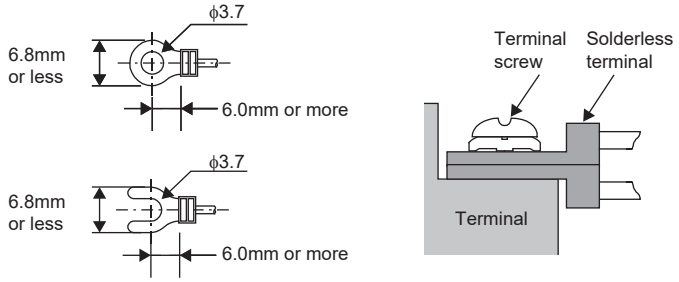

Removal and installation of a detachable terminal block

For the FX5UJ/FX5U CPU module, a terminal block can be removed or attached.

■Removal

Loosen the terminal block mounting screws on the left and right sides uniformly and remove the terminal block.

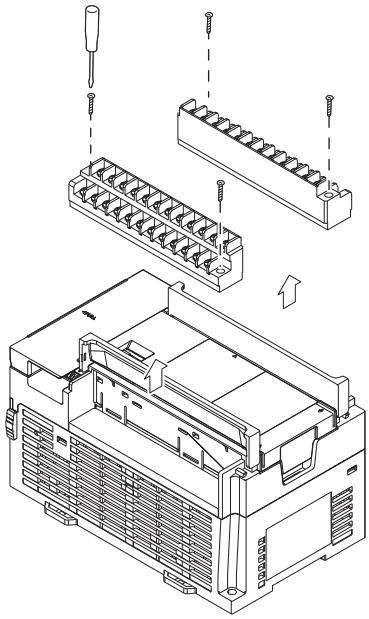

■Installation

Place the terminal block at its predetermined position and tighten the terminal block mounting screws on the left and right sides uniformly.

Note that there is no gap between the terminal block and mount position.

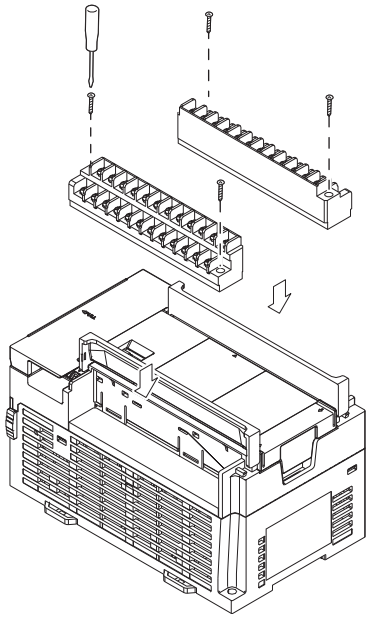

Precautions

Do not tighten the terminal block mounting screws with torque exceeding the specified range. Doing so may cause failures or malfunctions.

European-type terminal block

Wire the European-type terminal block in accordance with the following specifications.

Suitable wiring

Product	Number of wires connected per terminal	Wire size		Tightening torque
		Solid wire, Stranded wire	Wire ferrule with insulation sleeve	
Built-in analog I/O terminal block Terminal block for built-in RS-485 communications (FX5U CPU module)	One wire	0.2 to 0.5mm² (24 to 20 AWG)	0.2 to 0.5mm² (24 to 20 AWG)	0.22 to 0.25N·m
	Two wires	0.2mm² (24 AWG)	—	
Terminal block for built-in RS-485 communications (FX5UC CPU module) Expansion board, communication adapter	One wire	0.3 to 0.5mm² (22 to 20 AWG)	0.3 to 0.5mm² (22 to 20 AWG)	
	Two wires	0.3mm² (22 AWG)	—	
Analog adapter	One wire	0.3 to 0.5mm² (22 to 20 AWG)	0.3 to 0.5mm² (22 to 20 AWG)	0.20 N·m
	Two wires	0.3mm² (22 AWG)	—	

Precautions

Do not tighten terminal screws with torque beyond the specified range. Doing so may cause failures or malfunctions.

Wire end treatment

Treat stranded and solid wires as they are or use wire ferrules with insulation sleeves for wiring terminals.

■When stranded and solid wires are treated as they are

- Twist the end of stranded wires, and make sure that there are no loose wires.
- Do not solder-plate the electric wire ends.

Stripping dimensions of electric wire ends	
Built-in analog I/O terminal block, built-in RS-485 communication terminal block	**Expansion board, expansion adapter**
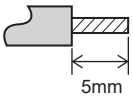	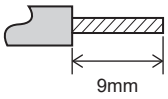

■When wire ferrules with insulation sleeves are used

Depending on the thickness of a wiring sheath used, inserting the sheath into an insulation sleeve may be difficult. Refer to the external dimensions as a reference to select wires.

Built-in analog I/O terminal block, built-in RS-485 communication terminal block	**Expansion board, expansion adapter**
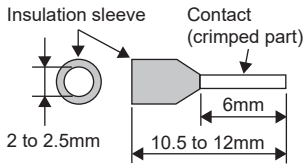	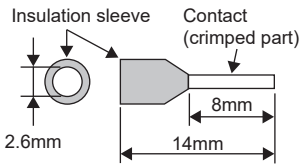

<Reference>

Product	Manufacturer	Model	Crimp tool
Built-in analog I/O terminal block Terminal block for built-in RS-485 communications	Phoenix Contact GmbH & Co. KG	AI 0.5-6 WH	CRIMPFOX 6 CRIMPFOX 6T-F
Expansion board, expansion adapter		AI 0.5-8 WH	

■Tool

For tightening terminals, use a small screwdriver with a straight tip that is not widened toward the end as shown below.

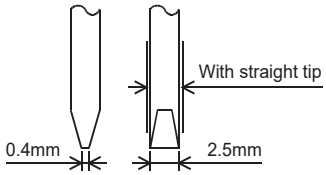

Precautions

When a precision screwdriver with a small grip is used, the specified tightening torque cannot be obtained. Use the following screwdriver or equivalent product (grip diameter: 25mm) to obtain the tightening torque specified above.

<Reference>

Manufacturer	Model
Phoenix Contact GmbH & Co. KG	SZS 0.4×2.5

Spring clamp terminal block

Wire the spring clamp terminal block in accordance with the following specifications.
For information regarding spring clamp terminal blocks for intelligent function modules and FX5 safety extension modules, refer to the user's manuals for each module.

Suitable wiring

The wires to connect the spring clamp terminal block are described below.

Number of wires connected per terminal	Wire size		
	Solid wire, Stranded wire	Wire ferrule with insulation sleeve	Ferrules without insulation sleeve
One wire	24 to 16 AWG (0.2 to 1.5mm²)	23 to 19 AWG (0.25 to 0.75mm²)	23 to 16 AWG (0.25 to 1.5mm²)

Wire end treatment

When not using a ferrule, strip the cable about 10mm from the tip. When connecting with stranded wires, make sure the wires do not separate.
When using a ferrule, strip the cable about 10mm from the tip to connect a wire ferrule at the stripped area. Failure to do so may result in electric shock or short circuit between adjacent terminals because of the conductive part. If the wire strip length is too short, it may result in the unstable connection to the spring clamp terminal part.
Depending on the thickness of a wiring sheath used, inserting the sheath into an insulation sleeve may be difficult. Refer to the external dimensions as a reference to select wires.

Strand wire/single wire	Wire ferrule with insulation sleeve
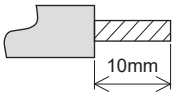	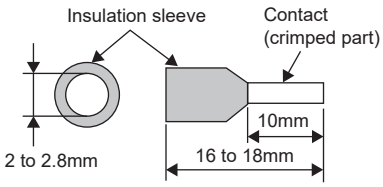

The following table lists wire ferrules and tools used for removing this part compatible with the terminal block. Use of items that are not listed in the following table may result in wire ferrule getting stuck to the terminals. Before use, carefully check that the wire ferrule can be removed.
<Reference product>

Manufacturer	Model	Wire size	Crimp tool
Phoenix Contact GmbH & Co. KG	AI 0.5-10 WH	0.5mm²	CRIMPFOX 6
	AI 0.75-10 GY	0.75mm²	
	A 1.0-10	1.0mm²	
	A 1.5-10	1.5mm²	

Removing and installing the terminal block

Follow the below procedures to remove and install the terminal block.

■Lever position to lock and release

A 3-step stopper is attached to prevent the lever from rotating, facilitating installation and removal of the terminal block.
When removing or installing the terminal block, move the lever to the corresponding position.

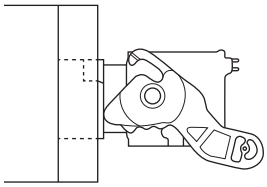

Lever position to release

■Lever position to release
The figure left shows the lever position when the terminal block has been completely removed from the module. Rotate the lever from the lock position to the release position, and lift the terminal block from the module.

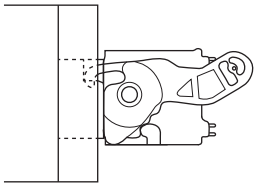

Lever position to lock

■Lever position to lock
The figure left shows the lever position when the terminal block is completely engaged with the module. Check that the lever is at the lock position, and pull the terminal block slightly to check that the module and terminal block are completely engaged.

■Removal procedure

Rotate the lever to the release position, and remove the terminal block from the module.

■Installation procedure

Move the lever to the release position, and insert the terminal block. When the terminal block is inserted sufficiently, the lever latch engages with the module and the terminal block is engaged with the module.

Point

Insert the flathead screwdriver having a tip width of 2.0 to 2.5mm into the groove of the lever, push up the flathead screwdriver, and rotate the lever to the release position, and the terminal block can be removed from the module easily.

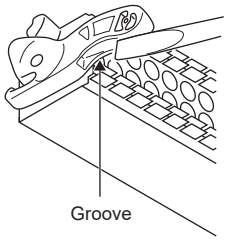

After inserting the terminal block, check that the lever is at the lock position.

Precautions

When installing the terminal block, check that the lever is in the release position. If installation is performed while the lever is in the lock position, it may cause damage to the lever.

Connection and disconnection of the cable

Spring clamp terminal block is the push-in type, therefore, wiring without a tool is possible by simply inserting the connecting terminal to the terminal block.
However, the push-in type does not support stranded wire, and a tool is required for connecting cables.

■Connection of the cable

Fully insert a cable or bar solderless, terminal whose end has been properly processed, into the wire insertion opening.
If the cable or bar solderless terminal cannot be inserted with this procedure, fully insert the cable or bar solderless terminal while pushing the open/close button with a flathead screwdriver having a tip width of 2.0 to 2.5mm. After fully inserting the cable or bar solderless terminal, remove the screwdriver.

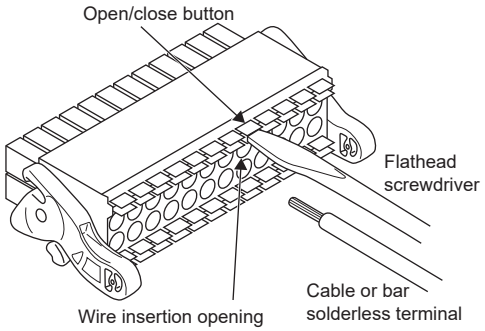

<Reference>

Manufacturer	Model
PHOENIX·CONTACT GmbH & Co. KG	SZS 0.4 × 2.5 VDE

Precautions

- Pull the cable or bar solderless terminal slightly to check that the cable is securely clamped.
- When wiring with the thick electric wire, make sure to prevent the conductive parts from protruding to the front of the terminal block.

■Disconnection of the cable

While pushing the open/close button with a flathead screwdriver having a tip width of 2.0 to 2.5mm, disconnect the cable or bar solderless terminal.

15.3 Grounding

Perform the following.

- Provide a ground resistance of 100Ω or less.
- Ground the programmable controller independently when possible.
- If the programmable controller cannot be grounded independently, perform the "shared grounding" shown below.

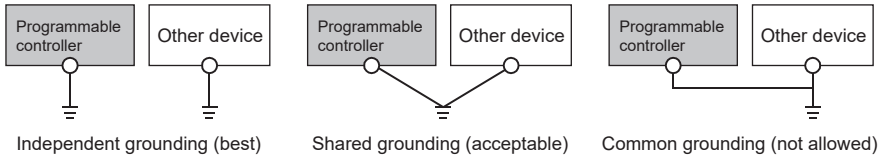

Independent grounding (best) Shared grounding (acceptable) Common grounding (not allowed)

Programmable controller extension devices (excluding expansion boards and communication adapters)

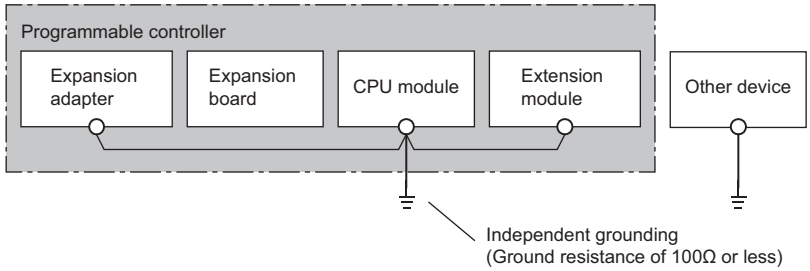

- Use the ground wire shown below. For the FX5UC CPU module, and for the analog adapter and extension module that are supplied together with a power cable, use the accessory ground wire.

Product	Wire size
FX5S/FX5UJ/FX5U CPU module	14 AWG (2mm²) or thicker
Analog adapter	22 to 20 AWG (0.3 to 0.5mm²)

- Bring the grounding point close to the programmable controller as much as possible so that the ground cable can be shortened.

15.4 Power Supply Wiring

AC power supply wiring

- Connect the AC power supply to the [L] and [N] terminals (common for 100VAC system and 200VAC system).
- Note that the power of the powered input/output module is turned on at the same time as the CPU module or earlier than the CPU module.
- Some expansion adapter and intelligent function modules may not have power supply terminals.
  When using an external power supply, turn on the power supply at the same time as the CPU module or earlier than the CPU module. When turning off the power, check the safety of the system and turn off the power of the programmable controller (including extension devices) at the same time.
- Do not connect the [24V] terminals (24VDC service power supply) of the CPU module and the powered input/output module with each other. Connect the [0V] terminal.
- When using an extension power supply module, pull out the power cable and ground wire above the product as shown below.

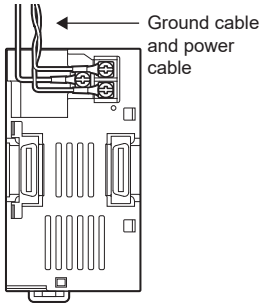

Point

When using a safety extension module, power on all the modules at the same time.
If all the modules cannot be powered on simultaneously, power them on in the following order: the modules other than the safety extension module/CPU module*1, CPU module, and safety extension module.
When the above condition is not satisfied, an error (error code: 3052H) may occur in the safety extension module.
For details on wiring, refer to the following.
MELSEC iQ-F FX5 Safety Extension Module User's Manual

*1 The "modules other than the safety extension module/CPU module" are as follows.
Powered input/output module, extension power supply module, expansion adapter, and intelligent function module

Wiring example

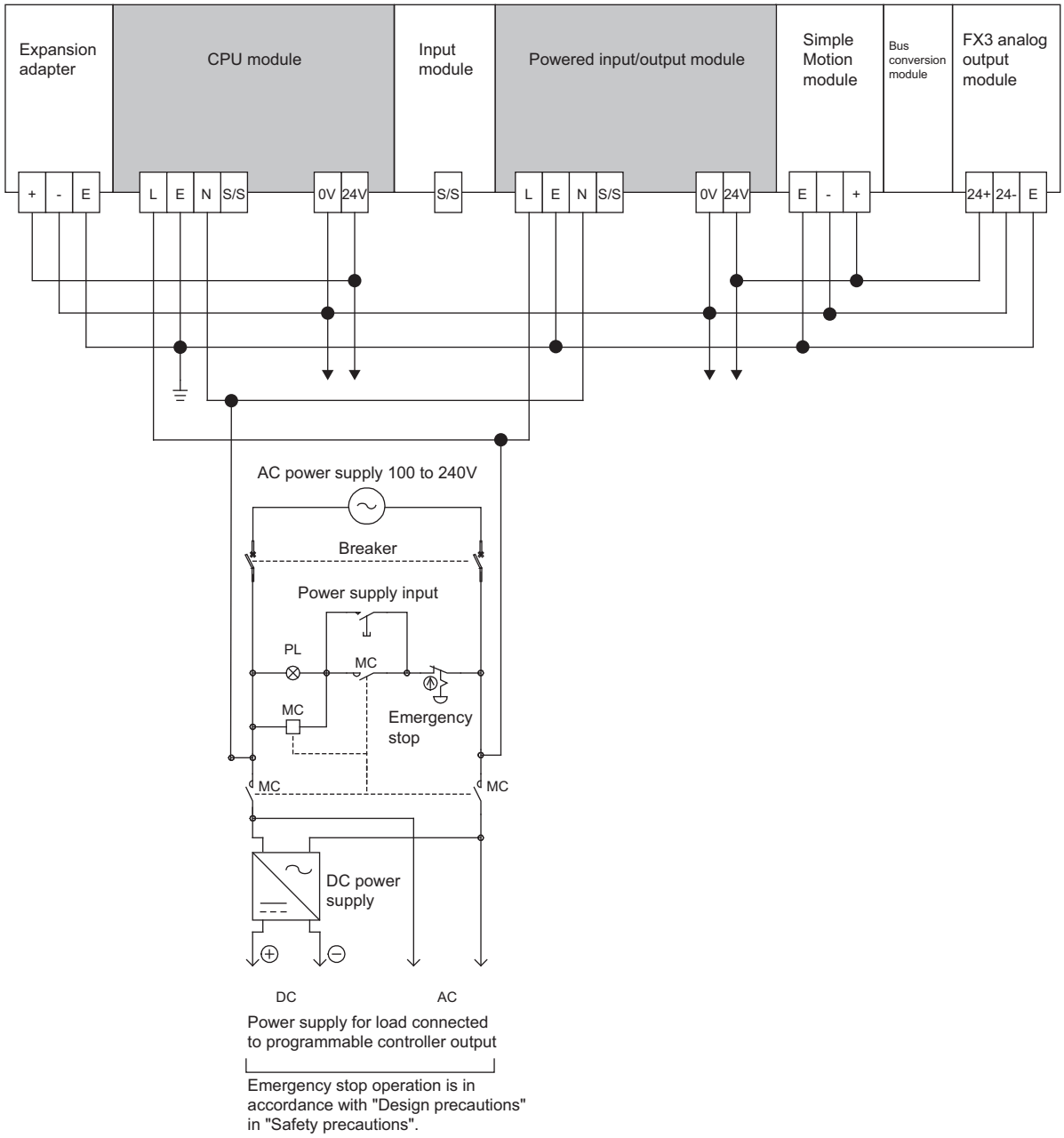

For details on sink/source wiring, refer to the following.

☞ Page 191 Input Wiring

DC power supply wiring

- Connect the DC power supply to the [+] and [-] terminals.
- Note that the power of the powered input/output module is turned on at the same time as the CPU module or earlier than the CPU module.
- Some expansion adapter and intelligent function modules may not have power supply terminals.
  When using an external power supply, turn on the power supply at the same time as the CPU module or earlier than the CPU module. When turning off the power, check the safety of the system and turn off the power of the programmable controller (including extension devices) at the same time.

Point

When using a safety extension module, power on all the modules at the same time.
If all the modules cannot be powered on simultaneously, power them on in the following order: the modules other than the safety extension module/CPU module*1, CPU module, and safety extension module.
When the above condition is not satisfied, an error (error code: 3052H) may occur in the safety extension module.
For details on wiring, refer to the following.
MELSEC iQ-F FX5 Safety Extension Module User's Manual

*1 The "modules other than the safety extension module/CPU module" are as follows.
Powered input/output module, extension power supply module, expansion adapter, and intelligent function module

Wiring example

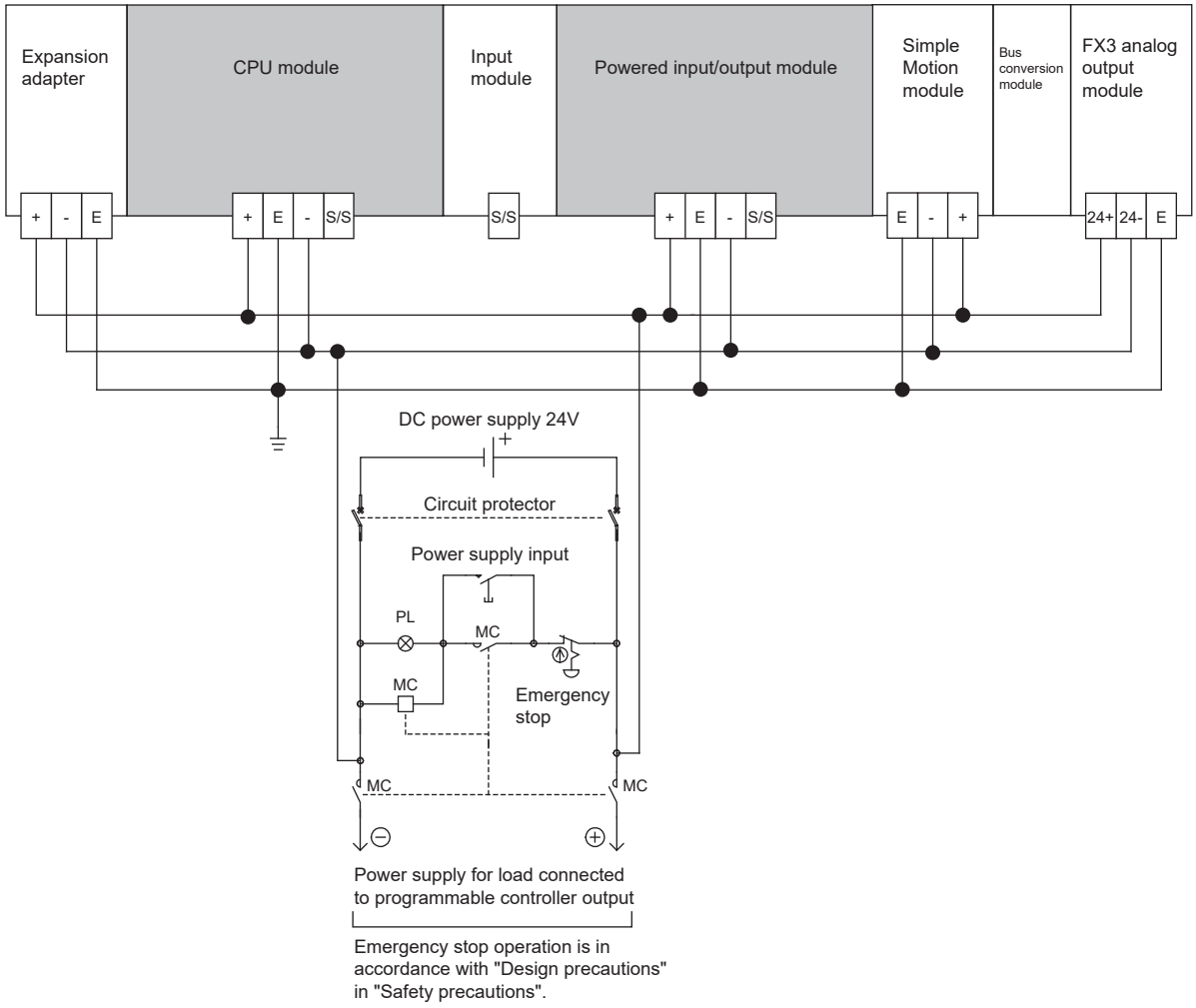

For details on sink/source wiring, refer to the following.
Page 191 Input Wiring

15.5 Input Wiring

This section describes the input wiring of the CPU module, I/O modules, and terminal block.

24VDC input (Sink and source input type)

Sink and source input

■Differences between the sink input circuit and the source input circuit

Input circuit	Description
Sink input [-common]	Sink input means a DC input signal with current-flow from the input (X) terminal. When a device such as a transistor output type sensor is connected, NPN open collector transistor output can be used.
Source input [+common]	Source input means a DC input signal with current-flow into the input (X) terminal. When a device such as a transistor output type sensor is connected, PNP open collector transistor output can be used.

The following figures show ladder examples.

Sink input [-common]	Source input [+common]
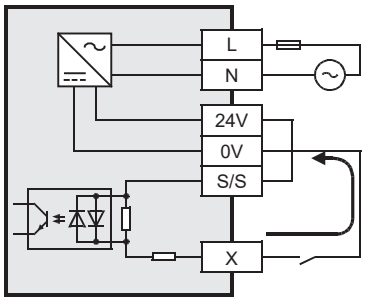	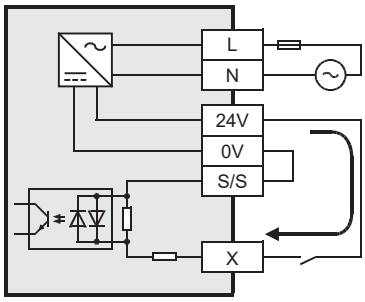

Handling of 24VDC input

■Input terminal

- For the FX5S CPU module, FX5UJ CPU module, FX5U CPU module, input module (extension cable type), input/output module (extension cable type), powered input/output module, and high-speed pulse input/output module

Sink input	Source input
When a no-voltage contact or NPN open collector transistor output is connected between an input (X) terminal and the [0V] terminal and the circuit is closed, the input (X) turns on. The input display LED turns on.	When a no-voltage contact or PNP open collector transistor output is connected between an input (X) terminal and the [24V] terminal and the circuit is closed, the input (X) turns on. The input display LED turns on.
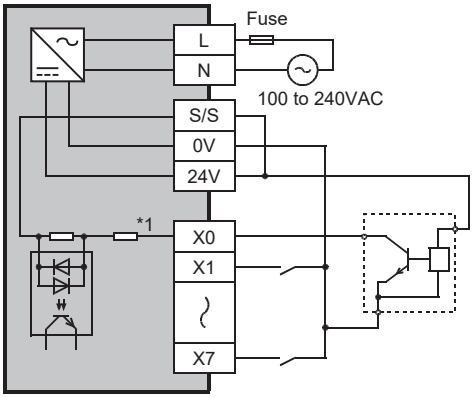	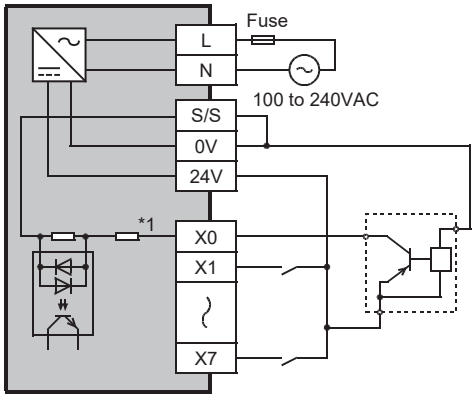

*1 Input impedance

- For the FX5UC CPU module, input module (extension connector type), and I/O module (extension connector type)

Sink-input-dedicated type	Sink/source-input-common type	
	Sink input	Source input
When a no-voltage contact or NPN open collector transistor output is connected between an input (X) terminal and the [COM] terminal and the circuit is closed, the input (X) turns on. At this time, an LED corresponding to the DISP switch lights up. (FX5-C16EX/D does not have the DISP switch.)	In the sink input, the input (X) is turned on by connecting 24VDC [+] with the [COM] terminal or [S/S] terminal, and connecting a no-voltage contact or NPN open collector transistor output between the input terminal and 24VDC to close the circuit. At this time, the input display LED turns on. For the module with the DISP switch, an LED corresponding to the DISP switch turns on.	In the source input, the input (X) is turned on by connecting 24VDC [-] with the [COM] terminal or [S/S] terminal, and connecting a no-voltage contact or PNP open collector transistor output between the input terminal and 24VDC to close the circuit. At this time, the input display LED turns on. For the module with the DISP switch, an LED corresponding to the DISP switch turns on.
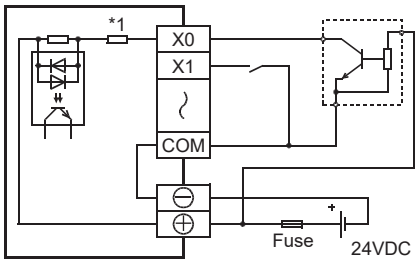	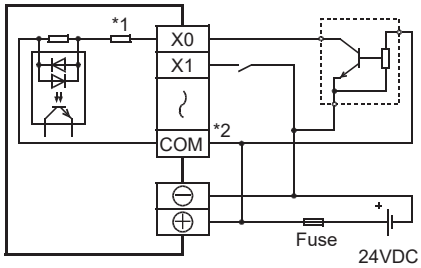	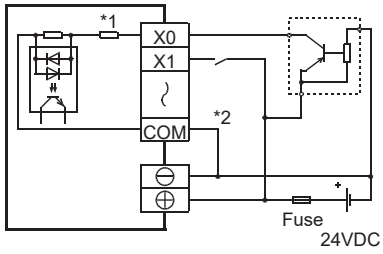

*1 Input impedance

*2 Connected to the [S/S] terminal instead of the [COM] terminal depending on the module

- RUN terminal setting

X0 to X17 of the CPU module can be used as RUN contact terminals by setting parameters.

For details, refer to the following.

MELSEC iQ-F FX5 User's Manual (Application)

■Input circuit

• Function of input circuit

The primary and secondary circuits for input are insulated with a photocoupler, and the second circuit is provided with a C-R filter.

The C-R filter is designed to prevent malfunctions caused by chattering of the input contact and noise from the input line.

Input has a response delay when switching from on to off and off to on

CPU module: ☞ Page 91 Input Specifications

I/O module: ☞ Page 122 Input Module

• Change of filter time

All input circuits have digital filters, and input response time can be added by setting parameters.

When using this product in an environment with much noise, set the digital filter. (☞ Page 91 Input Specifications)

■Input sensitivity

For details on input signal current and input sensitivity current, refer to the input specifications.

• CPU module: ☞ Page 91 Input Specifications

• I/O module: ☞ Page 122 Input Module

■Display of operation

The LED turns on when the photocoupler is driven.

For a module with the DISP switch, the LED target is switched with the DISP switch.

Wiring precautions

■No-voltage contact

Use input devices appropriate for low electric current.

When no-voltage contacts for large current (switches) are used, contact failure may occur.

■Input device with built-in series diode

The voltage drop of the series diode should be the following value or less.

Also note that the input current is over the input-sensing level while the switches are on.

Module			Voltage drop
FX5S CPU module FX5UJ CPU module		X0, X1, X3, X4	3.9V
		X2, X5, X6, X7	4.1V
		X10 or later	2.4V
FX5U CPU module	FX5U-32M□	X0 to X5	3.9V
		X6 to X17	4.1V
	FX5U-64M□, FX5U-80M□	X0 to X7	3.9V
		X10 to X17	4.1V
		X20 or later	2.4V
FX5UC CPU module	FX5UC-32M□/□	X0 to X5	3.9V
		X6 to X17	4.1V
	FX5UC-64T/M□, FX5UC-96T/M□	X0 to X7	3.9V
		X10 to X17	4.1V
		X20 or later	2.4V
High-speed pulse input/output module		X0 to X5	3.9V
		X6, X7	4.1V
Input module			2.4V
I/O module			2.4V
Powered input/output module			2.4V

■Input device with built-in parallel resistance

Use a device having a parallel resistance Rp (kΩ) of the following value or more.

Module			Parallel resistance Rp	Bleeder resistance Rb
FX5S CPU module FX5UJ CPU module		X0, X1, X3, X4	14kΩ or more	5Rp / (14 - Rp)kΩ or less
		X2, X5, X6, X7	15kΩ or more	4Rp / (15 - Rp)kΩ or less
		X10 or later	13kΩ or more	6Rp / (13 - Rp)kΩ or less
FX5U CPU module	FX5U-32M□	X0 to X5	14kΩ or more	5Rp / (14 - Rp)kΩ or less
		X6 to X17	15kΩ or more	4Rp / (15 - Rp)kΩ or less
	FX5U-64M□, FX5U-80M□	X0 to X7	14kΩ or more	5Rp / (14 - Rp)kΩ or less
		X10 to X17	15kΩ or more	4Rp / (15 - Rp)kΩ or less
		X20 or later	13kΩ or more	6Rp / (13 - Rp)kΩ or less
FX5UC CPU module	FX5UC-32M□/□	X0 to X5	14kΩ or more	5Rp / (14 - Rp)kΩ or less
		X6 to X17	15kΩ or more	4Rp / (15 - Rp)kΩ or less
	FX5UC-64T/M□, FX5UC-96T/M□	X0 to X7	14kΩ or more	5Rp / (14 - Rp)kΩ or less
		X10 to X17	15kΩ or more	4Rp / (15 - Rp)kΩ or less
		X20 or later	13kΩ or more	6Rp / (13 - Rp)kΩ or less
High-speed pulse input/output module		X0 to X5	14kΩ or more	5Rp / (14 - Rp)kΩ or less
		X6, X7	15kΩ or more	4Rp / (15 - Rp)kΩ or less
Input module			13kΩ or more	6Rp / (13 - Rp)kΩ or less
I/O module			13kΩ or more	6Rp / (13 - Rp)kΩ or less
Powered input/output module			13kΩ or more	6Rp / (13 - Rp)kΩ or less

When the resistance is less than the above parallel resistance Rp (kΩ), connect a bleeder resistance Rb (kΩ) obtained by the formulas in the above table, as shown in the following figure.

<table>
<tr><th rowspan="2">Module</th><th colspan="2">Wiring example</th></tr>
<tr><th>Sink input [-common]</th><th>Source input [+common]</th></tr>
<tr><td>FX5S CPU module
FX5UJ CPU module
FX5U CPU module</td><td>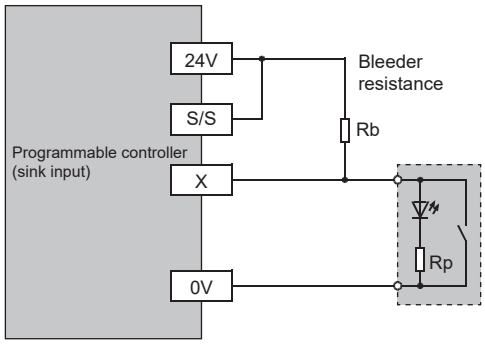
</td><td>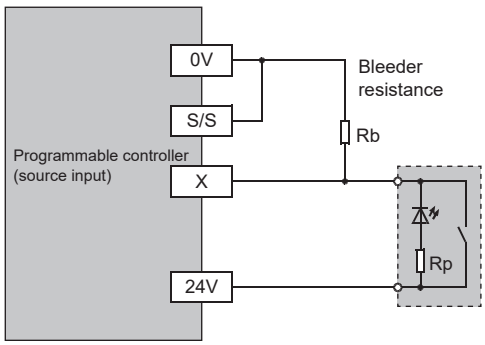
</td></tr>
<tr><td>FX5UC CPU module</td><td>• Example of the FX5UC-32MT/DSS
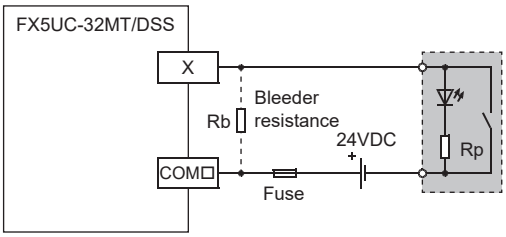

• Example of the FX5UC-32MT/D
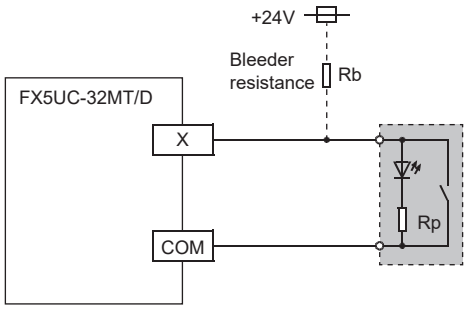
</td><td>• Example of the FX5UC-32MT/DSS
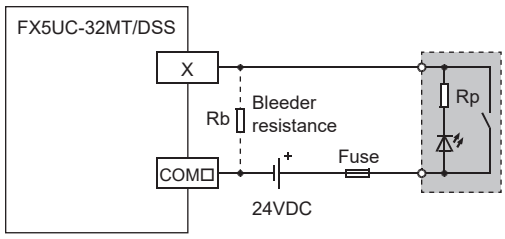
</td></tr>
</table>

■Two-wire proximity switch

Use a two-wire proximity switch whose leakage current, Iℓ is 1.5mA or less when the switch is off.

When the leakage current Iℓ is larger than 1.5mA, connect a bleeder resistance Rb (kΩ) obtained by the following formula as shown in the following figure.

Module			Bleeder resistance Rb
FX5S CPU module FX5UJ CPU module		X0 to X7	7 / (Iℓ - 1.5)kΩ or less
		X10 or later	9 / (Iℓ - 1.5)kΩ or less
FX5U CPU module	FX5U-32	X0 to X5	7 / (Iℓ - 1.5)kΩ or less
		X6 to X17	7 / (Iℓ - 1.5)kΩ or less
	FX5U-64 FX5U-80	X0 to X7	7 / (Iℓ - 1.5)kΩ or less
		X10 to X17	7 / (Iℓ - 1.5)kΩ or less
		X20 or later	9 / (Iℓ - 1.5)kΩ or less
FX5UC CPU module	FX5UC-32	X0 to X5	7 / (Iℓ - 1.5)kΩ or less
		X6 to X17	7 / (Iℓ - 1.5)kΩ or less
	FX5UC-64 FX5UC-96	X0 to X7	7 / (Iℓ - 1.5)kΩ or less
		X10 to X17	7 / (Iℓ - 1.5)kΩ or less
		X20 or later	9 / (Iℓ - 1.5)kΩ or less
High-speed pulse input/output module			7 / (Iℓ - 1.5)kΩ or less
Input module			9 / (Iℓ - 1.5)kΩ or less
I/O module			9 / (Iℓ - 1.5)kΩ or less
Powered input/output module			9 / (Iℓ - 1.5)kΩ or less

Module	Wiring example	
	Sink input [-common]	Source input [+common]
FX5S CPU module FX5UJ CPU module FX5U CPU module	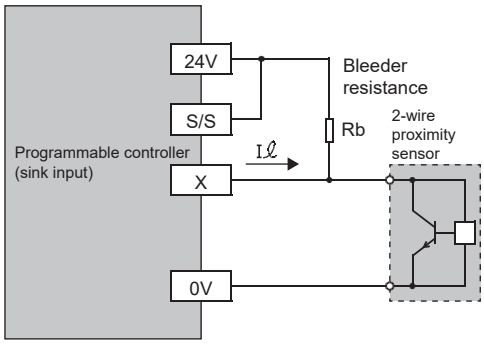	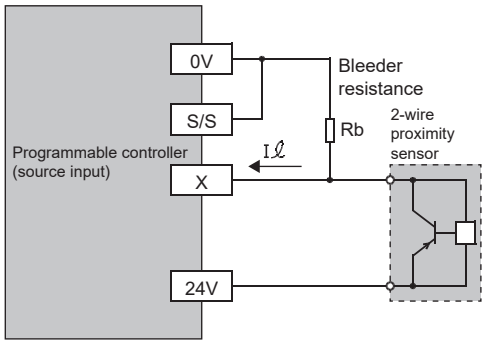
FX5UC CPU module	• Example of the FX5UC-32MT/DSS 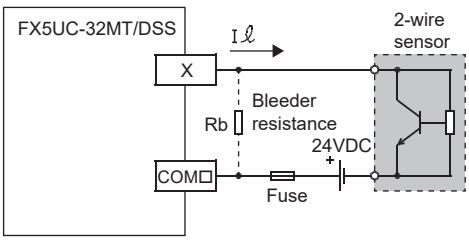 • Example of the FX5UC-32MT/D 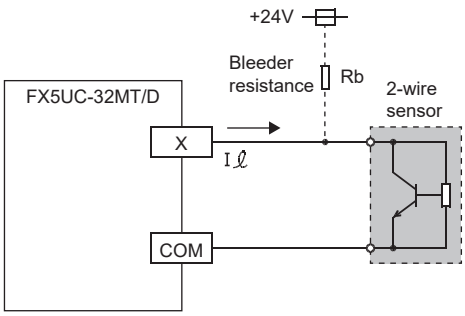	• Example of the FX5UC-32MT/DSS 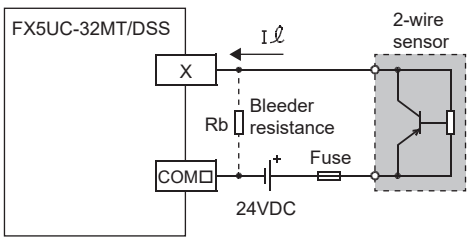

■When the input signal cannot be received because the current is insufficient

The rated input current is 4mA for the FX5S CPU module in X10 or more, FX5UJ CPU module in X10 or more, FX5U CPU module in X20 or more, and I/O module (excluding High-Speed Pulse Input/Output Module).

In some cases, depending on extension devices used, it may not be possible to receive the input signal, due to the insufficient current. Take the following action in such case.

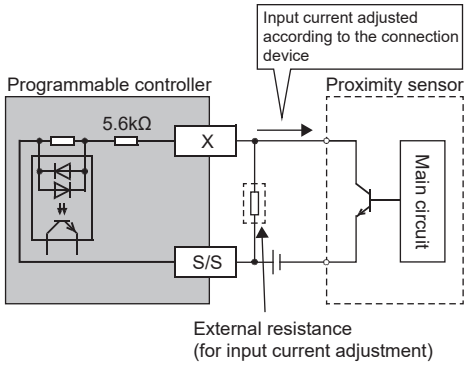

■When capturing high-speed pulses

When capturing pulses of a response frequency of 50kHz to 200kHz[*1] by using inputs X0 to X7[*1], wire the terminals as follows.

- The wiring length should be 5m or less.
- Use shielded twisted-pair cables for connection cables. Ground the shield of each shielded cable only on the CPU module side.
- Connect a 1.5kΩ (1W or more) bleeder resistance to the input terminal, so that the sum of the load current of the open collector transistor output on the mating device and the input current of the CPU module is 20mA or more.

*1 The input response frequency depending on the module is as follows.

Item		Input	Response frequency
FX5S/FX5UJ CPU module		X0, X1, X3, X4	50k to 100kHz
FX5U/FX5UC CPU module	FX5U-32M□, FX5UC-32M□	X0 to X5	50k to 200kHz
	FX5U-64M□, FX5U-80M□, FX5UC-64M□, FX5UC-96M□	X0 to X7	50k to 200kHz
High-speed pulse input/output module		X□0 to X□5	50k to 200kHz

The above-mentioned restrictions differ depending on the specifications of the connecting device (for example, encoder) Please adjust the cable length and load, for connecting device.

Input wiring example

AC power supply type

■FX5S CPU module, FX5UJ CPU module, and FX5U CPU module

• Sink input

Ex.

For the FX5U CPU module

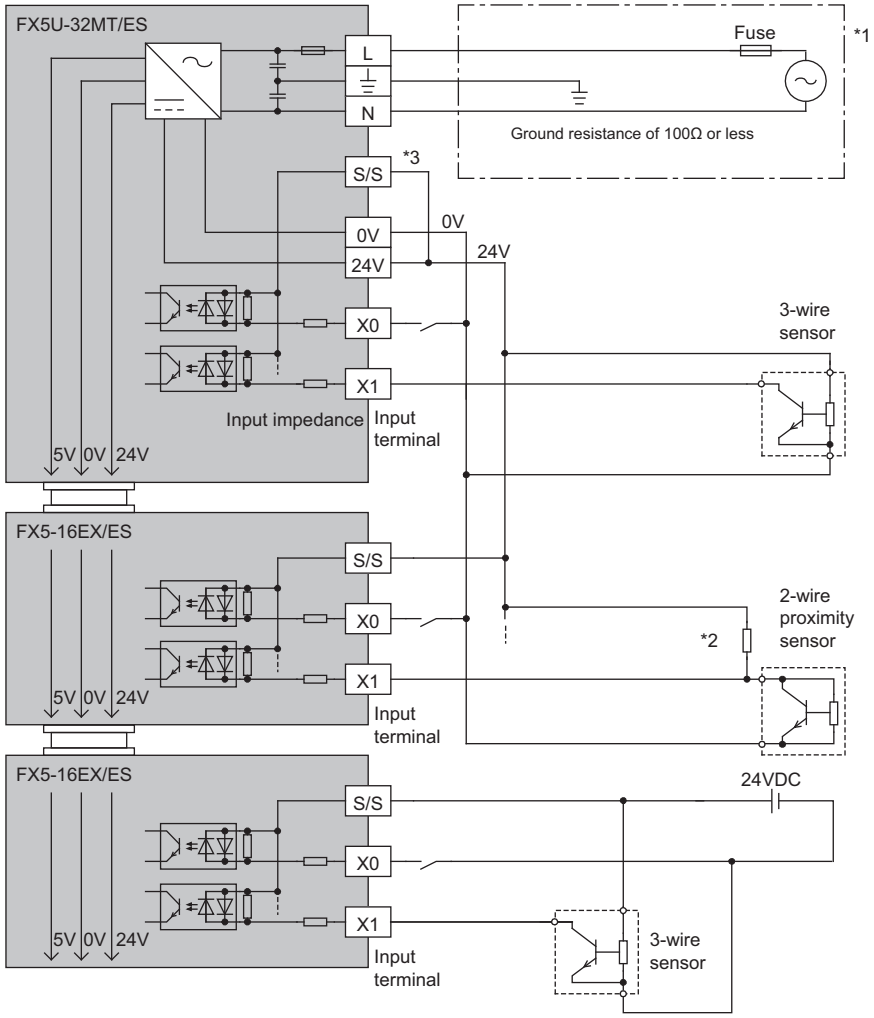

*1 Handle the power supply circuit properly in accordance with "Power Supply Wiring".

*2 For an input device having a parallel resistance or a two-wire proximity switch, a bleeder resistance may be required.

*3 For sink input wiring, short-circuit the [S/S] and [24V] terminals of the CPU module.

Point

The 24VDC service power supply or external power supply can be used for all inputs (X) of the CPU module. However a user needs to select either one for each CPU module or I/O module. Both power supplies cannot be used together in the same module.

• Source input

Ex.

For the FX5U CPU module

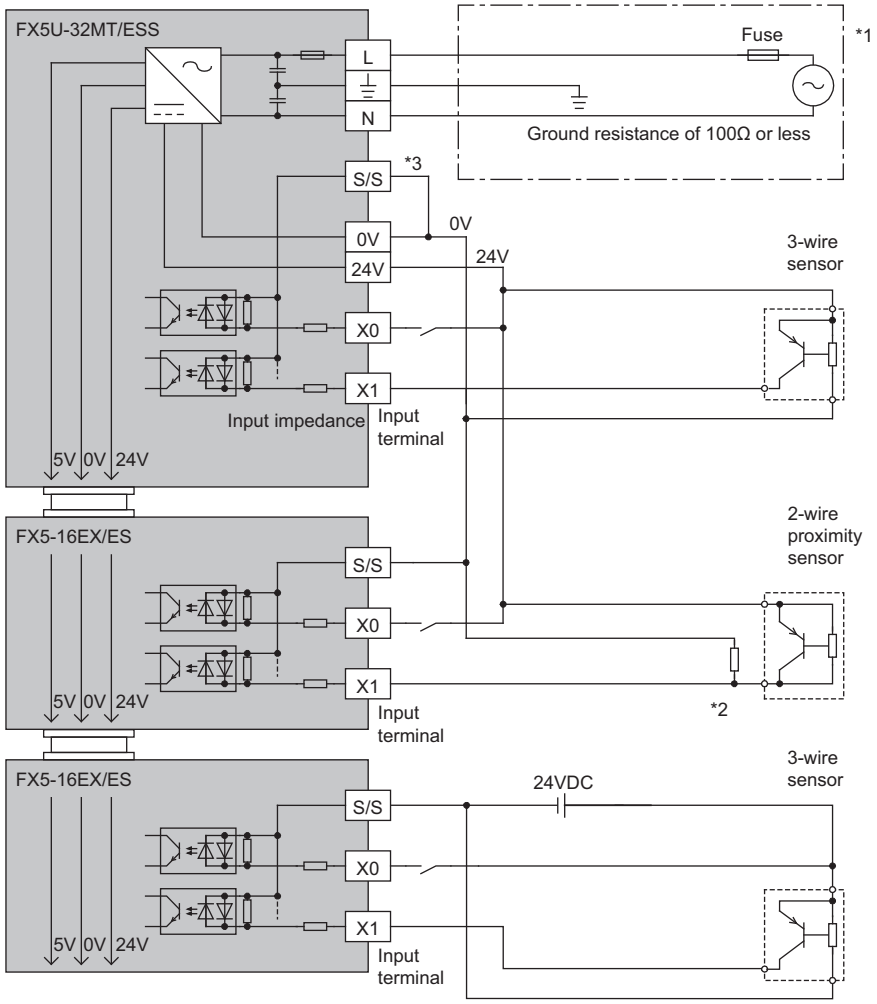

*1 Handle the power supply circuit properly in accordance with "Power Supply Wiring".

*2 For an input device having a parallel resistance or a two-wire proximity switch, a bleeder resistance may be required.

*3 For source input wiring, short-circuit the [S/S] and [0V] terminals of the CPU module.

Point

The 24VDC service power supply or external power supply can be used for all inputs (X) of the CPU module. However a user needs to select either one for each CPU module or I/O module. Both power supplies cannot be used together in the same module.

DC power supply type

■FX5S CPU module, FX5UJ CPU module, and FX5U CPU module

- Sink input

Ex.

For the FX5U CPU module

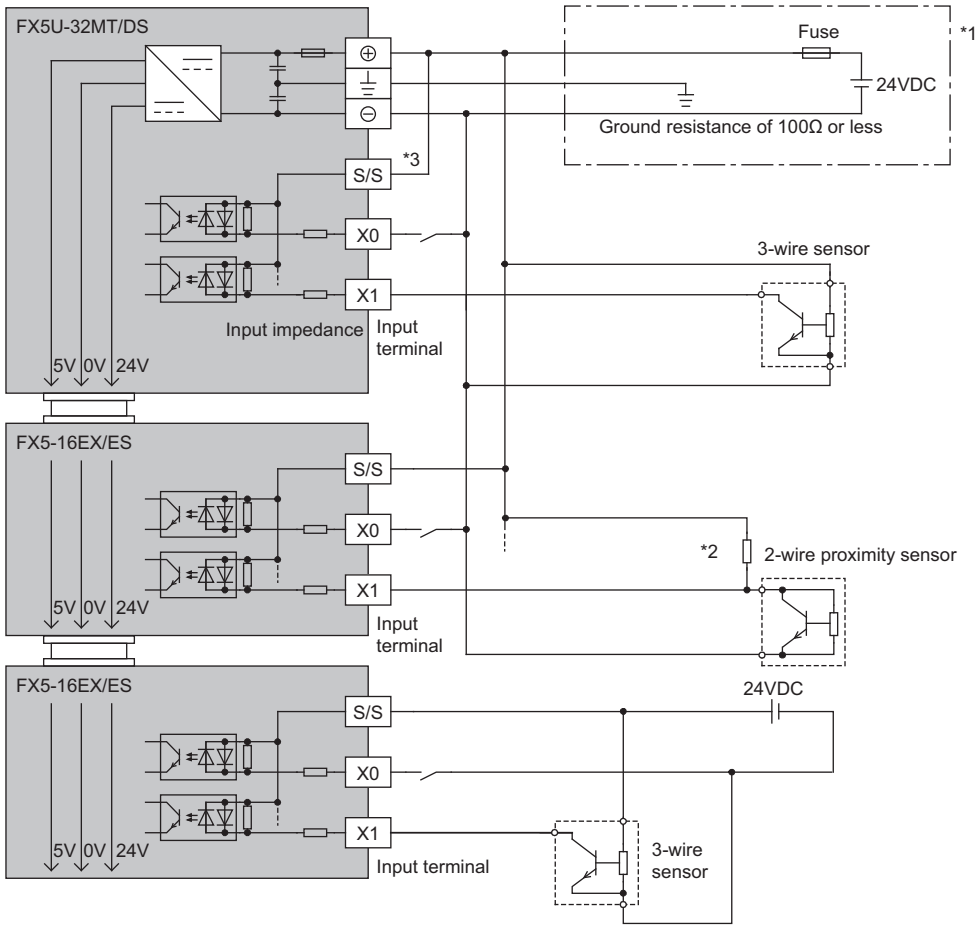

*1 Handle the power supply circuit properly in accordance with "Power Supply Wiring".

*2 For an input device having a parallel resistance or a two-wire proximity switch, a bleeder resistance may be required.

*3 For sink input wiring, short-circuit the [S/S] and [+] terminals of the CPU module.

• Source input

Ex.

For the FX5U CPU module

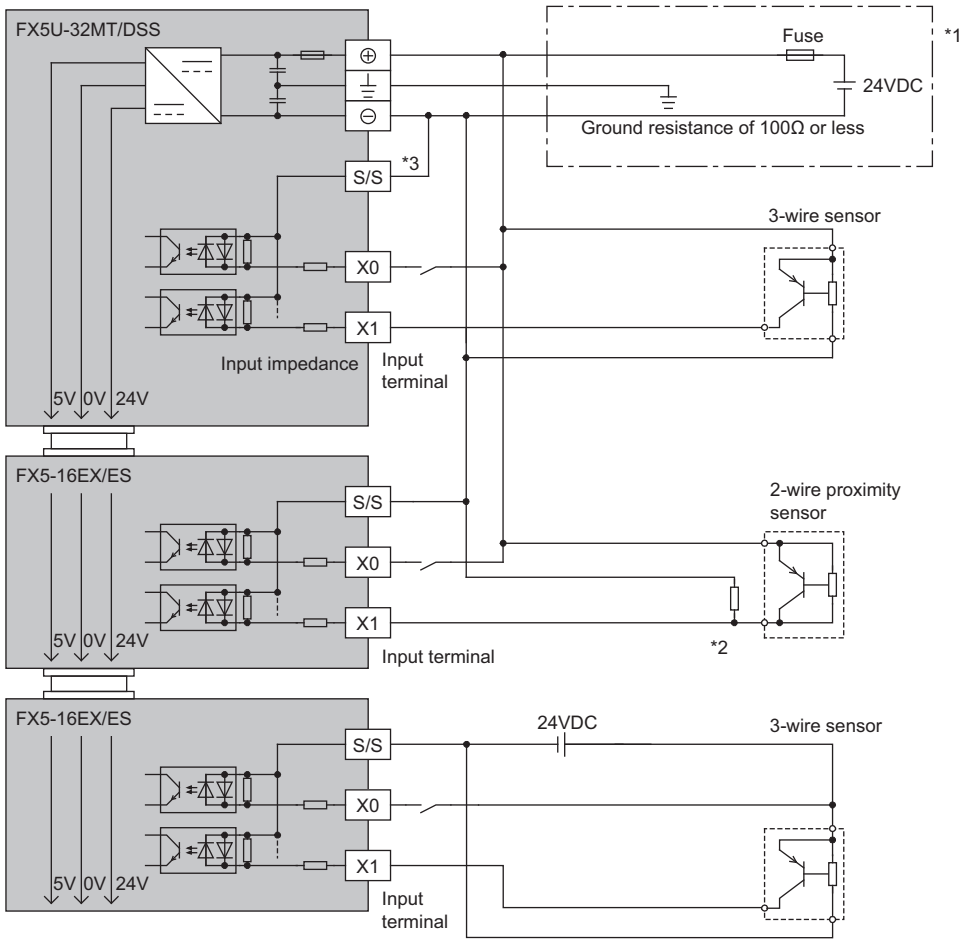

*1 Handle the power supply circuit properly in accordance with "Power Supply Wiring".

*2 For an input device having a parallel resistance or a two-wire proximity switch, a bleeder resistance may be required.

*3 For source input wiring, short-circuit the [S/S] and [-] terminals of the CPU module.

■FX5UC CPU module

The wiring example differs between the sink dedicated type and the sink/source shared type for the input specifications.

- Sink input

Ex.

When using a CPU module of the sink-input-dedicated type

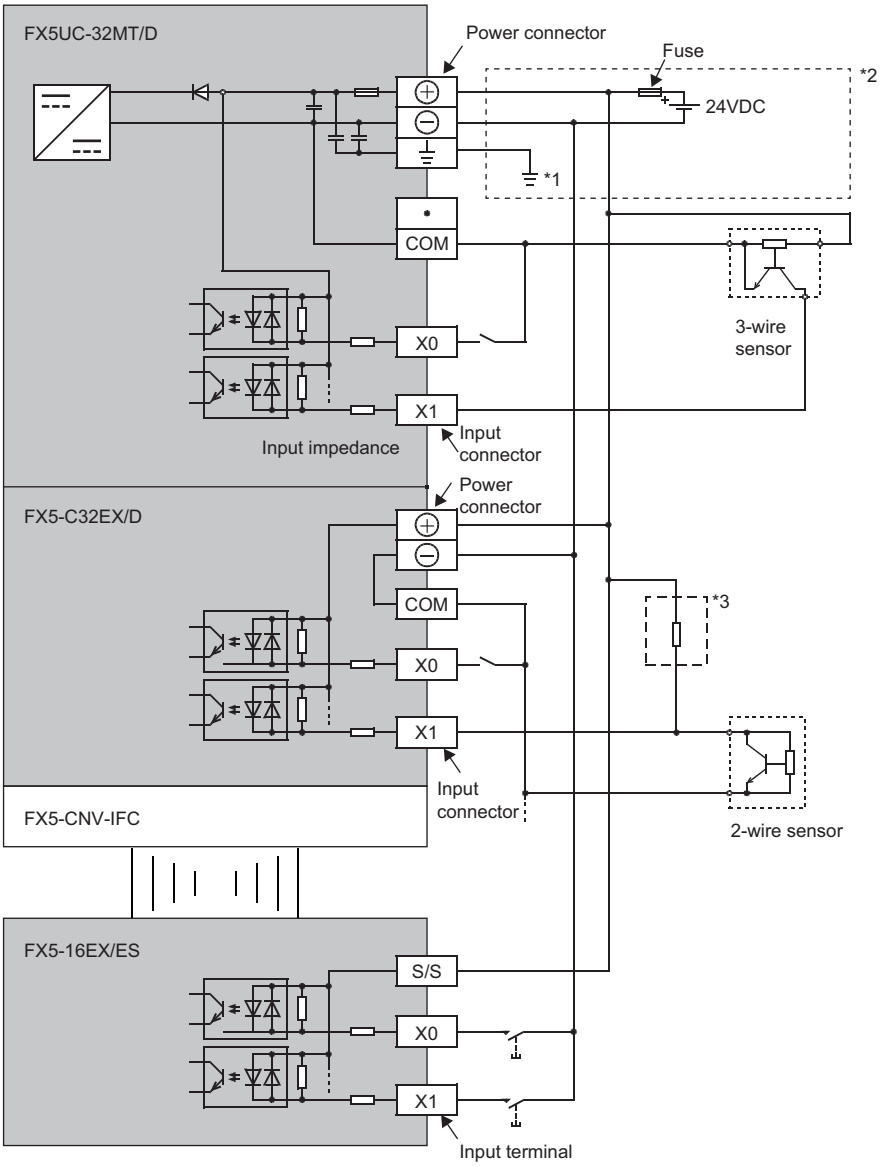

*1 Provide a ground resistance of 100Ω or less.

*2 Handle the power supply circuit properly in accordance with "Power Supply Wiring".

*3 For an input device having a parallel resistance or a two-wire proximity switch, a bleeder resistance may be required.

Ex.

When using a CPU module of the sink/source-input-common type

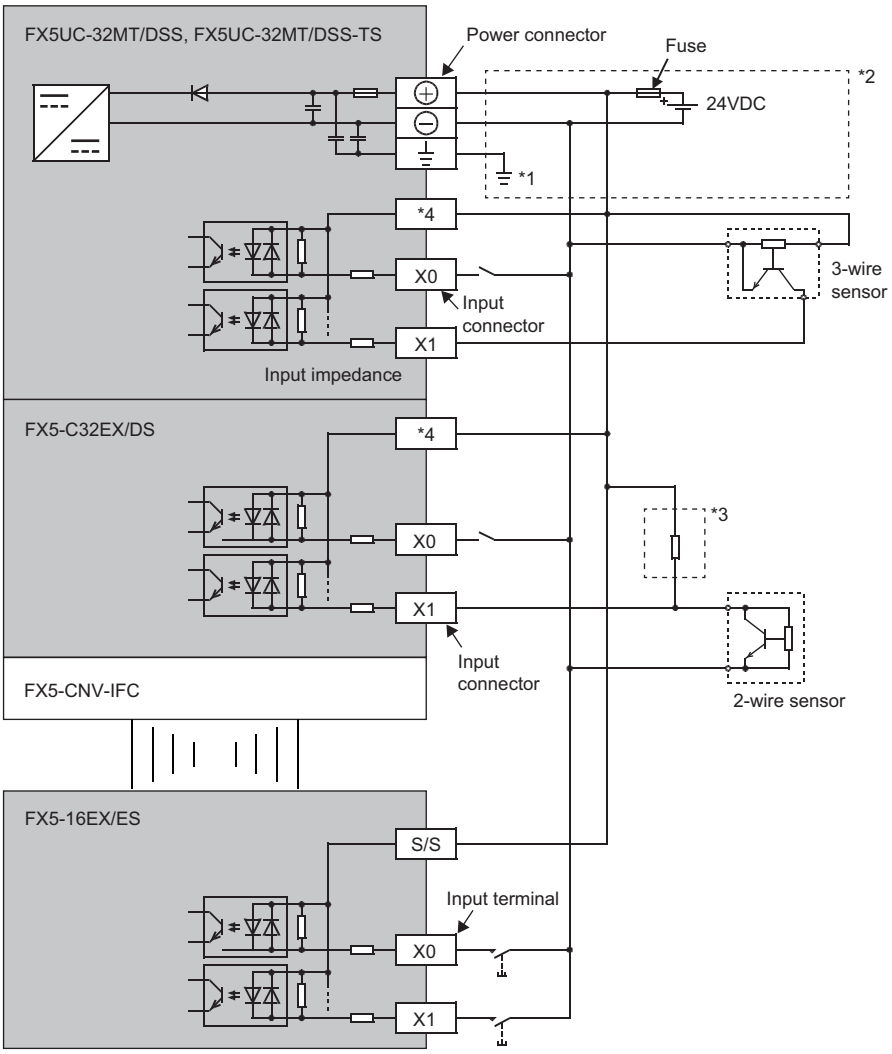

*1 Provide a ground resistance of 100Ω or less.

*2 Handle the power supply circuit properly in accordance with "Power Supply Wiring".

*3 For an input device having a parallel resistance or a two-wire proximity switch, a bleeder resistance may be required.

*4 "COM0" terminal is for the FX5UC-32MT/DSS and "S/S" terminal is for the FX5UC-32MT/DSS-TS.

• Source input

Ex.

When using a CPU module of the sink/source-input-common type

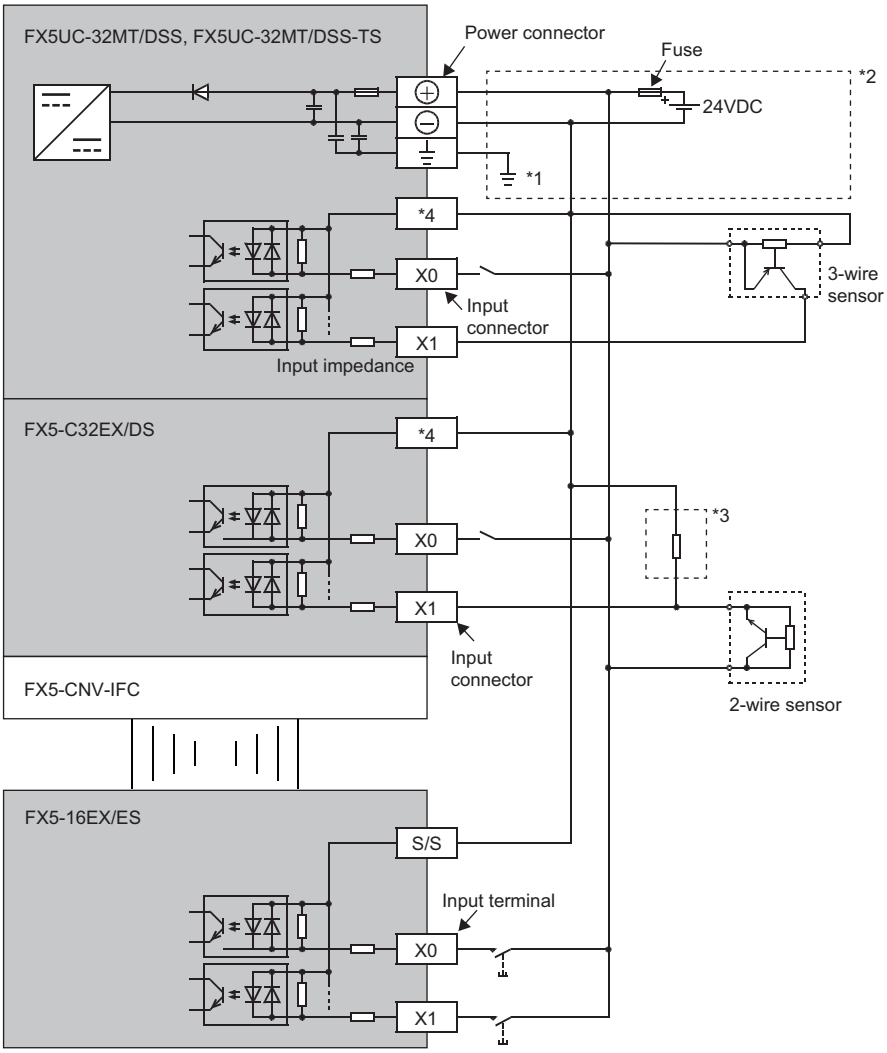

*1 Provide a ground resistance of 100Ω or less.

*2 Handle the power supply circuit properly in accordance with "Power Supply Wiring".

*3 For an input device having a parallel resistance or a two-wire proximity switch, a bleeder resistance may be required.

*4 "COM0" terminal is for the FX5UC-32MT/DSS and "S/S" terminal is for the FX5UC-32MT/DSS-TS.

Input wiring examples of terminal blocks

FX-16E-TB, FX-32E-TB

Connected module	Model
FX5UC CPU module	FX5UC-32MT/D, FX5UC-64MT/D, FX5UC-96MT/D
Input module	FX5-C16EX/D, FX5-C32EX/D
I/O module	FX5-C32ET/D

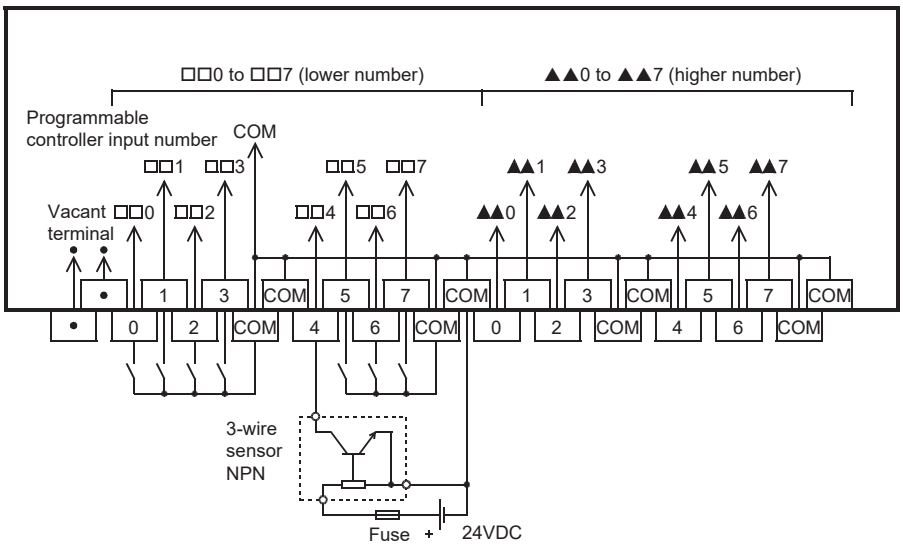

FX-16E-TB/UL, FX-32E-TB/UL

Connected module	Model
FX5UC CPU module	FX5UC-32MT/DSS, FX5UC-64MT/DSS, FX5UC-96MT/DSS
Input module	FX5-C16EX/DS, FX5-C32EX/DS
I/O module	FX5-C32ET/DSS

■For sink wiring

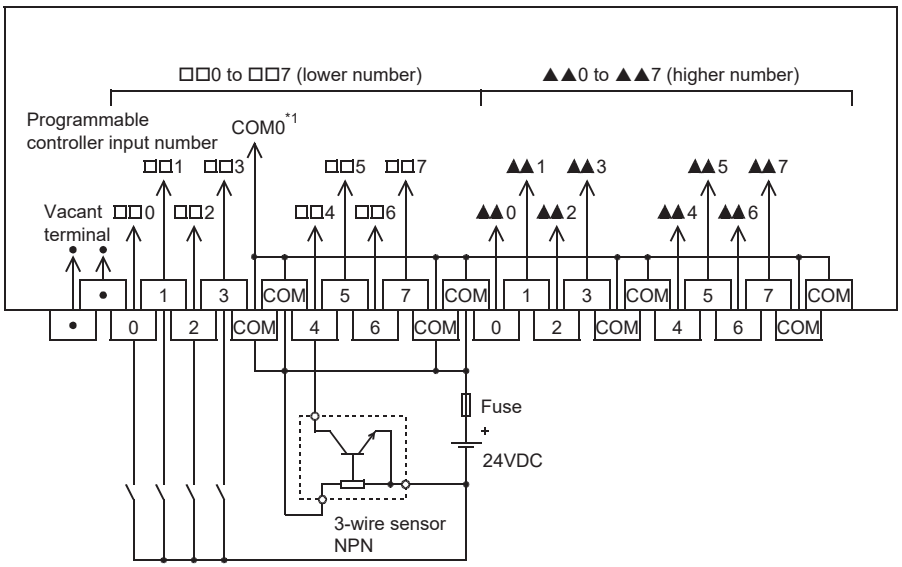

*1 Replace this number with the one of the connected connector.

■For source wiring

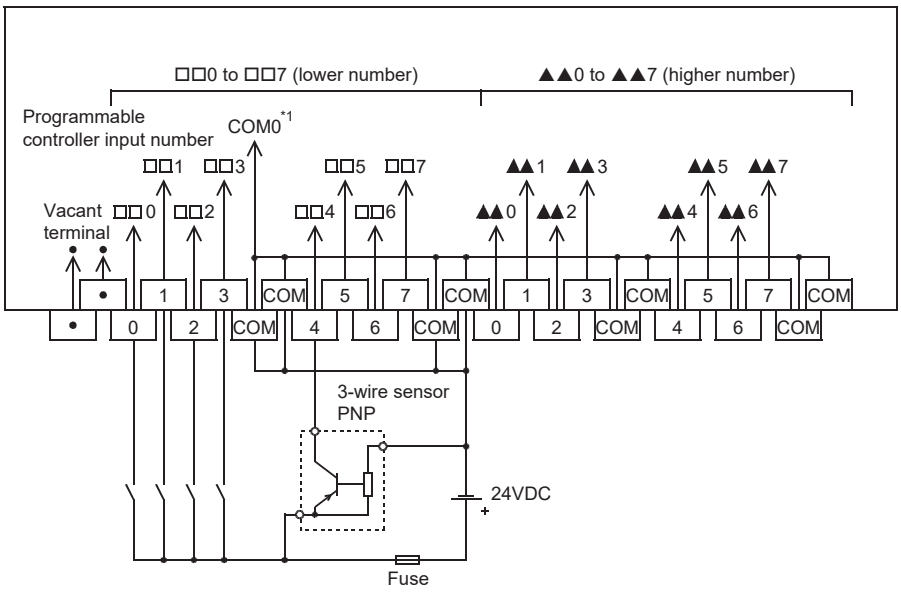

*1 Replace this number with the one of the connected connector.

FX-16EX-A1-TB

Connected module	Model
FX5UC CPU module	FX5UC-32MT/D, FX5UC-64MT/D, FX5UC-96MT/D
Input module	FX5-C16EX/D, FX5-C32EX/D
I/O module	FX5-C32ET/D

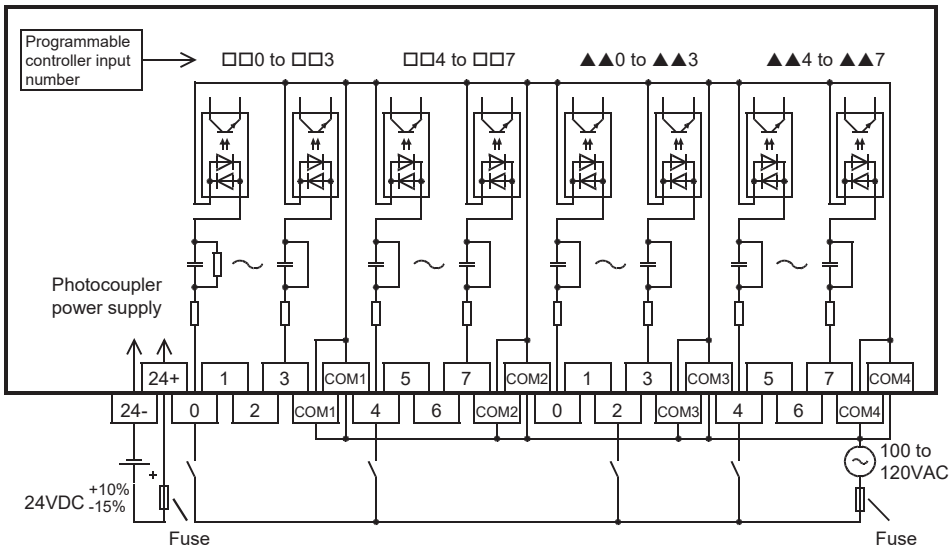

15.6 Output Wiring

Relay output

Product life of relay output contacts

The product life of relay output contacts varies considerably depending on the load type used.
Note that loads generating reverse electromotive force or rush current may cause poor contact or welding of contacts which may lead to considerable reduction of the contact product life.

■Inductive load

Inductive loads generate large reverse electromotive force between contacts at shutdown, which may cause arc discharge. At a fixed current consumption, as the power factor (phase between current and voltage) gets smaller, the arc energy gets larger.
The following table lists the standard life of contacts used for inductive loads, such as contactors and solenoid valves.

Module	Inductive load	Standard life
CPU module, output module, I/O modules, powered input/output module	20VA	500000 times
Terminal block	35VA	

The following table lists the approximate life of a relay based on the results of an operation life test.

- Test condition: 1sec ON/1sec OFF

Module	Load capacity		Contact life
CPU module, output module, I/O modules, powered input/output module	20VA	0.2A/100VAC	3000000 times
		0.1A/200VAC	
	35VA	0.35A/100VAC	1000000 times
		0.17A/200VAC	
	80VA	0.8A/100VAC	200000 times
		0.4A/200VAC	
Terminal block	35VA	0.35A/100VAC	3000000 times
		0.17A/200VAC	
	80VA	0.8A/100VAC	1000000 times
		0.4A/200VAC	
	120VA	1.2A/100VAC	200000 times
		0.6A/200VAC	

The product life of relay contacts becomes considerably shorter than the above conditions when the rush overcurrent is shut down.
Please refer to the following measures regarding the inductive load.
☞ Page 209 Contact protection circuit for inductive loads
Some types of inductive loads generate rush current 5 to 15 times the stationary current at activation. Note that the rush current does not exceed the current corresponding to the maximum specified resistance load.

■Lamp load

Lamp loads generally generate rush current 10 to 15 times the stationary current. Note that the rush current does not exceed the current corresponding to the maximum specified resistance load.

■Capacitive load

Capacitive loads can generate rush current 20 to 40 times the stationary current. Note that the rush current does not exceed the current corresponding to the maximum specified resistance load.
Capacitive loads such as capacitors may be present in electronic circuit loads including inverters.

■Resistance load

For maximum load specifications of resistance load, refer to the following.

Module		Reference
CPU module		☞ Page 95 Output Specifications
I/O module	Output module	☞ Page 126 Output Module
	I/O module	☞ Page 130 I/O Module

Handling of relay output

■Output terminal

For the relay type, one common terminal is used for 4 or 8 output points (3 or 4 output points for the FX5UJ).

The common terminal blocks can drive loads of different circuit voltage systems (for example, 100VAC and 24VDC).

FX5S CPU module, FX5UJ CPU module, and FX5U CPU module	FX5UC CPU module
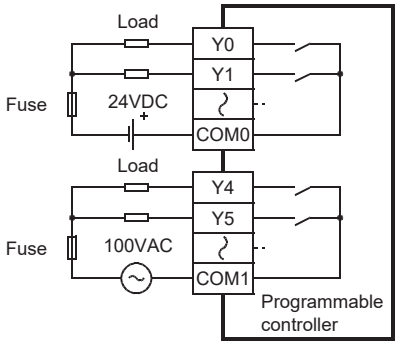	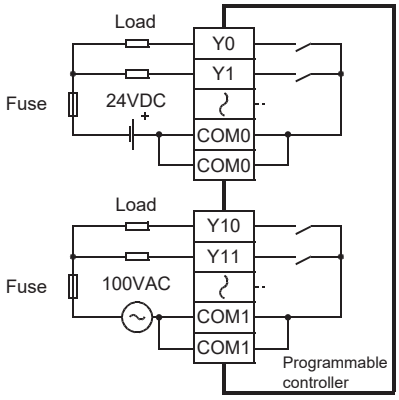

■External power supply

Use an external power supply of 30VDC or less or 240VAC or less (250VAC or less when the module does not comply with CE, UL, or cUL standards) for loads.

■Circuit insulation

The programmable controller internal circuit and external load circuits are electrically insulated between the output relay coil and contact.

The common terminal blocks are separated from one another.

■Display of operation

When power is supplied to the output relay coil, the LED turns on and the output contact is turned on.

■Response time

The response time of the output relay from when the power is applied to the coil until the output contact is turned on and from when the coil is shut off until the output contact is turned off is approximately 10ms.

■Output current

At a circuit voltage of 240VAC or less (250VAC or less when the module does not comply with CE, UL, or cUL standards), a resistance load of 2A per point or an inductive load of 80VA or less (100VAC or 200VAC) can be driven.

For the life of the contact for switching an inductive load, refer to ☞ Page 207 Inductive load.

When an inductive load is switched, connect a diode (for commutation) or a surge absorber in parallel with this load.

DC circuit	AC circuit
Diode (for commutation)	Surge absorber

■Open circuit leakage current

There is no leakage current when the outputs are off.

Wiring precautions

■Protection circuit for load short-circuiting

A short-circuit at a load connected to an output terminal could cause burnout at the output element or the PCB. To prevent this, a protection fuse should be inserted at the output.

FX5S CPU module, FX5UJ CPU module, and FX5U CPU module	FX5UC CPU module
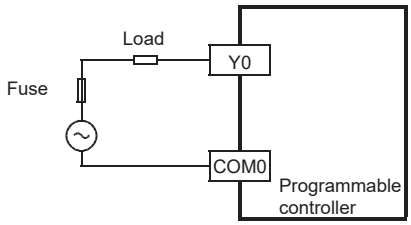	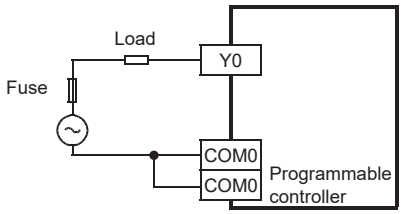

■Contact protection circuit for inductive loads

An internal protection circuit for the relay is not provided for the relay output circuit in this product. It is recommended to use inductive loads with built-in protection circuits. When using loads without built-in protection circuits, insert an external contact protection circuit, etc. to reduce noise and extend product life.

DC circuit	AC circuit
Connect a diode in parallel with the load. 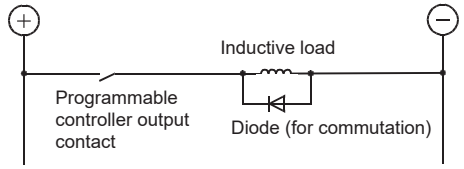 The diode (for commutation) must comply with the following specifications. Reverse voltage: 5 to 10 times the load voltage Forward current: Load current or more	Connect a surge absorber (CR composite parts such as surge killer and spark killer) parallel to the load. 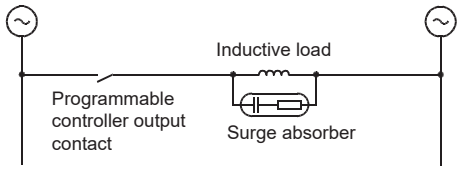 Select a surge absorber with voltage rating that is suitable for the output used. For other specifications, refer to the following. Electrostatic capacity: Approx. 0.1μF Resistance value: Approx. 100 to 200Ω

■Interlock

For loads, such as forward/reverse contactors, where a hazardous condition could result if switched on simultaneously, an external interlock should be provided for interlocking along with an interlock in the programmable controller program as shown below.

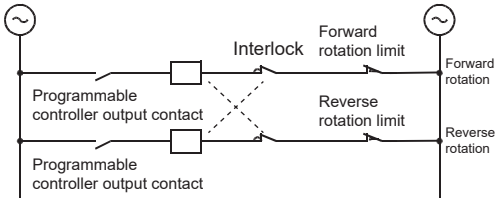

■In-phase

Programmable controller output contacts (*) should be used in an "in-phase" manner.

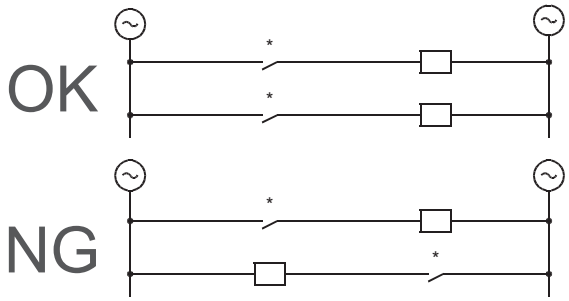

Transistor output

Sink and source output

Sink output and source output products are available for transistor outputs of the CPU module, I/O modules, and terminal block.

■Differences in circuit

Sink output [-common]	Source output [+common]
Output to make load current flow into the output (Y) terminal is called sink output. 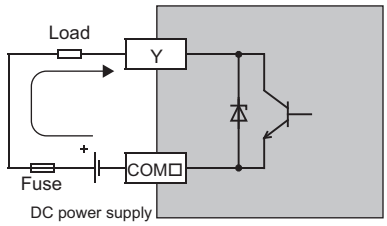 A common number is entered into □ of "COM□".	Output to make load current flow out of the output (Y) terminal is called source output. 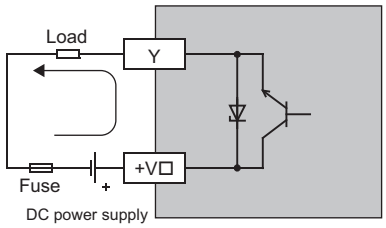 A common number is entered into □ of "+V□".

Handling of transistor output

■Output terminal

Module	Sink output	Source output
CPU module, output module (extension cable type), I/O module (extension cable type), powered input/output module, and high-speed pulse input/output module	Connect each COM□ (number) terminal to the minus side of the load power supply. The COM□ terminals are not connected internally. 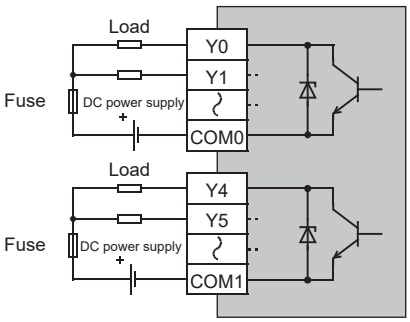 	Connect +V□ (number) terminal to the plus side of the load power supply. The +V□ terminals are not connected internally. 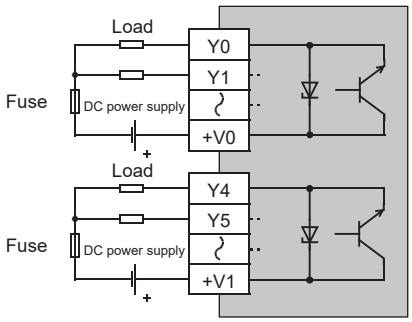
Output module (extension connector type) and I/O module (extension connector type)	COM□ (number) terminals that are connected to each other inside the programmable controller are prepared. For external wiring, connect the COM□ (number) terminals outside the programmable controller to reduce the load per one COM□ terminal. 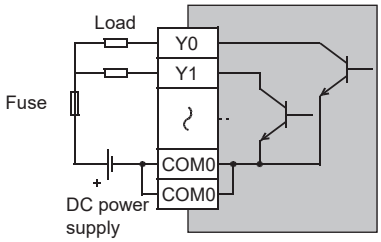 	+V□ (number) terminals that are connected to each other inside the programmable controller are prepared. For external wiring, connect the +V□ (number) terminals outside the programmable controller to reduce the load per one +V□ terminal. 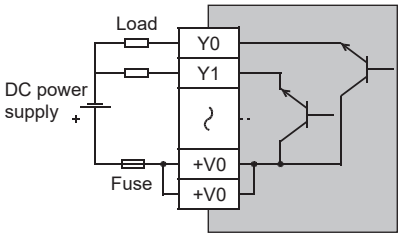

■External power supply

For driving the load, use a smoothing power supply of 5-30VDC that can output current two or more times the current rating of the fuse connected to the load circuit.

■Circuit insulation

The internal circuit of the programmable controller and the output transistor are insulated with a photocoupler.
The common blocks are separated from one another.

■Display of operation

Operation indicator LEDs are built into the CPU module and output modules, and turn on when photocouplers are drive, and the transistors are switched on.
For a module with the DISP switch, the LED target is switched with the DISP switch.

■Response time

Time taken from when the photocoupler of the module is driven (or shut off) to when the transistor is turned on (or off) differs depending on the output terminal used. For specifications of each module, refer to the following.

Module		Reference
CPU module		☞ Page 95 Output Specifications
I/O module	Output module	☞ Page 126 Output Module

The transistor OFF time is longer under lighter loads. For example, under a load of 24VDC 40mA, the response time is approx. 0.3ms.
When response performance is required under light loads, provide a dummy resistor as shown below to increase the load current.

Module	Sink output	Source output
FX5S CPU module FX5UJ CPU module FX5U CPU module	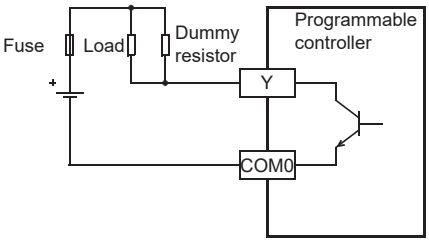	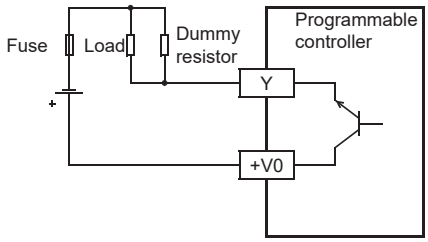
FX5UC CPU module	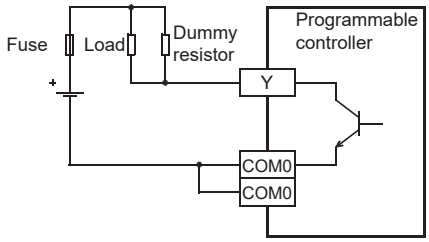	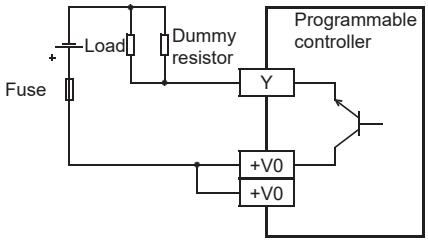

■Output current

Maximum load differs for each module. For specifications of each module, refer to the following.
When driving a semiconductor device, carefully check the input voltage characteristics of the device.

Module		Reference
CPU module		☞ Page 95 Output Specifications
I/O module	Output module	☞ Page 126 Output Module

■Open circuit leakage current

0.1mA or less

Wiring precautions

■Protection circuit for load short-circuiting

A short-circuit at a load connected to an output terminal could cause burnout at the output device or the PCB.

To prevent this, a protection fuse should be inserted at the output. Use a load power supply capacity that is at least 2 times larger than the load current.

Module	Sink output	Source output
FX5S CPU module FX5UJ CPU module FX5U CPU module	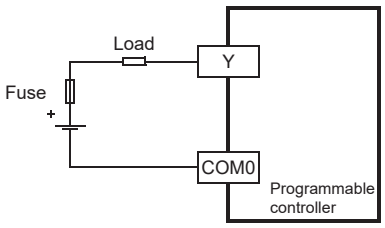	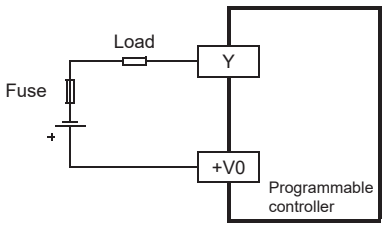
FX5UC CPU module	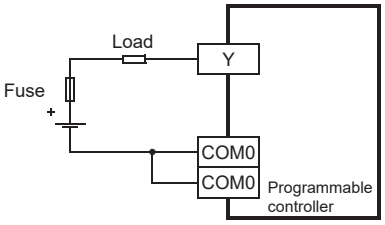	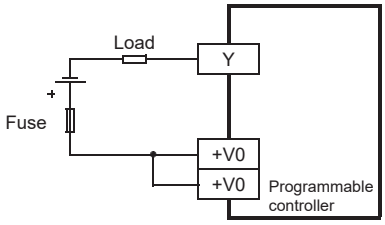

■Contact protection circuit for inductive loads

When an inductive load is connected, connect a diode (for commutation) in parallel with the load as necessary.

The diode (for commutation) must comply with the following specifications.

Item	Standard
Reverse voltage	5 to 10 times as high as the load voltage
Forward current	Load current or larger

Module	Sink output	Source output
FX5S CPU module FX5UJ CPU module FX5U CPU module	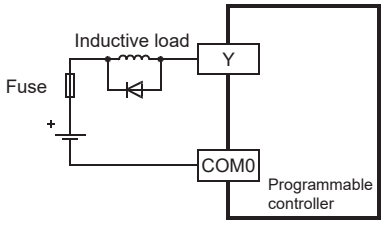	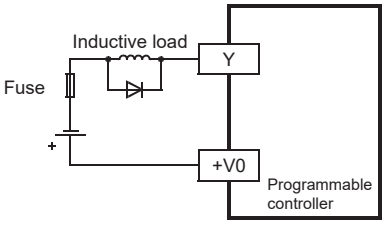
FX5UC CPU module	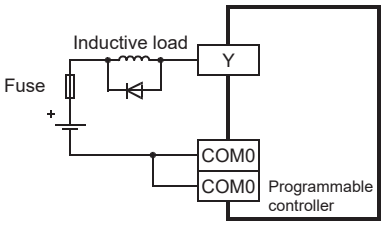	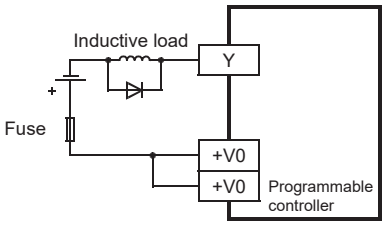

■Interlock

For loads, such as forward/reverse contactors, where a hazardous condition could result if switched on simultaneously, an external interlock should be provided for interlocking along with an interlock in the programmable controller program as shown below.

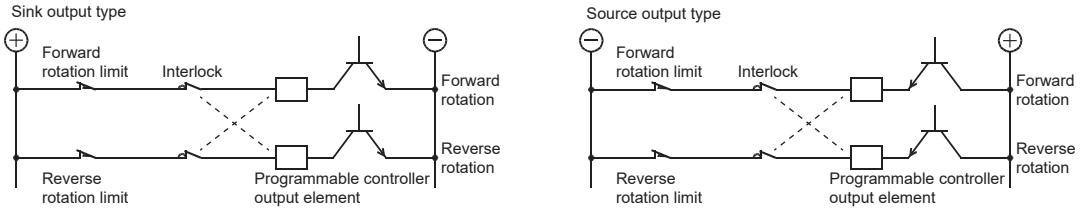

Triac output

Handling of triac output

■Output terminal

Four triac output points are covered by one common terminal. Therefore, each common terminal can drive loads of different circuit voltages (Example: 100VAC and 200VAC).

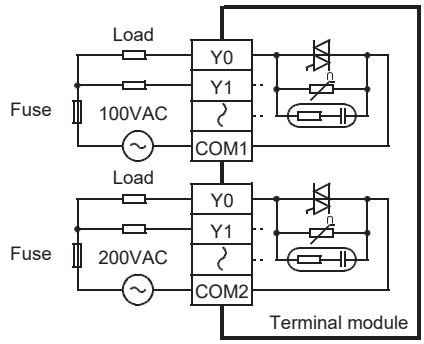

■Circuit insulation

Insulation is provided between the internal circuit and the output element (triac) with photothyristors.
The common blocks are separated from one another.

■Display of operation

The LED turns on and the output triac is turned on when photothyristors are actuated.

■Response time

The response time until the output triac is turned on after the photothyristors are actuated (or shut off) is 1ms or less, and the response time until the output triac is turned off is 10ms or less.

■Output current

Current of 0.3A can flow per one output point. However, current of four output points should be 0.8A (average of 0.2A per one point) to suppress temperature rise. When a load with a high rush current is frequently turned on or off, the mean-square current should be 0.2A or less.

«Example»

$$\sqrt{\frac{4^2 \times 0.02 + 0.4^2 \times 0.7}{0.02 + 0.7 + 10}} = 0.2\text{A}$$

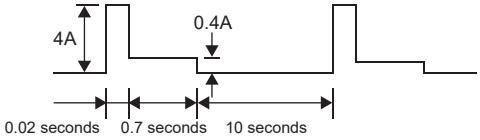

■Open circuit leakage current

C-R absorbers are connected in parallel at the triac output terminal for turning off the triac. Thus, open circuit leakage currents of 1mA/100VAC or 2mA/200VAC occurs. Since the triac output type has open circuit leakage currents, even after the triac output is turned off, a small relay and a minute current load with low rated operation currents may continuously operate. Therefore, the load should be equal to or more than 0.4VA/100VAC or 1.6VA/200VAC. For loads lower than these values, connect the surge absorbers described later in parallel.

Wiring precautions

■Protection circuit for load short-circuiting

A short-circuit at a load connected to an output terminal could cause burnout at the output device or the PCB.
To prevent this, a protection fuse should be inserted at the output.

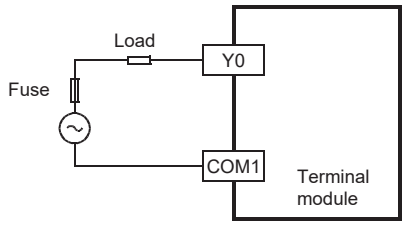

■Minute current load

C-R absorbers are connected in parallel at the triac output circuit for turning off the triac. When a minute current load of 0.4VA or less/100VAC or 1.6VA or less/200VAC is connected, a surge absorber must be connected in parallel with the load. Select a surge absorber with voltage rating that is suitable for the output used. For other specifications, refer to the following.

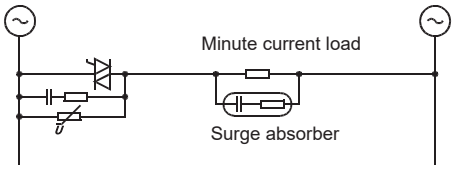

Standard
Electrostatic capacity: Approx. 0.1μF
Resistance value: Approx. 100 to 200Ω

■Interlock

For loads, such as forward/reverse contactors, where a hazardous condition could result if switched on simultaneously, an external interlock should be provided for interlocking along with an interlock in the programmable controller program as shown below.

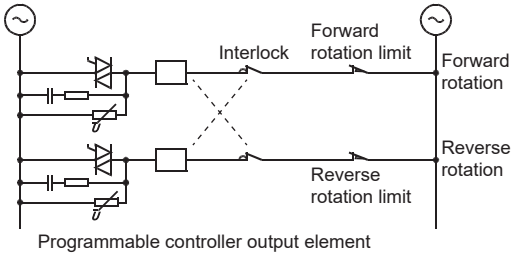

■In-phase

Programmable controller output contacts (*1) should be used in an "in-phase" manner.

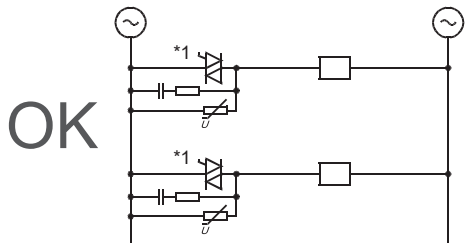

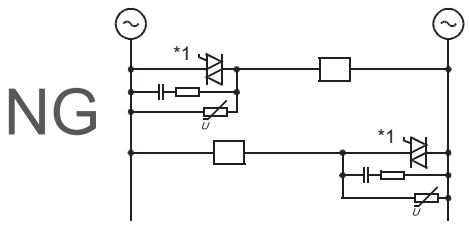

Output wiring example

Relay output

■FX5S CPU module, FX5UJ CPU module, and FX5U CPU module

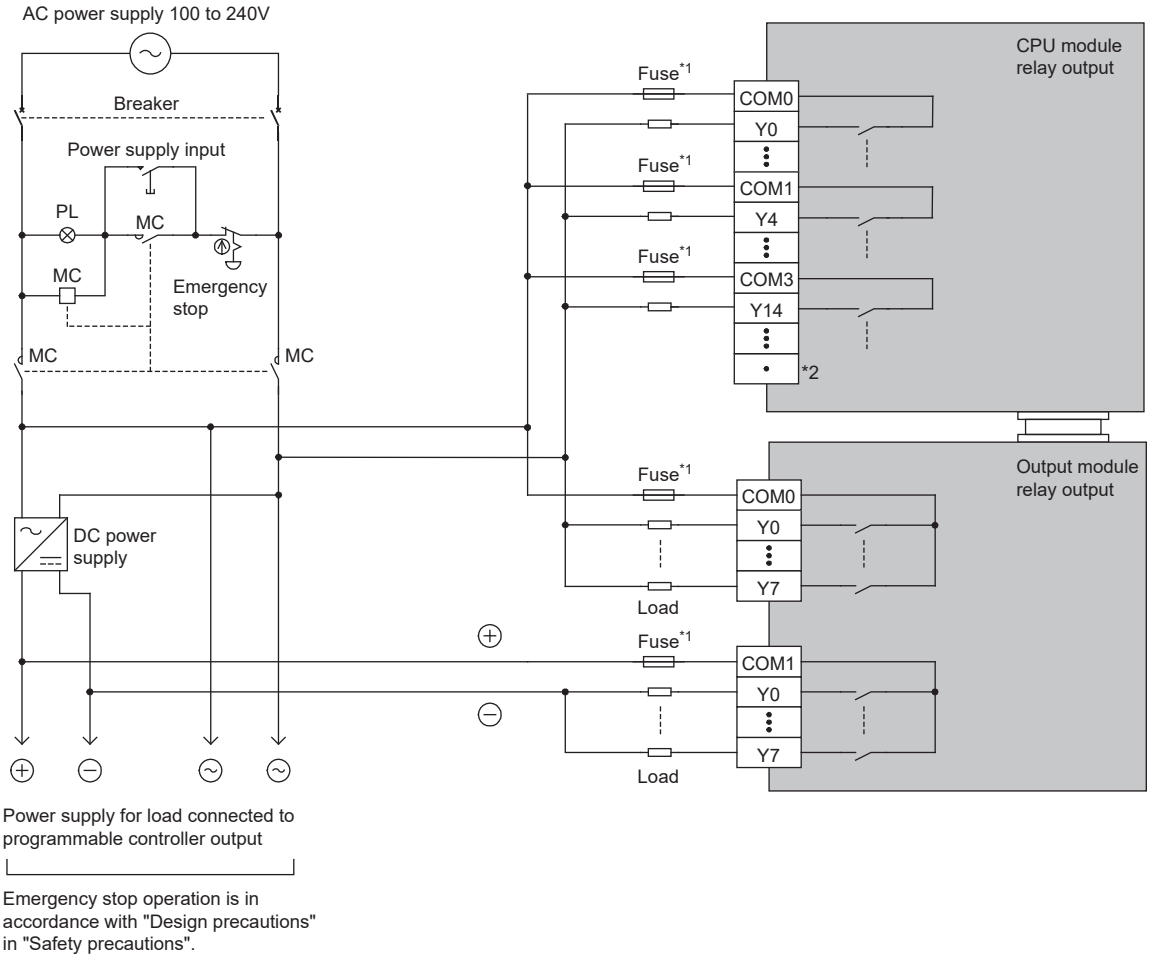

Power supply for load connected to programmable controller output

Emergency stop operation is in accordance with "Design precautions" in "Safety precautions".

*1 The output circuit of the programmable controller does not have a built-in fuse.
Provide a fuse suitable for each load to prevent melting of the wires on the circuit board caused by output device breakdown due to load short-circuiting.

*2 "·" represents vacant terminals.

■FX5UC CPU module

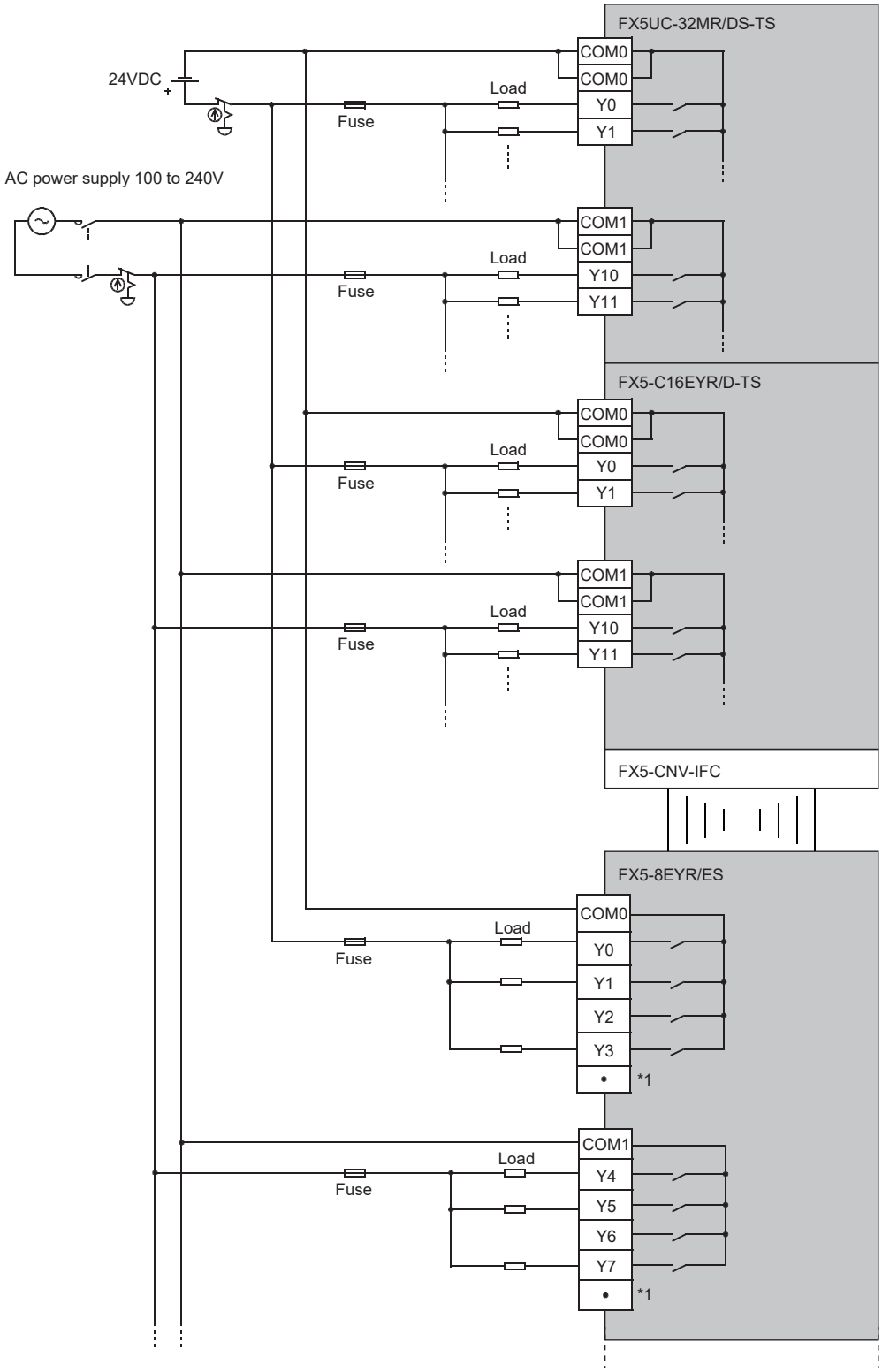

*1 "·" represents vacant terminals.

Transistor output

■FX5S CPU module, FX5UJ CPU module, and FX5U CPU module

- Sink output type

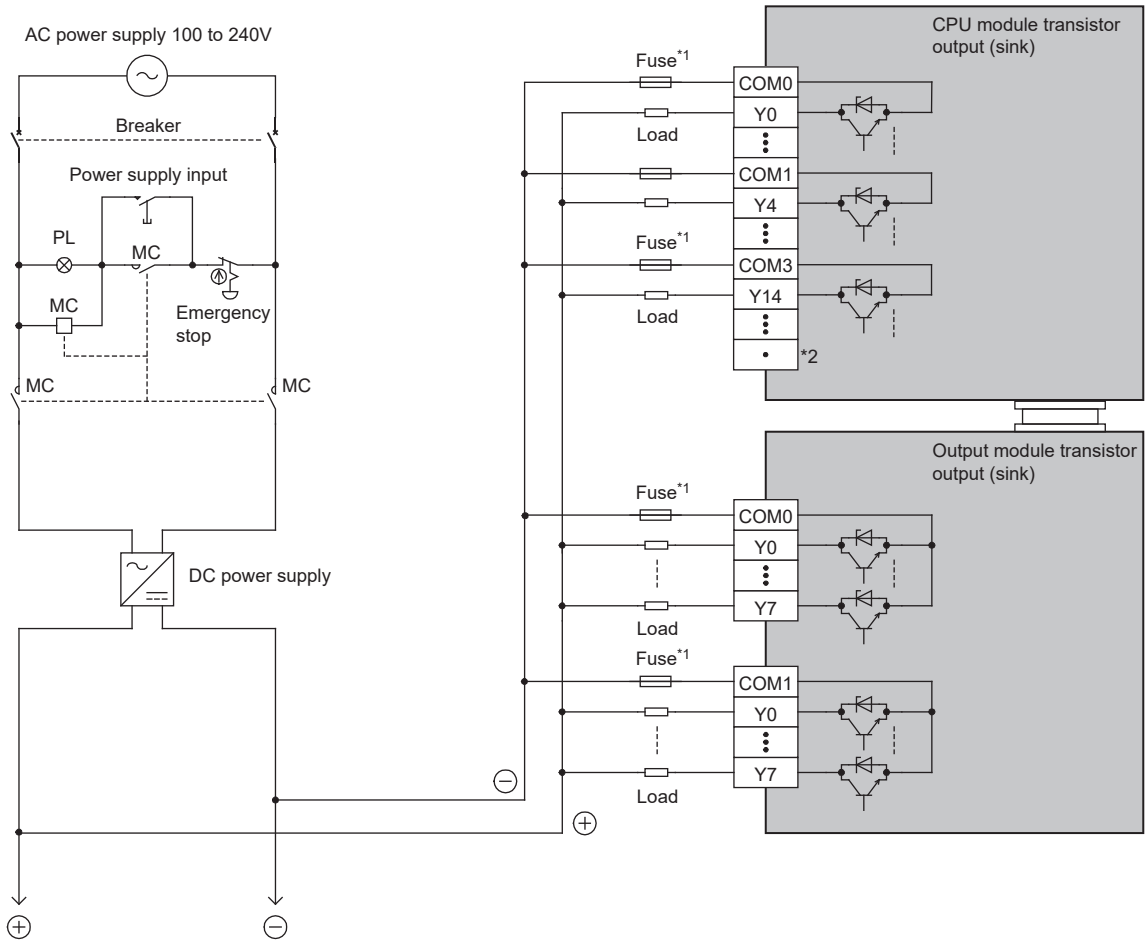

Power supply for load connected to programmable controller output

Emergency stop operation is in accordance with "Design precautions" in "Safety precautions".

*1 The output circuit of the programmable controller does not have a built-in fuse.
Provide a fuse suitable for each load to prevent melting of the wires on the circuit board caused by output device breakdown due to load short-circuiting.

*2 "·" represents vacant terminals.

• Source output

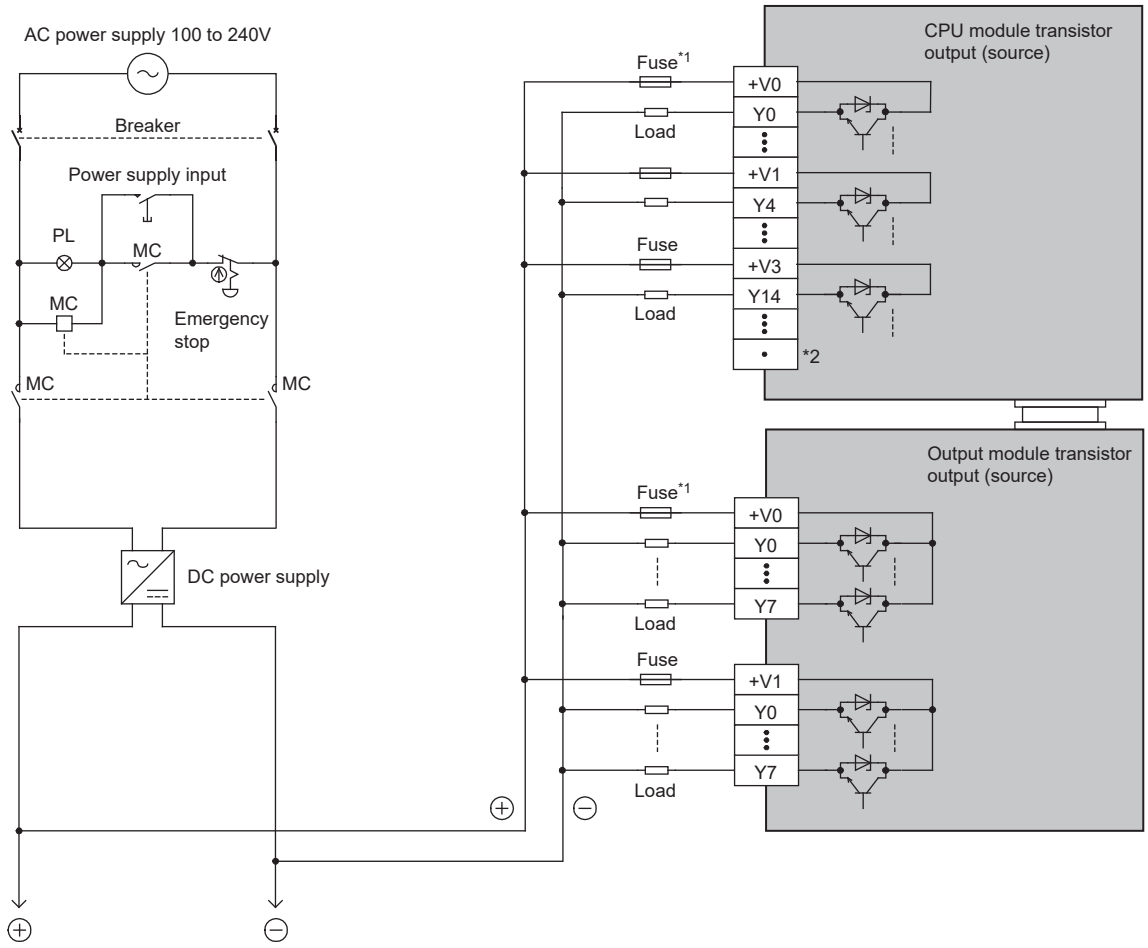

Power supply for load connected to programmable controller output

Emergency stop operation is in accordance with "Design precautions" in "Safety precautions".

*1 The output circuit of the programmable controller does not have a built-in fuse.
Provide a fuse suitable for each load to prevent melting of the wires on the circuit board caused by output device breakdown due to load short-circuiting.

*2 "·" represents vacant terminals.

■FX5UC CPU module

• Sink output

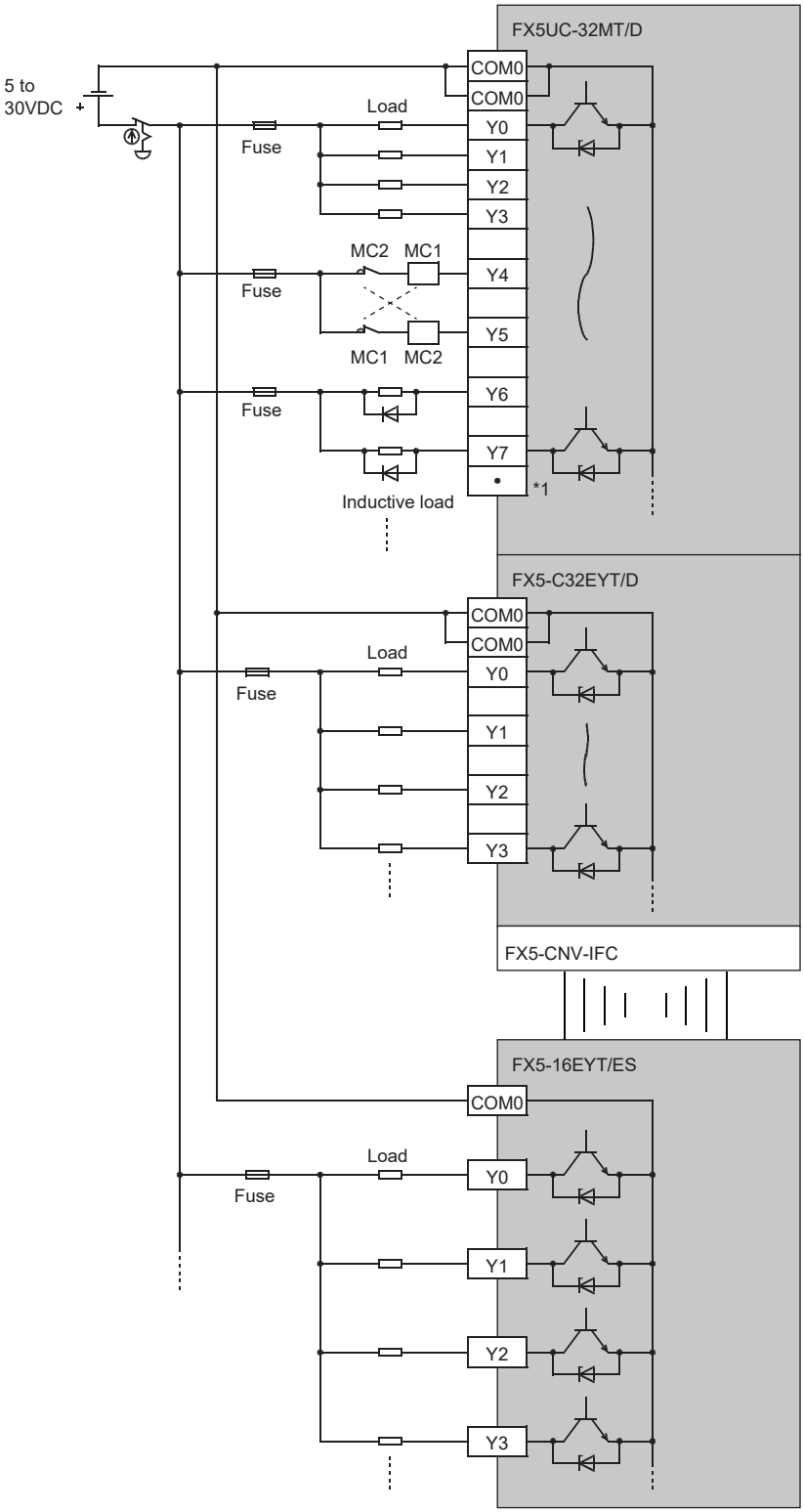

*1 "-" represents vacant terminals.

• Source output

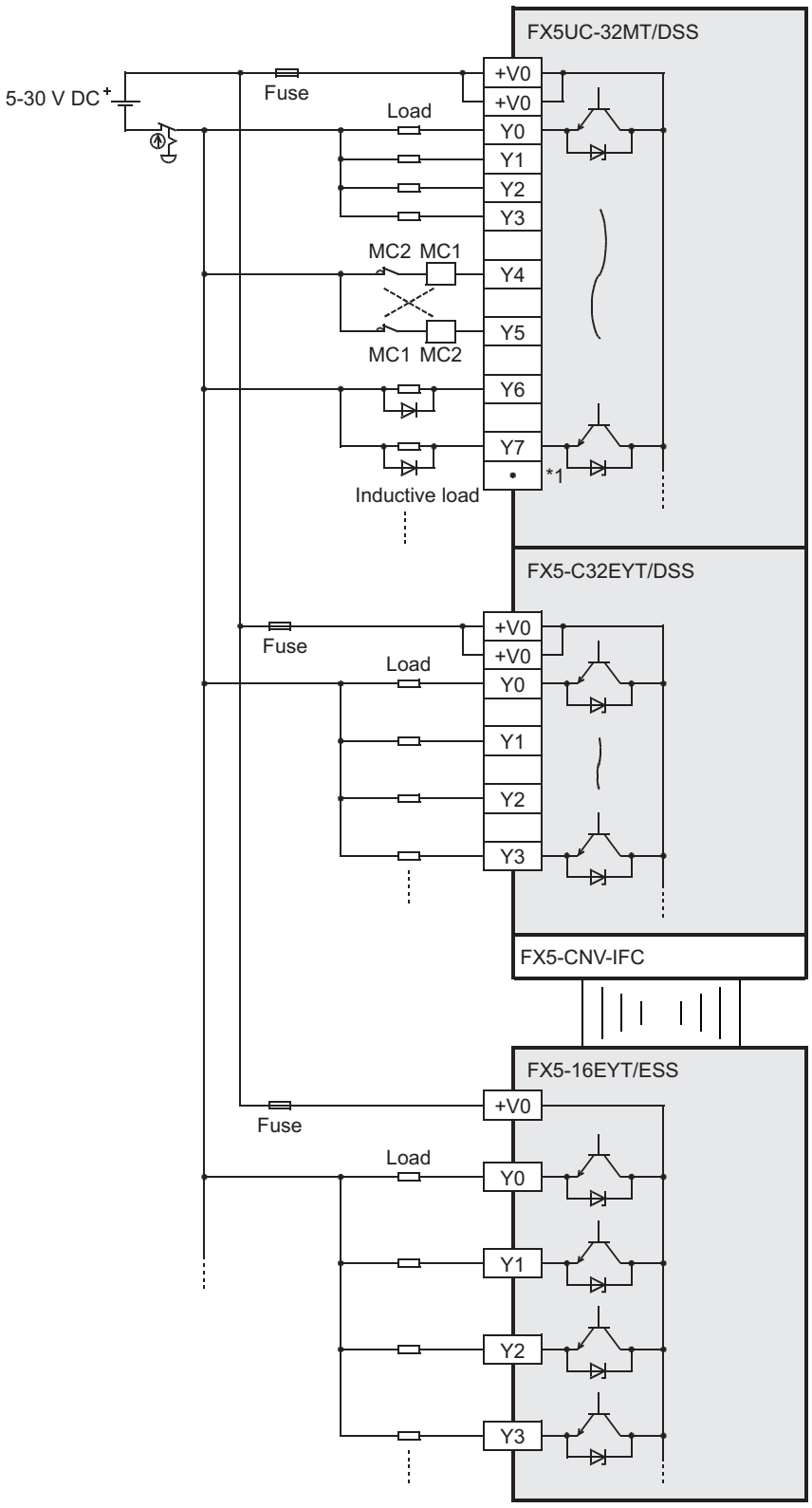

*1 "·" represents vacant terminals.

Output wiring examples of terminal blocks

FX-16E-TB, FX-32E-TB

Connected module	Model
FX5UC CPU module	FX5UC-32MT/D, FX5UC-64MT/D, FX5UC-96MT/D
Output module	FX5-C16EYT/D, FX5-C32EYT/D
I/O module	FX5-C32ET/D

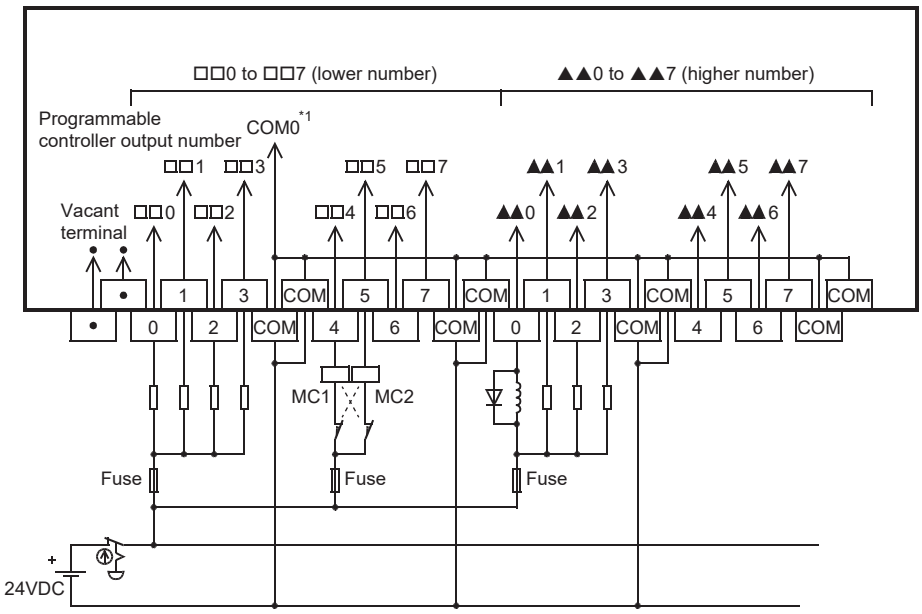

*1 Replace this number with the one of the connected connector.

FX-16E-TB/UL, FX-32E-TB/UL

Connected module	Model
FX5UC CPU module	FX5UC-32MT/DSS, FX5UC-64MT/DSS, FX5UC-96MT/DSS
Output module	FX5-C16EYT/DSS, FX5-C32EYT/DSS
I/O module	FX5-C32ET/DSS

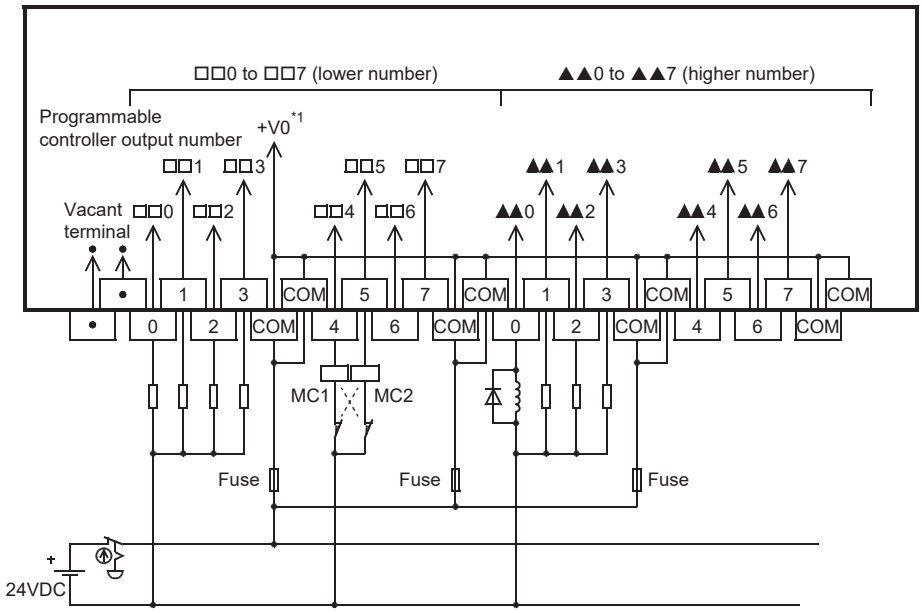

*1 Replace this number with the one of the connected connector.

FX-16EYR-TB, FX-16EYR-ES-TB/UL

Connected module	Model	
	For the FX-16EYR-TB	For the FX-16EYR-ES-TB/UL
FX5UC CPU module	FX5UC-32MT/D, FX5UC-64MT/D, FX5UC-96MT/D	FX5UC-32MT/DSS, FX5UC-64MT/DSS, FX5UC-96MT/DSS
Output module	FX5-C16EYT/D, FX5-C32EYT/D	FX5-C16EYT/DSS, FX5-C32EYT/DSS
I/O module	FX5-C32ET/D	FX5-C32ET/DSS

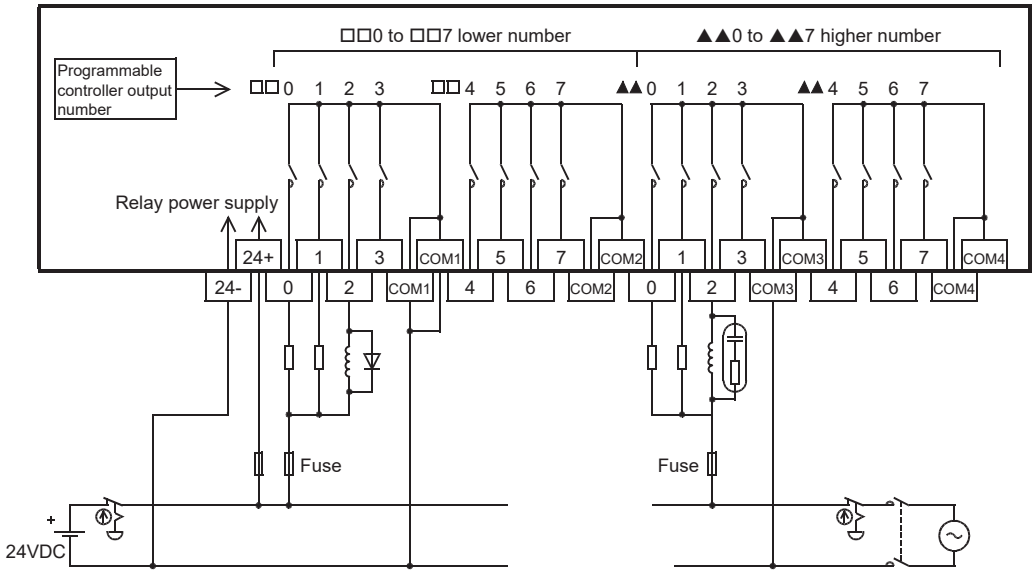

- For external wiring precautions, refer to ☞ Page 212 Wiring precautions.
- For the life of a relay output contact, refer to ☞ Page 207 Product life of relay output contacts.

FX-16EYT-TB

Connected module	Model
FX5UC CPU module	FX5UC-32MT/D, FX5UC-64MT/D, FX5UC-96MT/D
Output module	FX5-C16EYT/D, FX5-C32EYT/D
I/O module	FX5-C32ET/D

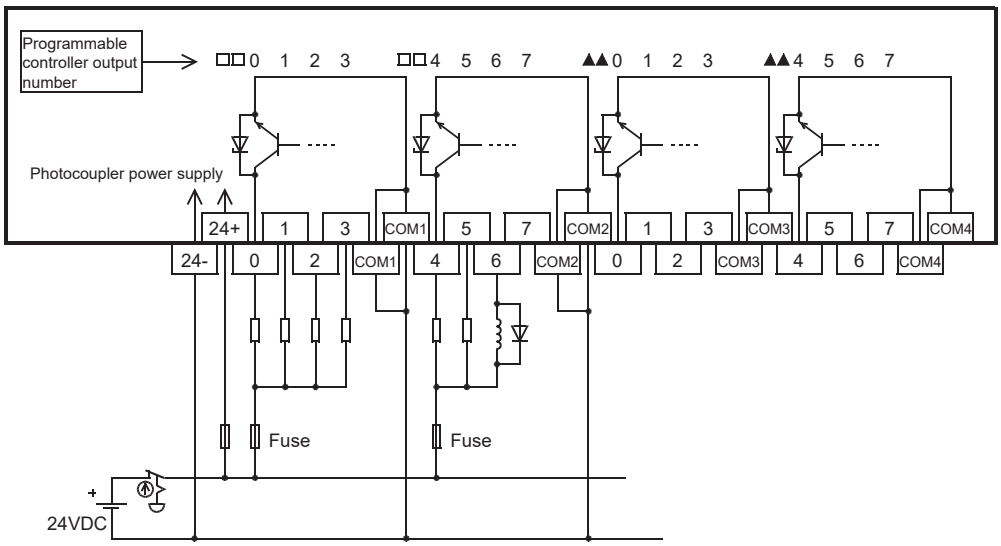

- For external wiring precautions, refer to ☞ Page 212 Wiring precautions.

FX-16EYT-ES-TB/UL

Connected module	Model
FX5UC CPU module	FX5UC-32MT/DSS, FX5UC-64MT/DSS, FX5UC-96MT/DSS
Output module	FX5-C16EYT/DSS, FX5-C32EYT/DSS
I/O module	FX5-C32ET/DSS

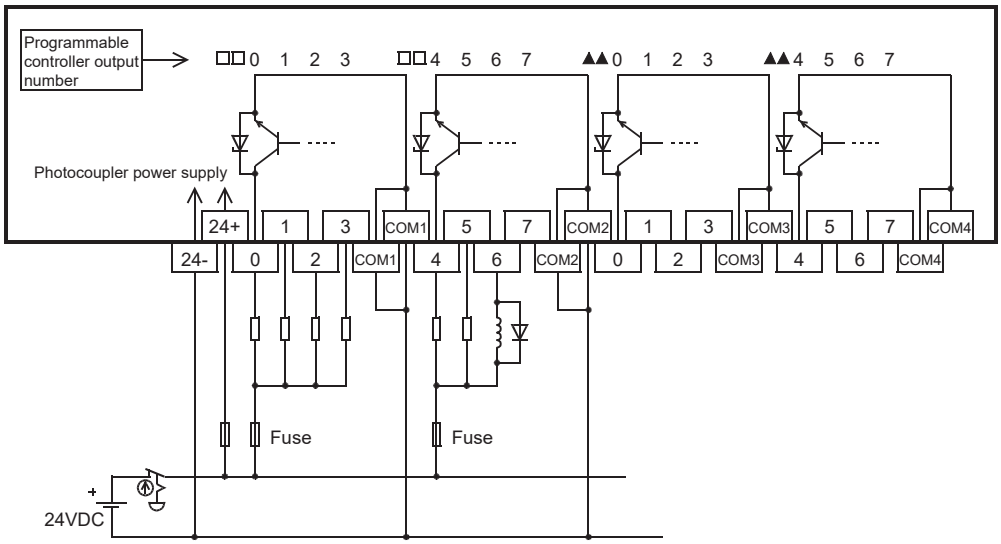

- For external wiring precautions, refer to ☞ Page 212 Wiring precautions.

FX-16EYT-ESS-TB/UL

Connected module	Model
FX5UC CPU module	FX5UC-32MT/DSS, FX5UC-64MT/DSS, FX5UC-96MT/DSS
Output module	FX5-C16EYT/DSS, FX5-C32EYT/DSS
I/O module	FX5-C32ET/DSS

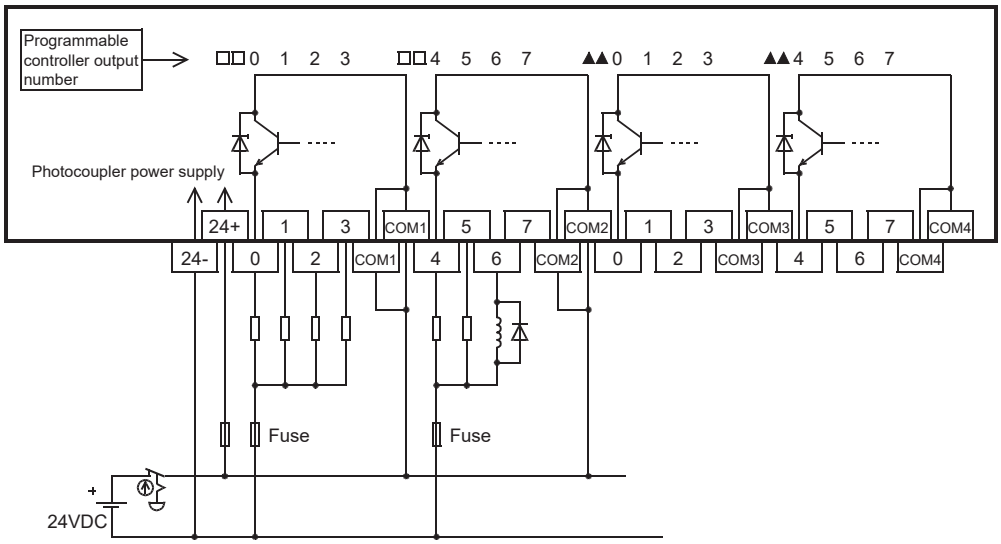

- For external wiring precautions, refer to ☞ Page 212 Wiring precautions.

FX-16EYS-TB

Connected module	Model
FX5UC CPU module	FX5UC-32MT/D, FX5UC-64MT/D, FX5UC-96MT/D
Output module	FX5-C16EYT/D, FX5-C32EYT/D
I/O module	FX5-C32ET/D

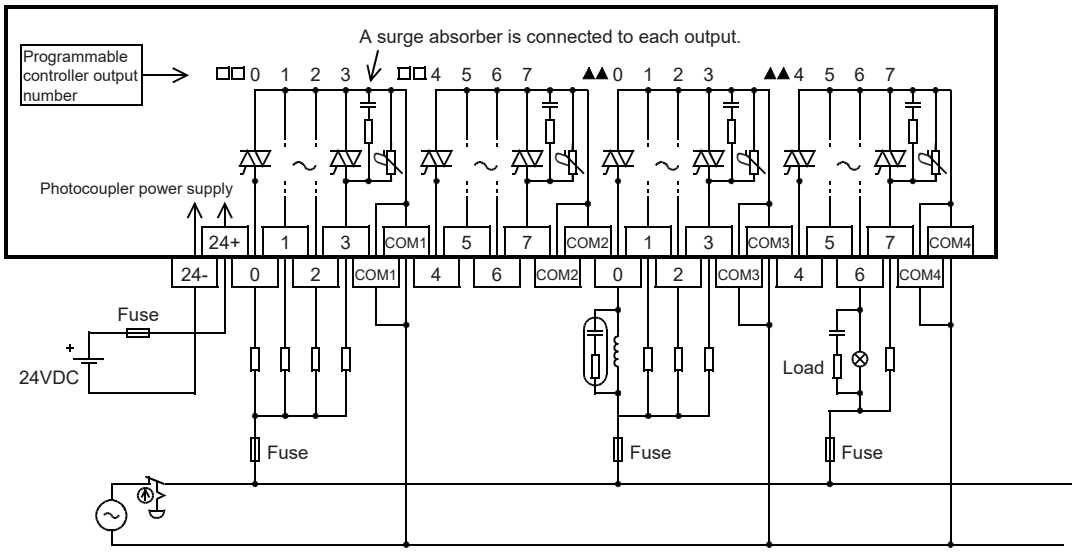

- For external wiring precautions, refer to ☞ Page 212 Wiring precautions.

FX-16EYS-ES-TB/UL

Connected module	Model
FX5UC CPU module	FX5UC-32MT/DSS, FX5UC-64MT/DSS, FX5UC-96MT/DSS
Output module	FX5-C16EYT/DSS, FX5-C32EYT/DSS
I/O module	FX5-C32ET/DSS

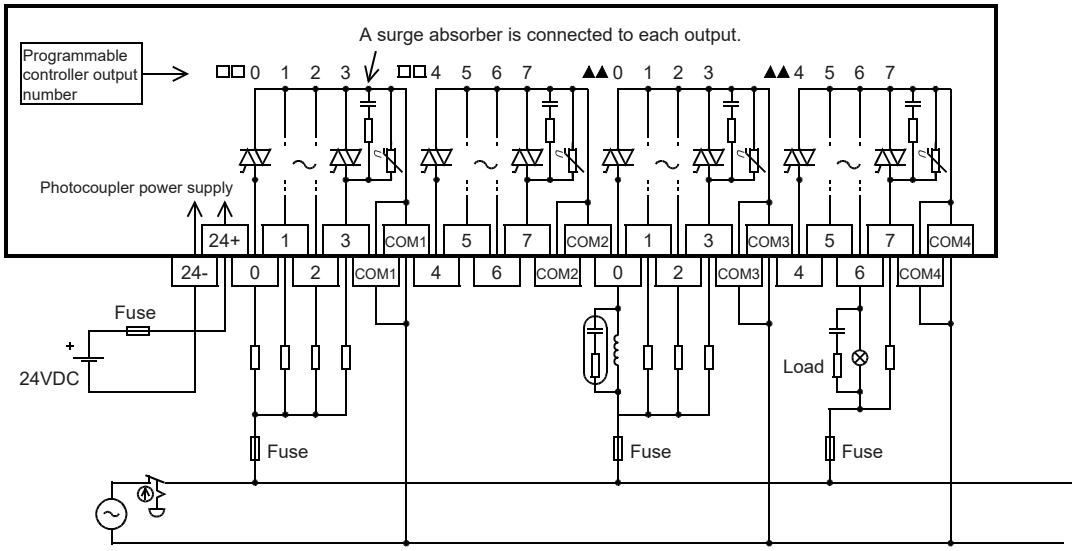

- For external wiring precautions, refer to ☞ Page 212 Wiring precautions.

15.7 Analog Wiring

Wiring to the analog I/O terminals is explained below.

For specifications of the analog I/O terminals, refer to the following.

MELSEC iQ-F FX5 User's Manual (Application)

CPU module built-in analog function

Analog input wiring

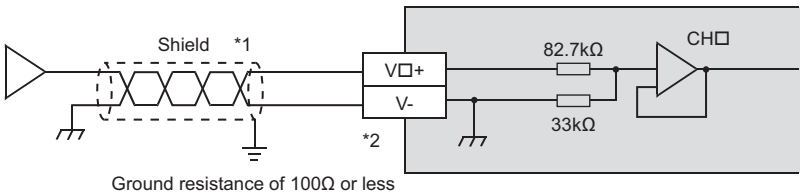

CH No. goes in □ of V□+, CH□.

*1 For analog input wiring, use shielded twisted-pair cables (double-core type). Separate them from other power lines or lines which are susceptible to an induction.

*2 For unused channels, short-circuit the "V□+" and "V-" terminals.

When using the wiring for a current input, refer to the following.

MELSEC iQ-F FX5 User's Manual (Application)

Analog output wiring

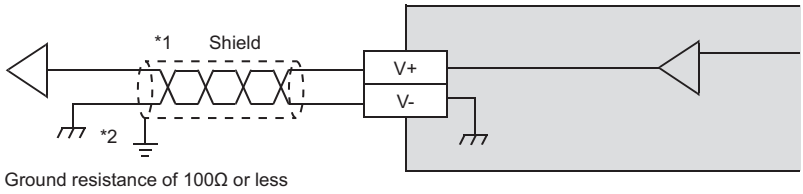

*1 For analog output wiring, use shielded twisted-pair cables (double-core type). Separate them from other power lines or lines which are susceptible to an induction.

*2 Ground a shielded cable at one point on the signal receiving side.

Analog adapter

Power supply wiring

The following figures show a wiring example for the power supply of the FX5-4A-ADP and FX5-4DA-ADP.

[When a service power supply is used]

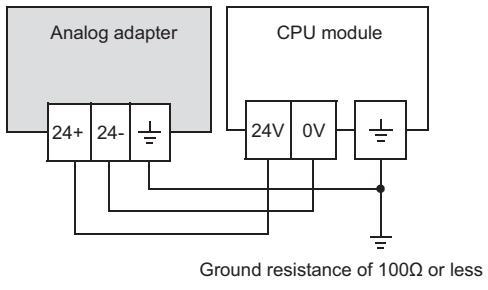

[When an external power supply is used]

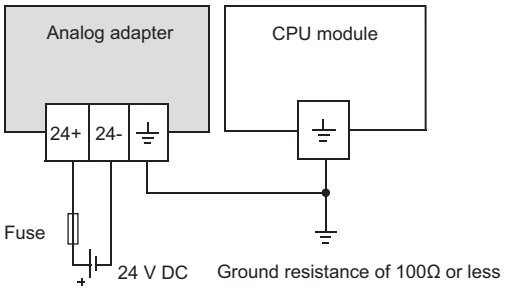

Precautions

- Connect the analog adapter ground terminal as well as the CPU module ground terminal to the grounding wire of the power supply on which a ground resistance of 100Ω or less is provided.
- When using an external power supply, power on the external power supply and the CPU module at the same time, or power on the external power supply first and then the CPU module. When powering off the external power supply, ensure system safety, and power off the external power supply and the programmable controller (including the expansion adapter) at the same time.
- Note that an analog ADP power supply error (error code: 3081H) may occur when the power is turned off.

Analog input wiring

The following figures show wiring of the analog input.

• FX5-4A-ADP

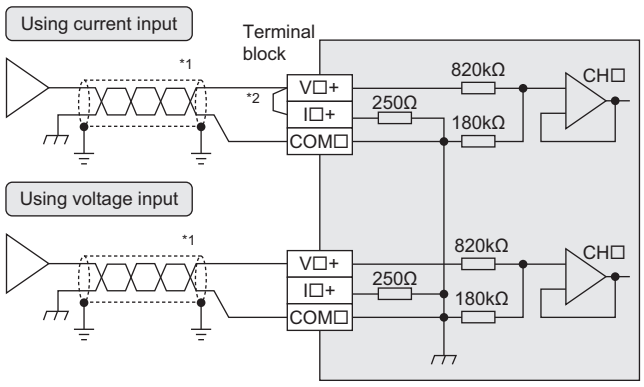

• FX5-4AD-ADP

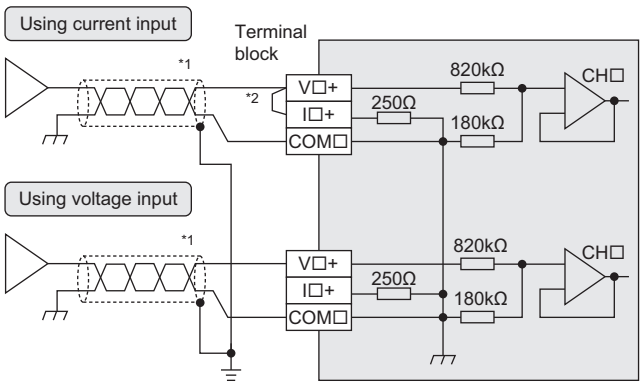

V□+, I□+, COM□, CH□: □ represents the channel number.

For the FX5-4A-ADP, use channel 1 and 2.

*1 For analog input wiring, use shielded twisted-pair cables (double-core type). Separate them from other power lines or lines which are susceptible to an induction.

*2 Make sure to connect the 'V□+' and 'I□+' terminals when the current is input.

Analog output wiring

The following figures show wiring of the analog output.

• FX5-4A-ADP

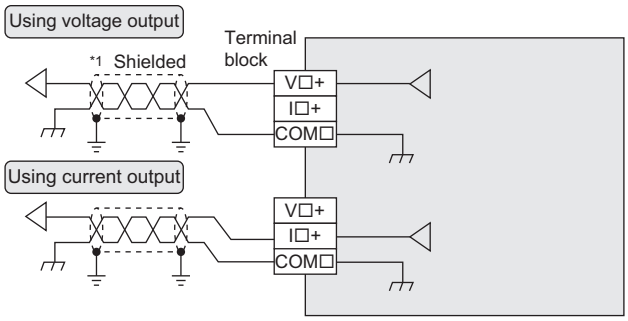

• FX5-4DA-ADP

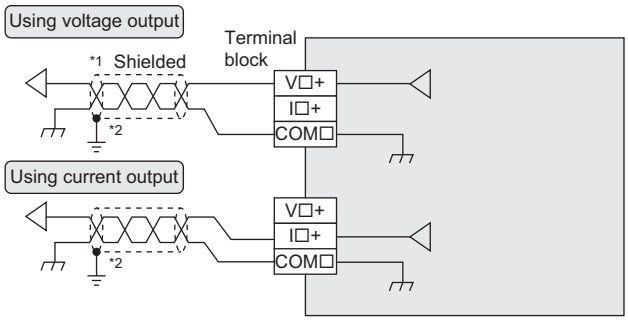

V□+, I□+, COM□, CH□: □ represents the channel number.

For the FX5-4A-ADP, use channel 3 and 4.

*1 For analog output wiring, use shielded twisted-pair cables (double-core type). Separate them from other power lines or lines which are susceptible to an induction.

*2 Ground a shielded cable at one point on the signal receiving side.

Wiring of resistance temperature detector

The following figures show wiring of the resistance temperature detector.

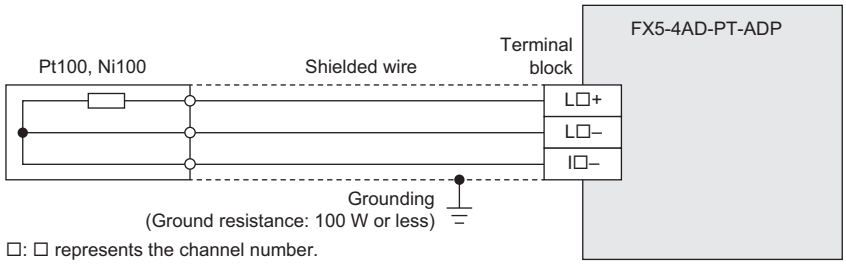

□: □ represents the channel number.

Point

- Only 3 wire Pt100 and Ni100 resistance temperature detectors can be used.
- Separate the cable of the resistance thermometer detector from other power cables or areas easily affected by inductive noise (from commercial power, etc.).

Wiring of thermocouple

The following figures show wiring of the thermocouple.

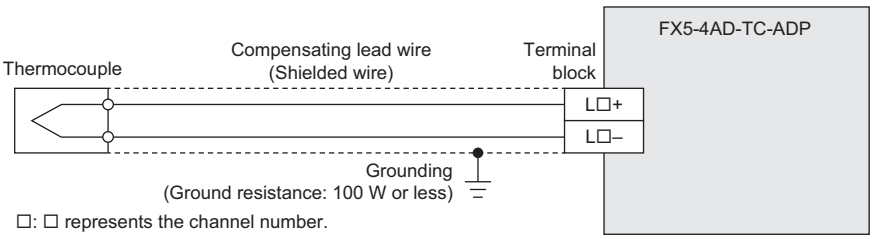

□: □ represents the channel number.

Point

Separate the cable of the resistance thermometer detector from other power cables or areas easily affected by inductive noise (from commercial power, etc.).

■Selection of the thermocouple

- Thermocouple type

There are 6 types of thermocouples: K, J, T, B, R, and S type.

Use insulated thermocouple types.

- Compensating lead wire

When the thermocouple is extended, use compensating lead wire that is suitable for the type.

The influence of wiring resistance of thermocouple and compensating lead wire is approximately -0.083 μV/Ω.

15.8 Wiring Examples for Various Uses

Notes about wiring examples

The wiring examples are given under the following conditions.

■Input/output number

The input/output numbers are the actual numbers on the program. (They may differ from the numbers shown on the product terminals.)

■Input/output specifications of products

Check the input/output specifications of products and wiring examples.
There are products for sink output and for source output.

■Program example

The program examples (instructions) are given based on the assignment of I/O numbers for wiring.
For descriptions of the instructions, refer to the following.
MELSEC iQ-F FX5 Programming Manual (Instructions, Standard Functions/Function Blocks)

Positioning function

For wiring examples for the positioning function, refer to the following.
MELSEC iQ-F FX5 User's Manual (Application)

Communication function

For wiring of the built-in Ethernet communication connector, built-in RS-485 communication terminal block, communication boards and communication adapters, refer to the following.
MELSEC iQ-F FX5 User's Manual (Communication)

High-speed counter

Wiring examples for high-speed counters are shown below.

When capturing pulses of a response frequency of 50 to 100kHz for the FX5S/FX5UJ CPU modules or 50 to 200kHz for the FX5U/FX5UC CPU modules, refer to the following.

☞ Page 197 When capturing high-speed pulses

1-phase 1-input (software)

The wiring examples in this section use the following settings. When settings other than those in the table are used, use the examples shown in the following figures as references for wiring.

Item	Setting details
CH to be used	CH1 (CPU module) or CH9 (high-speed pulse input/output module)
Pulse input mode	1-phase 1-input (software)
External preset input	Disable
External enable input	Disable
Operation mode	Normal mode

The settings of the high-speed counters are set by using the parameter settings of the engineering tool.

For details, refer to 🕮MELSEC iQ-F FX5 User's Manual (Application).

■Wiring example

NPN open collector transistor output rotary encoder

Sink wiring

• When using the input of FX5U-32MT/ES

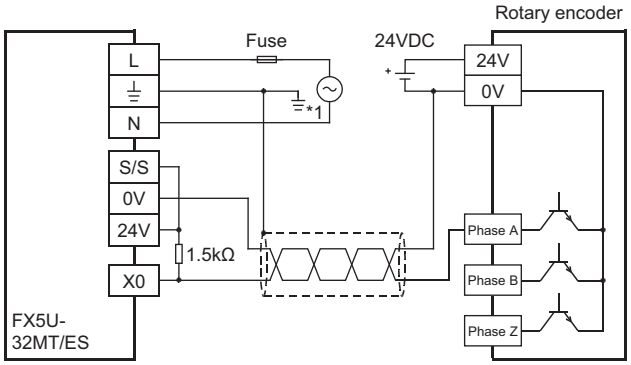

• When using the input of FX5-16ET/ES-H

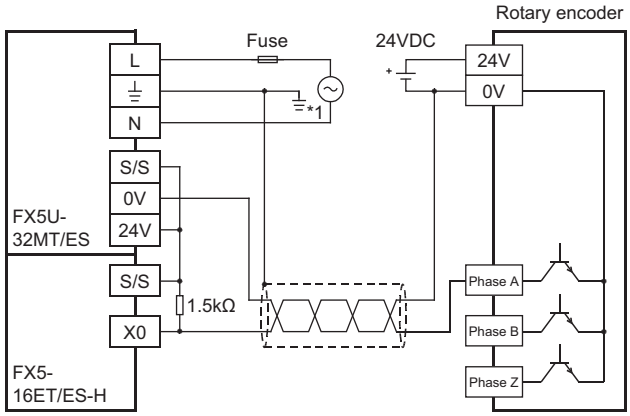

• For FX5UC-32MT/D

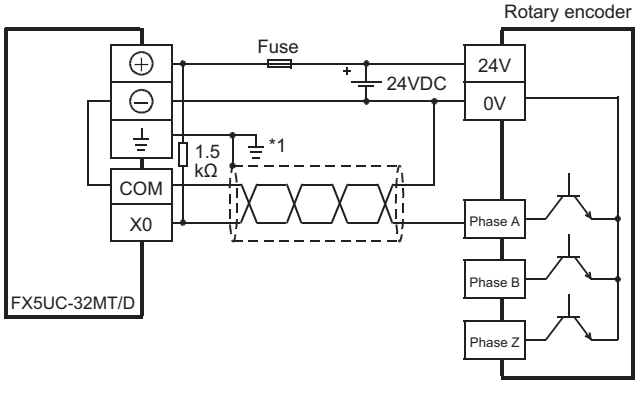

• For FX5-16ET/ES-H

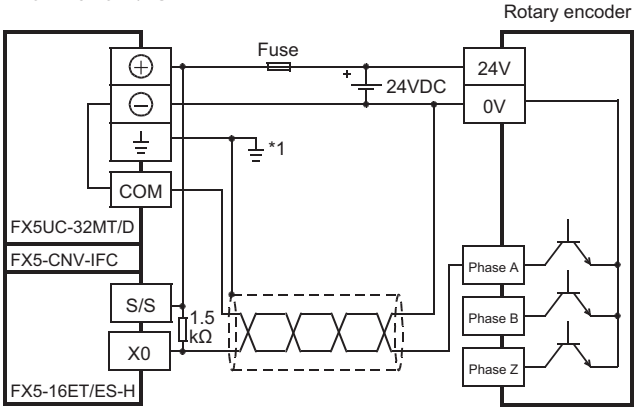

*1 Provide a ground resistance of 100Ω or less.

• For FX5UC-32MT/DSS [sink input wiring]

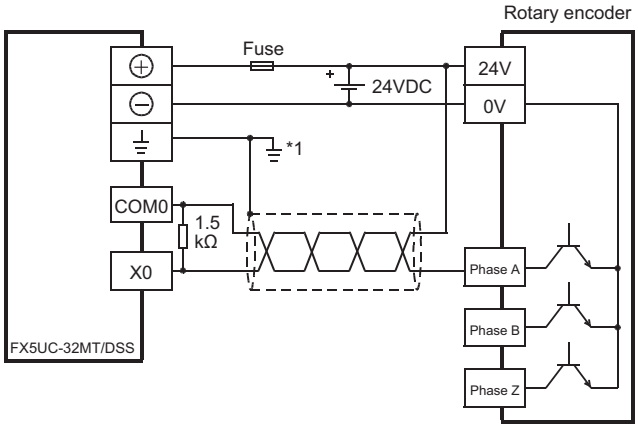

• For FX5-16ET/ESS-H

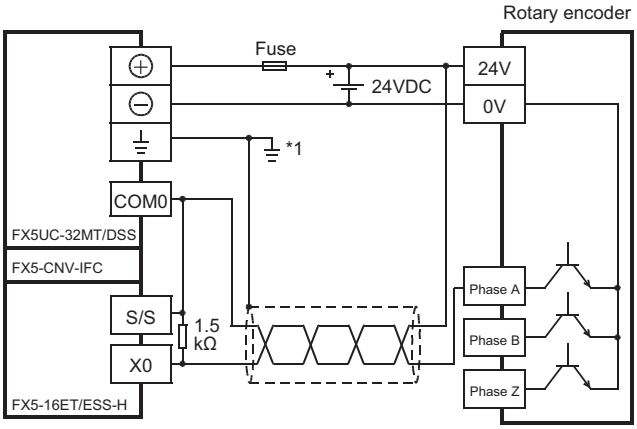

*1 Provide a ground resistance of 100Ω or less.

PNP open collector transistor output rotary encoder

Source wiring

• When using the input of FX5U-32MT/ESS

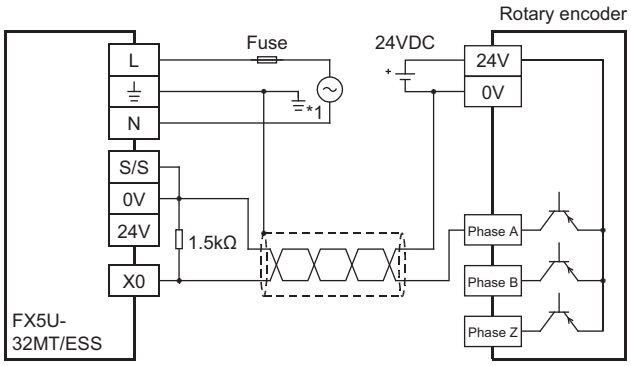

• When using the input of FX5-16ET/ESS-H

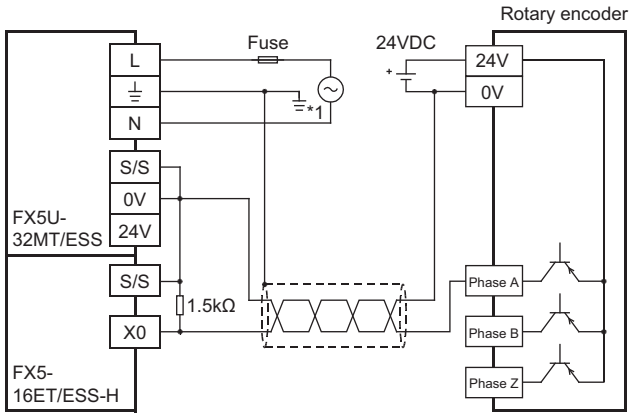

• For FX5UC-32MT/DSS [source input wiring]

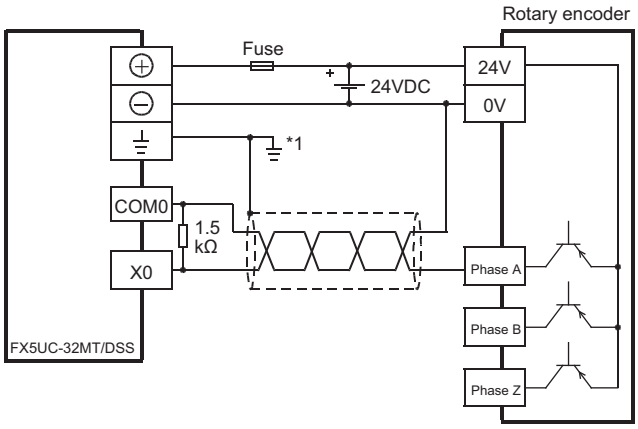

• For FX5-16ET/ESS-H

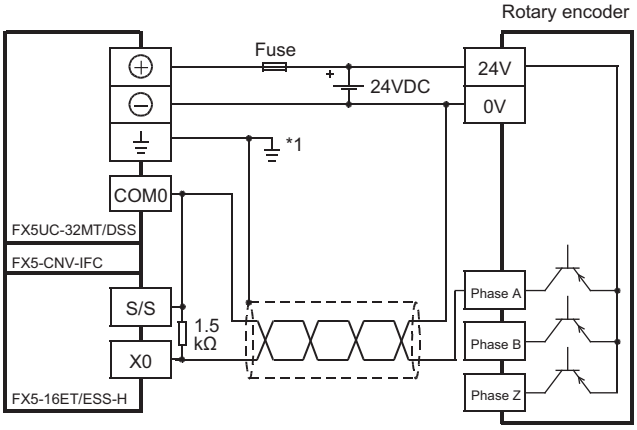

*1 Provide a ground resistance of 100Ω or less.

■Wiring example (when 24VDC external power supply is used)

NPN open collector transistor output rotary encoder

Sink wiring

• When using the input of FX5U-32MT/ES

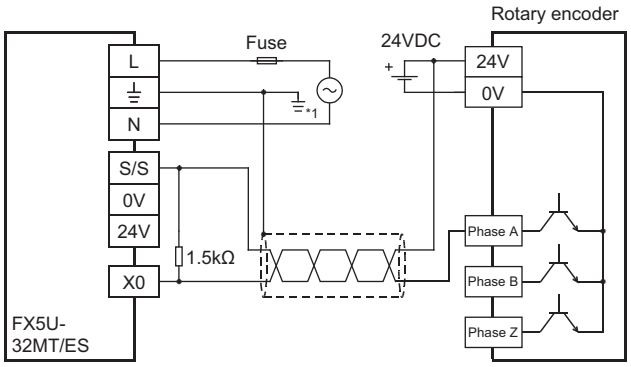

• When using the input of FX5-16ET/ES-H

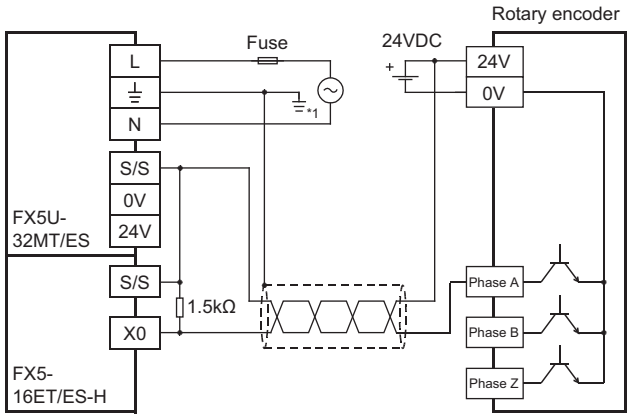

PNP open collector transistor output rotary encoder

Source wiring

• When using the input of FX5U-32MT/ESS

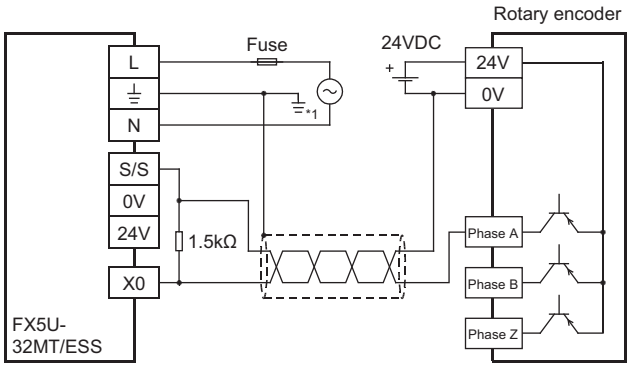

• When using the input of FX5-16ET/ESS-H

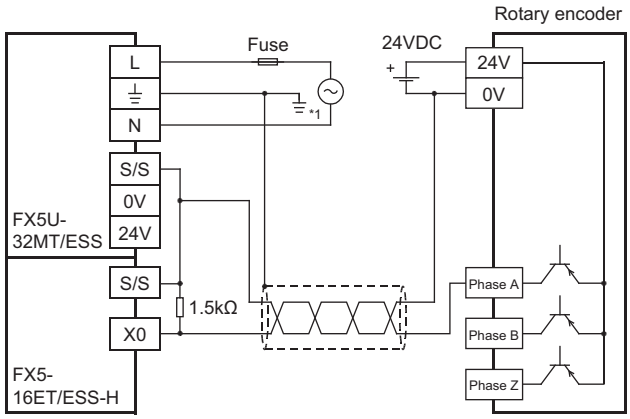

*1 Provide a ground resistance of 100Ω or less.

2-phase 2-input

The wiring examples in this section use the following settings. When settings other than those in the table are used, use the examples shown in the following figures as references for wiring.

Item	Setting details
CH to be used	CH2 (CPU module) or CH10 (high-speed pulse input/output module)
Pulse input mode	2-phase 2-input
External preset input	Disable
External enable input	Disable
Operation mode	Normal mode

The settings of the high-speed counters are set by using the parameter settings of the engineering tool.
For details, refer to MELSEC iQ-F FX5 User's Manual (Application).

■Wiring example

NPN open collector transistor output rotary encoder

Sink wiring

・When using the input of FX5U-32MT/ES

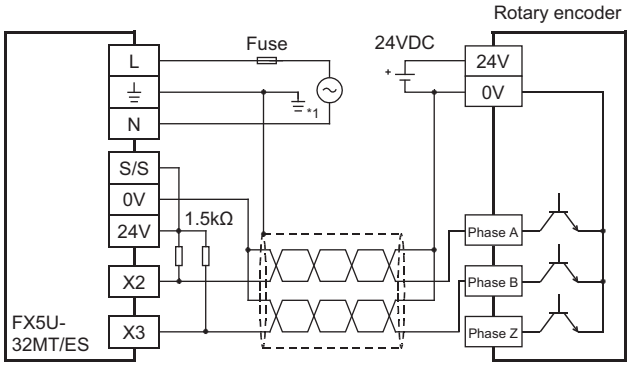

・When using the input of FX5-16ET/ES-H

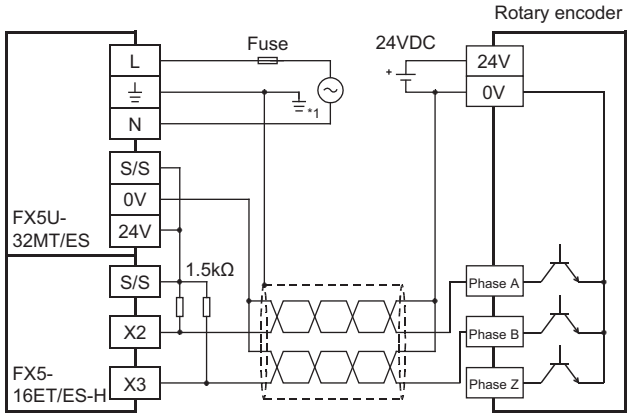

・For FX5UC-32MT/D

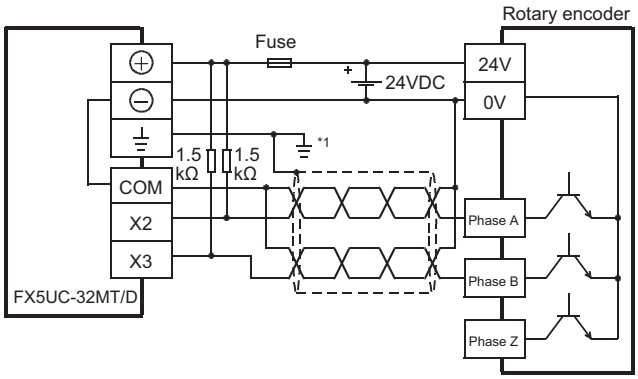

・For FX5-16ET/ES-H

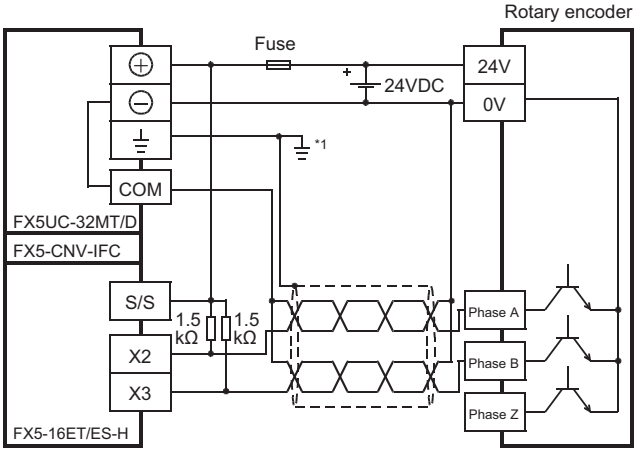

*1 Provide a ground resistance of 100Ω or less.

• For FX5UC-32MT/DSS [sink input wiring]

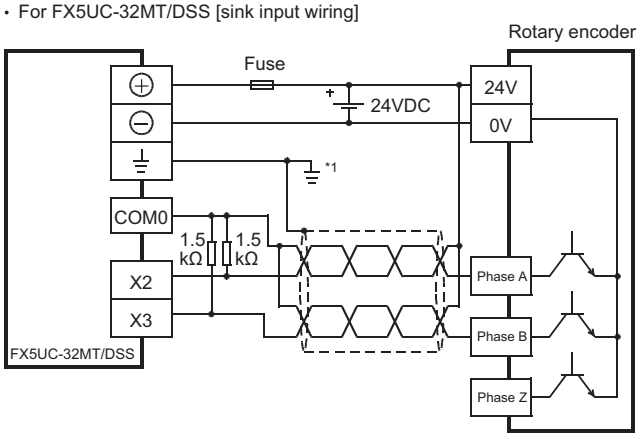

• For FX5-16ET/ESS-H

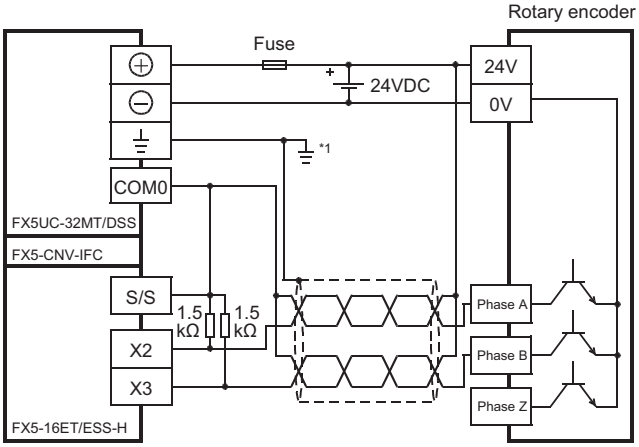

*1 Provide a ground resistance of 100Ω or less.

PNP open collector transistor output rotary encoder

Source wiring

• When using the input of FX5U-32MT/ESS

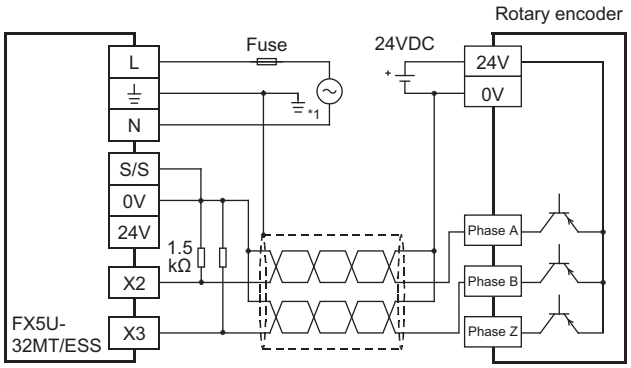

• When using the input of FX5-16ET/ESS-H

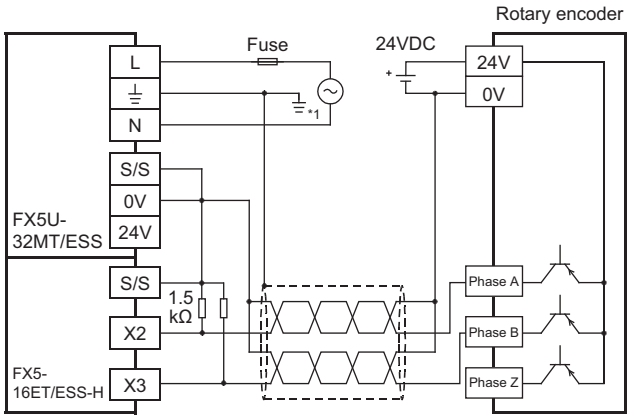

• For FX5UC-32MT/DSS [source input wiring]

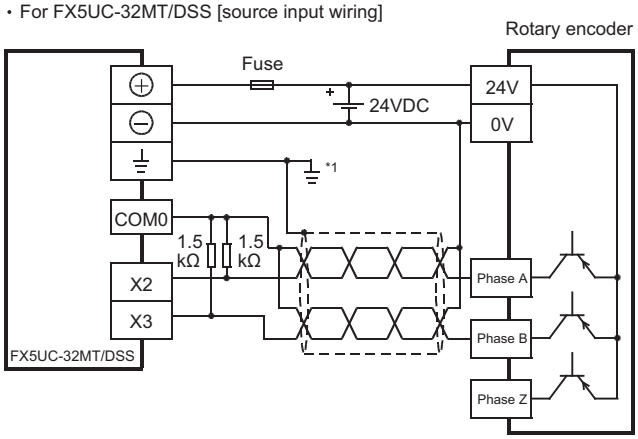

• For FX5-16ET/ESS-H

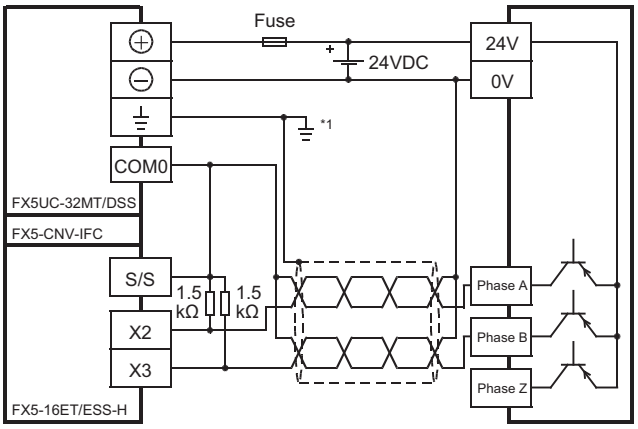

*1 Provide a ground resistance of 100Ω or less.

■Wiring example (when 24VDC external power supply is used)

NPN open collector transistor output rotary encoder

Sink wiring

・When using the input of FX5U-32MT/ES

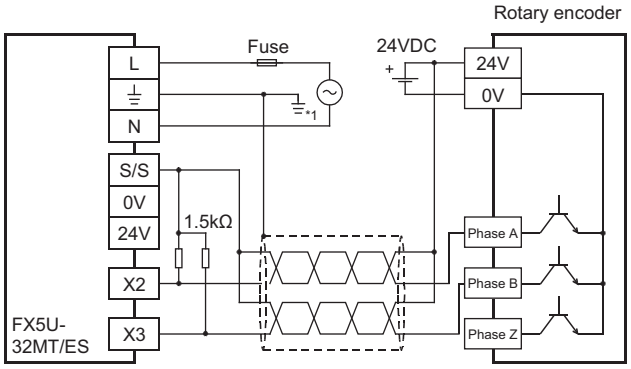

・When using the input of FX5-16ET/ES-H

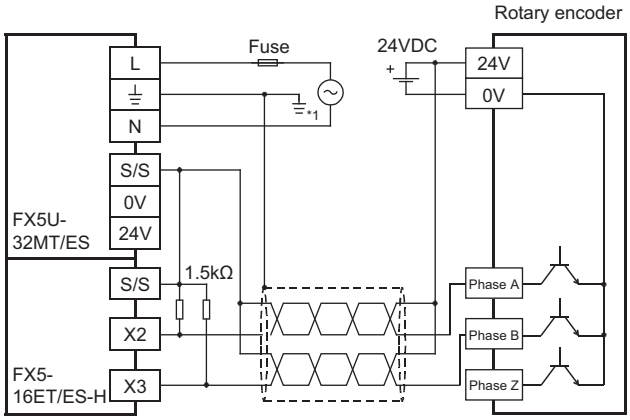

PNP open collector transistor output rotary encoder

Source wiring

・When using the input of FX5U-32MT/ESS

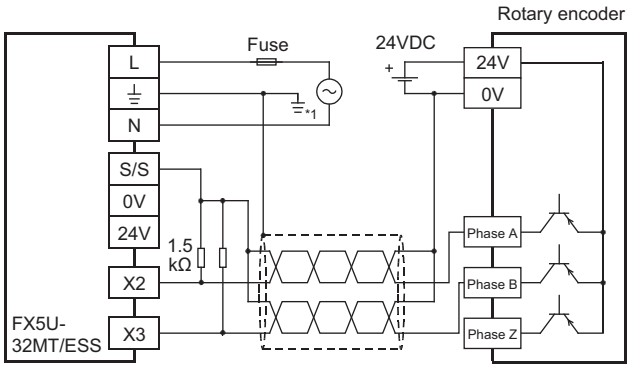

・When using the input of FX5-16ET/ESS-H

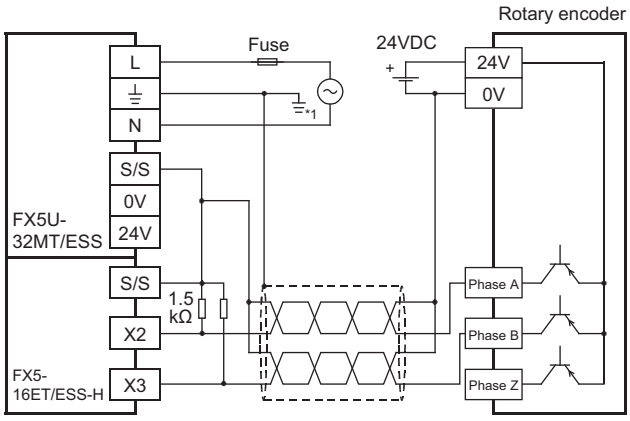

*1 Provide a ground resistance of 100Ω or less.

Interruption

Wiring examples for when the input interruption function is used are shown below.

The same wiring is used for the pulse catch and pulse width measurement functions.

When capturing pulses of a response frequency of 50 to 100kHz for the FX5S/FX5UJ CPU modules or 50 to 200kHz for the FX5U/FX5UC CPU modules, refer to the following.

☞ Page 197 When capturing high-speed pulses

For details on the input interrupt function, pulse catch function, and pulse width measurement function, refer to the following.

📖MELSEC iQ-F FX5 User's Manual (Application)

Wiring example

■When 24VDC service power supply is used

In the case of sink wiring

• Wiring example of FX5U-32MT/ES

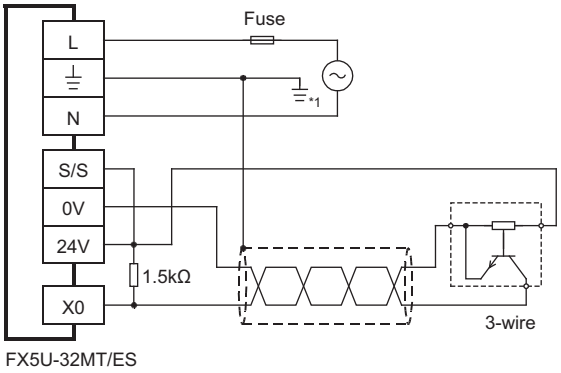

• Wiring example of FX5-16ET/ES-H

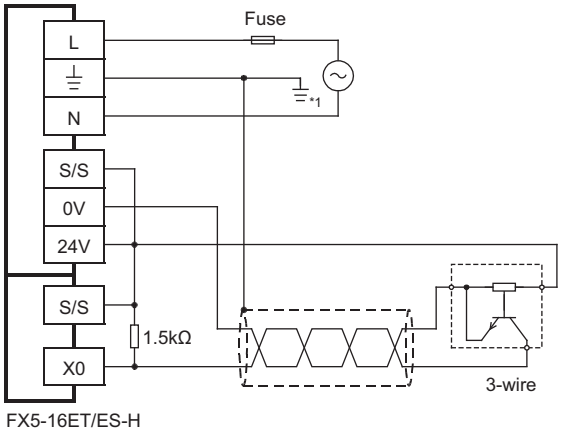

In the case of source wiring

• Wiring example of FX5U-32MT/ESS

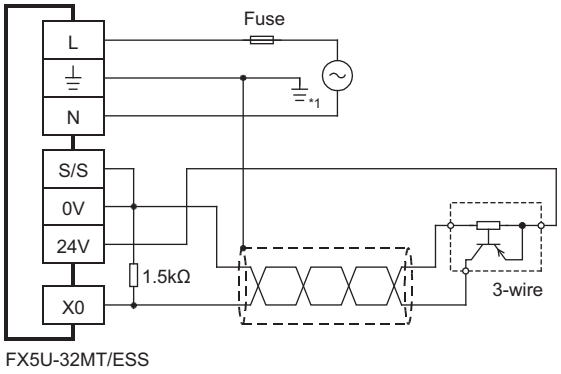

• Wiring example of FX5-16ET/ESS-H

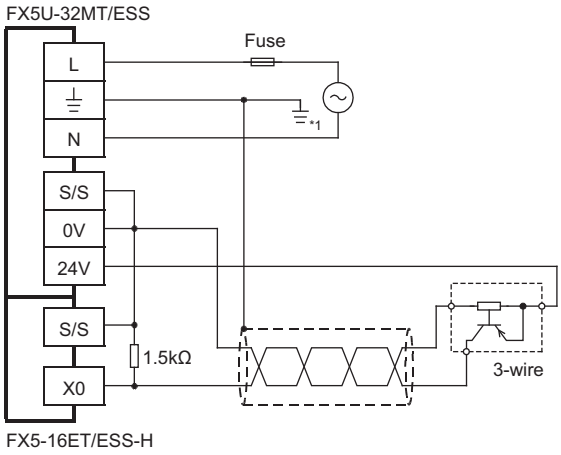

*1 Provide a ground resistance of 100Ω or less.

■When 24VDC external power supply is used

In the case of sink wiring

- Wiring example of FX5U-32MT/ES

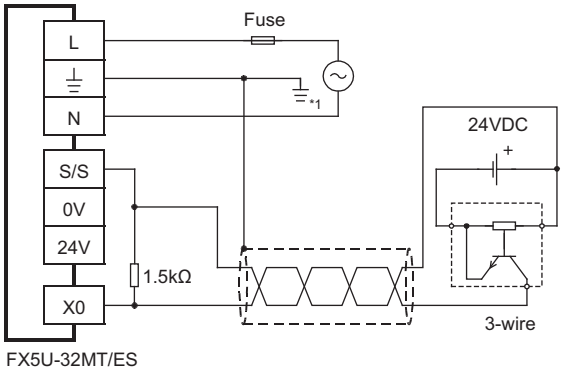

- Wiring example of FX5-16ET/ES-H

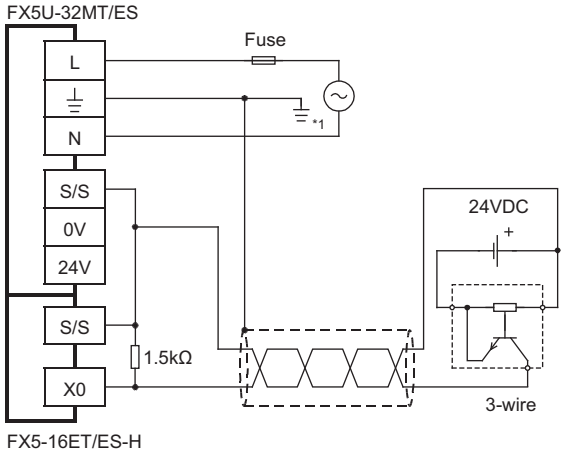

In the case of source wiring

- Wiring example of FX5U-32MT/ESS

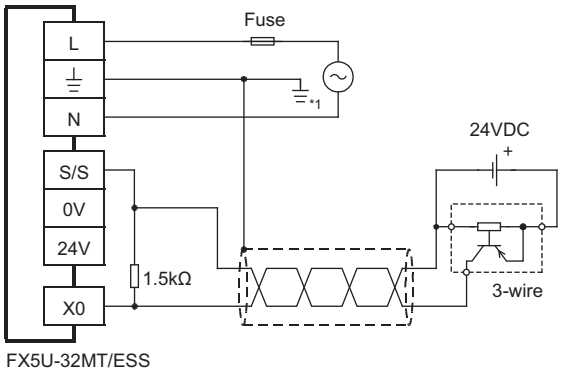

- Wiring example of FX5-16ET/ESS-H

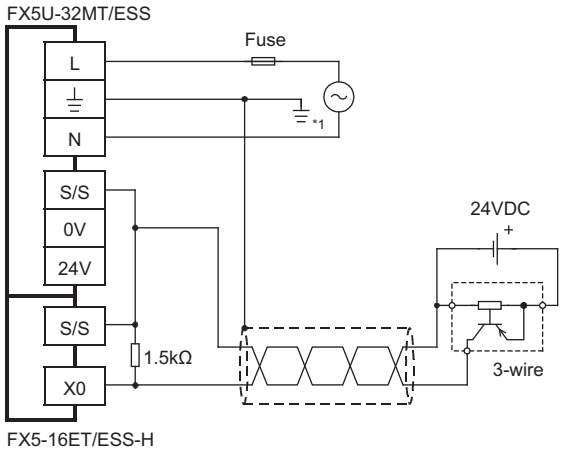

*1 Provide a ground resistance of 100Ω or less.

■NPN open collector transistor output 3-wire sensor

・For FX5UC-32MT/D

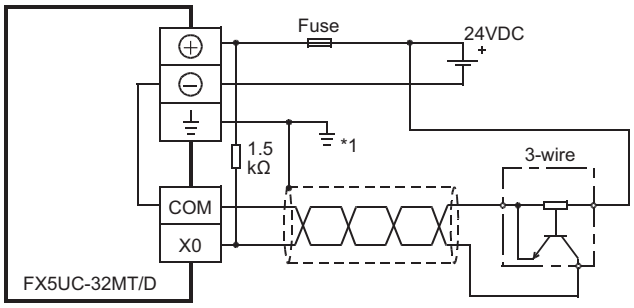

・For FX5-16ET/ES-H

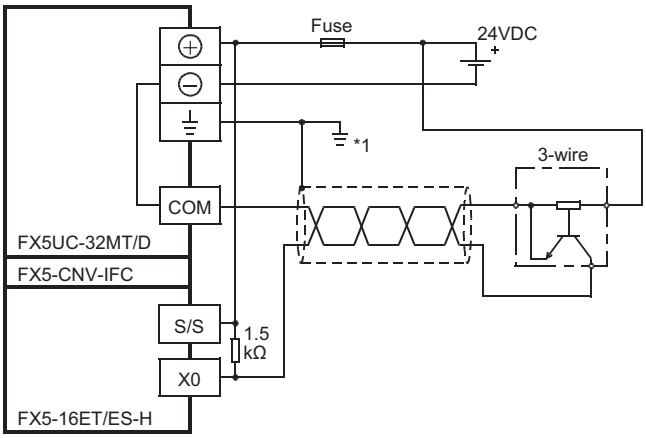

・For FX5UC-32MT/DSS [sink input wiring]

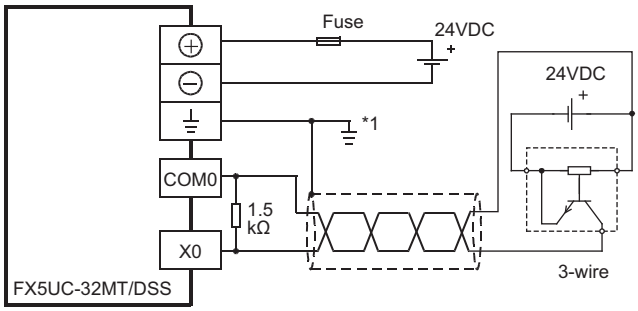

・For FX5-16ET/ESS-H

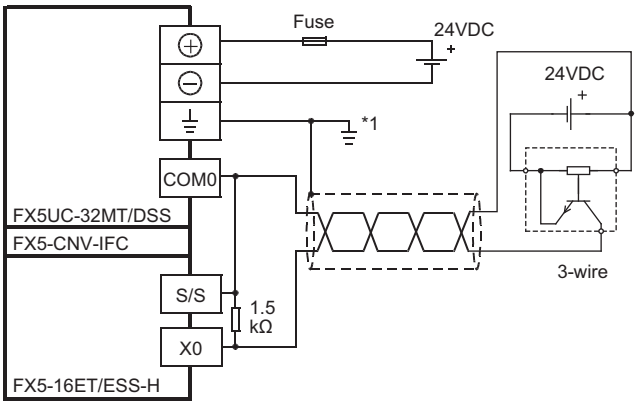

*1 Provide a ground resistance of 100Ω or less.

■PNP open collector transistor output 3-wire sensor

・For FX5UC-32MT/DSS [source input wiring]

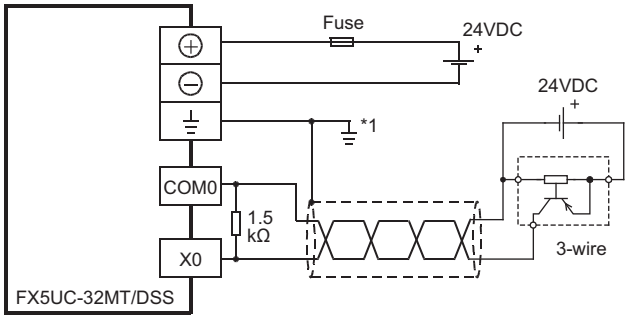

・For FX5-16ET/ESS-H

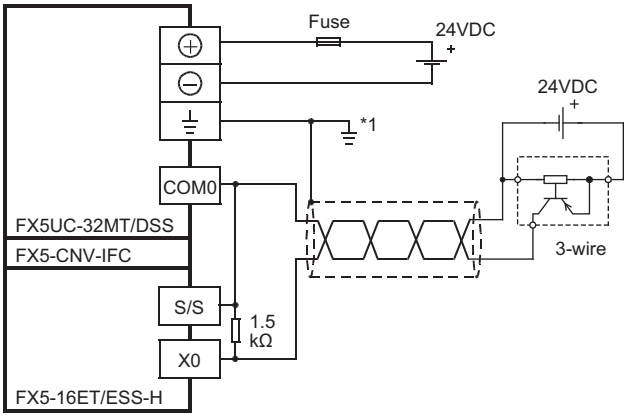

*1 Provide a ground resistance of 100Ω or less.

Digital switch

When DSW instructions are used

Wiring examples for capturing values from a 4-digit digital switch to the data register D100 are given below.

For the instructions, refer to MELSEC iQ-F FX5 Programming Manual (Instructions, Standard Functions/Function Blocks).

■Program example

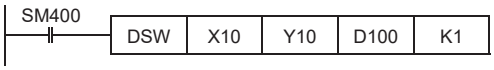

■Wiring example

• Sink wiring

The example is the wiring for the input/output of the FX5U-32MT/ES.

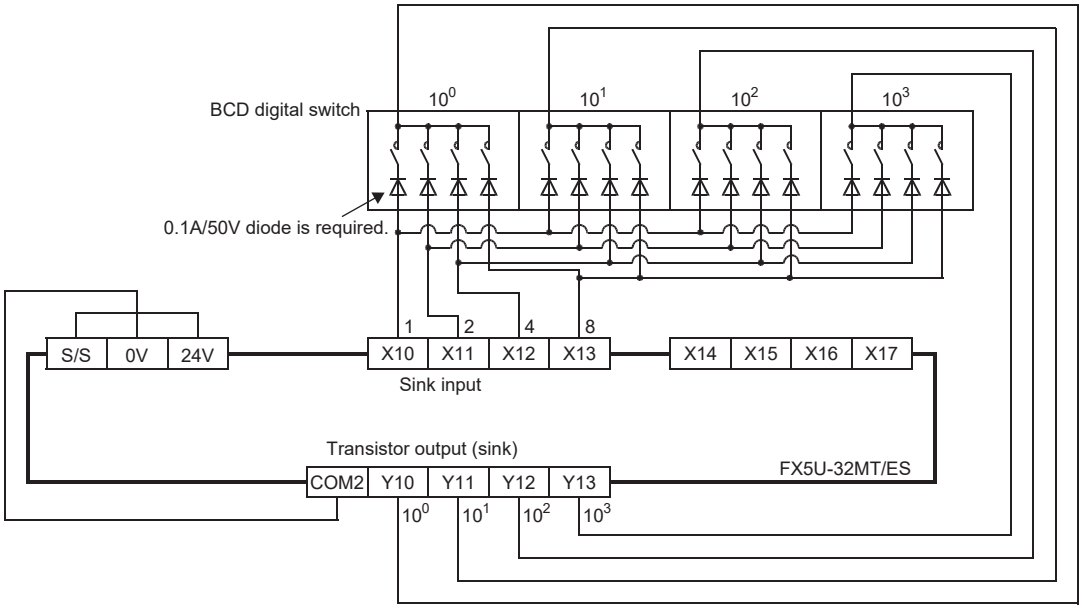

The example is the wiring for the input/output of the FX5UC-32MT/D.

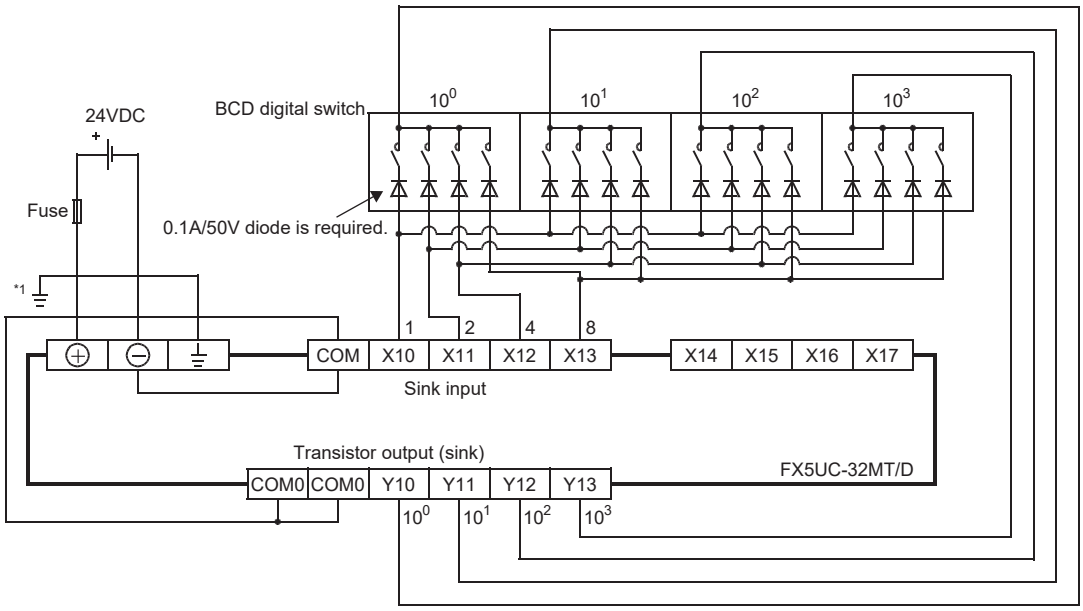

*1 Provide a ground resistance of 100Ω or less.

• Source wiring

The example is the wiring for the input/output of the FX5U-32MT/ESS.

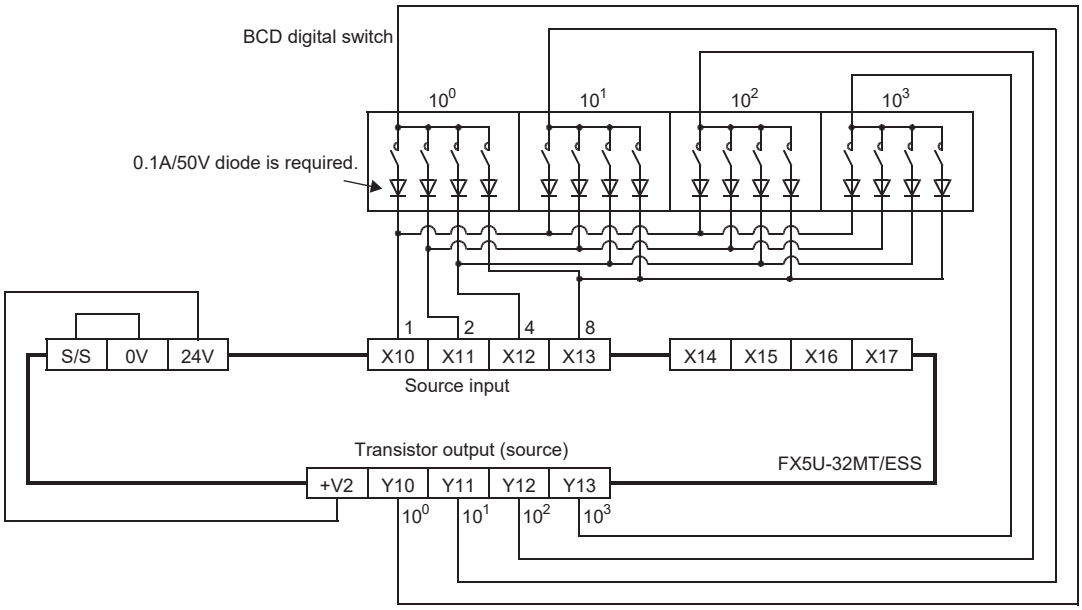

The example is the wiring for the input/output of the FX5UC-32MT/DSS.

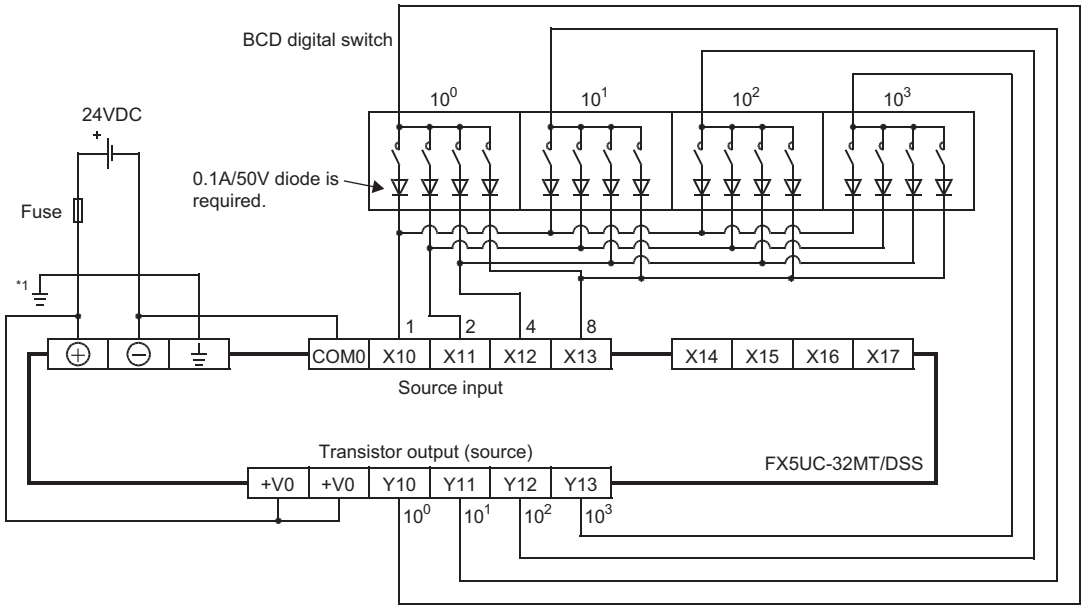

*1 Provide a ground resistance of 100Ω or less.

When BIN instructions are used

Wiring example for capturing values from a 2-digit digital switch to the data register D102 are given below.

For the instructions, refer to MELSEC iQ-F FX5 Programming Manual (Instructions, Standard Functions/Function Blocks).

■Program example



■Wiring example

• Sink wiring

The example is the wiring for the input/output of the FX5U-32MT/ES.

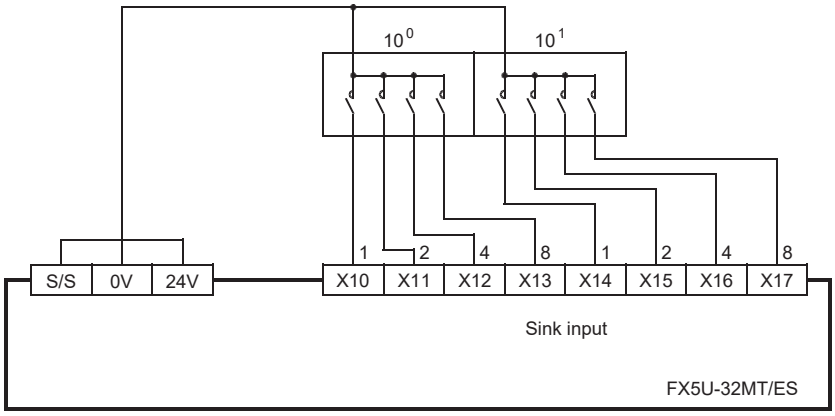

The example is the wiring for the input of the FX5UC-32MT/D.

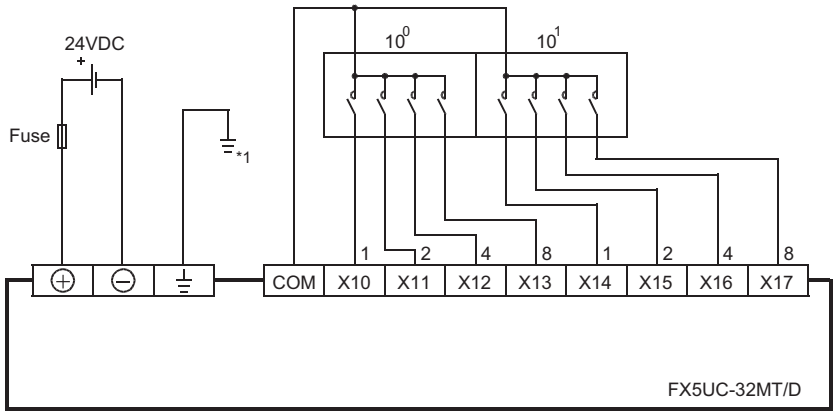

*1 Provide a ground resistance of 100Ω or less.

• Source wiring

The example is the wiring for the input/output of the FX5U-32MT/ESS.

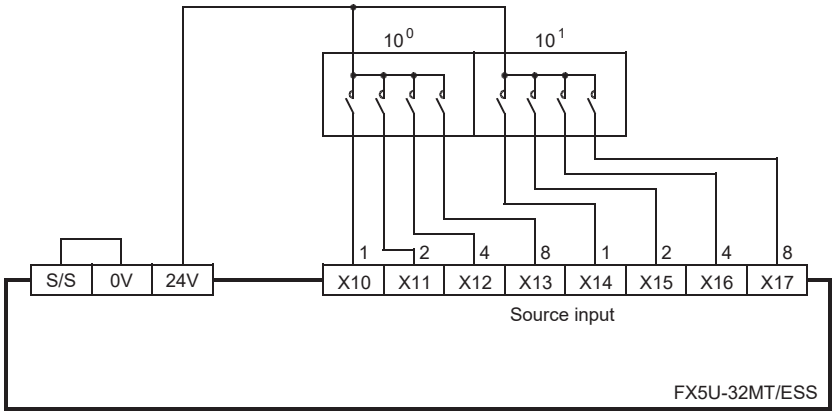

The example is the wiring for the input of the FX5UC-32MT/DSS.

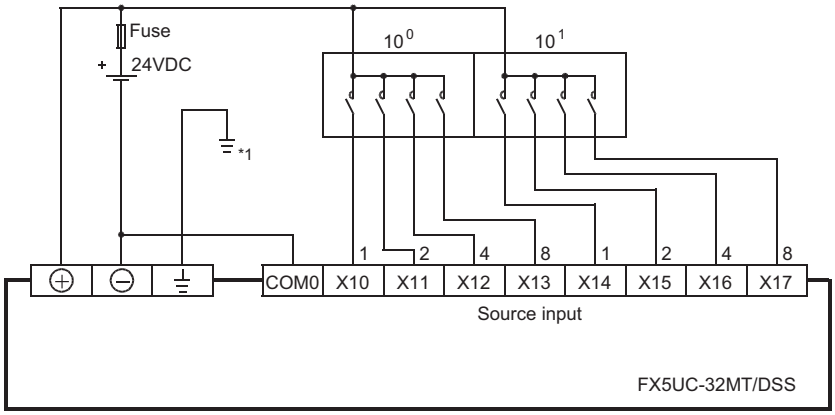

*1 Provide a ground resistance of 100Ω or less.

Input matrix

Wiring examples to take ON/OFF status of 24 switches by using MTR instructions are given below.

For the instructions, refer to MELSEC iQ-F FX5 Programming Manual (Instructions, Standard Functions/Function Blocks).

Program example

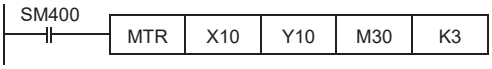

Wiring example

- Sink wiring

The example is the wiring for the input/output of the FX5U-32MT/ES.

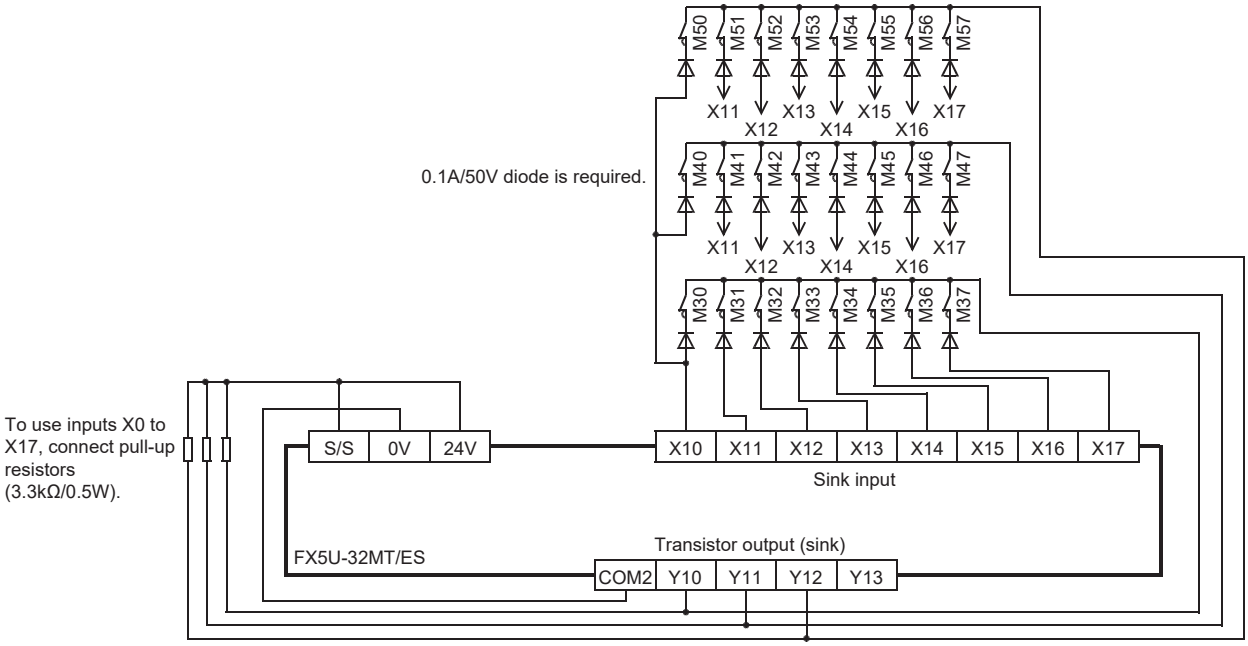

The example is the wiring for the input/output of the FX5UC-32MT/D.

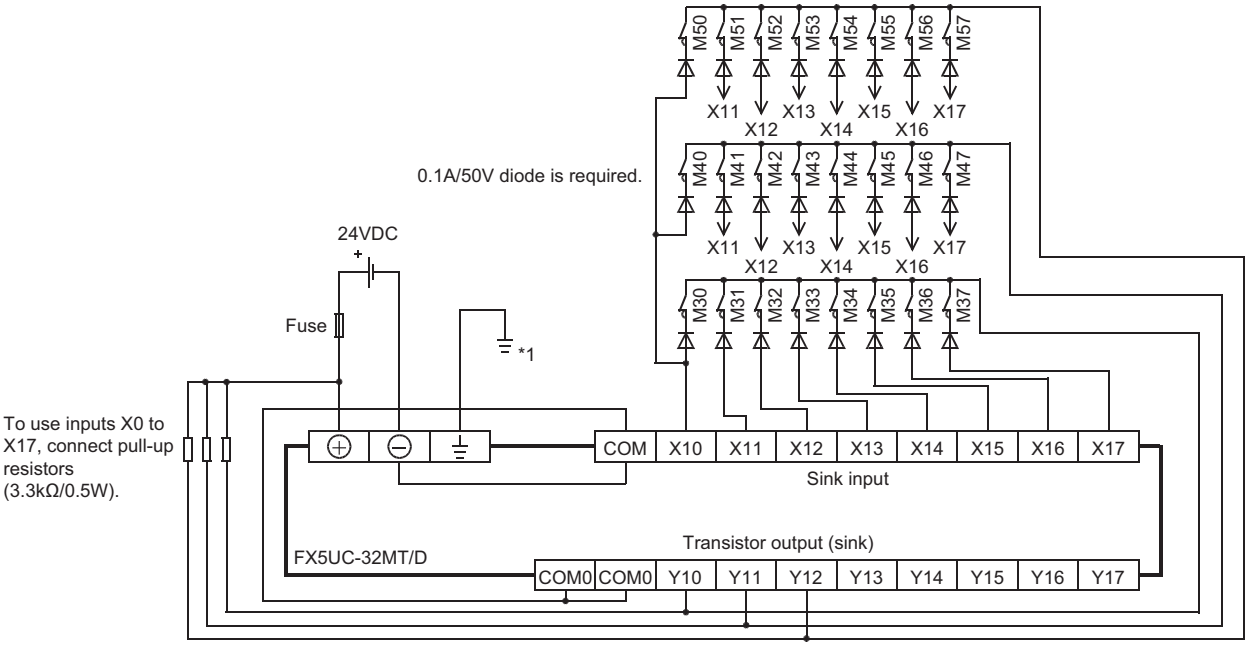

*1 Provide a ground resistance of 100Ω or less.

• Source wiring

The example is the wiring for the input/output of the FX5U-32MT/ESS.

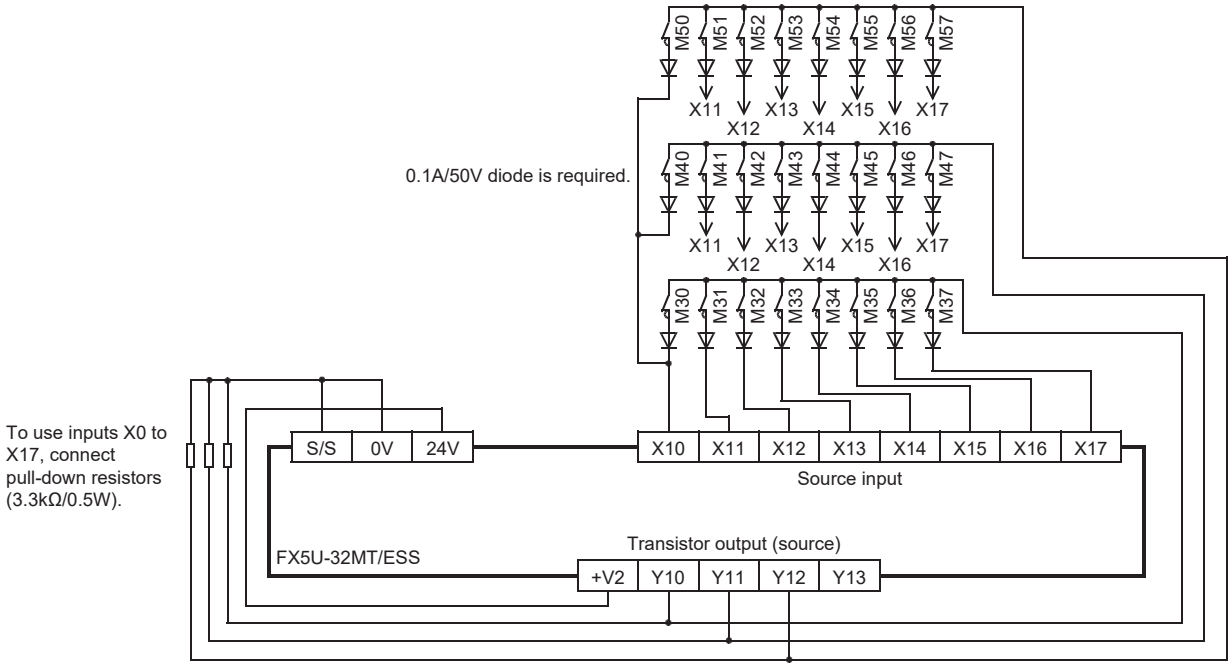

The example is the wiring for the input/output of the FX5UC-32MT/DSS.

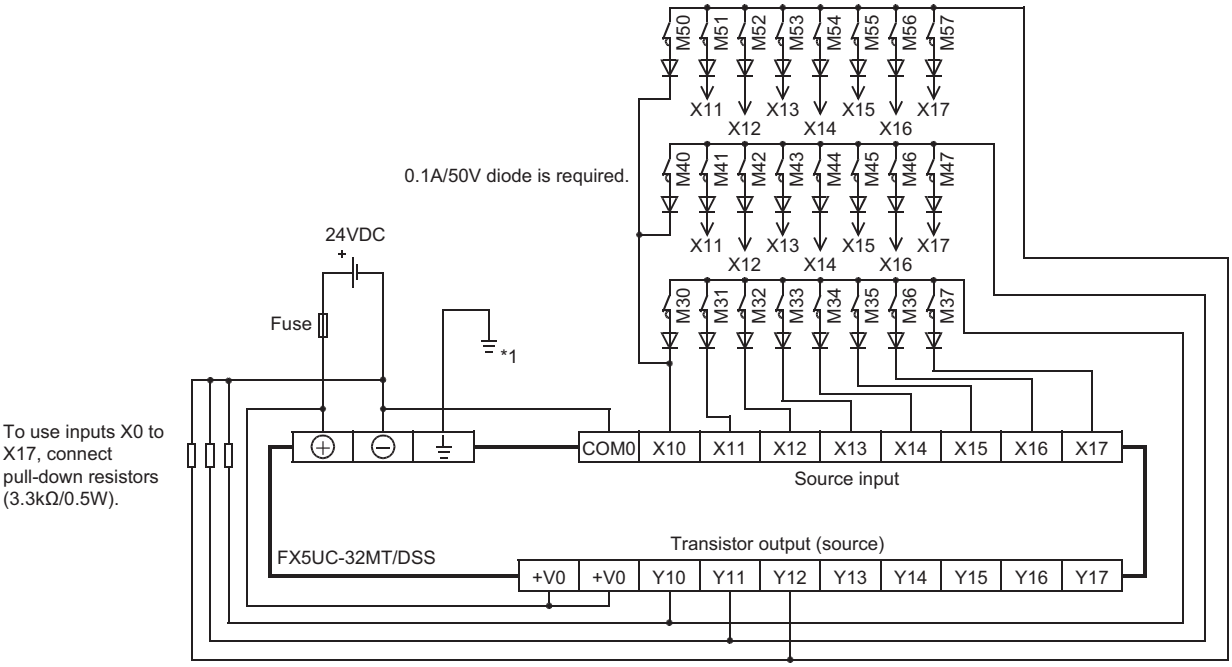

*1 Provide a ground resistance of 100Ω or less.

Seven segment with latch

When SEGL instructions are used

Wiring examples for displaying the current value of D100 on the 4-digit 7-segment display are given below.

For the instructions, refer to MELSEC iQ-F FX5 Programming Manual (Instructions, Standard Functions/Function Blocks).

■Program example

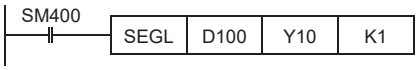

■Wiring example

• Sink wiring

The example is the wiring for the input/output of the FX5U-32MT/ES.

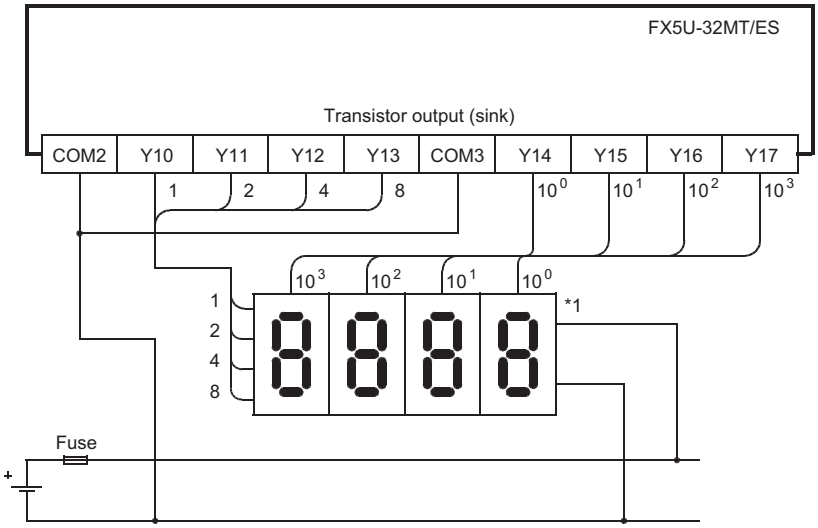

Seven segment with latch used for sink wiring (for transistor output)

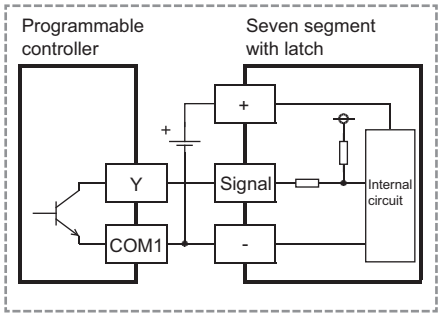

The example is the wiring for the output of the FX5UC-32MT/D.

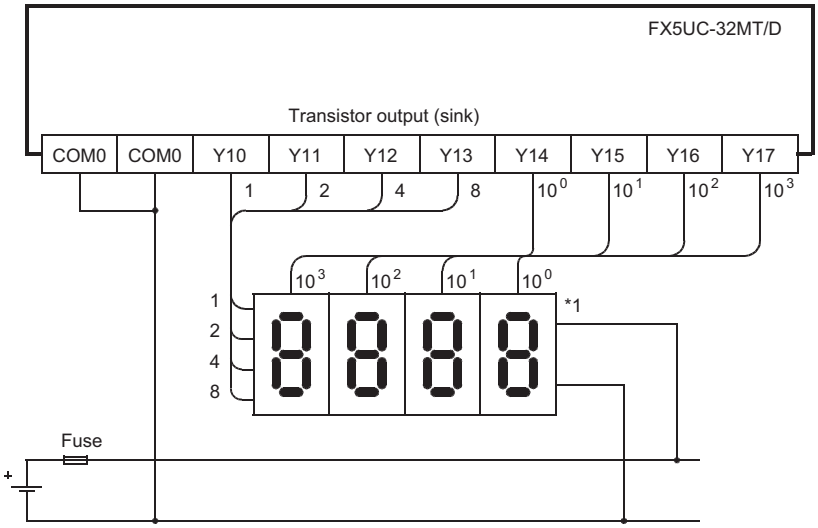

Seven segment with latch used for sink wiring (for transistor output)

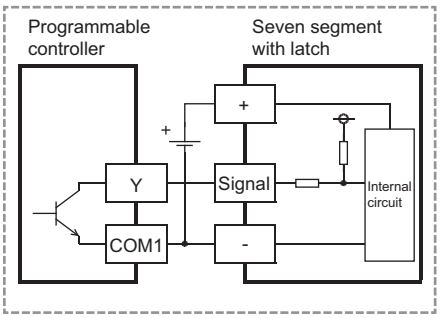

*1 Use a 7-segment display with a latch and a built-in BCD decoder.

• Source wiring

The example is the wiring for the input/output of the FX5U-32MT/ESS.

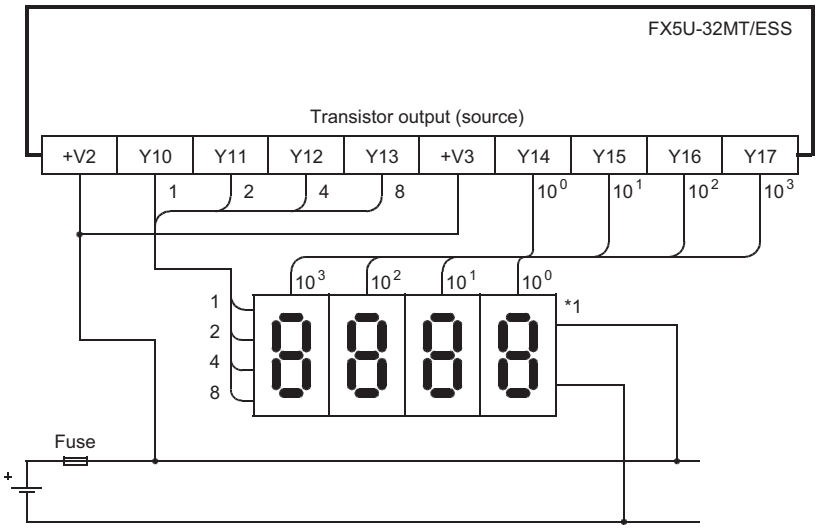

Seven segment with latch used for sink wiring (for transistor output)

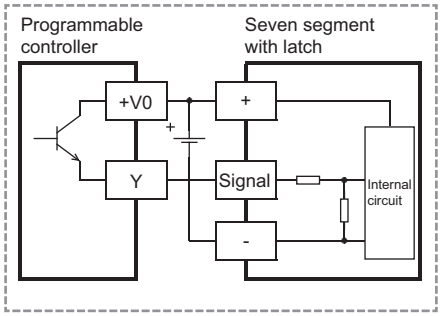

The example is the wiring for the output of the FX5UC-32MT/DSS.

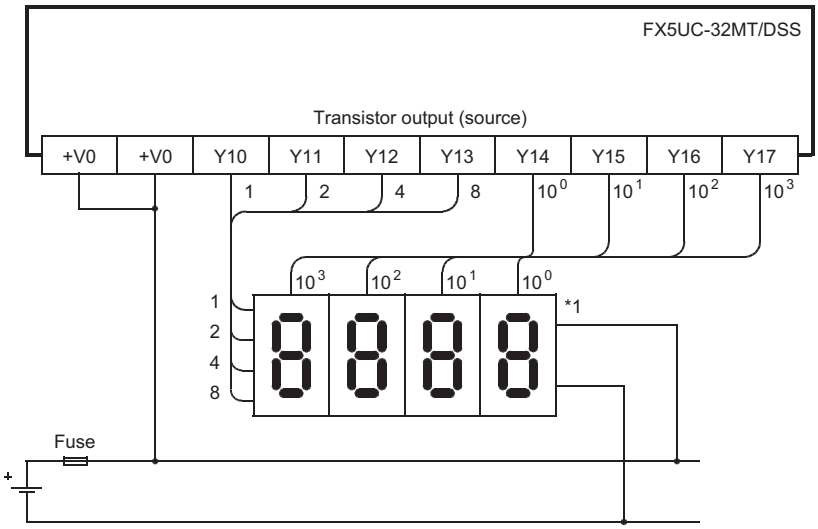

Seven segment with latch used for sink wiring (for transistor output)

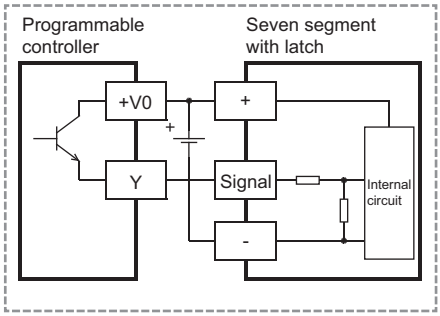

*1 Use a 7-segment display with a latch and a built-in BCD decoder.

When BCD instructions are used

Wiring examples for displaying the current value of D100 on the 2-digit 7-segment display are given below.

For the instructions, refer to MELSEC iQ-F FX5 Programming Manual (Instructions, Standard Functions/Function Blocks).

■Program example



■Wiring example

• Sink wiring

The example is the wiring for the input/output of the FX5U-32MT/ES.

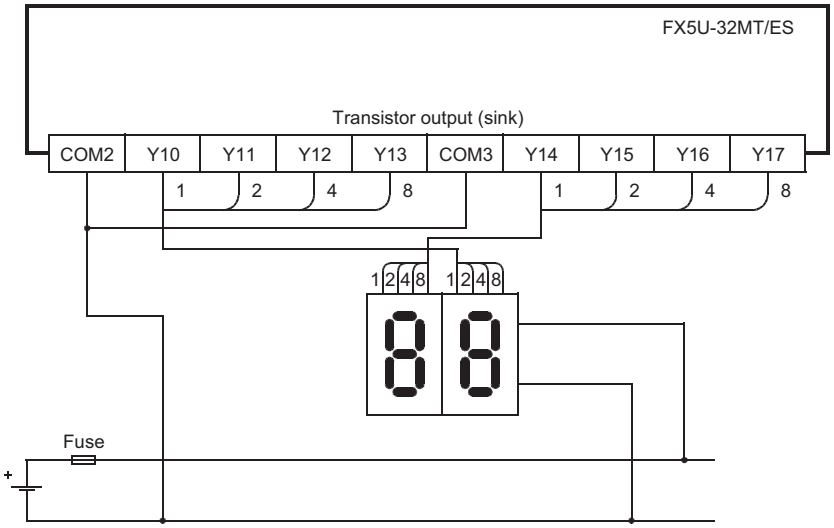

Seven segment with latch used for sink wiring (for transistor output)

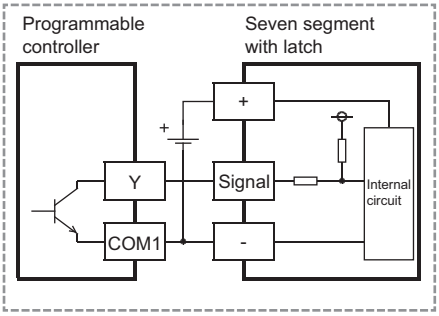

The example is the wiring for the output of the FX5UC-32MT/D.

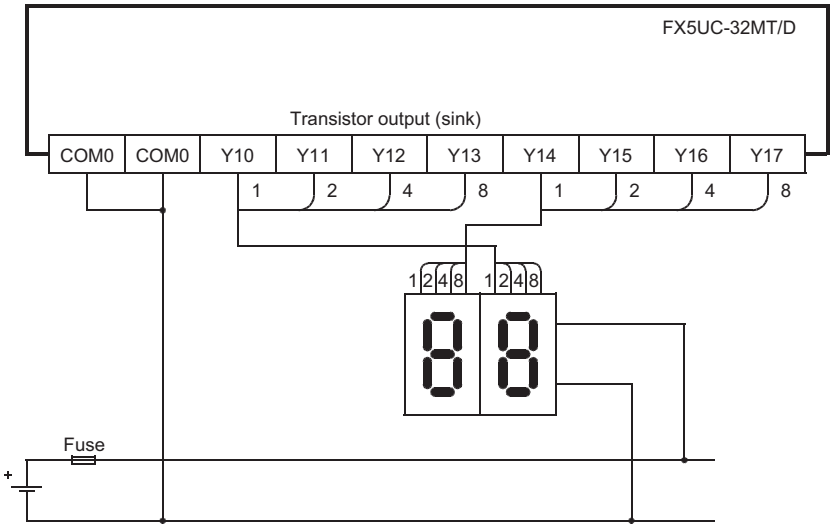

Seven segment with latch used for sink wiring (for transistor output)

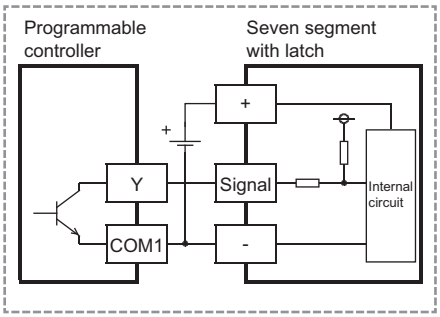

• Source wiring

The example is the wiring for the input/output of the FX5U-32MT/ESS.

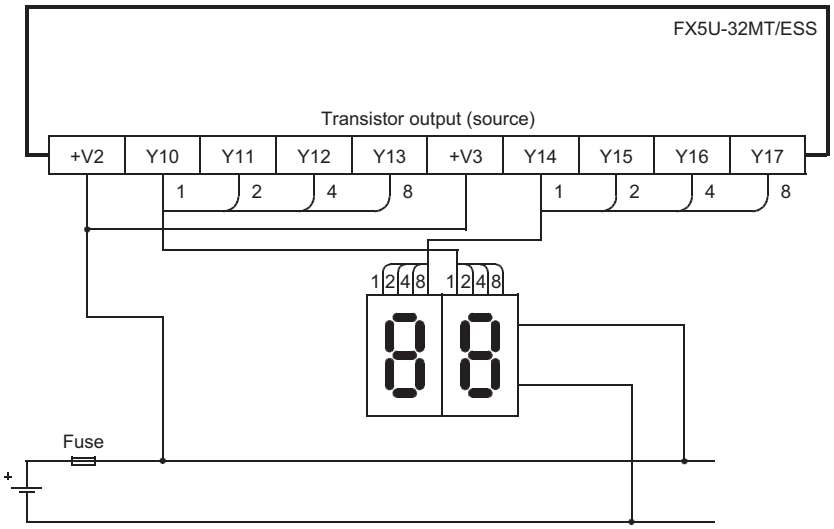

Seven segment with latch used for sink wiring (for transistor output)

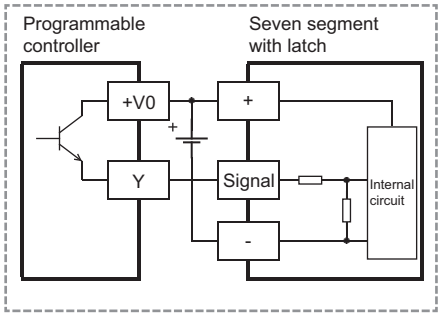

The example is the wiring for the output of the FX5UC-32MT/DSS.

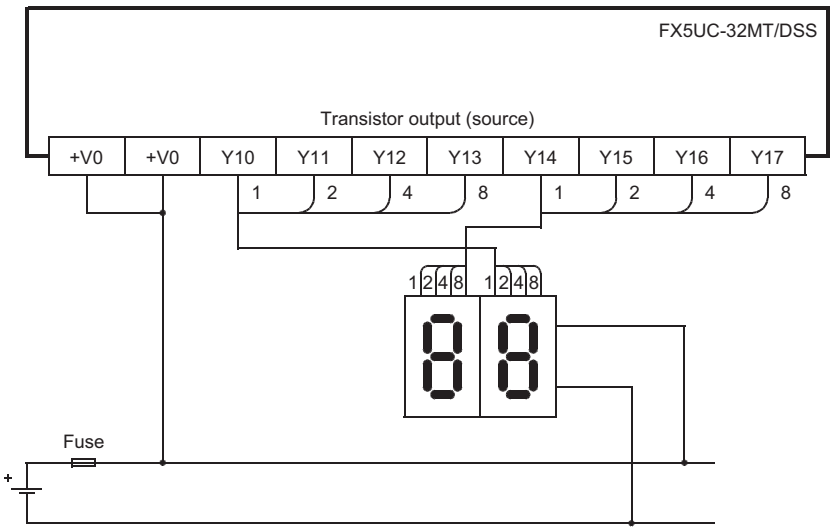

Seven segment with latch used for sink wiring (for transistor output)

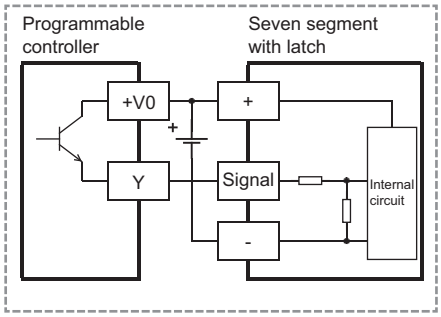

16 PROCEDURES BEFORE OPERATION

16.1 Overview

This chapter describes the procedures before operation.

Procedure	Item	Description	Reference
1	Preliminary inspection	Before supplying power, check that the power supply and ground terminals are connected correctly and input/output devices are wired properly.	☞ Page 251 Preliminary Inspection
2	Installing a battery	Install a battery to the CPU module as needed. (FX5U/FX5UC CPU modules only)	☞ Page 252 Installing a Battery
3	Inserting and removing the SD memory card	Insert or remove the SD memory card to or from the CPU module as needed.	☞ Page 254 Inserting and Removing the SD Memory Card
4	Wiring of each device	Wire each device.	☞ Page 175 WIRING
5	Powering on the system	Check the following items, and then power on the system. • A cable is correctly connected to the power supply. • Power supply voltage is within the specified range. • The CPU module is in the STOP state. When using an external power supply, turn on the power supply at the same time as the CPU module or earlier than the CPU module. When turning off the power, check the safety of the system and turn off the power of the programmable controller (including extension devices) at the same time.	—
6	Connecting a Personal Computer	Connect a personal computer that has an engineering tool installed to the CPU module.	☞ Page 259 Connecting a Personal Computer
7	Initializing the CPU Module	Initialize the CPU module using the engineering tool.	☞ Page 265 Initializing the CPU Module
8	Setting parameters	Set system parameters, CPU parameters, and module parameters. When the following function of the CPU module are used, parameters of the function must be set. • Built-in Ethernet function • Function that uses an SD memory card • When any intelligent function module is mounted	☞ Page 265 Setting Parameters
9	Programming	Create a program using the engineering tool.	☞ Page 267 Programming
10	Writing data to the programmable controller	Write the parameters and the program created by using the engineering tool to the programmable controller.	☞ Page 270 Writing Data to the CPU Module
11	Resetting the CPU Module	Restart the system in either of the following ways. • Power off and on the system. • Resetting the CPU Module	☞ Page 271 Resetting the CPU Module
12	Executing the program	Run the CPU module, and check that the P.RUN LED turns on.	☞ Page 271 Executing the Program
13	Monitoring the Program	Check that the program operates normally using the engineering tool.	☞ Page 272 Monitoring the Program

16.2 Preliminary Inspection

Incorrect connection of the power supply terminal, contact of the DC input wire and power supply wire, or short-circuiting of output wires may result in serious damage.
Before supplying power, check that the power supply and ground terminals are connected correctly and input/output devices are wired properly.

Dielectric withstand voltage test and insulation resistance test

The dielectric withstand voltage and insulation resistance test of the programmable controller should be measured in accordance with the following procedure.

1. Remove all input/output wires and power supply wires from the programmable controller.
2. Connect a crossing wire to each of the programmable controller terminals (power supply terminal, input terminals, and output terminals) except the ground terminal. For the dielectric withstand voltage of each terminal, refer to the general specifications for the product (☞ Page 83 GENERAL SPECIFICATIONS).
3. Measure the dielectric withstand voltage and insulation resistance between each terminal and the ground terminal.

- Dielectric withstand voltage: 1.5kVAC or 500VAC for 1min (The dielectric withstand voltage varies depending on the terminal.)
- Insulation resistance: 10MΩ or higher by 500VDC insulation resistance tester

16.3 Installing a Battery

The battery is not incorporated in the CPU module at shipment from the factory. Install a battery to the CPU module as needed.

Parameter setting is required to back up the device memory and clock data using the battery. (☞ Page 266 Setting an optional battery using the engineering tool)

FX5U CPU module

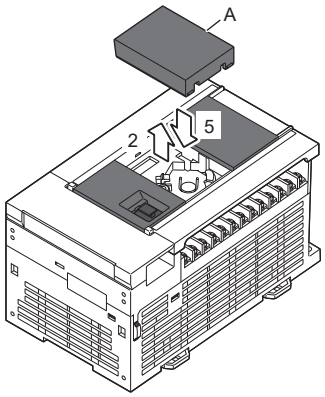

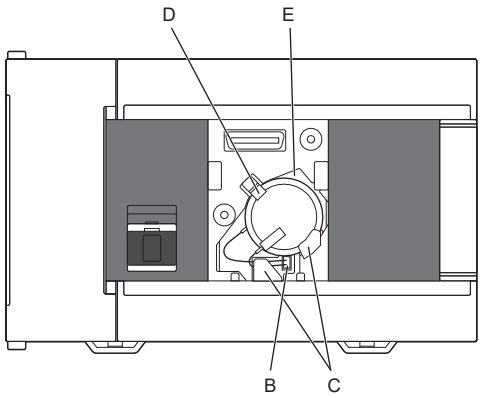

1. Turn the power supply off.
2. Remove the expansion board connector cover (A in the left figure). When an expansion board is installed, remove it.
3. Insert the battery connector (B in the left figure) of the battery.
4. Set the battery inside the lower hook (C in the left figure), push up the upper hook (D in the left figure), and then fit the battery in the battery holder (E in the left figure). The left figure shows the position of the battery.
5. Attach the expansion board connector cover. When an expansion board was removed in step 2, reinstall it.

FX5UC CPU module

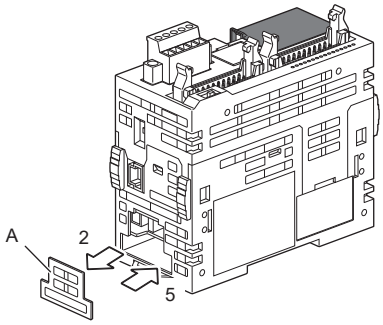

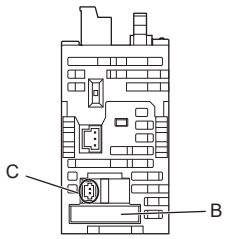

1. Turn the power supply off.
2. Remove the battery cover (A in the left figure).
3. Push the battery into the battery holder (B in the left figure).
4. Insert the battery connector (C in the left figure) of the battery.
5. Attach the battery cover.

16.4 Inserting and Removing the SD Memory Card

The following explains insertion and removal of the SD memory card.

Insertion procedure

Mount the SD memory card. Pay attention to its direction and follow the procedure below.

■FX5S CPU module

To use an SD memory card for the FX5S CPU module, an SD memory card module (FX5-SDCD), which is sold separately, is required.

Power off the FX5S CPU module and connect an FX5-SDCD.

For details on mounting an FX5-SDCD, refer to ☞ Page 170 Connection of an expansion board (SD memory card module).

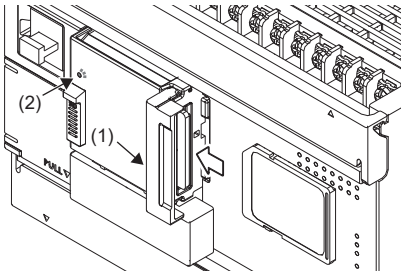

1. Open the SD memory card slot cover (1).
2. Check that the SD memory card stop switch of the FX5-SDCD is on the ON side (down).
3. Ensure that the notched edge of the SD memory card is facing upward, and insert it straight into the SD memory card slot. After mounting, check that the SD memory card is mounted completely. When it is mounted incompletely, malfunctions may occur because of poor contact.
4. Close the SD memory card slot cover (1).
5. Power on the FX5S CPU module when the power is off.
6. The CARD LED (2) blinks until the SD memory card becomes available.
7. The CARD LED (2) turns on when the SD memory card is available.
8. When the CARD LED does not turn on even though the SD memory card is mounted, ensure that SM606 (SD memory card forced disable instruction) and SM607 (SD memory card forced disable status flag) are off by using the engineering tool.

■FX5UJ CPU module

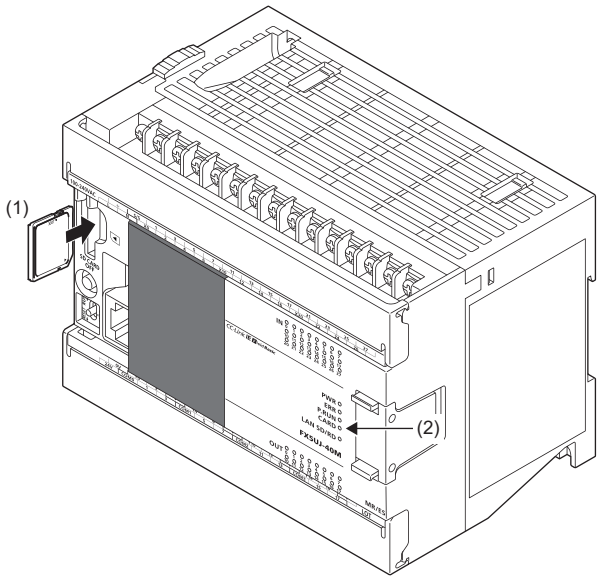

■FX5U CPU module

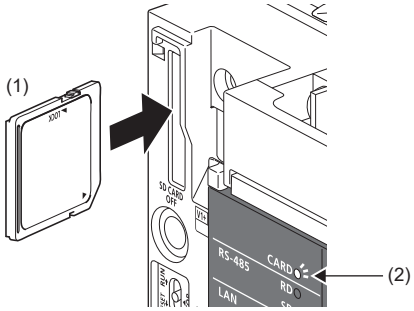

■FX5UC CPU module

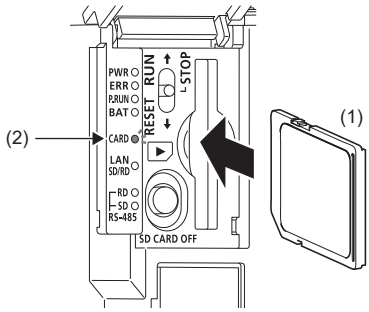

1. Insert the SD memory card (1) straight into the SD memory card slot. Note that the notch of the SD memory card is directed downward. After mounting, check that the SD memory card is mounted completely. When it is mounted incompletely, malfunctions may occur because of poor contact.
2. The CARD LED (2) blinks until the SD memory card becomes available.
3. The CARD LED turns on when the SD memory card is available.
4. When the CARD LED does not turn on even though the SD memory card is mounted, ensure that SM606 (SD memory card forced disable instruction) and SM607 (SD memory card forced disable status flag) are off by using the engineering tool.

Removal procedure

■FX5S CPU module

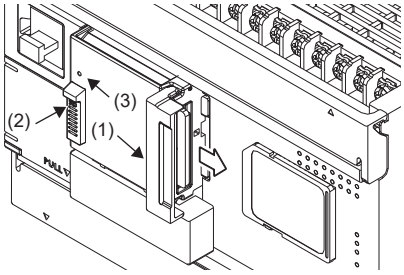

1. Open the SD memory card slot cover (1).
2. Slide the SD memory card disable switch (2) of the FX5-SDCD to the OFF side (upward) to and press it for one second or more to stop access to the card.
3. The CARD LED (3) flashes during the access stop operation, and then the LED turns off when the operation is completed.
4. Push in the SD memory card once, and then pull it out straight. Then, slide the SD memory card disable switch to the ON side (down).
5. Close the SD memory card slot cover (1).

■FX5UJ CPU module

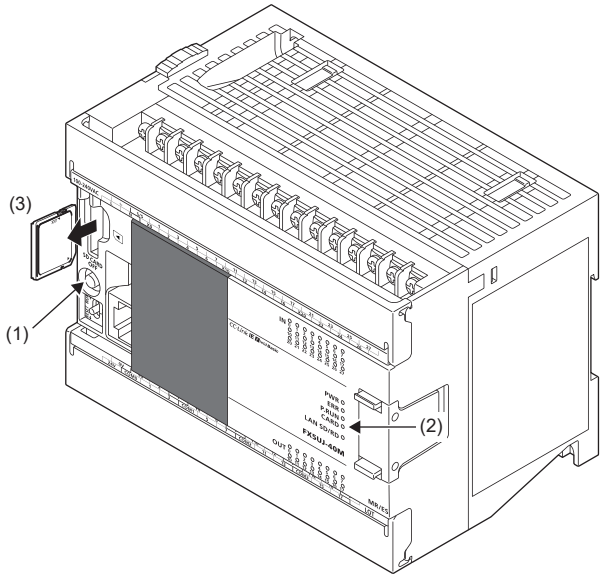

1. Press the SD memory card disable switch (1) for one second or more to stop access to the SD memory card. The CARD LED (2) flashes during the access stop operation, and then the LED turns off when the operation is completed.
2. Push in the SD memory card (3) once, and then pull it out straight.

■FX5U CPU module

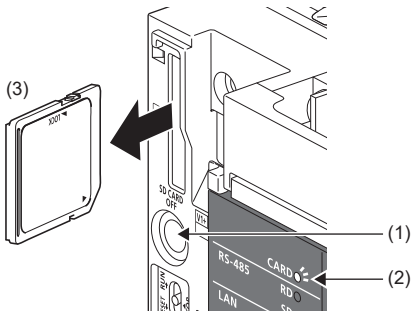

■FX5UC CPU module

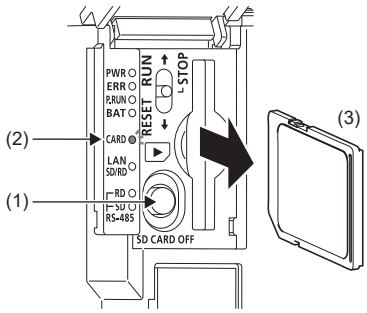

Precautions

- When mounting or removing the SD memory card while the power is on, follow the above-mentioned procedure. Otherwise, the data in the SD memory card may be broken.
- When removing the SD memory card which is being accessed by any function, the CARD LED turns off after the access is completed. When the CARD LED turns off depends on the accessing function.
- When SM605 (mount and remove memory card disabling flag) is on, the CARD LED does not turn off even if the SD memory card disable switch is pressed. When the CARD LED does not turn off, turn on SM606 (instruction of forcibly stop using SD memory card) so that the SD memory card cannot be used.

16.5 Creating a Project

Activate the engineering tool and create a project.

[Project] ⇨ [New]

16

Procedure

Create a program, following the procedure below. This procedure is for programs described in ladder diagram.

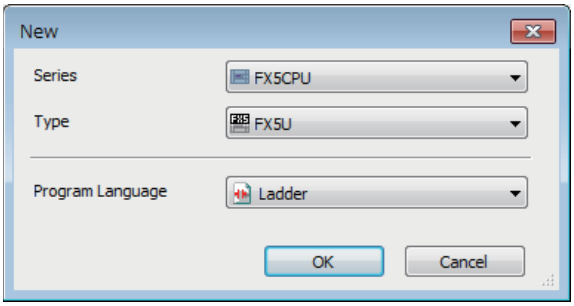

1. Select the model of the CPU module used[*1]. Then, specify a programming language used for the project. Select "Ladder", and click the [OK] button.

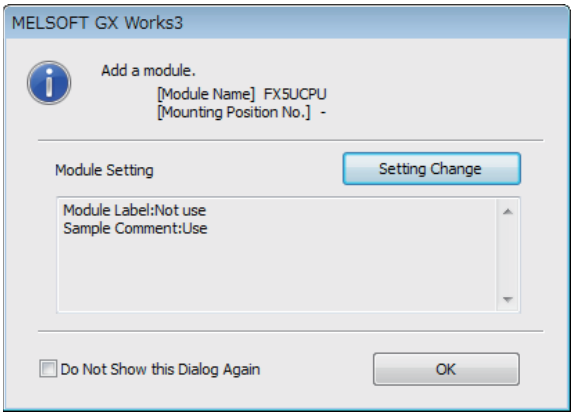

2. Click the [Setting Change] button when the window for adding module labels of the CPU module appears.

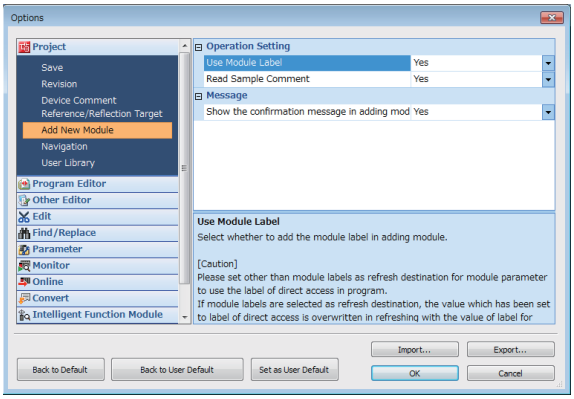

3. On the "Options" window, select [Yes] for [Use Module Label] and click the [OK] button.

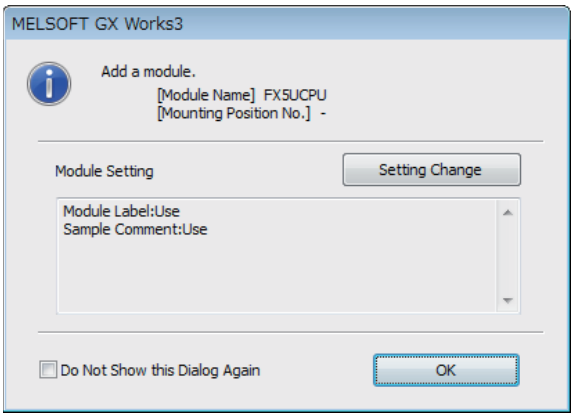

4. Click the [OK] button.

*1 Select "FX5U" when using the FX5UC CPU module.

Point

Module label is a label where the I/O signals and buffer memory areas of a module have already been defined. Use of module labels allows programming without being aware of module internal addresses.

16.6 Connecting a Personal Computer

Connect a personal computer that has an engineering tool installed to the CPU module.

Connecting to a peripheral device connector (Ethernet or USB) of the CPU module

• When connecting a peripheral device

Connect and disconnect the communication cable for the peripheral device.

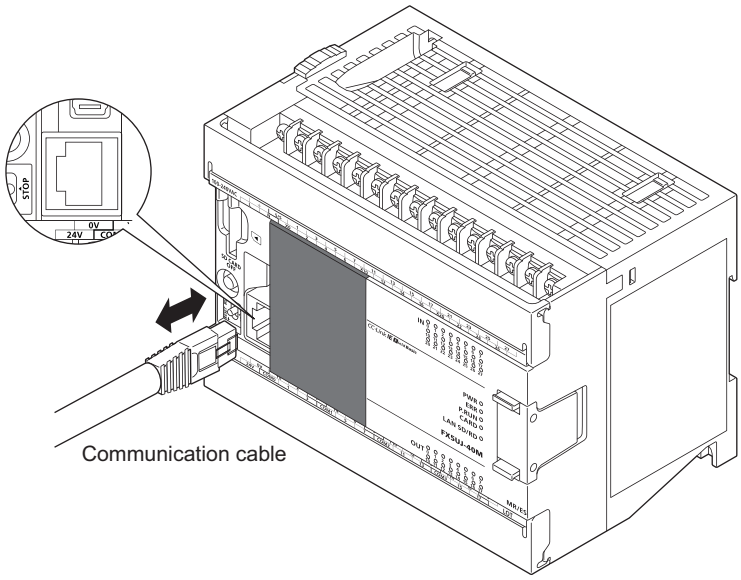

• When the FX5UJ CPU module is connected to a peripheral device (such as personal computer and GOT) at all times

Cut off a part of the peripheral device connector cover as shown in the left-side figure below using a nipper or similar tool, and connect a peripheral device as shown in the right-side figure below.

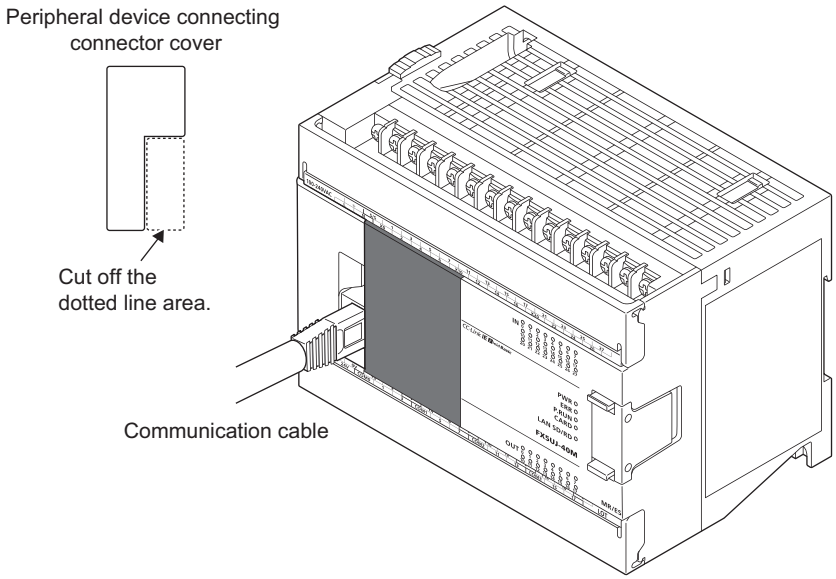

When Ethernet cable is used (direct connection)

Connect a personal computer directly to the CPU module, following the procedure below.



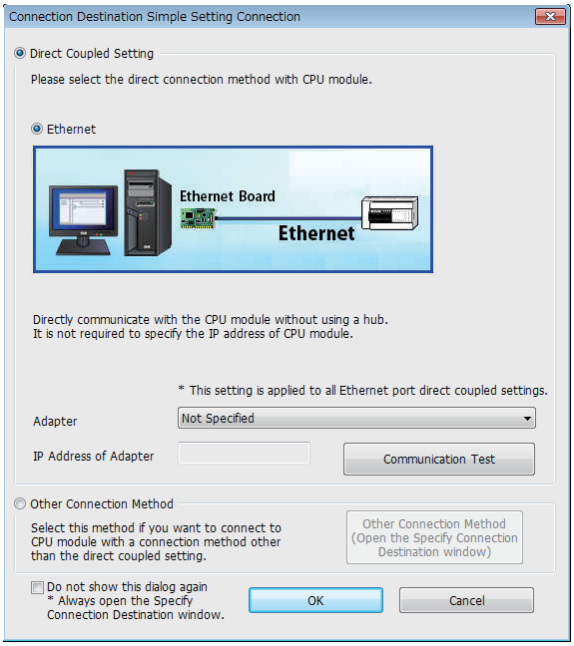

1. Connect a personal computer to the CPU module using the Ethernet cable.
2. Select [Online] ⇨ [Current Connection Destination] on the menu bar of the engineering tool.
3. Select [Ethernet] as the direct connection method with the CPU module on the "Connection Destination Simple Setting Connection" window.

Click the "Communication Test" button to check if the connection can be established with the CPU module.

GX Works3 settings

No.	Item	Selection item	Internal setting	Input value
1)	Personal computer side I/F	Ethernet Board	—	—
2)	programmable controller side I/F	CPU module		Ethernet Port Direct Connection
	Other Station Setting	No Specification	Check at Communication Time	30 seconds
			Retry Times	0 times

Point

For the FX5 CPU module, the Ethernet adapter on the personal computer side used for the Ethernet port direct connection can be specified.
Select an adapter on the "Connection Destination Simple Setting Connection" window.

When Ethernet cable is used (connection via a hub)

To connect to Ethernet via a hub, setting of both the personal computer and the CPU module is required.
Connect a personal computer to the CPU module via a hub, following the procedure below.

Connection of the Ethernet cable

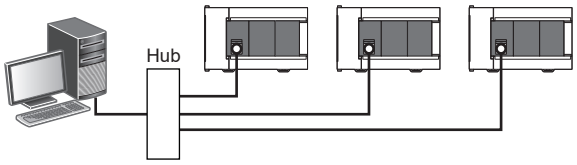

1. Connect a personal computer to the CPU module via a hub.

GX Works3 settings

No.	Item	Selection item	Internal setting		Input value
1)	Personal computer side I/F	Ethernet Board	—		—
2)	programmable controller side I/F	CPU module	Connection via HUB	IP Address	192.168.3.250
				Response Wait Time	2 seconds
	Other Station Setting	No Specification	Check at Communication Time		30 seconds
			Retry Times		0 times

Point

Use the [Find] button in the "programmable controller side I/F Detailed Setting of CPU Module". The IP address of the connected CPU module can be searched and can be set to "IP Address".

Setting the CPU module

■Setting module parameters

From the engineer tool, set on the" Module Parameter Ethernet Port" window.

In [Navigation], select [Parameter] ⇨ Module model name ⇨ [Module Parameter] ⇨ [Ethernet Port] ⇨ [Basic Settings] ⇨ [Own Node Settings].

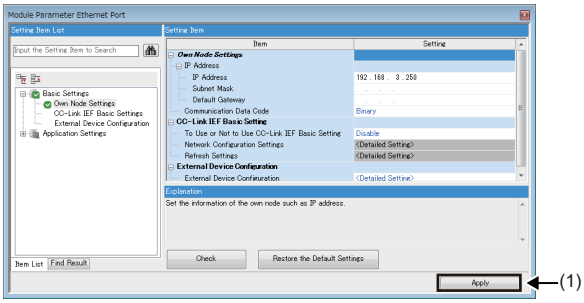

1. Set the IP address on the CPU module side and click the [Apply] button (1).

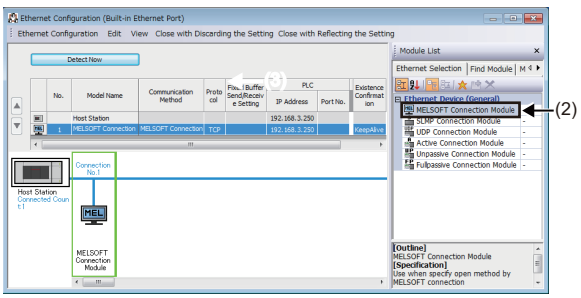

2. Set the connection. From the "Module Parameter Ethernet Port" window, select [Basic Settings] ⇨ [External Device Configuration] ⇨ [Detailed Setting] ⇨ [Ethernet Configuration (Built-in Ethernet Port)].

3. Drag and drop "MELSOFT Connection Module" (2) from the "Module List" to the left side of the window.

■Writing Data to the CPU Module

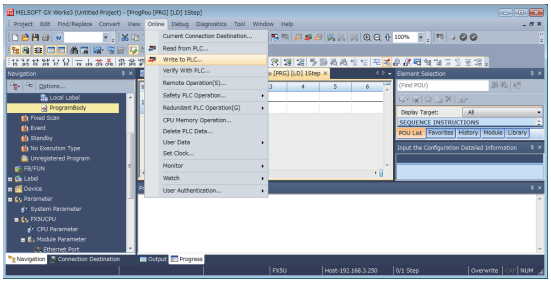

Write the parameters to be set in the CPU module.
From the menu bar of the engineering tool, select [Online] ⇨ [Write to PLC].
After writing the parameters to the CPU module, power off and on or reset the CPU module to enable the parameters.

Engineering tool settings

Set the engineering tool on the "Specify Connection Destination Connection" window.

Select [Online] ⇨ [Current Connection Destination].

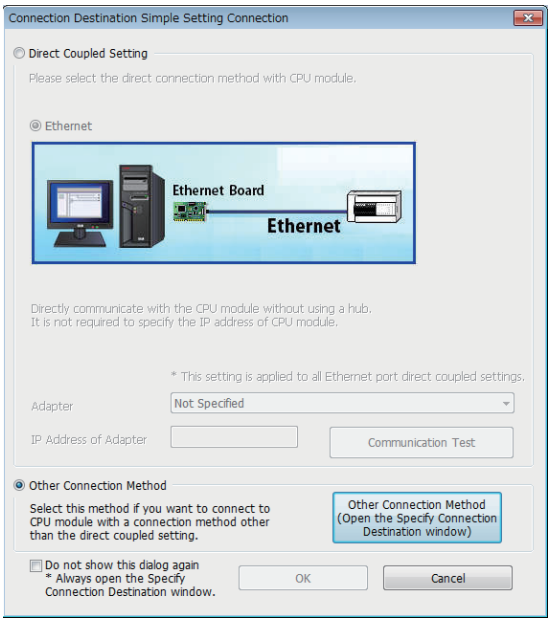

1. On the "Connection Destination Simple Setting Connection" window, select another connection method by clicking the [Other Connection Method (Open the Specify Connection Destination Window)] button.

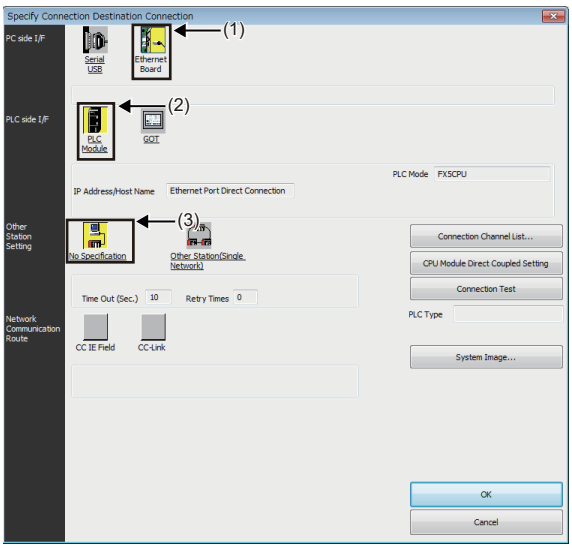

2. Select "Ethernet Board" for "PC side I/F" (1).

3. Select "CPU Module" for "PLC side I/F" (2).

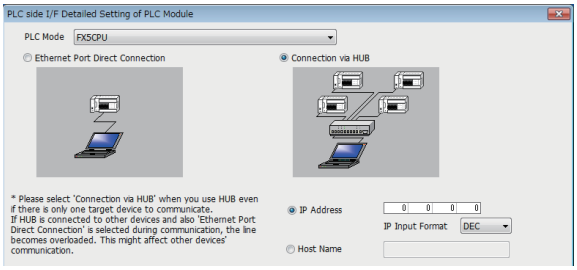

Input the CPU IP address or host name in the "PLC side I/F Detailed Setting of PLC Module" window as shown in the left figure.
When inputting the host name, set the name specified in the Microsoft® Windows® hosts file.

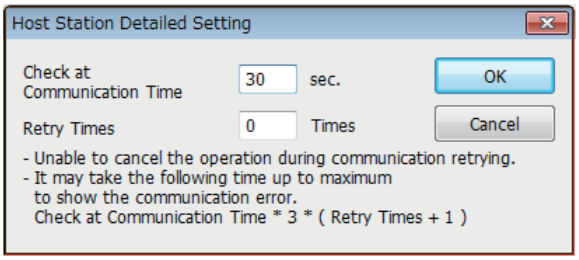

4. Double-click "No Specification" (3) on the "Specify Connection Destination Connection" window to set "Other Station Setting". Select an item appropriate to the operating environment.

When RS-232C cable is used

Connect a personal computer directly to the CPU module, following the procedure below.

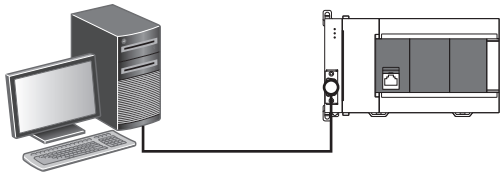

1. Connect a personal computer to the CPU module using the RS-232C cable.*1

2. Select [Online] ⇨ [Current Connection Destination] on the menu bar of the engineering tool.

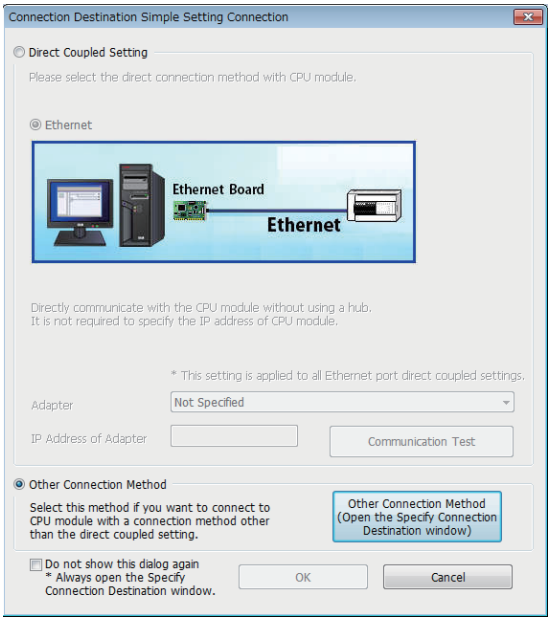

3. On the "Connection Destination Simple Setting Connection" window, select another connection method by clicking the [Other Connection Method (Open the Specify Connection Destination Window)] button.

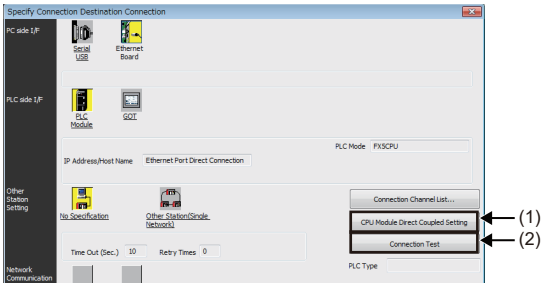

4. Click the [CPU Module Direct Coupled Setting] button (1) on the "Specify Connection Destination Connection" window.

16

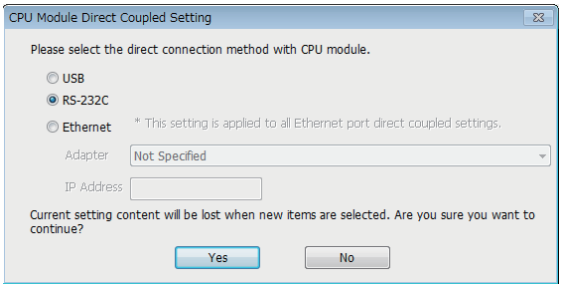

5. Select [RS-232C] for the connection method, and click the [Yes] button.

6. Click the [Connection Test] button (2), and check if the personal computer is connected to the CPU module.

*1 When connecting by RS-232C cable, an expansion board or expansion adapter is required.

GX Works3 settings

No.	Item	Selection item	Internal setting	Input value
1)	Personal computer side I/F	Serial/USB	RS-232C	—
			COM Port	COM1
			Transmission Speed	115.2Kbps
2)	programmable controller side I/F	CPU module	CPU mode	FX5CPU
	Other Station Setting	No Specification	Check at Communication Time	30 seconds
			Retry Times	0 times

When USB cable is used

Connect a personal computer directly to the CPU module, following the procedure below. (FX5UJ CPU module and FX5S CPU module)



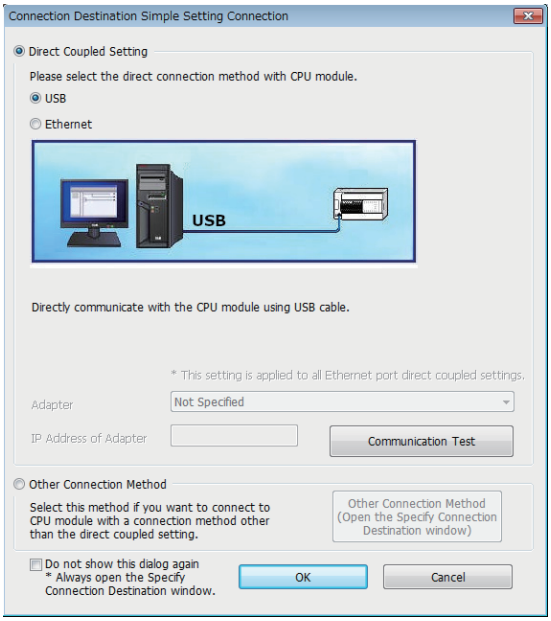

1. Connect a personal computer to the CPU module using the USB cable.

2. Select [Online] ⇨ [Current Connection Destination] on the menu bar of the engineering tool.

3. Select "USB" as the direct connection method with the CPU module on the "Connection Destination Simple Setting Connection" window. Click the "Communication Test" button to check if the connection can be established with the CPU module.

Point

- When a personal computer and CPU module are connected, the driver is automatically installed. When the driver is not installed, install it manually. (GX Works3 Operating Manual)
- When a personal computer and CPU module are connected, a message prompting a user to start GX Works3 is displayed. (A message is not displayed when GX Works3 starts.)

16.7 Initializing the CPU Module

Initialize the CPU module.

[Online] ⇨ [CPU Memory Operation]

Procedure

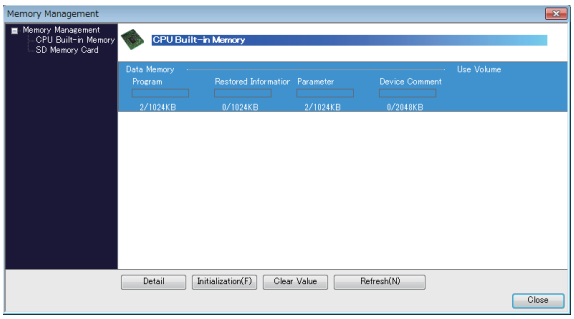

1. Select "Data Memory" on the "Memory Management" window, and click the [Initialization] button.
2. After the initialization processing completes, click the [Close] button.

16.8 Setting Parameters

Set system parameters and parameters for each module.

When setting parameters from [Navigation]

The following shows how to set parameters.

■System parameters

These parameters are set from [Navigation] to specify a model name of a CPU module and the CPU Module operation at error detection.

[Navigation] ⇨ [Parameter] ⇨ [System Parameter]

■CPU parameters

CPU modules require setting of the CPU Parameters.

[Navigation] ⇨ [Parameter] ⇨ Module model name ⇨ [CPU Parameter]

■Module parameters of CPU module

These parameters are required to execute each built-in function of a CPU module.

[Navigation] ⇨ [Parameter] ⇨ Module model name ⇨ [Module Parameter]

■Memory card parameters

These parameters are required to execute functions that access an SD memory card.

[Navigation] ⇨ [Parameter] ⇨ Module model name ⇨ [Memory Card Parameter]

■Module parameters (each expansion adapter or intelligent function module)

Each expansion adapter and intelligent function module require setting of the module parameters.

[Navigation] ⇨ [Parameter] ⇨ [Module Information] ⇨ [Each expansion adapter or intelligent function module] ⇨ [Module Parameter]

When setting parameters from the Module configuration diagram

"CPU parameter" and "module parameter" can be set from the module configuration diagram. The following shows how to set them.

[Navigation] ⇨ [Module Configuration]

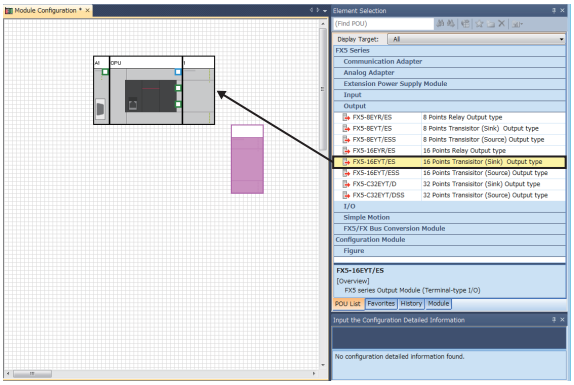

1. Drag each module to be used from the parts select window to the module configuration diagram with the mouse, and place the module to be coupled to the CPU module on the diagram.
2. Select [Edit] ⇨ [Parameter] ⇨ [Fix] on the menu bar.
3. When module labels are prepared in the configured modules, the window for adding module labels appears. Click the [Yes] button.
4. Open the parameter editor of each module by double-clicking the module having parameters that can be set.
5. Set parameters, and click the [Apply] button to close the window.

Setting an optional battery using the engineering tool

The following setting is required when the capacity of the latch device/latch label is increased using the optional battery. Note that the battery does not back up the data when the following setting is not provided.

[Navigation] ⇨ [Parameter] ⇨ Module model name ⇨ [CPU Parameter] ⇨ [Memory/Device Setting] ⇨ [Device/Label Memory Area Setting] ⇨ [Detailed Setting] ⇨ [Device/Label Memory Area Setting] window

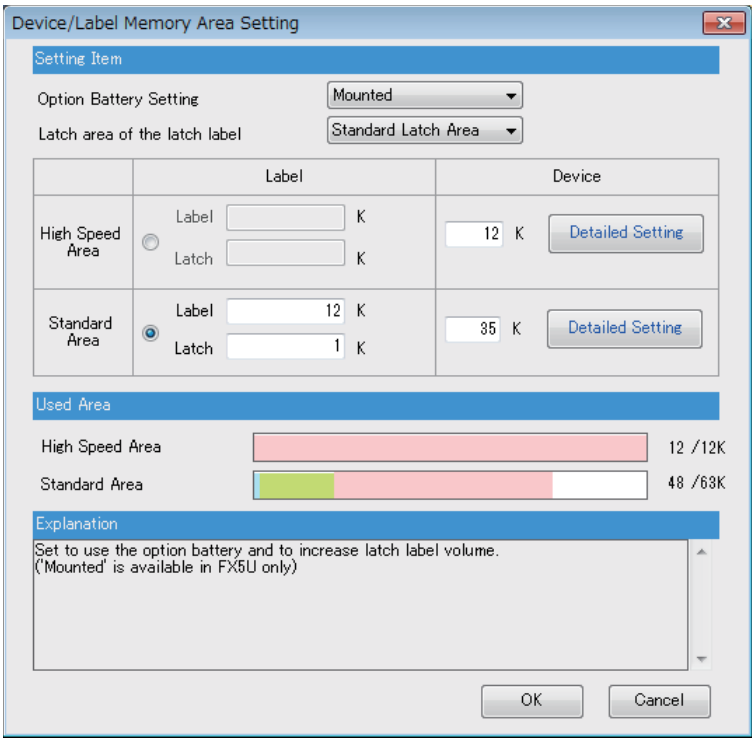

Set the option battery setting to "Mounted" in Device/Label Memory Area Setting window.

16.9 Programming

Create a program. This section describes how to create a program using the following program example.

Program example

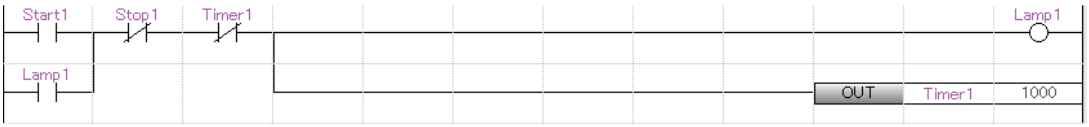

- When Start1 turns on, Timer1 starts counting, and Lamp1 turns on.
- When the current value of Timer1 reaches 1000, Lamp1 turns off.
- When Stop1 turns on, Lamp1 turns off.

Registering labels

Label is a variable whose name and data type can be declared by a user.
Use of labels allows programming without concern to devices and buffer memory addresses. For this reason, programs using labels can be used in other systems where the module configuration is different.
Labels can be registered on the label editor.

[Navigation] ⇨ [Program] ⇨ [Scan] ⇨ [MAIN] ⇨ [ProgPou] ⇨ [Local Label]

Procedure

Register the label "Start1" in the program example, following the procedure below.

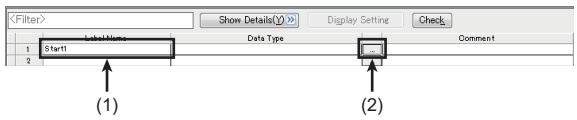

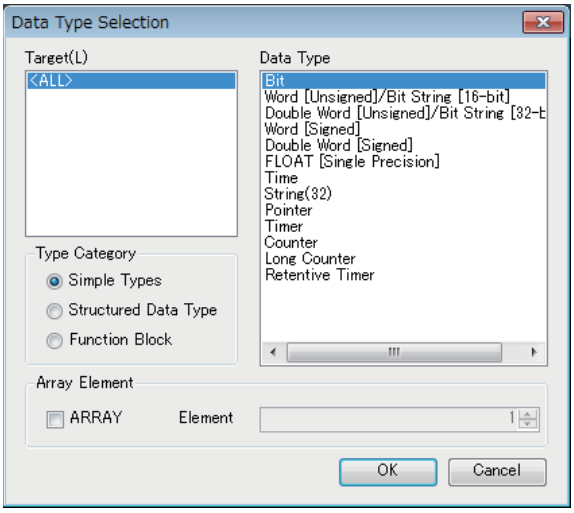

1. Enter the name, "Start1", in the "Label Name" field (1).
2. Click the button (2) on the right of the "Data Type" field to open the "Data Type Selection" window.
3. Specify the data type. Select "Bit", and click the [OK] button.

Register other labels in the program example in the same way.

Point

- The class, and constant of labels can be set as needed by clicking the [Show Details] button on the label editor.
- Labels can also be registered while programming without opening the label editor. (☞ Page 269 Inserting program elements by key input)
- Devices can be assigned to global labels. Open the global label editor, and enter a device in the "Assign (Device/Label)" field.

Inserting program elements

Drag and drop required program elements to the ladder editor.

Display the ladder editor as follows.

[Navigation] ⇨ [Program] ⇨ [Scan] ⇨ [MAIN] ⇨ [ProgPou] ⇨ [Program]

Procedure

Insert a normally open contact of "Start1" in the program example, following the procedure below.

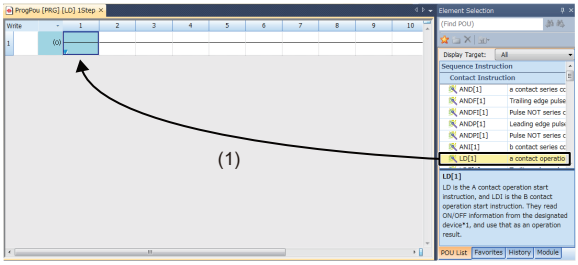

1. Select a program element from the Element Selection window, and drag and drop (1) it to the desired position in the ladder editor. In this example, drag and drop "LD[1]".

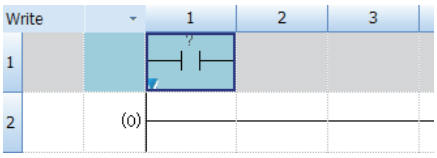

2. Double-click the inserted program element to open the ladder entry window, and click the [Extd Dspl] button.

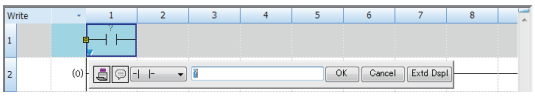

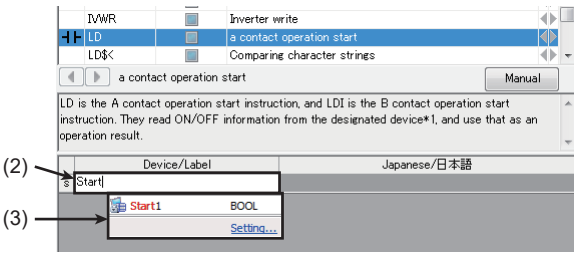

3. Specify the operand. In this example, enter "Start" for "s" in the "Device/Label" field (2).
4. Select an item from the displayed list (3). In this example, select "Start1".

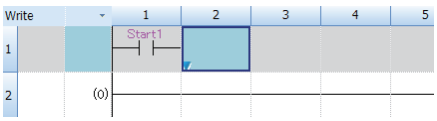

5. The normally open contact of "Start1" is inserted to the program.

Insert other program elements in the program example in the same way.

Point

Common instructions, such as contacts and coils, standard functions/function blocks, and user-defined function blocks/functions can be found in the [POU List] (1) in the "Element Selection" window. Narrow down the list using the drop-down menu (2) for "Display Target" and making a selection.

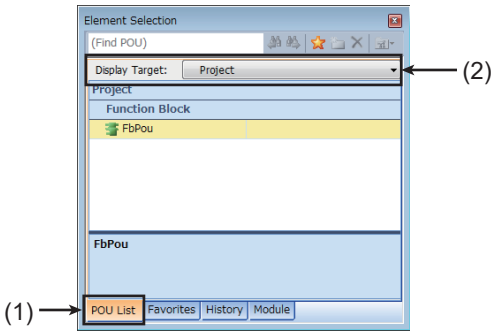

Inserting program elements by key input

Program elements can be inserted by key input.

Procedure

Inserting a normally open contact of "Start1" in the program example, following the procedure below.

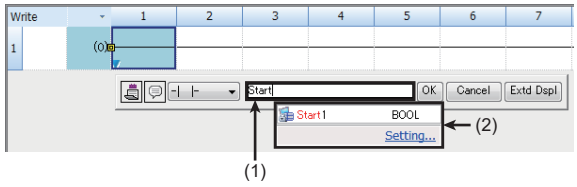

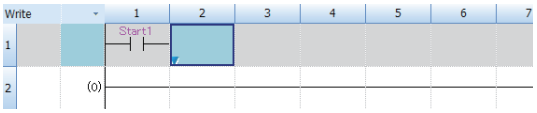

1. Click the insertion position on the ladder editor, and press F5.
2. Enter the name, "Start", in the entry field (1). Select "Start1" from the displayed list (2).
3. The normally open contact of "Start1" is inserted to the program.

Point

A new label can be registered during insertion. Enter the name of a new label on the ladder entry window, and click the [OK] button. Then, specify the registered destination, class, and data type of the label on the "Undefined Label Registration" window, and click the [OK] button.



Special relay for low battery voltage

Prepare a system which allows constant external monitoring of the battery status, using a device such as GOT.

• SM52 (SM8005)

The special relay turns on when the battery voltage is less than the specified value.

The special relay turns off when the battery voltage is normal.

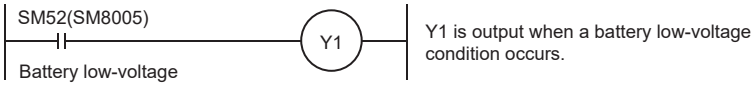

• SM51 (SM8006)

The special relay turns on when the battery voltage is less than the specified value.

The special relay stays on even when the battery voltage is normal.

• SD8005

Battery voltage can be monitored.

16.10 Converting the Program

Compile the input ladder blocks.

Procedure

1. Select [Convert] ⇨ [Convert] on the menu bar.
2. When the conversion processing completes and the input ladder blocks are compiled, the color of those ladder blocks changes from gray to white.

16.11 Saving the Project

Save the created project.

[Project] ⇨ [Save as]

16.12 Writing Data to the CPU Module

Write the set parameters and the created program to the CPU module.

[Online] ⇨ [Write to PLC]

Procedure

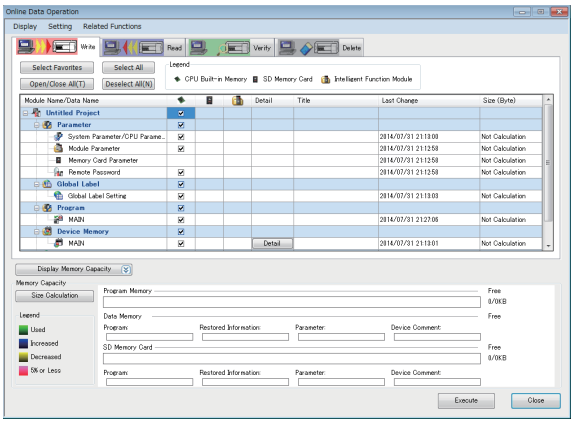

1. Select the system parameter file, CPU parameter file, module parameter file, and program file on the "Online Data Operation" window.
2. Click the [Execute] button.
3. After the write processing completes, click the [Close] button.

Point

- For the operation of the CPU module, the system parameter file, CPU parameter file, and program file must be written. For the operation of the expansion adapter, I/O modules and intelligent function modules, the module parameter files must be written as well.
- Use of the [Select Favorites] button enables users to easily select frequently-used files, such as the system parameter file, CPU parameter file, and program file. Register items as favorites on the window opened by selecting [Setting] ⇨ [Register Favorites Selection] on the menu bar.

16.13 Resetting the CPU Module

Reset the CPU module using the RUN/STOP/RESET switch located on the front of the CPU module.

Procedure

The following illustration is an example of the FX5U CPU module.

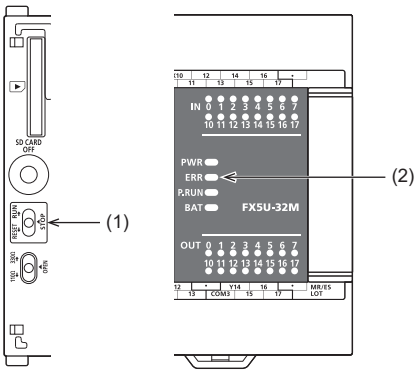

1. Set the RUN/STOP/RESET switch (1) to the RESET position for a second or longer.
2. Check that the ERROR LED (2) flashes.
3. Set the switch back to the STOP position.

Point

Operate the RUN/STOP/RESET switch with your fingers. Use of a tool such as a screwdriver may damage the switch.

16.14 Executing the Program

Execute the program written to the programmable controller by using the RUN/STOP/RESET switch.

Procedure

The following illustration is an example of the FX5U CPU module.

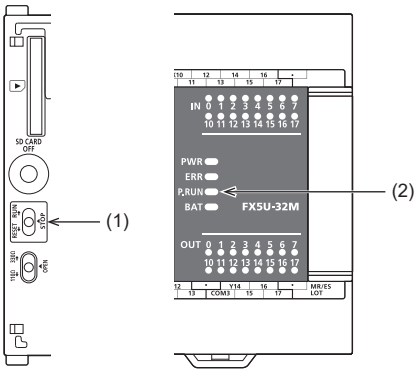

1. Set the RUN/STOP/RESET switch (1) to the RUN position.
2. Check that the P.RUN (2) turns on.

Remote operation

The operation status of the CPU module can be changed externally with the RUN/STOP/RESET switch set to the RUN position. The operation status of the CPU module can be set to the PAUSE status.

Remote operation can be performed by either of the following methods.

- Using contacts (MELSEC iQ-F FX5 User's Manual (Application))
- Using engineering tools (GX Works3 Operating Manual)
- Using external devices using SLMP (MELSEC iQ-F FX5 User's Manual (SLMP))

Use of different types of RUN/STOP

■When the RUN/STOP/RESET switch and RUN contact are used

• The RUN/STOP status of the programmable controller is determined by the conditions shown in the following table.

RUN/STOP/RESET switch status	Condition of the input specified as the RUN terminal by parameters	CPU module status
RUN	RUN	RUN
	STOP	STOP
STOP	RUN	STOP
	STOP	STOP

16.15 Monitoring the Program

Monitor the program operation using the engineering tool.

Monitoring on the monitor status bar

The LED status of the CPU module and the scan time can be monitored on the monitor status bar.

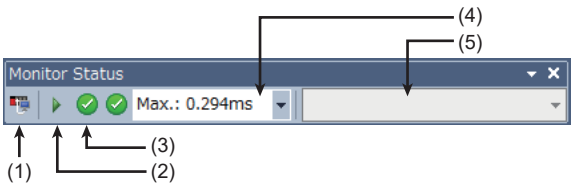

1. Select [Online] ⇨ [Monitor] ⇨ [Start Monitoring] on the menu bar.
2. Monitor the LED status of the CPU module and the scan time.

■Icons

No.	Item	Description	Icon	Meaning
(1)	Connection status	The connection status with the CPU module is displayed.		Connected with the CPU module
				Not connected with the CPU module
(2)	Operating status	The operating status of the CPU module in accordance with the RUN/STOP/RESET switch of the CPU module or the remote operation by the engineering tool is displayed. Click the icon. Then, "Remote operation" window appears. (GX Works3 Operating Manual)		RUN
				STOP
				PAUSE
(3)	ERROR LED status	The ERROR LED status of the CPU module is displayed. Click the icon. Then, "Module diagnostics" window appears. (☞ Page 277 Module diagnostics)		Off
				On
				Flashing
(4)	Scan time details	The current value, maximum value, or minimum value for the scan time can be displayed by selecting it from the drop-down list.		
(5)	Monitor target selection	Specify the monitor target FB instance when monitoring an FB program.		

Monitoring on the ladder editor

The ON/OFF states of contacts and coils and the current values of word devices and labels can be monitored on the ladder editor.

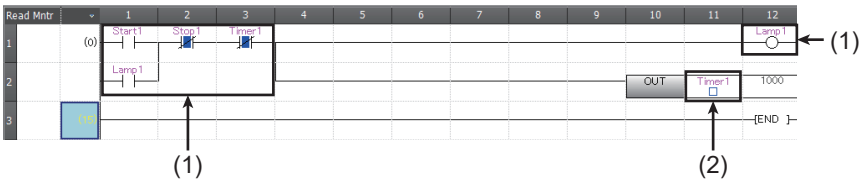

(1) The ON/OFF states of the contacts and coils are displayed.
(2) The current value of the word/double word type data is displayed.

1. Select [Online] ⇨ [Monitor] ⇨ [Start Monitoring] on the menu bar.

2. Monitor the ON/OFF states of contacts and coils and the current values of word devices and labels.

■ON/OFF state display

The ON/OFF states are displayed on the editor as follows:



■Changing the current value

To change the current value, select the cell on the ladder editor, and press Shift + double-click the cell or press Shift + Enter while the program is being monitored.

Point

The program can also be monitored on the Device/Buffer Memory Batch window of the Watch window. (GX Works3 Operating Manual)

17 TROUBLESHOOTING

Details on errors occurring in the system, their causes, and corrective actions are explained below.
For details on troubleshooting for each module, refer to the manuals for the module.

Point

Saving the program and devices at the time of an error helps to analyze the error cause.
(☞ Page 280 Backing Up the Data)

17.1 Troubleshooting Procedure

When the system has any trouble, perform troubleshooting in the following order.

1. Check that each module is properly mounted and wired.
2. Check the LEDs of the CPU module. (☞ Page 274 Checking with LEDs)
3. Check the LEDs of each intelligent function module and FX5 safety extension module. (📖 User's manuals for each module)
4. Connect the engineering tool and execute the system monitor. The error module can be identified. (☞ Page 276 System monitor)
5. Select the error module, and execute the module diagnostics. The error cause and the action to be taken can be displayed. (☞ Page 277 Module diagnostics)
6. When the cause could not be specified by Module diagnostics, check the error history from the event history of the engineering tool to identify the cause. (☞ Page 278 Event history)
7. Check the cause of the error and take corrective actions.

17.2 Checking with LEDs

Check the module status with LEDs as a means to perform the primary diagnosis.

Checking the PWR LED

When the PWR LED turns off, check the following items.

Item to check	Cause and action
Measure the voltage supply to the CPU module.	When the power source is not supplying the proper voltage, provide a power source that does.
Remove extension modules and all wiring other than the one for the power supply, and turn on the power supply.	When the PWR LED turns on in this condition, the 24VDC service power supply may be shorted or overloaded. Reconnect the modules and wire one by one to identify the cause.

When the PWR LED still does not turn on even after the items shown above are checked, there may be a hardware issue.
Consult your local Mitsubishi Electric representative.

Checking the BAT LED

When the BAT LED is flashing, check the following items.
The LED is valid when the optional battery is installed and the LED is set to "display" for battery errors by using the parameter.

Item to check	Cause and action
Check the installation of the battery.	Install the battery properly.
Check the battery voltage.	When the battery voltage is reduced, replace the battery with a new one. Battery voltage can be monitored with programmable controller data register SD8005. (☞ Page 269 Special relay for low battery voltage)

Checking the ERR LED

When the ERR LED flashing

When the ERR LED is flashing, check the following items.

Item to check	Cause and action
Write system parameters, CPU parameters, and program files, and turn on the power supply again.	Programs or parameters are not written or damaged. Since a CPU module with the factory default setting has no programs, the ERR LED flashes.
Set the CPU module to the STOP status and turn on the power supply again.	When the ERR LED turns off, a watchdog timer error has probably occurred. Take any of the following measures. • Review the program and avoid the maximum value (SD524, SD525) of the scan time exceeding the scan time monitoring time setting value set by the parameter. • Check that the input used for input interruption or pulse catch is not being abnormally turned on and off in one scan. • Check that the frequency of the pulse input to the high-speed counter is within the specified range. • Add some WDT instructions to the program and reset the watchdog timer several times in one scan.

When the ERR LED turns on

When the ERR LED turns on, check the following items.

Item to check	Cause and action
Provide a different power supply to the CPU module.	When the ERR LED turns off, noise may have affected the module. Consider taking the following measures. • Check the ground wiring, and reexamine the wiring route and installation location. • Fit a noise filter onto the power supply line.

When the ERR LED still does not turn off even after the items shown above are checked, there may be a hardware issue. Consult your local Mitsubishi Electric representative.

Checking the P.RUN LED

When the P.RUN LED turns off, check the status of the ERR LED and take corrective actions. (☞ Page 275 Checking the ERR LED)

When the P.RUN LED turns on, check the following items.

Cause	CPU module status	Action
After writing to programmable controller, the CPU module was set to RUN without resetting.	Stopped	Reset the CPU module or turn off and on the power supply, and then set the CPU module to RUN.
The operating status of the CPU module was changed to RUN or PAUSE at the time of online program change.	Operating status before the change	Wait until P.RUN LED stops flashing. (When the online program change is completed, P.RUN LED automatically stops flashing. After that, the operation status is switched.)

17.3 Troubleshooting Using the Engineering Tool

Check the error or history using the engineering tool, and identify the error cause. More detailed information on the error as well as the error cause and action to be taken can be checked by using the engineering tool.
The engineering tool has the following functions for troubleshooting.

Function	Action
System monitor	Displays the module configuration, and detailed information and error status of each module. (☞ Page 276 System monitor)
Module diagnostics	This function diagnoses the module. (The current error and its details can be checked.) (☞ Page 277 Module diagnostics)
Event history	This function displays event information including errors that occurred in the CPU module, expansion board, expansion adapter, and intelligent function module and errors on the network. (☞ Page 278 Event history)

For details on each function, refer to the following.
📖GX Works3 Operating Manual

System monitor

This function displays the module configuration, and detailed information and error status of each module.
For the error module identified, the module diagnostics can be executed from this window.

[Diagnostics] ⇨ [System Monitor]

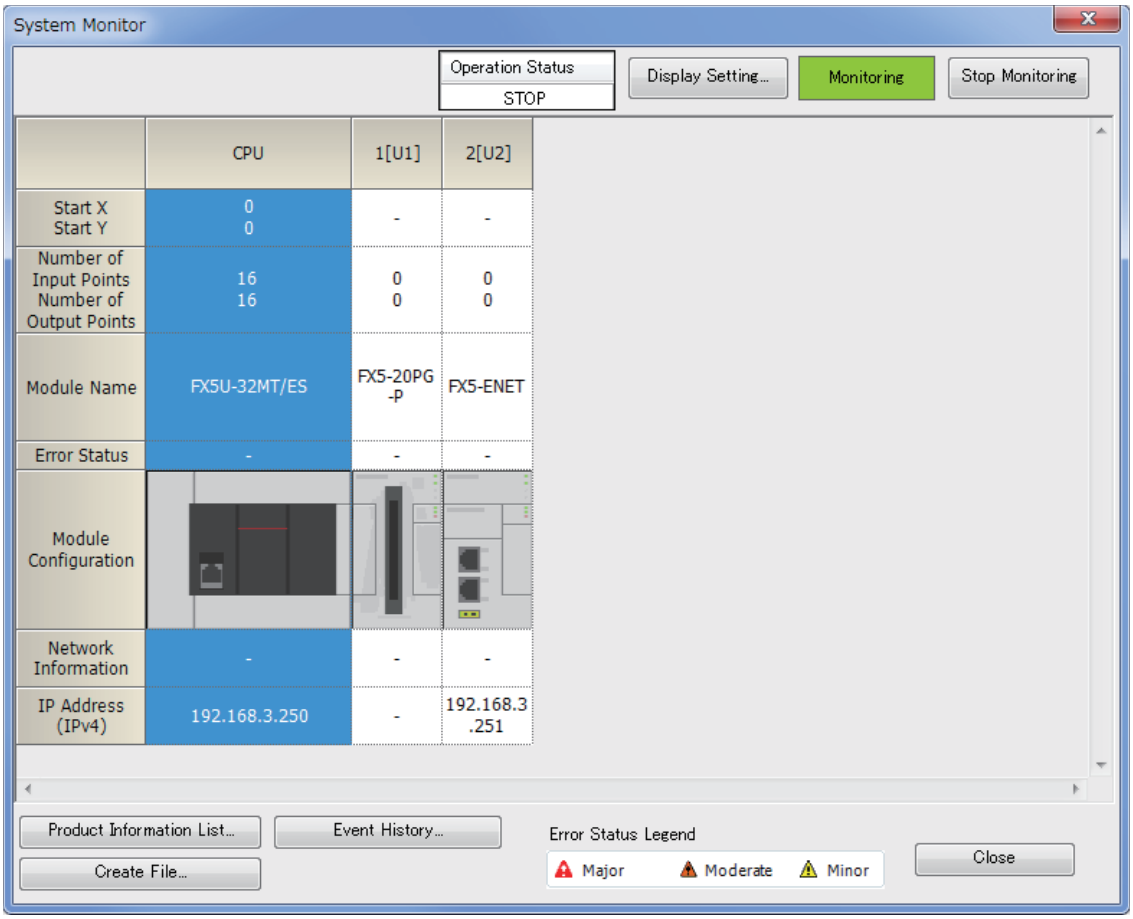

Module diagnostics

This function diagnoses the CPU module, expansion board, expansion adapter, intelligent function module, and FX5 safety extension module*1. (The current error and its details can be checked.)
Information required for troubleshooting, such as the current error, details and cause of the error, and action to be taken, are displayed. The incorrect parameter setting and program error location can also be identified by selecting the error and clicking the [Error Jump] button. On the [Module Information List] tab, the LED status and the switch status of the target module can be checked.

*1 The information of the FX5-SF-8DI4 is integrated and displayed in the module diagnostics window of the FX5-SF-MU4T5. When checking the status of the FX5-SF-8DI4, check the module diagnostic window of the FX5-SF-MU4T5.

[Diagnostics] ⇨ [System Monitor] ⇨ Double-click the error module

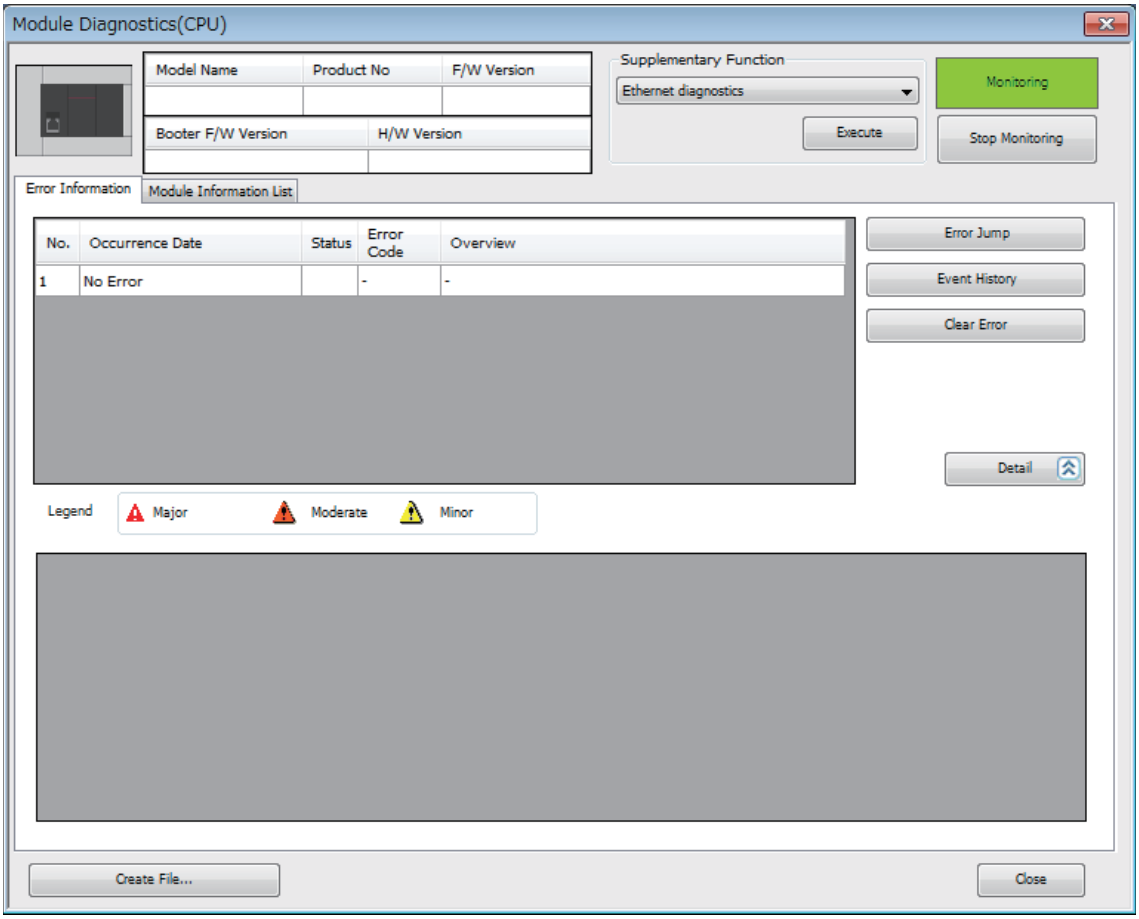

Event history

This function displays event information including errors that occurred in the CPU module, expansion board, expansion adapter, and intelligent function module and errors on the network.
Since information collected before the CPU module is powered off or reset can also be displayed, the error cause can be identified based on the errors.
The displayed information can also be saved in CSV file format.

[Diagnostics] ⇨ [System Monitor] ⇨ [Event History] button

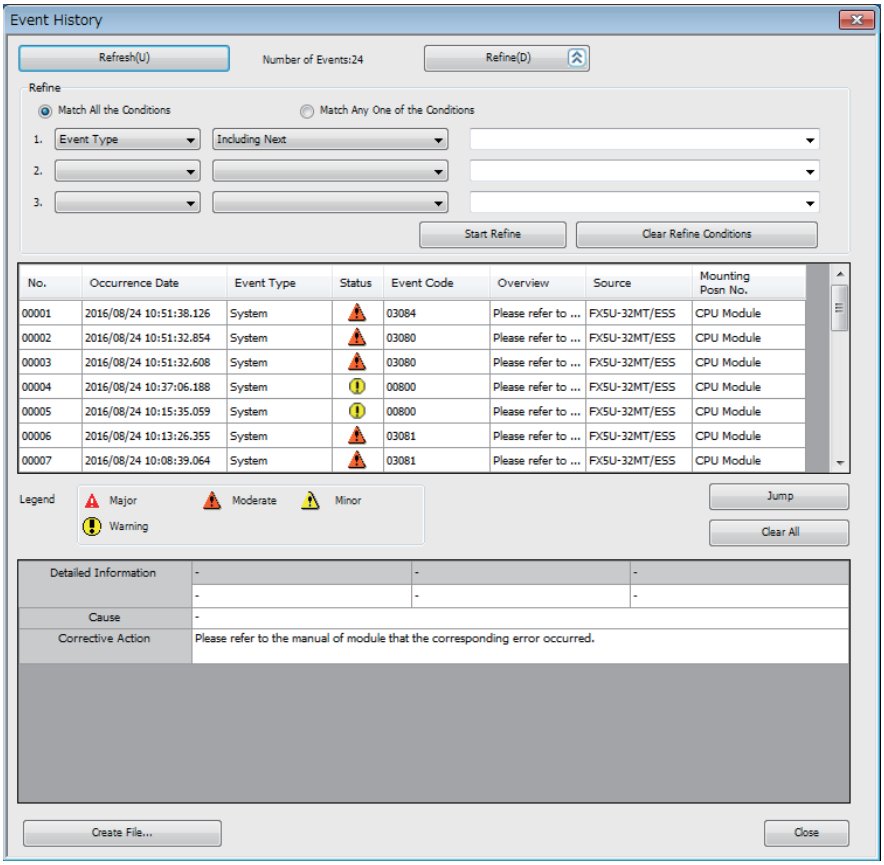

Point

Use the event history function to identify the cause of failure that occurred in facilities or devices.

For details on this function and collected information, refer to the following.
MELSEC iQ-F FX5 User's Manual (Application)

17.4 Error Status and Operations on Occurrence of an Error

When an error occurs, the CPU module performs preconfigured actions depending on the status of the error.

Error status

Errors are classified into the following three types according to the urgency of the errors.

Error status	Program execution status	Description	Required action
Major error	Stop	The module is unable to continue its operation due to a hardware issue.	Perform troubleshooting. If the error still persists, consult your local Mitsubishi Electric representative.
Moderate error	Stop	The module is unable to execute programs or continue the data communications with stations on the network due to improper program or parameter settings and temporary noise.	To resume the execution of the program or the data communications with the stations on the network, use the engineering tool to identify the cause of the error and take corrective actions.
Minor error	Continue	The module has detected a minor error or alarm. However, the execution of the program and the data communications with the stations on the network continues.	Check the details on the error with the engineering tool. If necessary, take corrective actions for the error.

Operation at the occurrence of an error

Errors are classified into stop errors and continuation errors.

■Stop error

When a stop error occurs, the CPU module stops operation and enters the STOP status.

For details on parameters, refer to 📖MELSEC iQ-F FX5 User's Manual (Application).

■Continuation error

When a continuation error occurs, the CPU module will keep the operation status and perform operations.

Only continuation errors can be cleared. When a continuation error is cleared and the CPU module is restored, the CPU module returns to the status before the occurrence of the error. Continuation errors can be cleared by either of the following methods.

- Using engineering tools
- Using special relay (SM) (☞ Page 280 Clearing Errors)

17.5 Backing Up the Data

Saving the following information immediately after the occurrence of an error helps in analyzing the cause of the error.

- Parameters, programs, and device memory
- Error histories

Backing up parameters, programs, and device memory

The procedure for backing up parameters, programs, and device memory using the engineering tool is explained below.

[Online] ⇨ [Read from PLC]

1. Check the parameters, programs, and device memory to back up.
2. Click the [Execute] button to read the data.

Backing up devices and buffer memory

The procedure for backing up devices and buffer memory using the engineering tool is explained below.

[Online] ⇨ [Read from PLC]

1. Click the "Device Memory" check box.
2. Click [Detail].
3. Input character strings in "Device Data Name" and select the devices to back up.
4. Select the "Buffer Memory Intelligent Module No.", and input the head module number.
5. Click [OK] and then click [Execute] to read the data from the programmable controller.

17.6 Clearing Errors

Only continuation errors can be cleared.

When an error is cleared and the CPU module is restored, the status of SM, SD, or LEDs returns to the status before the occurrence of the error. After an error is cleared and when the same error occurs again, this error is recorded again in the error history.

Continuation errors can be cleared by the following method.

Using special relay (SM)

Turning on and off SM50, all errors will be cleared.

17.7 Troubleshooting for Each Symptom

When the CPU module does not operate properly, check the appropriate item from the following and perform troubleshooting.

I/O operation (CPU module, I/O module)

Output does not turn on

Item to check	Action
Check for errors with external wiring.	Connect the external wiring properly.
Stop the programmable controller, and forcibly turn on or off the inoperable output with a peripheral or the engineering tool.	■When the output operates The output may be turned off unintentionally in the program. Review user program (Duplicate coils or RST instructions). ■When the output does not operate Check the configuration of the connected devices and the connection of the extension cables. When the configuration of the external wiring and connected devices and the connection of the extension cables are acceptable, there may be a hardware issue. Consult your local Mitsubishi Electric representative.

Output does not turn off

Item to check	Action
Check for errors with external wiring.	Connect the external wiring properly.
Stop the programmable controller and check that the output turns off.	■When the output turns off The output may be turned off unintentionally in the program. Review user program (Duplicate coils or RST instructions). ■When the output does not turn off There may be a hardware fault. Consult your local Mitsubishi Electric representative.

Input does not turn on

Item to check	Action
Disconnect the external wiring and connect "the [S/S] terminal and the [0V] terminal" or "the [S/S] terminal and the [24V] terminal". Short-circuit the [0V] terminal or [24V] terminal not connected to the [S/S] terminal and the input terminal, and check the LED or a peripheral to check that the input turns on.	■When the input turns on Check that the input device does not have a built-in diode or parallel resistance. If so, refer to ☞ Page 194 Wiring precautions. ■When the input does not turn on Measure the voltage between the [0V] terminal or [24V] terminal not connected to the [S/S] terminal and the input terminal with a tester to check that the voltage is 24VDC. Check the configuration of the external wiring and connected devices and the connection of the extension cables.
■For FX5UC-□MT/D Disconnect the external wiring and short-circuit the COM terminal and the input terminal. Check with the LED or a peripheral whether the input turns on.	■When the input turns on Check that the input device does not have a built-in diode or parallel resistance. If so, refer to the precautions for connecting input devices. ■When the input does not turn on Disconnect the external wiring and measure the voltage between the COM terminal and the input terminal with a tester to check that the voltage is 24VDC. When the input voltage is below 20.4VDC, check that the power supply voltage of the programmable controller is "24VDC +20%, -15%". Check the configuration of the external wiring and connected devices and the connection of the extension cables.

Item to check	Action
■For the FX5UC-□M□/DS□ Disconnect the external wiring and apply a voltage of 24VDC "between the COM□ terminal and the input terminal" or "between the S/S terminal and the input terminal". Check with the LED or a peripheral whether the input turns on.	■When the input turns on Check that the input device does not have a built-in diode or parallel resistance. If so, refer to the precautions for connecting input devices. ■When the input does not turn on With a tester, check that the voltage "between the COM□ terminal and the input terminal" or "between the S/S terminal and the input terminal" is approximately 24VDC. When the input voltage is below 20.4VDC, check that the voltage of the external power supply is "24VDC +20%, -15%". Check the configuration of the external wiring and connected devices and the connection of the extension cables.

Input does not turn off

Item to check	Action
Check that there is no leakage current from input devices.	When the leakage current is 1.5mA or more, connect a bleeder resistance. (☞ Page 194 Wiring precautions)

Writing/reading data

Data cannot be written to the programmable controller

If data cannot be written to the CPU module from the engineering tool, check the following items.

Item to check	Action
Check if a password is not registered.	When a password has been registered, authenticate the password with the engineering tool.
When an SD memory card is the write destination, check that the write protection is not applied to the card.	Remove the write protection from the SD memory card. ☞ Page 82 SD Memory Card
When an SD memory card is the write destination, check that the card is formatted.	Format the SD memory card.
Check that the size of the write data does not exceed the memory capacity.	• Ensure sufficient empty capacity. • After initializing the memory, write in the set of project data backed up by the customer.

If writing still cannot be performed even after the items shown above are checked, there may be a hardware issue. Consult your local Mitsubishi Electric representative.

Data cannot be read from the programmable controller

If data cannot be read from the CPU module to the engineering tool, check the specification of the target memory to be read.
Check the memory and reset the CPU module again. Then try programmable controller read again.
If reading still cannot be performed, there may be a hardware issue. Consult your local Mitsubishi Electric representative.

The program is unintentionally overwritten

The boot operation may be being performed. Read the parameters and review the boot file settings with the engineering tool.
If the boot operation is not being performed, there may be a hardware issue. Consult your local Mitsubishi Electric representative.
For details on the boot operation, refer to 📖MELSEC iQ-F FX5 User's Manual (Application).

Boot operation

Boot operation cannot be performed from the SD memory card

Item to check	Action
Check for errors in the CPU module.	Remove the cause of the error.
Check that the file is set in the boot file settings of the parameters.	Set the file in the parameters.
Check that the file is set in the program file settings of the parameters.	
Check that the file to run is stored in the SD memory card.	Store the file to run.

If the boot operation cannot be performed even after the items shown above are checked, there may be a hardware issue. Consult your local Mitsubishi Electric representative.

18 MAINTENANCE AND INSPECTION

18.1 Daily Inspection

Perform the following inspections on a daily basis.

Item	Inspection item		Description
1	Installation status of the module	Looseness of mounting screws	Retighten the mounting screws.
		Mounting status of the module	The module should be securely mounted.
		Looseness of cover	The cover should not be off.
2	Connection status	Looseness of terminal screws	Retighten the terminal screws.
		Proximity of crimp terminals	Check the proximity between crimp terminals and correct the clearance.
		Looseness of connectors	Connect cable connectors securely.
3	LED status		Check that the LED status is normal. ☞ Page 274 Checking with LEDs User's manuals for each module

18.2 Periodic Inspection

Perform the following inspections once or twice every 6 months to a year.

Also perform the inspections when facilities have been relocated or modified or when wiring has been changed.

Item	Inspection item		Description
1	Ambient environment	Operating ambient temperature	The temperature in the control panel should be -20 to 55℃.*1 (FX5U CPU module/ FX5UC CPU module) The temperature in the control panel should be 0 to 55℃. (FX5UJ CPU module/ FX5S CPU module)
		Operating ambient humidity	The humidity in the control panel should be 5 to 95%RH.
		Working atmosphere	Free from corrosive or flammable gas and excessive conductive dust.
2	Power supply voltage		Voltage within the specified range should be supplied.
3	Installation status	Looseness, rattling	Retighten mounting screws.
		Dirt, foreign objects	Wipe away any dirt or foreign objects. Clean the module.
4	Connection status	Looseness of terminal screws	Retighten the terminal screws.
		Proximity of crimp terminals	Check the proximity between crimp terminals and correct the clearance.
		Looseness of connectors	Connect cable connectors securely.
5	Battery	BAT LED	The BAT LED should be turned off. When flashing, replace the battery with a new one.
		Period following the battery purchase	Replace the battery with a new one if 5 years or more have passed since the battery was purchased.
		OFF status of SM51 (SM8005), SM52 (SM8006)	SM51 (SM8005) and SM52 (SM8006) should be off. When SM51 (SM8005) and SM52 (SM8006) are on, replace the battery with a new one.
6	Module diagnostics		The normal status of the system should be checked with the Module Diagnostics. ☞ Page 277 Module diagnostics
7	Relay contacts		Check the product life of relay outputs. ☞ Page 207 Product life of relay output contacts

*1 The operating ambient temperature is 0 to 55℃ for products manufactured before June 2016.

Point

The product life of relay output contacts varies considerably depending on the load type used. Note that loads generating reverse electromotive force or rush current may cause poor contact or welding of contacts which may lead to considerable reduction of the contact product life.

☞ Page 207 Product life of relay output contacts

Battery replacement

When the battery voltage is reduced, replace it following the procedure below.

Point

Note the following before replacement work.

- Turn on the power supply of the programmable controller for more than 10 seconds.
- Back up the data of the CPU module with the engineering tool.

Even with the battery removed, the built-in capacitor holds the data of the memory for the power interruption time (20 sec). Battery replacement steps 5 and 6 must be completed within the power interruption time (20 sec). When the time taken for battery replacement is longer than the power interruption time, the data of the memory may be lost.

1. Turn the power supply on.
2. Back up the data of the CPU module with the engineering tool.
3. Turn the power supply off.
4. Remove the cover.

- FX5U CPU module

Remove the expansion board connector cover (A in the right figure). When an expansion board is installed, remove it.

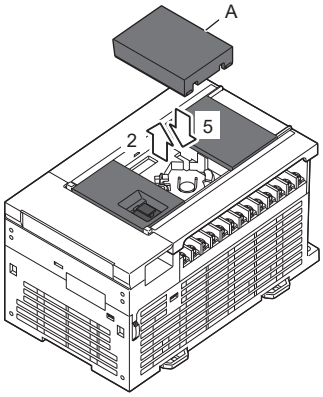

- FX5UC CPU module

Remove the battery cover (A in the right figure).

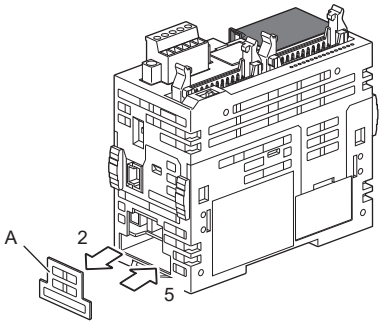

5. Remove the old battery.

• FX5U CPU module

Extract the old battery from the battery holder (B in the right figure), and disconnect the battery connector (C in the right figure).

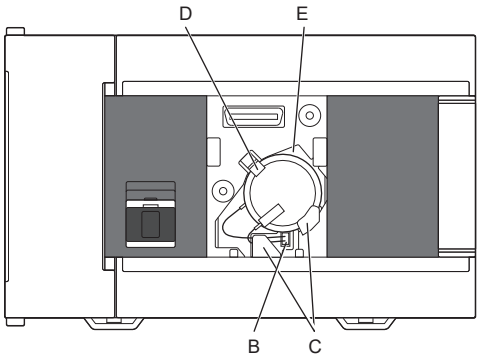

• FX5UC CPU module

Disconnect the battery connector (B in the right figure) of the old battery, and remove the battery from the battery holder (C in the right figure). When extracting the old battery, hold the root part of the cable and pull the old battery straight out.

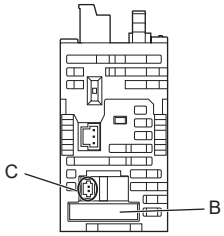

6. Install the new battery. (☞ Page 252 Installing a Battery)

7. Attach the expansion board connector cover.

• FX5U CPU module

When an expansion board was removed in step 4, reinstall it.

Point

- After replacing the battery, check whether the devices set by the latch and clock data are backed up correctly, check safety, and then run the programmable controller.
- When the devices set by the latch are not backed up correctly, clear them, and set their initial values and clock data again if necessary.
- When a long time has passed since the battery voltage is reduced, the data may not be retained by the battery. Make sure to back up the data of the CPU module with the engineering tool before battery replacement.

APPENDIX

Appendix 1 How to Check the Date of Manufacture

Check the date of manufacture of the product (except the expansion board) as follows.

- Nameplate
- Module front surface (CPU module only)

Checking the nameplate

The date of manufacture of the product can be checked from the manufacturer's serial number "S/N" indicated on the nameplate of the product.

Ex.
FX5U CPU module

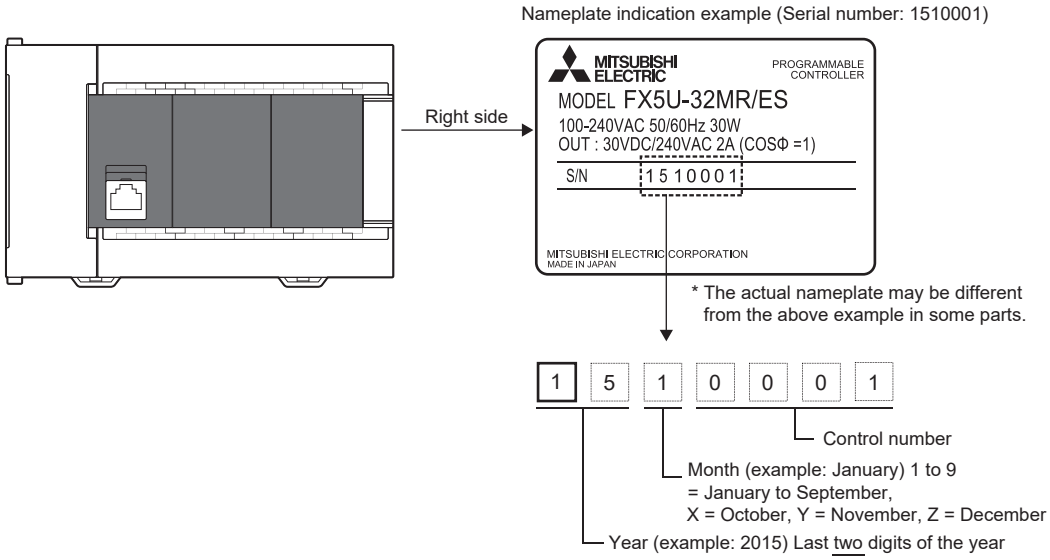

A

Check on the module front surface

The year and month of production of the product can be checked from the number on the front (at the bottom) of the CPU module.

The number is either seven digits of the product number or three digits of the LOT number.

CPU module	Written number
FX5S CPU module	Three digits of the LOT number
FX5UJ CPU module	Three digits of the LOT number
FX5U CPU module	Three digits of the LOT number
FX5UC CPU module	For the products with the product number 2524001 or later: Seven digits of the product number For the products with the product number 2524000 or earlier: Three digits of the LOT number

Ex.

Three digits of the LOT number

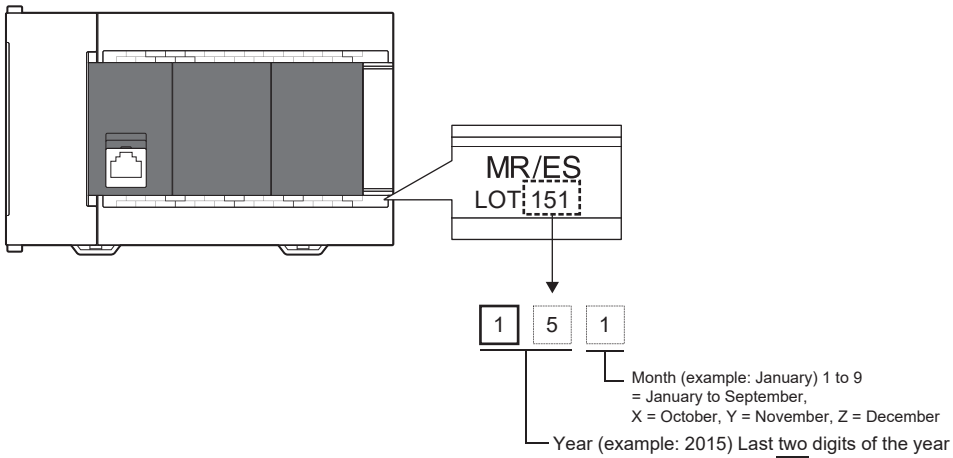

Seven digits of the product number

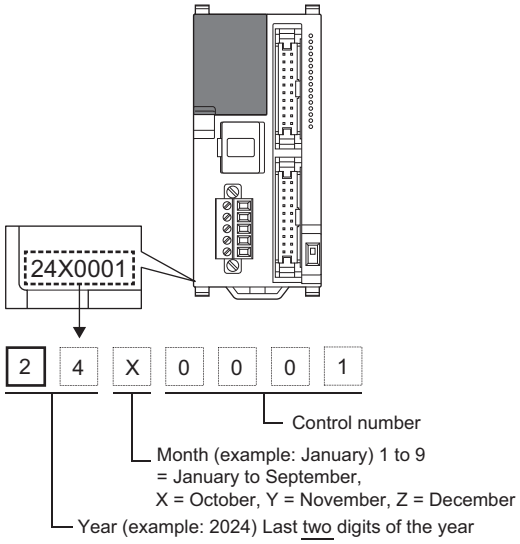

Appendix 2 Standards

Compliance with EU Directive (CE marking)

This product complies with EU Directive, however, this document does not guarantee that a mechanical system including this product will comply with EU Directive.
Compliance to EMC Directive and LVD Directive of the entire mechanical module should be checked by the user/manufacturer. For more details, please consult your local Mitsubishi representative.

Requirement for compliance with EMC Directive

The following products have shown compliance through direct testing (of the identified standards below) and design analysis (through the creation of a technical construction file) to the European Directive for Electromagnetic Compatibility (2014/30/EU) when used as directed by the appropriate documentation.

■Product compatibility

Type: Programmable controller (open-type device)
Models: FX5 manufactured

from October 1st, 2014	FX5U-32MR/ES, FX5U-32MT/ES, FX5U-32MT/ESS, FX5U-64MR/ES, FX5U-64MT/ES, FX5U-64MT/ESS, FX5U-80MR/ES, FX5U-80MT/ES, FX5U-80MT/ESS, FX5-8EX/ES, FX5-8EYR/ES, FX5-8EYT/ES, FX5-8EYT/ESS, FX5-16EX/ES, FX5-16EYR/ES, FX5-16EYT/ES, FX5-16EYT/ESS, FX5-32ER/ES, FX5-32ET/ES, FX5-32ET/ESS, FX5-232ADP, FX5-485ADP, FX5-232-BD, FX5-485-BD, FX5-422-BD-GOT, FX5-1PSU-5V, FX5-CNV-BUS
from January 1st, 2015	FX5UC-32MT/D, FX5UC-32MT/DSS, FX5-C32EX/D, FX5-C32EYT/D, FX5-C32ET/D, FX5-C32EX/DS, FX5-C32EYT/DSS, FX5-C32ET/DSS, FX5-4AD-ADP, FX5-4DA-ADP, FX5-CNV-BUSC, FX5-CNV-IFC
from October 1st, 2015	FX5UC-64MT/D, FX5UC-64MT/DSS, FX5UC-96MT/D, FX5UC-96MT/DSS, FX5-C16EX/D, FX5-C16EX/DS, FX5-C16EYT/D, FX5-C16EYT/DSS, FX5-C1PS-5V
from May 1st, 2016	FX5U-32MR/DS, FX5U-32MT/DS, FX5U-32MT/DSS, FX5-32ER/DS, FX5-32ET/DS, FX5-32ET/DSS, FX5-16ET/ES-H, FX5-16ET/ESS-H, FX5-CNV-IF, FX5-30EC, FX5-65EC, FX5-CNV-BC
from October 1st, 2016	FX5U-64MR/DS, FX5U-64MT/DS, FX5U-64MT/DSS, FX5U-80MR/DS, FX5U-80MT/DS, FX5U-80MT/DSS, FX5-16ER/ES, FX5-16ET/ES, FX5-16ET/ESS, FX5-4AD-PT-ADP, FX5-4AD-TC-ADP
from August 1st, 2017	FX5UC-32MT/DS-TS, FX5UC-32MT/DSS-TS, FX5-C32EX/DS-TS, FX5-C32EYT/D-TS, FX5-C32EYT/DSS-TS, FX5-C32ET/DS-TS, FX5-C32ET/DSS-TS
from January 1st, 2019	FX5UC-32MR/DS-TS, FX5-C16EYR/D-TS
from October 1st, 2019	FX5UJ-24MR/ES, FX5UJ-24MT/ES, FX5UJ-24MT/ESS, FX5UJ-40MR/ES, FX5UJ-40MT/ES, FX5UJ-40MT/ESS, FX5UJ-60MR/ES, FX5UJ-60MT/ES, FX5UJ-60MT/ESS
from April 1st, 2021	FX5-4A-ADP
from October 1st, 2021	FX5S-30MR/ES, FX5S-30MT/ES, FX5S-30MT/ESS, FX5S-40MR/ES, FX5S-40MT/ES, FX5S-40MT/ESS, FX5S-60MR/ES, FX5S-60MT/ES, FX5S-60MT/ESS, FX5S-80MR/ES*1, FX5S-80MT/ES*1, FX5S-80MT/ESS*1
from July 1st, 2023	FX5UJ-24MR/DS, FX5UJ-24MT/DS, FX5UJ-24MT/DSS, FX5UJ-40MR/DS, FX5UJ-40MT/DS, FX5UJ-40MT/DSS, FX5UJ-60MR/DS, FX5UJ-60MT/DS, FX5UJ-60MT/DSS
from July 1st, 2024	FX5S-30MR/DS, FX5S-30MT/DS, FX5S-30MT/DSS, FX5S-40MR/DS, FX5S-40MT/DS, FX5S-40MT/DSS, FX5S-60MR/DS, FX5S-60MT/DS, FX5S-60MT/DSS, FX5S-80MR/DS*1, FX5S-80MT/DS*1, FX5S-80MT/DSS*1

*1 Area-specific model

Electromagnetic compatibility (EMC) directive	Remarks
EN61131-2:2007 Programmable controllers • Equipment requirements and tests	Compliance with all relevant aspects of the standard. EMI • Radiated emission • Conducted emission EMS • Radiated electromagnetic field • Fast transient burst • Electrostatic discharge • High-energy surge • Voltage drops and interruptions • Conducted RF • Power frequency magnetic field

A

Requirements for Low Voltage Directive (LVD) compliance

The following products have shown compliance through direct testing (of the identified standards below) and design analysis (through the creation of a technical construction file) to the European Low Voltage Directive (2014/35/EU) when used as directed by the appropriate documentation.

■Product compatibility

Type: Programmable controller (open-type device)

from October 1st, 2014	FX5U-32MR/ES, FX5U-32MT/ES, FX5U-32MT/ESS, FX5U-64MR/ES, FX5U-64MT/ES, FX5U-64MT/ESS, FX5U-80MR/ES, FX5U-80MT/ES, FX5U-80MT/ESS, FX5-8EYR/ES, FX5-16EYR/ES, FX5-32ER/ES, FX5-32ET/ES, FX5-32ET/ESS, FX5-1PSU-5V
from May 1st, 2016	FX5U-32MR/DS, FX5-32ER/DS
from October 1st, 2016	FX5U-64MR/DS, FX5U-80MR/DS, FX5-16ER/ES

For the products above, programmable controllers manufactured before March 31st, 2018 are compliant with EN61131-2:2007.

Programmable controllers manufactured after April 1st, 2018 are compliant with EN61131-2: 2007 and IEC 61010-2-201.*1

*1 For some models, programmable controllers manufactured in March, 2018 are compliant with LVD directive successively.

The following products are compliant with EN IEC61010-2-201.

from January 1st, 2019	FX5UC-32MR/DS-TS, FX5-C16EYR/D-TS
from October 1st, 2019	FX5UJ-24MR/ES FX5UJ-24MT/ES FX5UJ-24MT/ESS, FX5UJ-40MR/ES FX5UJ-40MT/ES FX5UJ-40MT/ESS, FX5UJ-60MR/ES FX5UJ-60MT/ES FX5UJ-60MT/ESS
from October 1st, 2021	FX5S-30MR/ES, FX5S-30MT/ES, FX5S-30MT/ESS, FX5S-40MR/ES, FX5S-40MT/ES, FX5S-40MT/ESS, FX5S-60MR/ES, FX5S-60MT/ES, FX5S-60MT/ESS, FX5S-80MR/ES*2, FX5S-80MT/ES*2, FX5S-80MT/ESS*2
from July 1st, 2023	FX5UJ-24MR/DS, FX5UJ-40MR/DS, FX5UJ-60MR/DS
from July 1st, 2024	FX5S-30MR/DS, FX5S-30MT/DS, FX5S-30MT/DSS, FX5S-40MR/DS, FX5S-40MT/DS, FX5S-40MT/DSS, FX5S-60MR/DS, FX5S-60MT/DS, FX5S-60MT/DSS, FX5S-80MR/DS*2, FX5S-80MT/DS*2, FX5S-80MT/DSS*2

*2 Area-specific model

Compliance with LVD directive	Remarks
EN61131-2:2007 Programmable controllers • Equipment requirements and tests	The equipment has been assessed as a component for fitting in a suitable control box which meets the requirements of EN61131-2:2007.
EN IEC 61010-2-201 Safety of electrical equipment for measurement, control, and test	The equipment has been assessed as a component for fitting in a suitable control box which meets the requirements of EN IEC 61010-2-201.

Caution for compliance with EU Directive

- Please use the FX5 CPU modules while installed in conductive shielded control panels under a general industrial environment.
- The programmable controller is an open-type device and must be placed in a conductive control panel or similar type of enclosure. Please secure the control box lid to the control box (for conduction). Installation within a control panel greatly affects the safety of the system and aids in shielding noise from the programmable controller.
- For the control panel, use the product having sufficient strength, fire protectiveness and shielding property to an installation environment.
- 24VDC of the power supply must be supplied from the circuit double/reinforced insulated from the main power supply (MAINS).
- For the AC power supply input cable of modules manufactured in or before November 2020 (serial number 20Y****) shown below, wind a ferrite core around it once near the module.

Item	Description
Ferrite core used in tests by Mitsubishi Electric	E04SR401938 (SEIWA ELECTRIC MFG. CO., LTD.)
Target modules	FX5UJ-40MR/ES FX5UJ-40MT/ES FX5UJ-40MT/ESS FX5UJ-60MR/ES FX5UJ-60MT/ES FX5UJ-60MT/ESS

- When not using a peripheral during operation, close the top cover or peripheral connector cover. In addition, if there is a possibility that the built-in Ethernet communication connector may be touched in operation, be sure to eliminate the static electricity or attach an Ethernet cap*1 to prevent the influence of static electricity.

*1 An Ethernet cap is not provided with the FX5UJ CPU module. Reference product: MJ-JP68K manufactured by JST Mfg. Co., Ltd.

[Caution for compliance with the LVD][*1]

- To an external connection port other than AC power supply terminal and AC input/output terminal, connect the circuit separated from a dangerous voltage by a double/reinforced insulation.
- When using an external power supply with the hazardous voltage[*2] and another external power supply with the voltage lower than 30VDC/AC between the commons where relay output terminals are adjacent to each other, do not treat the external power supply with the voltage lower than 30VDC/AC as a part that can be safely touched.
- Do not wire two or more crimp terminals to one terminal. (If the wiring with two or more wires is needed, take an appropriate action such as adding an external terminal block.)
- For crimp terminals to be used for the wiring applied with 30VAC or higher, use the products with insulating sleeves.
- Cutoff device such as a breaker or a circuit protector should be installed in accordance with the following precautions.
  - Use EN60947-1 or EN60947-3 standards.
  - Place the cutoff device so that it can be operated easily.
  - Specify that the cutoff device is for this equipment.
- For the external power supply, use a power supply that complies with the SELV defined by EN IEC61010-2-201.

*1 For the time of compliance with the Low Voltage Directive, refer to ☞ Page 290 Requirements for Low Voltage Directive (LVD) compliance.

*2 30VAC (effective value)/42.4VAC (peak value)

■Caution for when analog products are used

It is recommended to perform the following when precision of measuring and control is required.

As analog devices are sensitive by nature, their use should be considered carefully.

For users of proprietary cables (dedicated for sensors or actuators), these users should follow those manufacturers' installation requirements.

Mitsubishi Electric recommends that shielded cables be used. If no other EMC protection is provided, users may experience temporary loss of accuracy between +10%/-10% in very heavy industrial areas.

However, Mitsubishi Electric suggests that if adequate EMC precautions are followed with general good EMC practice for the user's complete control system, users should expect normal errors as specified in this manual.

- Sensitive analog cables should not be laid in the same trunking or cable conduit as high voltage cabling. Where possible, users should run analog cables separately.
- Ground the shield of the analog input/output cable in accordance with the manuals of each model. However, do not use common grounding with heavy electrical systems.
- When reading analog values, EMC induced errors can be smoothed out by averaging the readings. This can be achieved either through functions on the analog devices or through a user's program in the FX5U CPU module.

Perform the following when using the analog expansion adapter:

- Installation in Control Panel

Programmable controllers are open-type devices that must be installed and used within conductive shielded control panels. Please use the programmable controller while installed within a conductive shielded control panel. Installation within a control panel greatly affects the safety of the system and aids in shielding noise from the programmable controller.

- Control panel
  - The control panel must be conductive.
  - Ground the control panel with the thickest possible grounding cable.
  - To ensure that there is electric contact between the control panel and its door, connect the cabinet and its doors with thick wires.
  - To suppress the leakage of radio waves, the control panel structure must have minimum openings. Also, wrap the cable holes with a shielding cover or other shielding devices.
  - The gap between the control panel and its door must be as small as possible by attaching EMI gaskets between them.

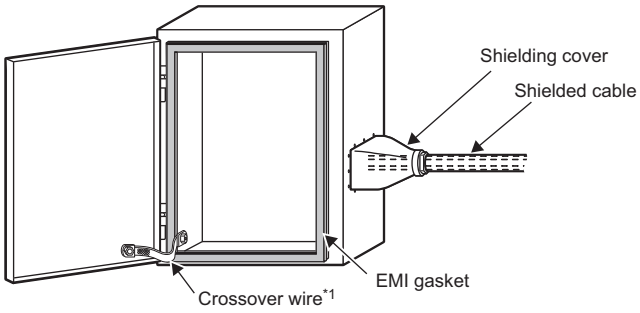

*1 Crossover wire is used to reinforce conductivity between the control panel and the control panel door.

- Cables
  - Make sure to use shielded cables as cables pulled out of the control panel.
  - Connect the shield such as shielded cables and shielding covers to the grounded control panel.
- It is possible that the accuracy temporarily fluctuates within ±10%.

Perform the following when using the FX5-4AD-ADP:

- Set the number of times of winding to "2 turns" within approximately 200mm from terminal block of the analog cable on the FX5-4AD-ADP side, and attach a ferrite core. (Ferrite core used in test by Mitsubishi Electric: E04SR401938 manufactured by SEIWA ELECTRIC MFG. CO., LTD.)

Perform the following when using the FX5-4DA-ADP:

- Set the number of times of winding to "2 turns" within approximately 200mm from the connectors of the power cable on the FX5-4DA-ADP side, and attach a ferrite core. (Ferrite core used in test by Mitsubishi Electric: E04SR401938 manufactured by SEIWA ELECTRIC MFG. CO., LTD.)
- The FX5-4A-ADP requires that the cable used for power supply is 30m or less.

Perform the following when using the FX5-4A-ADP:

- Attach a ferrite core to the CPU module and the power supply of the FX5-4A-ADP. Set the number of times of winding to "2 turns" and attach the ferrite core within approximately 200mm from the terminal block and the connector of the power cable. (Ferrite core used in test by Mitsubishi Electric: E04SR401938 manufactured by SEIWA ELECTRIC MFG. CO., LTD.)
- The FX5-4A-ADP requires that the cable used for power supply is 30m or less.
- For 24VDC power supply of the FX5-4A-ADP, supply power from the AC/DC power supply in the same control panel. (AC/DC power supply used in test by Mitsubishi Electric: PS5R-VE24 manufactured by IDEC Corporation)

■Caution for when the built-in Ethernet port is used

- Use a shielded twisted pair cable for the 10BASE-T or 100BASE-TX cable. Strip a part of the jacket of the shielded twisted pair cable as shown below and ground as much of the exposed shield as possible to both sides of the cable.
- Connect a ferrite core to both ends of the cable. (Ferrite core used in test by Mitsubishi Electric: ZCAT2035-0930A manufactured by TDK Corporation)

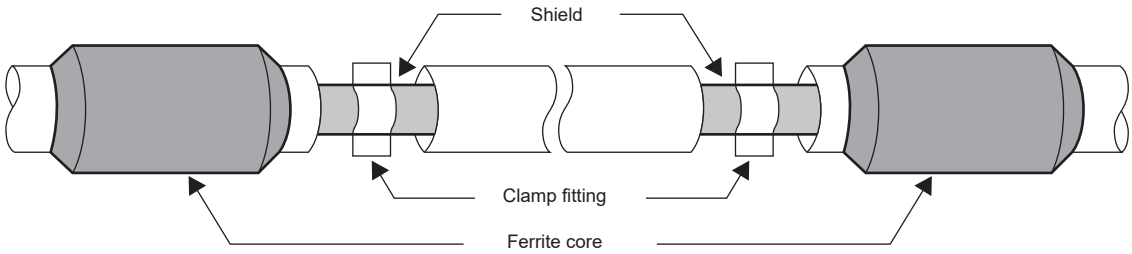

Compliance with UL and cUL standards

Certification of UL and cUL standards

The MELSEC iQ-F series programmable controller supports UL (UL, cUL) standards.

UL, cUL file number: E95239

For models that support UL standards, please consult your local Mitsubishi representative.

Requirements for compliance with UL and cUL standards

These requirements apply to the FX5S/FX5UJ CPU modules.

Requirements for compliance with UL and cUL standards are the same as those described in [Caution for compliance with the LVD] for EU Directive (CE marking).

Compliance with UKCA marking

The requirements for compliance with the UKCA marking are the same as those for the EU directive (CE Marking).

Appendix 3 Precautions for Battery Transportation

When transporting lithium batteries, follow required transportation regulations.
Batteries used in the FX5U/FX5UC CPU modules are classified as follows.

Control-subject product

Built-in

None (the FX5U/FX5UC CPU modules do not include batteries when shipped from the factory.)

Battery only (spare parts and optional parts)

Model	Battery type	Product type	Lithium contained (g/battery)	Weight*1 (g/battery)
FX3U-32BL	Lithium-metal battery	Cell	0.15	30

*1 Weight in packaging.

Precautions for transportation

When transporting the product above, follow IATA Dangerous Goods Regulations, IMDG Code (International Maritime Dangerous Goods Code), and domestic transportation regulations in each country. For details, contact the transportation company to be used.

A

Appendix 4 Handling of Batteries and Devices with Built-in Batteries in EU Member States

This section describes the precautions for disposing of waste batteries in EU member states and exporting batteries and/or devices with built-in batteries to EU member states.

Disposal precautions

In EU member states, there is a separate collection system for waste batteries.
Dispose of batteries properly at the local community waste collection/recycling center.
The symbol shown in the following figure is printed on the batteries and packaging of batteries and devices with built-in batteries.

(1) (2)



The symbol (1) indicates that batteries need to be disposed of separately from other wastes.
If the chemical symbol is printed beneath the symbol (1) shown overleaf, this chemical symbol means that the battery or accumulator contains a heavy metal at a certain concentration. This will be indicated as follows:

- Hg: mercury (0.0005%)
- Cd: cadmium (0.002%)
- Pb: lead (0.004%)

Restriction

This symbol is specified as below:
(1): EU Battery Directive (2006/66/EC) (to be repealed on 18 August 2025)
(1)(2): EU Battery Regulation (EU 2023/1542)

Exportation precautions

EU Battery Directive (2006/66/EC) and EU Battery Regulation (EU 2023/1542) requires the following when marketing or exporting batteries and/or devices with built-in batteries to EU member states.

- To print the symbol on batteries, where that is not possible, on their manuals and their packaging.
- To explain the symbol in the manuals of the products.

Labeling

To market or export batteries and/or devices with built-in batteries, which have no symbol (1)(2), to EU member states on August 18, 2024 or later, print the symbol (1)(2) shown in the figure above on the batteries, or their manuals and their packaging.
To market or export batteries and/or devices with built-in batteries, which have no symbol (1)(2), to EU member states on August 17, 2024 or before, print the symbol (1) shown in the figure above on the batteries, or their packaging.

Explaining the symbol in the manuals

To export devices incorporating Mitsubishi programmable controller to EU member states on August 18, 2024 or later, provide the latest manuals that include the explanation of the symbol (1)(2). If no Mitsubishi manuals or any old manuals without the explanation of the symbol (1)(2) are provided, separately attach an explanatory note regarding the symbol (1)(2) to each manual of the devices.

Point

The requirements apply to batteries and/or devices with built-in batteries manufactured before the enforcement date of EU Battery Directive (2006/66/EC), or EU Battery Regulation (EU 2023/1542).

Appendix 5 Versions That Support Extension Devices

This section describes the firmware versions of the CPU modules and software versions of the engineering tool that support the extension devices.

- F: Firmware version of the CPU module
- S: Software version of GX Works3
- O: Versions of the other tools
- ○: Available from the first released product
- ×: Not available

For the versions that support the functions added to or changed in the extension devices or engineering tools, refer to the manuals for each module.

The firmware versions can be checked with the module diagnostics (CPU diagnostics). For the module diagnostics (CPU diagnostics), refer to the following.

☞ Page 277 Module diagnostics

For the software versions, refer to the following.

📖GX Works3 Operating Manual

I/O module (extension cable type)

Product	Model	Available version		
		FX5S	FX5UJ	FX5U/ FX5UC
Input module	FX5-8EX/ES, FX5-16EX/ES	×	F: ○ S: 1.060N	F: ○ S: 1.007H
Output module	FX5-8EYR/ES, FX5-8EYT/ES, FX5-8EYT/ESS, FX5-16EYR/ES, FX5-16EYT/ES, FX5-16EYT/ESS	×	F: ○ S: 1.060N	F: ○ S: 1.007H
I/O module	FX5-16ER/ES, FX5-16ET/ES, FX5-16ET/ESS	×	F: ○ S: 1.060N	F: ○ S: 1.007H
Powered I/O module	FX5-32ER/ES, FX5-32ET/ES, FX5-32ET/ESS	×	F: ○ S: 1.060N	F: ○ S: 1.007H
	FX5-32ER/DS, FX5-32ET/DS, FX5-32ET/DSS	×	F: ○ S: 1.060N	F: ○ S: 1.025B
High-speed pulse I/O module	FX5-16ET/ES-H, FX5-16ET/ESS-H	×	F: 1.030 S: 1.085P	F: 1.030 F: 1.025B

A

I/O module (extension connector type)

Product	Model	Available version		
		FX5S	FX5UJ	FX5U/ FX5UC
Input module	FX5-C16EX/D, FX5-C16EX/DS	×	F: ○ S: 1.060N	F: ○ S: 1.019V
	FX5-C32EX/D, FX5-C32EX/DS	×	F: ○ S: 1.060N	F: ○ S: 1.007H
	FX5-C32EX/DS-TS	×	F: ○ S: 1.060N	F: 1.050*1 S: 1.035M
Output module	FX5-C16EYT/D, FX5-C16EYT/DSS	×	F: ○ S: 1.060N	F: ○ S: 1.019V
	FX5-C32EYT/D, FX5-C32EYT/DSS	×	F: ○ S: 1.060N	F: ○ S: 1.007H
	FX5-C16EYR/D-TS	×	F: ○ S: 1.060N	F: 1.050*1 S: 1.050C
	FX5-C32EYT/D-TS, FX5-C32EYT/DSS-TS	×	F: ○ S: 1.060N	F: 1.050*1 S: 1.035M
I/O module	FX5-C32ET/D, FX5-C32ET/DSS	×	F: ○ S: 1.060N	F: ○ S: 1.025B
	FX5-C32ET/DS-TS, FX5-C32ET/DSS-TS	×	F: ○ S: 1.060N	F: 1.050*1 S: 1.035M

*1 For the FX5UC-32MT/DS(S)-TS and FX5UC-32MR/DS-TS, the modules with product numbers 178**** or later are supported.
For the other FX5UC CPU modules and FX5U CPU modules, the modules with product numbers 17***** or later are supported.

Intelligent function module

Product	Model	Available version		
		FX5S	FX5UJ	FX5U/ FX5UC
Analog input module	FX5-4AD	×	F: ○ S: 1.060N	F: 1.050 S: 1.040S
Analog output module	FX5-4DA	×	F: ○ S: 1.060N	F: 1.050 S: 1.040S
Multiple input module	FX5-8AD	×	F: ○ S: 1.060N	F: 1.050 S: 1.035M
Temperature controller module	FX5-4LC	×	F: ○ S: 1.060N	F: 1.050 S: 1.035M
Positioning module	FX5-20PG-P	×	F: ○ S: 1.060N	F: 1.050 S: 1.035M
	FX5-20PG-D	×	F: ○ S: 1.060N	F: 1.050 S: 1.050C
High-speed counter module	FX5-2HC/ES	×	F: 1.060 S: 1.100E	F: 1.300 S: 1.100E
Simple Motion module	FX5-40SSC-S	×	F: ○ S: 1.060N	F: ○ S: 1.007H
	FX5-80SSC-S	×	F: ○ S: 1.060N	F: 1.014 S: 1.030G
Motion module	FX5-40SSC-G, FX5-80SSC-G	×	×	F: 1.230 S: 1.072A
Ethernet module	FX5-ENET	×	F: ○ S: 1.060N O: 1.00A*1	F: 1.110 S: 1.050C O: 1.00A*1
	FX5-ENET/IP	×	F: ○ S: 1.060N O: 1.00A*2	F: 1.110 S: 1.050C O: 1.00A*2
EtherNet/IP module	FX5-EIP	×	F: 1.100 S: 1.120A	F: 1.340 S: 1.120A
OPC UA module	FX5-OPC	×	×	F: 1.245 S: 1.077F O: 1.00A*3

Product	Model	Available version		
		FX5S	FX5UJ	FX5U/ FX5UC
CC-Link IE TSN master/local module	FX5-CCLGN-MS	×	F: 1.040 S: 1.090U	F: 1.210 S: 1.065T
CC-Link IE Field Network intelligent device station module	FX5-CCLIEF	×	F: ○ S: 1.060N	F: 1.030 S: 1.025B
CC-Link system master/intelligent device module	FX5-CCL-MS	×	F: ○ S: 1.060N	F: 1.050 S: 1.035M
AnyWireASLINK system master module	FX5-ASL-M	×	F: ○ S: 1.060N	F: 1.050 S: 1.035M
PROFIBUS-DP master module	FX5-DP-M	×	F: ○ S: 1.060N O: 1.03D*4	F: 1.110 S: 1.050C O: 1.02C*4

*1 The version refers to the compatible software version of Certificate Configuration Tool for FX5-ENET.
*2 The version refers to the compatible software version of EtherNet/IP Configuration Tool for FX5-ENET/IP.
*3 The version refers to the compatible software version of OPC UA Module Configuration Tool.
*4 The version refers to the compatible software version of PROFIBUS Configuration Tool.

FX5 safety extension module

Product	Model	Available version		
		FX5S	FX5UJ	FX5U/ FX5UC
Safety main module	FX5-SF-MU4T5	×	F: 1.010 S: 1.075D	F: 1.200 S: 1.060N
Safety input expansion module	FX5-SF-8DI4	×	F: 1.010 S: 1.075D	F: 1.200 S: 1.060N

Extension power supply module

Product	Model	Available version		
		FX5S	FX5UJ	FX5U/ FX5UC
Extension power supply module (extension cable type)	FX5-1PSU-5V	×	F: ○ S: 1.060N	F: ○ S: 1.007H
Extension power supply module (extension connector type)	FX5-C1PS-5V	×	F: ○ S: 1.060N	F: ○ S: 1.019V

Connector conversion module

Product	Model	Available version		
		FX5S	FX5UJ	FX5U/ FX5UC
Connector conversion module	FX5-CNV-IF	×	F: ○ S: 1.060N	F: ○ S: 1.007H
	FX5-CNV-IFC	×	×	×

Bus conversion module

Product	Model	Available version		
		FX5S	FX5UJ	FX5U/ FX5UC
Bus conversion module	FX5-CNV-BUS	×	×	F: ○ S: 1.007H
	FX5-CNV-BUSC	×	×	F: ○ S: 1.007H

Expansion board

Product	Model	Available version		
		FX5S	FX5UJ	FX5U/ FX5UC
RS-232C communication	FX5-232-BD	F: ○ S: 1.080J	F: ○ S: 1.060N	F: ○ S: 1.007H
RS-485 communication	FX5-485-BD	F: ○ S: 1.080J	F: ○ S: 1.060N	F: ○ S: 1.007H
RS-422 communication	FX5-422-BD-GOT	F: ○ S: 1.080J	F: ○ S: 1.060N	F: ○ S: 1.007H

Extension module

Product	Model	Available version		
		FX5S	FX5UJ	FX5U/ FX5UC
SD memory card module	FX5-SDCD	F: ○ S: 1.080J	×	×

Expansion adapter

Product	Model	Available version		
		FX5S	FX5UJ	FX5U/ FX5UC
Analog input expansion adapter	FX5-4AD-ADP	F: ○ S: 1.080J	F: ○ S: 1.060N	F: 1.010 S: 1.007H
Analog output expansion adapter	FX5-4DA-ADP	F: ○ S: 1.080J	F: ○ S: 1.060N	F: 1.010 S: 1.007H
Analog I/O expansion adapter	FX5-4A-ADP	F: ○ S: 1.080J	F: 1.010 S: 1.075D	F: 1.240 S: 1.075D
RTD temperature sensor input expansion adapter	FX5-4AD-PT-ADP	F: ○ S: 1.080J	F: ○ S: 1.060N	F: 1.04 S: 1.030G
Thermocouple temperature sensor input expansion adapter	FX5-4AD-TC-ADP	F: ○ S: 1.080J	F: ○ S: 1.060N	F: 1.04 S: 1.030G
Expansion adapter for RS-232C communications	FX5-232ADP	F: ○ S: 1.080J	F: ○ S: 1.060N	F: ○ S: 1.007H
Expansion adapter for RS-485 communications	FX5-485ADP	F: ○ S: 1.080J	F: ○ S: 1.060N	F: ○ S: 1.007H

Extended extension cable and connector conversion adapter

Product	Model	Available version		
		FX5S	FX5UJ	FX5U/ FX5UC
Extended extension cable	FX5-30EC, FX5-65EC	×	F: ○	F: ○
Connector conversion adapter	FX5-CNV-BC	×	F: ○	F: ○

MEMO

INDEX

B

BAT LED 69
Battery connector 70
Battery holder 70
Built-in Ethernet communication connector 63
Built-in USB communication connector 64

C

CARD LED 66
CPU module fixing screw hole 65,71

D

DIN rail mounting groove 65
DIN rail mounting hook 63
DISP switch 72

E

ERR LED 63
Expansion adapter connecting hook 63
Expansion adapter connector cover 65
Expansion board connector 64
Expansion board connector cover 63
Extension connector 67
Extension connector cover 66

G

Genuine product certification label 65

I

Input display LED 63
Installing directly 164,167

M

Memory capacity 85

N

Nameplate 65
Number of remote I/O points 52,85

O

Operation status display LED 72
Output display LED 63

P

P.RUN LED 63
Peripheral connecting connector cover 63
PWR LED 63

R

RD LED 69
RS-485 terminal resistor selector switch 70
RUN/STOP/RESET switch 64

S

SD LED 69
SD memory card disable switch 67
SD memory card slot 67
Sink input 191
Sink output 210
Source input 191
Source output 210

T

Terminal 64
Terminal block cover 63
Terminal block mounting screws 67
Top cover 69

MEMO

REVISIONS

*The manual number is given on the bottom left of the back cover.

Revision date	*Manual number	Description
October 2021	SH(NA)-082452ENG-A	First edition
January 2022	SH(NA)-082452ENG-B	■Modified parts Section 2.2, 5.4
April 2022	SH(NA)-082452ENG-C	■Modified parts SAFETY PRECAUTIONS, GENERIC TERMS AND ABBREVIATIONS, Section 2.1, 2.2, 2.3, 2.4, 2.5, 3.5, 5.3, 5.4, 5.9, 6.2, 6.3, 6.4, 6.5, Chapter 11, Section 13.2, 13.5, Appendix 2
October 2022	SH(NA)-082452ENG-D	■Modified parts SAFETY PRECAUTIONS, Section 2.2, 3.1, 5.1, 5.9, 6.1, 6.3, Chapter 11, Section 13.2, 13.4, 13.5, 14.6, Appendix 2
April 2023	SH(NA)-082452ENG-E	■Modified parts Chapter 4, Section 5.1, 5.9, 5.10, Chapter 11, Section 13.2, 13.7
July 2023	SH(NA)-082452ENG-F	■Modified parts INTRODUCTION, RELEVANT MANUALS, GENERIC TERMS AND ABBREVIATIONS, Chapter 1, Section 2.2, 3.1, Chapter 4, Section 5.2, 5.3, 5.6, 5.7, 5.8, 5.9, 5.10, Chapter 11, Section 13.1, 13.5, 13.7, 13.8, 14.4, Appendix 2
October 2023	SH(NA)-082452ENG-G	■Modified parts SAFETY PRECAUTIONS, INTRODUCTION, RELEVANT MANUALS, GENERIC TERMS AND ABBREVIATIONS, Section 2.2, Chapter 4, Section 5.9, 6.1, 6.2, 6.3, Chapter 9, 10, 12, 13, Section 15.3, 15.5, 15.7
December 2023	SH(NA)-082452ENG-H	■Modified part Section 5.5
July 2024	SH(NA)-082452ENG-J	■Modified parts INTRODUCTION, GENERIC TERMS AND ABBREVIATIONS, Chapter 1, Section 2.2, Chapter 5, 14, 15, Section 16.6, Appendix 2, 4
October 2024	SH(NA)-082452ENG-K	■Modified parts Section 5.8, Chapter 13, Section 15.8
April 2025	SH(NA)-082452ENG-L	■Modified parts SAFETY PRECAUTIONS, Section 3.1, Appendix 1, 5
October 2025	SH(NA)-082452ENG-M	■Modified parts GENERIC TERMS AND ABBREVIATIONS, Chapter 2, Section 3.1, 15.7, Appendix 5
March 2026	SH(NA)-082452ENG-N	■Modified part SAFETY PRECAUTIONS

Japanese manual number: SH-082451-N

This manual confers no industrial property rights or any rights of any other kind, nor does it confer any patent licenses. Mitsubishi Electric Corporation cannot be held responsible for any problems involving industrial property rights which may occur as a result of using the contents noted in this manual.

© 2021 MITSUBISHI ELECTRIC CORPORATION

WARRANTY

Please confirm the following product warranty details before using this product.

1. Gratis Warranty Term and Gratis Warranty Range

If any faults or defects (hereinafter "Failure") found to be the responsibility of Mitsubishi occurs during use of the product within the gratis warranty term, the product shall be repaired at no cost via the sales representative or Mitsubishi Service Company. However, if repairs are required onsite at domestic or overseas location, expenses to send an engineer will be solely at the customer's discretion. Mitsubishi shall not be held responsible for any re-commissioning, maintenance, or testing on-site that involves replacement of the failed module.

[Gratis Warranty Term]

The gratis warranty term of the product shall be for one year after the date of purchase or delivery to a designated place. Note that after manufacture and shipment from Mitsubishi, the maximum distribution period shall be six (6) months, and the longest gratis warranty term after manufacturing shall be eighteen (18) months. The gratis warranty term of repair parts shall not exceed the gratis warranty term before repairs.

[Gratis Warranty Range]

(1) The range shall be limited to normal use within the usage state, usage methods and usage environment, etc., which follow the conditions and precautions, etc., given in the instruction manual, user's manual and caution labels on the product.

(2) Even within the gratis warranty term, repairs shall be charged for in the following cases.
   1. Failure occurring from inappropriate storage or handling, carelessness or negligence by the user. Failure caused by the user's hardware or software design.
   2. Failure caused by unapproved modifications, etc., to the product by the user.
   3. When the Mitsubishi product is assembled into a user's device, Failure that could have been avoided if functions or structures, judged as necessary in the legal safety measures the user's device is subject to or as necessary by industry standards, had been provided.
   4. Failure that could have been avoided if consumable parts (battery, backlight, fuse, etc.) designated in the instruction manual had been correctly serviced or replaced.
   5. Relay failure or output contact failure caused by usage beyond the specified life of contact (cycles).
   6. Failure caused by external irresistible forces such as fires or abnormal voltages, and failure caused by force majeure such as earthquakes, lightning, wind and water damage.
   7. Failure caused by reasons unpredictable by scientific technology standards at time of shipment from Mitsubishi.
   8. Any other failure found not to be the responsibility of Mitsubishi or that admitted not to be so by the user.

2. Onerous repair term after discontinuation of production

(1) Mitsubishi shall accept onerous product repairs for seven (7) years after production of the product is discontinued.
Discontinuation of production shall be notified with Mitsubishi Technical Bulletins, etc.

(2) Product supply (including repair parts) is not available after production is discontinued.

3. Overseas service

Overseas, repairs shall be accepted by Mitsubishi's local overseas FA Center. Note that the repair conditions at each FA Center may differ.

4. Exclusion of loss in opportunity and secondary loss from warranty liability

Regardless of the gratis warranty term, Mitsubishi shall not be liable for compensation to:

(1) Damages caused by any cause found not to be the responsibility of Mitsubishi.

(2) Loss in opportunity, lost profits incurred to the user by Failures of Mitsubishi products.

(3) Special damages and secondary damages whether foreseeable or not, compensation for accidents, and compensation for damages to products other than Mitsubishi products.

(4) Replacement by the user, maintenance of on-site equipment, start-up test run and other tasks.

5. Changes in product specifications

The specifications given in the catalogs, manuals or technical documents are subject to change without prior notice.

6. Product application

(1) In using the Mitsubishi MELSEC programmable controller, the usage conditions shall be that the application will not lead to a major accident even if any problem or fault should occur in the programmable controller device, and that backup and fail-safe functions are systematically provided outside of the device for any problem or fault.

(2) The Mitsubishi programmable controller has been designed and manufactured for applications in general industries, etc. Thus, applications in which the public could be affected such as in nuclear power plants and other power plants operated by respective power companies, and applications in which a special quality assurance system is required, such as for railway companies or public service purposes shall be excluded from the programmable controller applications.
In addition, applications in which human life or property that could be greatly affected, such as in aircraft, medical applications, incineration and fuel devices, manned transportation, equipment for recreation and amusement, and safety devices, shall also be excluded from the programmable controller range of applications.
However, in certain cases, some applications may be possible, providing the user consults their local Mitsubishi representative outlining the special requirements of the project, and providing that all parties concerned agree to the special circumstances, solely at the user's discretion.

(3) Mitsubishi shall have no responsibility or liability for any problems involving programmable controller trouble and system trouble caused by DoS attacks, unauthorized access, computer viruses, and other cyberattacks.

INFORMATION AND SERVICES

For further information and services, please contact your local Mitsubishi Electric sales office or representative.
Visit our website to find our locations worldwide.

MITSUBISHI ELECTRIC Factory Automation Global Website
Locations Worldwide
www.MitsubishiElectric.com/fa/about-us/overseas/

TRADEMARKS

Microsoft and Windows are trademarks of the Microsoft group of companies.
Anywire and AnyWireASLINK are either registered trademarks or trademarks of Anywire Corporation.
Unicode is either a registered trademark or a trademark of Unicode, Inc. in the United States and other countries.
The company names, system names and product names mentioned in this manual are either registered trademarks or trademarks of their respective companies.
In some cases, trademark symbols such as '™' or '®' are not specified in this manual.

Manual number: SH(NA)-082452ENG-N
MODEL: FX5-U-HW-E

MITSUBISHI ELECTRIC CORPORATION

HEAD OFFICE: TOKYO BLDG., 2-7-3, MARUNOUCHI, CHIYODA-KU, TOKYO 100-8310, JAPAN
NAGOYA WORKS: 1-14, YADA-MINAMI 5-CHOME, HIGASHI-KU, NAGOYA 461-8670, JAPAN

When exported from Japan, this manual does not require application to the Ministry of Economy, Trade and Industry for service transaction permission.

Specifications subject to change without notice.