MITSUBISHI ELECTRIC

Programmable Controller

MELSEC iQ-F series

Transition from MELSEC FX3 Series to MELSEC iQ-F Series Handbook

SAFETY PRECAUTIONS

(Read these precautions before use.)

Before using this product, please read this manual and the relevant manuals introduced in this manual carefully and pay full attention to safety in order to handle the product correctly.

This manual classifies the safety precautions into two categories: [⚠WARNING] and [⚠CAUTION].

⚠ **WARNING**	Indicates that incorrect handling may cause hazardous conditions, resulting in death or severe injury.
⚠ **CAUTION**	Indicates that incorrect handling may cause hazardous conditions, resulting in minor or moderate injury or property damage.

Depending on the circumstances, failure to observe procedures indicated by [⚠CAUTION] may also cause severe injury.

It is important to follow all precautions for personal safety.

Store this manual in a safe place so that it can be read whenever necessary. Always forward it to the end user.

[DESIGN PRECAUTIONS]

⚠WARNING

- Make sure to set up the following safety circuits outside the PLC to ensure safe system operation even during external power supply problems or PLC failure. Otherwise, malfunctions or incorrect outputs may cause serious accidents.
  - Most importantly, set up the following: an emergency stop circuit, a protection circuit, an interlock circuit for opposite movements (such as normal vs. reverse rotation), and an interlock circuit (to prevent damage to the equipment at the upper and lower positioning limits).
  - Note that when the CPU module detects an error, such as a watchdog timer error, during self-diagnosis, all outputs are turned off. Also, when an error that cannot be detected by the CPU module occurs in an input/output control block, output control may be disabled. External circuits and mechanisms should be designed to ensure safe machinery operation in such a case.
  - Note that the output current of the 24 V DC service power supply varies depending on the model and the absence/presence of extension modules. If an overload occurs, the voltage automatically drops, inputs in the PLC are disabled, and all outputs are turned off. External circuits and mechanisms should be designed to ensure safe machinery operation in such a case.
  - Note that when an error occurs in a relay, triac or transistor of an output circuit, the output might stay on or off. For output signals that may lead to serious accidents, external circuits and mechanisms should be designed to ensure safe machinery operation in such a case.
- Construct an interlock circuit in the program so that the whole system always operates on the safe side before executing the control (for data change) of the PLC in operation.
  Read the manual thoroughly and ensure complete safety before executing other controls (for program change, parameter change, forcible output and operation status change) of the PLC in operation.
  Otherwise, the machine may be damaged and accidents may occur due to erroneous operations.
- In an output circuit, when a load current exceeding the current rating or an overcurrent caused by a load short-circuit flows for a long time, it may cause smoke and fire. To prevent this, configure an external safety circuit, such as a fuse.
- For the operating status of each station after a communication failure of the network, refer to relevant manuals for the network. Incorrect output or malfunction may result in an accident.

[DESIGN PRECAUTIONS]

⚠CAUTION

- When an inductive load such as a lamp, heater, or solenoid valve is controlled, a large current (approximately ten times greater than normal) may flow when the output is turned from off to on. Take proper measures so that the flowing current dose not exceed the value corresponding to the maximum load specification of the resistance load.
- After the CPU module is powered on or is reset, the time taken to enter the RUN status varies depending on the system configuration, parameter settings, and/or program size.
  Design circuits so that the entire system will always operate safely, regardless of this variation in time.
- Simultaneously turn on and off the power supplies of the CPU module and extension modules.
- If a long-time power failure or an abnormal voltage drop occurs, the PLC stops, and output is turned off. When the power supply is restored, it will automatically restart (when the RUN/STOP/RESET switch is on the RUN side).

[Security Precautions]

⚠WARNING

- To maintain the security (confidentiality, integrity, and availability) of the programmable controller and the system against unauthorized access, denial-of-service (DoS) attacks, computer viruses, and other cyberattacks from unreliable networks and devices via the network, take appropriate measures such as firewalls, virtual private networks (VPNs), and antivirus solutions.

[INSTALLATION PRECAUTIONS]

⚠WARNING

- Make sure to cut off all phases of the power supply externally before attempting installation or wiring work. Failure to do so may cause electric shock or damage to the product.
- Use the product within the generic environment specifications described in the User's Manual (Hardware) for the CPU module to be used.
  Never use the product in areas with excessive dust, oily smoke, conductive dusts, corrosive gas (salt air, Cl_2, H_2S, SO_2 or NO_2), flammable gas, vibration or impacts, or expose it to high temperature, condensation, or rain and wind.
  If the product is used in such conditions, electric shock, fire, malfunctions, deterioration or damage may occur.

[INSTALLATION PRECAUTIONS]

⚠CAUTION

- Do not touch the conductive parts of the product directly. Doing so may cause device failures or malfunctions.
- When drilling screw holes or wiring, make sure that cutting and wiring debris do not enter the ventilation slits of the PLC. Failure to do so may cause fire, equipment failures or malfunctions.
- For the product supplied together with a dust proof sheet, the sheet should be affixed to the ventilation slits before the installation and wiring work to prevent foreign objects such as cutting and wiring debris.
  However, when the installation work is completed, make sure to remove the sheet to provide adequate ventilation. Failure to do so may cause fire, equipment failures or malfunctions.
- Install the product on a flat surface. If the mounting surface is rough, undue force will be applied to the PC board, thereby causing nonconformities.
- Install the product securely using a DIN rail or mounting screws.
- Connect the expansion board and expansion adapter securely to their designated connectors. Loose connections may cause malfunctions.
- Make sure to affix the expansion board with tapping screws.
  Tightening torque should follow the specifications in the manual.
  If the screws are tightened outside of the specified torque range, poor connections may cause malfunctions.
- Work carefully when using a screwdriver such as installation of the product. Failure to do so may cause damage to the product or accidents.
- Connect the extension cables, peripheral device cables, input/output cables and battery connecting cable securely to their designated connectors. Loose connections may cause malfunctions.
- When using an SD memory card, insert it into the SD memory card slot. Check that it is inserted completely. Poor contact may cause malfunction.
- Turn off the power to the PLC before attaching or detaching the following devices. Failure to do so may cause equipment failures or malfunctions.
  - Peripheral devices, expansion board, expansion adapter, and connector conversion adapter
  - Extension modules, bus conversion module and connector conversion module
  - Battery

[WIRING PRECAUTIONS]

⚠WARNING

- Make sure to cut off all phases of the power supply externally before attempting installation or wiring work. Failure to do so may cause electric shock or damage to the product.
- Make sure to attach the terminal cover, provided as an accessory, before turning on the power or initiating operation after installation or wiring work. Failure to do so may cause electric shock.
- The temperature rating of the cable should be 80℃ or more.
  It may differ depending on the extension devices. For details, refer to the user's manual of the extension devices.
- Make sure to wire the screw terminal block in accordance with the following precautions. Failure to do so may cause electric shock, equipment failures, a short-circuit, wire breakage, malfunctions, or damage to the product.
  - The disposal size of the cable end should follow the dimensions described in the manual.
  - Tightening torque should follow the specifications in the manual.
  - Tighten the screws using a Phillips-head screwdriver No. 2 (shaft diameter 6 mm or less). Make sure that the screwdriver does not touch the partition part of the terminal block.
- Make sure to properly wire to the terminal block (European type) in accordance with the following precautions. Failure to do so may cause electric shock, equipment failures, a short-circuit, wire breakage, malfunctions, or damage to the product.
  - The disposal size of the cable end should follow the dimensions described in the manual.
  - Tightening torque should follow the specifications in the manual.
  - Twist the ends of stranded wires and make sure that there are no loose wires.
  - Do not solder-plate the electric wire ends.
  - Do not connect more than the specified number of wires or electric wires of unspecified size.
  - Fix the electric wires so that neither the terminal block nor the connected parts are directly stressed.
- Make sure to properly wire to the spring clamp terminal block in accordance with the following precautions. Failure to do so may cause electric shock, equipment failures, a short-circuit, wire breakage, malfunctions, or damage to the product.
  - The disposal size of the cable end should follow the dimensions described in the manual.
  - Twist the ends of stranded wires and make sure that there are no loose wires.
  - Do not solder-plate the electric wire ends.
  - Do not connect more than the specified number of wires or electric wires of unspecified size.
  - Fix the electric wires so that neither the terminal block nor the connected parts are directly stressed.

[WIRING PRECAUTIONS]

⚠CAUTION

- Do not supply power to the [24+] and [24V] terminals (24 V DC service power supply) on the CPU module or extension modules. Doing so may cause damage to the product.
- Perform class D grounding (grounding resistance: 100 Ω or less) to the grounding terminal on the CPU module or extension modules with a wire 2 mm^2 or thicker.
  Do not use common grounding with heavy electrical systems (refer to the User's Manual (Hardware) for the CPU module to be used).
- Connect the power supply wiring to the dedicated terminals described in this manual. If an AC power supply is connected to a DC input/output terminal or DC power supply terminal, the PLC will burn out.
- Do not wire vacant terminals externally. Doing so may cause damage to the product.
- Install module so that excessive force will not be applied to terminal blocks, power connectors, I/O connectors, communication connectors, or communication cables. Failure to do so may result in wire damage/breakage or PLC failure.
- Make sure to observe the following precautions in order to prevent any damage to the machinery or accidents due to malfunction of the PLC caused by abnormal data written to the PLC due to the effects of noise.
  - Do not bundle the power line, control line and communication cables together with or lay them close to the main circuit, high-voltage line, load line or power line. As a guideline, lay the power line, control line and communication cables at least 100 mm away from the main circuit, high-voltage line, load line or power line.
  - Ground the shield of the shielded wire or shielded cable at one point on the PLC. However, do not use common grounding with heavy electrical systems.
  - Ground the shield of the analog input/output cable in accordance with the manuals of each model. However, do not use common grounding with heavy electrical systems.

[STARTUP AND MAINTENANCE PRECAUTIONS]

⚠WARNING

- Do not touch any terminal while the PLC's power is on. Doing so may cause electric shock or malfunctions.
- Before cleaning or retightening terminals, cut off all phases of the power supply externally. Failure to do so may cause electric shock.
- Before modifying the program in operation, forcible output, running or stopping the PLC, read through this manual carefully, and ensure complete safety. An operation error may damage the machinery or cause accidents.
- Do not change the program in the PLC from two or more peripheral devices at the same time. (i.e. from an engineering tool and a GOT) Doing so may cause destruction or malfunction of the PLC program.
- Use the battery for memory backup in conformance to the User's Manual (Hardware) for the CPU module to be used.
  - Use the battery for the specified purpose only.
  - Connect the battery correctly.
  - Do not charge, disassemble, heat, put in fire, short-circuit, connect reversely, weld, swallow or burn the battery, or apply excessive forces (vibration, impact, drop, etc.) to the battery.
  - Do not store or use the battery at high temperatures or expose to direct sunlight.
  - Do not expose to water, bring near fire or touch liquid leakage or other contents directly.
  - When replacing the battery, make sure to use our specified product (FX3U-32BL).
  - When a battery error occurs ("BAT" LED is lit in red), follow the description in the User's Manual (Hardware) for the CPU module to be used.

  Incorrect handling of the battery may cause excessive heat generation, bursting, ignition, liquid leakage or deformation, and lead to injury, fire or failures and malfunction of facilities and other equipment.

[STARTUP AND MAINTENANCE PRECAUTIONS]

⚠CAUTION

- Do not disassemble or modify the PLC. Doing so may cause fire, equipment failures, or malfunctions. For repair, contact your local Mitsubishi Electric representative.
- After the first use of the SD memory card, do not insert/remove the memory card more than 500 times. Exceeding 500 times may cause malfunction.
- Turn off the power to the PLC before connecting or disconnecting any extension cable. Failure to do so may cause equipment failures or malfunctions.
- Turn off the power to the PLC before attaching or detaching the following devices. Failure to do so may cause equipment failures or malfunctions.
  - Peripheral devices, expansion board, expansion adapter, and connector conversion adapter
  - Extension modules, bus conversion module and connector conversion module
  - Battery
- Do not use the chemicals for cleaning.
- If there is the possibility of touching the PLC inside a control panel in maintenance, make sure to discharge to avoid the influence of static electricity.
- Since there are risks such as burn injuries, please do not touch the surface of the equipment with bare hands when it is operating in an environment where the ambient temperature exceeds 50℃.

[OPERATION PRECAUTIONS]

⚠CAUTION

- Construct an interlock circuit in the program so that the whole system always operates on the safe side before executing the control (for data change) of the PLC in operation. Read the manual thoroughly and ensure complete safety before executing other controls (for program change, parameter change, forcible output and operation status change) of the PLC in operation. Otherwise, the machine may be damaged and accidents may occur due to erroneous operations.

[DISPOSAL PRECAUTIONS]

⚠CAUTION

- Please contact a certified electronic waste disposal company for the environmentally safe recycling and disposal of your device.
- When disposing of batteries, separate them from other waste according to local regulations. For details of the Battery Directive in EU countries, refer to the User's Manual (Hardware) for the CPU module to be used.

[TRANSPORTATION PRECAUTIONS]

⚠CAUTION

- When transporting the PLC with the optional battery, turn on the PLC before shipment, confirm that the battery mode is set using a parameter and the BAT LED is OFF, and check the battery life. If the PLC is transported with the BAT LED ON or the battery exhausted, the battery-backed data may be unstable during transportation.
- The PLC is a precision instrument. During transportation, avoid impacts larger than those specified in the general specifications of the User's Manual (Hardware) for the CPU module to be used by using dedicated packaging boxes and shock-absorbing palettes. Failure to do so may cause failures in the PLC. After transportation, verify operation of the PLC and check for damage of the mounting part, etc.
- When transporting lithium batteries, follow required transportation regulations. For details on the regulated products, refer to the User's Manual (Hardware) for the CPU module to be used.
- When fumigants that contain halogen materials such as fluorine, chlorine, bromine, and iodine are used for disinfecting and protecting wooden packaging from insects, they cause malfunction when entering our products. Please take necessary precautions to ensure that remaining materials from fumigant do not enter our products, or treat packaging with methods other than fumigation (heat method). Additionally, disinfect and protect wood from insects before packing products.

INTRODUCTION

This Replacement Manual describes CPU module and extension device model selection for replacement from the MELSEC FX3 series to the MELSEC iQ-F series.
When replacing the MELSEC FX3 series with the MELSEC iQ-F series, the following items need to be considered beforehand: the replacement procedure, installation location, specifications comparison of the existing module and the new module, method to replace the network. For smooth replacement, please carefully consider beforehand.

Regarding use of this product

- This product has been manufactured as a general-purpose part for general industries, and has not been designed or manufactured to be incorporated in a device or system used in purposes related to human life.
- Before using the product for special purposes such as nuclear power, electric power, aerospace, medicine or passenger movement vehicles, consult Mitsubishi Electric.
- This product has been manufactured under strict quality control. However when installing the product where major accidents or losses could occur if the product fails, install appropriate backup or failsafe functions in the system.

Note

- If in doubt at any stage during the installation of the product, always consult a professional electrical engineer who is qualified and trained in the local and national standards. If in doubt about the operation or use, please consult the nearest Mitsubishi Electric representative.
- Since the examples indicated by this manual, technical bulletin, catalog, etc. are used as a reference, please use it after confirming the function and safety of the equipment and system. Mitsubishi Electric will accept no responsibility for actual use of the product based on these illustrative examples.
- This manual content, specification etc. may be changed, without a notice, for improvement.
- The information in this manual has been carefully checked and is believed to be accurate; however, if you notice a doubtful point, an error, etc., please contact the nearest Mitsubishi Electric representative. When doing so, please provide the manual number given at the end of this manual.

CONTENTS

SAFETY PRECAUTIONS 1
INTRODUCTION 8
RELEVANT MANUALS 12
TERMS 13
GENERIC TERMS AND ABBREVIATIONS 13

CHAPTER 1 OUTLINE 15

1.1 Outline of the MELSEC iQ-F Series 15
Outstanding performance 15
Superior drive control 15
Improved programming environment 16
1.2 Substitute Models 16
Selection and replacement of the models 17

CHAPTER 2 REPLACEMENT FROM FX3G TO FX5S 18

2.1 Outline 18
2.2 Replacement Procedure 18
2.3 Selection of Substitute Models 19
Recommended substitute models 19
Precautions regarding the hardware 22
2.4 Conversion of the Projects 25
Operation method for replacing projects 25
Precautions when converting the projects 28
Precautions when replacing the parameters 28
Precautions when replacing other functions 29
2.5 Replacement of the PLC 34
2.6 Specifications Comparison 34

CHAPTER 3 REPLACEMENT FROM FX3GE TO FX5S 36

3.1 Outline 36
3.2 Replacement procedure 36
3.3 Selection of Substitute Models 37
Recommended substitute models 37
Precautions regarding the hardware 40
3.4 Replacement of the PLC 42

CHAPTER 4 REPLACEMENT FROM FX3G TO FX5UJ 43

4.1 Outline 43
4.2 Replacement Procedure 43
4.3 Selection of Substitute Models 44
Recommended substitute models 44
Precautions regarding the hardware 48
4.4 Conversion of the Projects 51
Operation method for replacing projects 51
Precautions when Converting the Projects 54
Precautions when replacing the parameters 54
Precautions when replacing other functions 55
4.5 Replacement of the PLC 59

4.6 **Specifications Comparison** 59

CHAPTER 5 REPLACEMENT FROM FX3GC TO FX5UC 61

5.1 **Outline** 61
5.2 **Replacement Procedure** 61
5.3 **Selection of Substitute Models** 62
Recommended substitute models 62
Precautions regarding the hardware 65
5.4 **Conversion of the Projects** 68
Operation method for replacing projects 68
Precautions when converting the projects 71
Precautions when replacing the parameters 71
Precautions when replacing other functions 72
5.5 **Replacement of the PLC** 75

CHAPTER 6 REPLACEMENT FROM FX3GE TO FX5UJ 76

6.1 **Outline** 76
6.2 **Replacement Procedure** 76
6.3 **Selection of Substitute Models** 77
Recommended substitute models 77
Precautions regarding the hardwarel 81
6.4 **Replacement of the PLC** 84

CHAPTER 7 REPLACEMENT FROM FX3U TO FX5UJ 85

7.1 **Outline** 85
7.2 **Replacement Procedure** 85
7.3 **Selection of Substitute Models** 86
Recommended substitute models 86
Precautions regarding the hardware 91
7.4 **Conversion of the Projects** 94
Operation method for replacing projects 94
Precautions when converting the projects 97
Precautions when replacing the parameters 97
Precautions when replacing other functions 97
7.5 **Replacement of the PLC** 101
7.6 **Specifications Comparison** 101

CHAPTER 8 REPLACEMENT FROM FX3U TO FX5U 103

8.1 **Outline** 103
8.2 **Replacement Procedure** 103
8.3 **Selection of Substitute Models** 104
Recommended substitute models 104
Precautions regarding the hardware 109
8.4 **Conversion of the Projects** 112
Operation method for replacing projects 112
Precautions when converting the projects 115
Precautions when replacing the parameters 115
Precautions when replacing other functions 116
8.5 **Replacement of the PLC** 119
8.6 **Specifications Comparison** 119

CHAPTER 9 REPLACEMENT FROM FX3UC TO FX5UC 121

9.1 Outline . . . 121
9.2 Replacement Procedure . . . 121
9.3 Selection of Substitute Models . . . 122
Recommended substitute models . . . 122
Precautions regarding the hardware . . . 127
9.4 Conversion of the Projects . . . 130
Operation method for replacing projects . . . 130
Precautions when converting the projects . . . 133
Precautions when replacing the parameters . . . 133
Precautions when replacing other functions . . . 134
9.5 Replacement of the PLC . . . 137
9.6 Specifications Comparison . . . 138

APPENDICES 140

Appendix 1 Instruction Replacement List . . . 140
Appendix 2 Precautions for Instruction Replacement . . . 152
Appendix 3 Device Replacement List . . . 154
Appendix 4 Precautions for Device Replacement . . . 161
Appendix 5 Conversion of the SFC Program . . . 163
Differences in specifications after replacement . . . 163
Operation method for replacing projects . . . 164
Precautions when converting the projects . . . 167
Precautions when replacing the parameters . . . 167
Precautions when replacing the program . . . 168

INDEX 170

REVISIONS . . . 172
WARRANTY . . . 173
TRADEMARKS . . . 174

RELEVANT MANUALS

MELSEC iQ-F series

Manual name <manual number>	Description
MELSEC iQ-F FX5S/FX5UJ/FX5U/FX5UC User's Manual (Hardware) <SH-082452ENG>	Describes the details of hardware of the CPU module, including performance specifications, wiring, installation, and maintenance.
MELSEC iQ-F FX5 User's Manual (Application) <JY997D55401>	Describes the basic knowledge required for program design, functions of the CPU module, devices/labels, and parameters.
MELSEC iQ-F FX5 Programming Manual (Program Design) <JY997D55701>	Describes the specifications of ladder, ST, FBD/LD, and SFC programs, and labels.
MELSEC iQ-F FX5 Programming Manual (Instructions, Standard Functions/Function Blocks) <JY997D55801>	Describes the specifications of instructions and functions that can be used in programs.
MELSEC iQ-F FX5 User's Manual (Communication) <SH-082625ENG>	Describes the communication function built into the CPU module, as well as the communication function of the Ethernet module.
GX Works3 Operating Manual <SH-081215ENG>	Describes the system configuration, parameter settings, and online operations of GX Works3.
Transition from MELSEC FX3 Series to MELSEC iQ-F Series Handbook <SH-082703ENG> (This manual)	Describes the transition from the MELSEC FX3 series to the MELSEC iQ-F series.

MELSEC FX3 series

Manual name <manual number>	Description
FX3G Series User's Manual [Hardware Edition] <JY997D31301>	Describes hardware of FX3G Series, including input/output specifications, wiring, installation and maintenance.
FX3GE SERIES HARDWARE MANUAL <JY997D49401>	Describes hardware of FX3GE Series, including input/output specifications, wiring, installation and maintenance.
FX3U Series User's Manual [Hardware Edition] <JY997D16501>	Describes hardware of FX3U Series, including input/output specifications, wiring, installation and maintenance.
FX3UC Series User's Manual [Hardware Edition] <JY997D28701>	Describes hardware of FX3UC Series, including input/output specifications, wiring, installation and maintenance.
GX Works2 Version 1 Operating Manual (Common) <SH-080779ENG>	Describes the system configuration, parameter settings, and online operations of GX Works2.

TERMS

Unless otherwise specified, this manual uses the following terms.

Term	Description
Engineering tool	The product name of the software package for the MELSEC programmable controllers
SD memory card	An abbreviation for Secure Digital Memory Card. Device that stores data using flash memory.

GENERIC TERMS AND ABBREVIATIONS

Unless otherwise specified, this manual uses the following generic terms and abbreviations.

Generic term/abbreviation	Description
Analog adapter	A generic term for FX5-4AD-ADP, FX5-4DA-ADP, FX5-4AD-PT-ADP, FX5-4AD-TC-ADP, and FX5-4A-ADP
Battery	A generic term for FX3U-32BL
Bus conversion module	A generic term for bus conversion modules (extension cable type) and bus conversion modules (extension connector type)
Bus conversion module (extension cable type)	A generic term for FX5-CNV-BUS
Bus conversion module (extension connector type)	A generic term for FX5-CNV-BUSC
Communication adapter	A generic term for FX5-232ADP and FX5-485ADP
Communication board	A generic term for FX5-232-BD, FX5-485-BD, and FX5-422-BD-GOT
Communication function expansion board	A generic term for FX3G-232-BD, FX3G-485-BD, FX3G-485-BD-RJ, FX3G-422-BD, FX3U-232-BD, FX3U-485-BD, FX3U-422-BD, and FX3U-USB-BD
Connector conversion adapter	A generic term for FX5-CNV-BC
Connector conversion module	A generic term for connector conversion modules (extension cable type) and connector conversion modules (extension connector type)
Connector conversion module (extension cable type)	A generic term for FX5-CNV-IF
Connector conversion module (extension connector type)	A generic term for FX5-CNV-IFC
Expansion adapter	A generic term for adapters for FX5 CPU modules
Expansion board	A generic term for boards for FX5S CPU modules, FX5UJ CPU modules, and FX5U CPU modules
Extended extension cable	A generic term for FX5-30EC and FX5-65EC
Extension module	A generic term for FX5 extension modules, FX3 extension modules, extension modules (extension cable type), and extension modules (extension connector type)
Extension module (extension cable type)	A generic term for input modules (extension cable type), output modules (extension cable type), I/O modules (extension cable type), powered input/output modules, high-speed pulse input/output modules, extension power supply modules (extension cable type), connector conversion modules (extension cable type), intelligent function modules, safety extension modules, and bus conversion modules (extension cable type)
Extension module (extension connector type)	A generic term for input modules (extension connector type), output modules (extension connector type), I/O modules (extension connector type), extension power supply modules (extension connector type), connector conversion modules (extension connector type), and bus conversion modules (extension connector type)
Extension power supply module	A generic term for FX5 extension power supply modules and FX3 extension power supply modules
FX3	A generic term for the FX3G, FX3GE, FX3GC, FX3U, and FX3UC programmable controllers
FX3 extension module	A generic term for FX3 extension power supply modules and FX3 intelligent function modules
FX3 extension power supply module	A generic term for FX3U-1PSU-5V
FX3 intelligent function module	A generic term for the FX3U-4AD, FX3U-4DA, FX3U-4LC, FX3U-1PG, FX3U-2HC, FX3U-16CCL-M, FX3U-64CCL, FX3U-128ASL-M, FX3U-32DP
FX5	A generic term for FX5S, FX5UJ, FX5U, and FX5UC programmable controllers
FX5 CPU module	A generic term for FX5S CPU modules, FX5UJ CPU modules, FX5U CPU modules, and FX5UC CPU modules
FX5 extension module	A generic term for I/O modules, FX5 extension power supply modules, FX5 intelligent function modules, and FX5 safety extension modules
FX5 extension power supply module	A generic term for FX5 extension power supply modules (extension cable type) and FX5 extension power supply modules (extension connector type)
FX5 extension power supply module (extension cable type)	A generic term for FX5-1PSU-5V

Generic term/abbreviation	Description
FX5 extension power supply module (extension connector type)	A generic term for FX5-C1PS-5V
FX5 intelligent function module	A generic term for FX5-4AD, FX5-4DA, FX5-8AD, FX5-4LC, FX5-20PG-P, FX5-20PG-D, FX5-40SSC-G, FX5-80SSC-G, FX5-40SSC-S, FX5-80SSC-S, FX5-ENET, FX5-ENET/IP, FX5-CCLGN-MS, FX5-CCLIEF, FX5-CCL-MS, FX5-ASL-M, and FX5-DP-M
FX5 safety extension module	A generic term for safety main modules and safety expansion modules
FX5S CPU module	A generic term for FX5S-30MR/ES, FX5S-30MT/ES, FX5S-30MT/ESS, FX5S-40MR/ES, FX5S-40MT/ES, FX5S-40MT/ESS, FX5S-60MR/ES, FX5S-60MT/ES, FX5S-60MT/ESS, FX5S-80MR/ES[*1], FX5S-80MT/ES[*1], FX5S-80MT/ESS[*1], FX5S-30MR/DS, FX5S-30MT/DS, FX5S-30MT/DSS, FX5S-40MR/DS, FX5S-40MT/DS, FX5S-40MT/DSS, FX5S-60MR/DS, FX5S-60MT/DS, FX5S-60MT/DSS, FX5S-80MR/DS[*1], FX5S-80MT/DS[*1], and FX5S-80MT/DSS[*1]
FX5U CPU module	A generic term for FX5U-32MR/ES, FX5U-32MT/ES, FX5U-32MT/ESS, FX5U-64MR/ES, FX5U-64MT/ES, FX5U-64MT/ESS, FX5U-80MR/ES, FX5U-80MT/ES, FX5U-80MT/ESS, FX5U-32MR/DS, FX5U-32MT/DS, FX5U-32MT/DSS, FX5U-64MR/DS, FX5U-64MT/DS, FX5U-64MT/DSS, FX5U-80MR/DS, FX5U-80MT/DS, and FX5U-80MT/DSS
FX5UC CPU module	A generic term for FX5UC-32MT/D, FX5UC-32MT/DSS, FX5UC-64MT/D, FX5UC-64MT/DSS, FX5UC-96MT/D, FX5UC-96MT/DSS, FX5UC-32MT/DS-TS, FX5UC-32MT/DSS-TS, and FX5UC-32MR/DS-TS
FX5UJ CPU module	A generic term for FX5UJ-24MR/ES, FX5UJ-24MT/ES, FX5UJ-24MT/ESS, FX5UJ-40MR/ES, FX5UJ-40MT/ES, FX5UJ-40MT/ESS, FX5UJ-60MR/ES, FX5UJ-60MT/ES, FX5UJ-60MT/ESS, FX5UJ-24MR/DS, FX5UJ-24MT/DS, FX5UJ-24MT/DSS, FX5UJ-40MR/DS, FX5UJ-40MT/DS, FX5UJ-40MT/DSS, FX5UJ-60MR/DS, FX5UJ-60MT/DS, and FX5UJ-60MT/DSS
GOT	A generic term for Mitsubishi Electric Graphic Operation Terminal GOT1000 and GOT2000 series
GX Works3	The product name of the software package, SWnDND-GXW3, for the MELSEC programmable controllers (The 'n' represents a version.)
High-speed pulse input/output module	A generic term for FX5-16ET/ES-H and FX5-16ET/ESS-H
I/O module	A generic term for input modules, output modules, I/O modules, powered input/output modules, and high-speed pulse input/output modules
Input module	A generic term for input modules (extension cable type) and input modules (extension connector type)
Input module (extension cable type)	A generic term for FX5-8EX/ES and FX5-16EX/ES
Input module (extension connector type)	A generic term for FX5-C16EX/D, FX5-C16EX/DS, FX5-C32EX/D, FX5-C32EX/DS, and FX5-C32EX/DS-TS
Input/output module	A generic term for input/output modules (extension cable type) and input/output modules (extension connector type)
Input/output module (extension cable type)	A generic term for FX5-16ER/ES, FX5-16ET/ES, and FX5-16ET/ESS
Input/output module (extension connector type)	A generic term for FX5-C32ET/D, FX5-C32ET/DSS, FX5-C32ET/DS-TS, and FX5-C32ET/DSS-TS
Intelligent function module	A generic term for FX5 intelligent function modules and FX3 intelligent function modules
Intelligent module	An abbreviation for intelligent function modules
Output module	A generic term for output modules (extension cable type) and output modules (extension connector type)
Output module (extension cable type)	A generic term for FX5-8EYR/ES, FX5-8EYT/ES, FX5-8EYT/ESS, FX5-16EYR/ES, FX5-16EYT/ES, and FX5-16EYT/ESS
Output module (extension connector type)	A generic term for FX5-C16EYT/D, FX5-C16EYT/DSS, FX5-C16EYR/D-TS, FX5-C32EYT/D, FX5-C32EYT/DSS, FX5-C32EYT/D-TS, and FX5-C32EYT/DSS-TS
Peripheral device	A generic term for engineering tools and GOTs
Powered input/output module	A generic term for FX5-32ER/ES, FX5-32ET/ES, FX5-32ET/ESS, FX5-32ER/DS, FX5-32ET/DS, and FX5-32ET/DSS
Safety expansion module	A generic term for expansion modules to be connected to a safety main module
Safety input expansion module	A generic term for FX5-SF-8DI4
Safety main module	A generic term for FX5-SF-MU4T5
SD memory card	A generic term for NZ1MEM-2GBSD, NZ1MEM-4GBSD, NZ1MEM-8GBSD, NZ1MEM-16GBSD, L1MEM-2GBSD and L1MEM-4GBSD memory cards
Special communication adapter	A generic term for FX3U-232ADP, FX3U-232ADP-MB, FX3U-485ADP, FX3U-485ADP-MB, and FX3UENET-ADP

*1 Area-specific model

1 OUTLINE

1.1 Outline of the MELSEC iQ-F Series

Designed on the concepts of outstanding performance, superior drive control and user centric programming, Mitsubishi Electric MELSEC-F Series has been reborn as the MELSEC iQ-F Series.
From stand alone use to networked system applications, MELSEC iQ-F Series brings your business to the next level of industry.

Outstanding performance

CPU performance

The sequence execution engine, the core of the MELSEC iQ-F, is equipped with a newly developed execution engine that supports the structured programs, multiple programs execution, the ST language, FBs, and other features.

High-speed system bus communication

The MELSEC iQ-F realizes high-speed CPU and high-speed system bus communication. This enables maximum performance even when using an intelligent function module with large amounts of data.

Security

MELSEC iQ-F has advanced security functions (file password, remote password, security key) to prevent data theft and illegal operations by unauthorized persons.

Superior drive control

Built-in positioning

The MELSEC iQ-F features positioning functionality with CPU module built-in pulse output*1 and up to eight axes of high-speed pulse input/output modules*2. Positioning operations including interrupt, variable speed, and simple interpolation*2 can easily be set up in tables and executed.

*1 FX5UJ CPU module: Up to 3 axes
FX5S/FX5U/FX5UC CPU module: Up to 4 axes
*2 Only FX5U/FX5UC CPU module is supported.

Simple Motion module

By connecting the Simple Motion module equipped with positioning function compatible with SSCNETⅢ/H, and combining linear interpolation, 2-axis circular interpolation, and continuous trajectory control in the program set by table method, a smooth trajectory can be easily drawn.
By starting with parameter settings and the PLC program, the Simple Motion modules can realize a variety of motion control including positioning control, advanced synchronous control, cam control and speed-torque control.

Predefined protocol support for positioning

Only by simply setting the system configuration, the MELSEC iQ-F*1 and IAI ROBO Cylinder can be connected by MODBUS RTU connection to perform the positioning operation without the need to consider the transmission and reception of the communication commands.

*1 Only FX5U/FX5UC CPU module is supported.

Improved programming environment

User-friendly programming software (GX Works3)

■System design with a convenient parts library

With GX Works3, designing a system is as easy as preparing the module configuration diagram by dragging and dropping selected parts.

■Auto-generation of module parameters

When preparing the module configuration diagram, simply double-click the module to automatically generate the module parameters. A window with an easy-to-use parameter settings screen opens, enabling module parameters to be modified as needed.

■Main programming languages supported

The main IEC languages are supported by GX Works3. Various different programming languages can be used within the same project simultaneously, and the labels and devices used in each program can be shared.

1.2 Substitute Models

The recommended substitute models (MELSEC iQ-F series) introduced in this manual are substitute models, with the number of input/output points, program capacity, product and input/output terminal type (such as a terminal block/connector).
According to usage and service condition, other substitute models different from those described may be suitable. Also, the recommended substitute models may no longer be appropriate due to factors such as the release of new products to the market and function improvements.
Please plan replacement to a substitute model with the following procedures.

Procedure to replace to substitute model

1. Investigation of the existing system

List the installed places, number of units, and the type of PLCs. Investigate the programs and wiring diagram, or others.

2. Diagnosis of the facilities

Conduct a diagnosis of the facility's importance, duration of service, and usage environment. Then, set priorities and plan the replacement procedure accordingly.

3. Selection of the models

Select a replacement model based on the functions such as the number of I/O points and the availability of extension modules. Select from the latest MELSEC iQ-F series.

4. Reuse of the program

Consider either to reuse the program of the existing system, or create new program.
When reusing, convert and correct the read out program to the new PLC's format.

5. Replacement of the models

Arrange the selected models and replace on-site.

6. Debug of the system

Test the system after replacement and adjust bugs and timing.

7. Completion

After debugging, migrate to live operation.

Selection and replacement of the models

The CPU modules and extension modules of the MELSEC FX3 series can be replaced by selecting models from the MELSEC iQ-F series as the successor models that match the system.
Select models according to the following selection table.

Selection table

The following table lists the performance specifications of the MELSEC iQ-F series.
For performance specifications, functions and external dimensions not described in the following table, refer to the relevant part in this manual or the user's manual of each module.
○: Supported, ×: Not supported

Item	Required functions	MELSEC FX3 series					MELSEC iQ-F series			
		FX3G	FX3GC	FX3GE	FX3U	FX3UC	FX5S	FX5UJ	FX5U	FX5UC
Power supply	AC power supply	○	×	○	○	×	○	○	○	×
	DC power supply	○	○	○	○	○	○	○	○	○
Main unit output type	Relay	○	×	○	○	○	○	○	○	○
	Transistor	○	○	○	○	○	○	○	○	○
Program memory capacity*1	48000 steps or less	○	○	○	○	○	○	○	○	○
	More than 48000 steps	×	×	×	○	○	×	×	○	○
Number of input/output points (Including remote I/O)*2	256 points or less	○	○	○	○	○	○	○	○	○
	More than 256 points	×	×	×	○	○	×	×	○	○
Clock function*3*4	—	○	○	○	○	○	○	○	○	○
Extension module*5	8 modules or less	○	○	○	○	○	×	○	○	○
	More than 8 modules	×	×	×	○	○	×	×	○	○
Serial communication channel*6	2 channels or less	○	○	○	○	○	○	○	○	○
	More than 2 channels	×	×	×	○	○	×	×	○	○
Analog expansion adapter*7	2 modules or less	○	○	○	○	○	×	○	○	○
	More than 2 modules	×	×	×	○	○	○	×	○	○
File registers (R devices)*8	With the battery keep not in use	○	○	○	○	○	○	○	○	○
	With the battery keep in use	○	○	○	○	○	×	×	○	○

*1 Convert the project in GX Works3, and then check the number of program steps.
*2 FX5S/FX5UJ: Using CC-Link IE Field Basic remote I/O enables a system configuration with 256 or more inputs and outputs.
📖 CC-Link IE Field Network Basic Reference Manual
*3 FX5S/FX5UJ: The clock data is maintained (for 15 days) with the internal, large-capacity capacitor of the CPU module. If the voltage of the large-capacity capacitor drops, the clock data will not be maintained correctly.
FX5U/FX5UC: The clock data is maintained (for 10 days) with the internal, large-capacity capacitor of the CPU module. When the optional battery is in use, operation is continued with the battery.
*4 The FX5S, FX5UJ, FX5U, and FX5UC support a time setting function (an SNTP client). Check whether this function can be substituted.
📖 MELSEC iQ-F FX5 User's Manual (Communication)
*5 Extension modules cannot be connected to the FX5S.
*6 FX5S/FX5UJ: These products have a built-in Ethernet port and USB port. Check whether the required serial communication function can be replaced with the built-in Ethernet or USB interface of the FX5S/FX5UJ.
*7 FX5UJ: The intelligent function module for analog control can be used. If the number of analog expansion adapters is insufficient, check whether the situation can be handled with an FX5 intelligent function module.
*8 FX5S/FX5UJ: These products support an extension file register function. Check whether this function can be substituted.
📖 MELSEC iQ-F FX5 User's Manual (Application)

2 REPLACEMENT FROM FX3G TO FX5S

2.1 Outline

The FX5S is equipped with a built-in USB (Mini-B) connector and built-in Ethernet port as standard.
This module condenses high basic performance features, such as positioning and IoT functions, into a compact size. This allows users to configure systems in a simpler and easier manner.
The procedures and points for replacing an existing model with the FX5S are shown below. Use this information to consider replacing existing models.

Points to consider

- In the "Recommended substitute models" column, MELSEC iQ-F series models that can be used independently as an alternative to FX3G are listed. However, depending on working conditions and system configuration (connection status of the extension modules), or when the number of I/O points actually used is small, there are cases where other models are more suitable as replacements.
- As recommended substitute models for devices such as extension modules and expansion boards, devices that can be connected to the FX5S CPU module are listed.
- Although "Special notes" describes the points users must be aware of to replace each model, it does not include specifications differences between recommended substitute models and current models (such as the dimensions of substitute model being smaller than the current model). Therefore, when replacing the model, check specifications of each model (such as the dimensions and power specifications) in the manual as well as "Special notes".
- For a model where it's been determined that no substitute models exist based on the above principle, the phrase "No recommended substitute models" is used. However, depending on applications and system configurations, it may still be possible to replace such a model with an FX5S system configuration. Identify which functions and features are necessary, and consider replacing the model with the FX5S system configuration.

2.2 Replacement Procedure

The procedure for replacing the FX3G with the FX5S is shown below.

1. Selection of the models

Select the substitute models.

☞ Page 19 Selection of Substitute Models

2. Conversion of the program

Convert the program used in the FX3G so that it can be used in the FX5S.

☞ Page 25 Conversion of the Projects

3. Replacement with the substitute models

Replace the PLCs.

☞ Page 34 Replacement of the PLC

2.3 Selection of Substitute Models

Recommended substitute models

CPU modules (FX3G → FX5S)

The recommended substitute models of the FX5S corresponding to the FX3G are shown below.

Please consider replacing the currently used CPU modules with the following recommended substitute models.

Current model	Recommended substitute model	Special notes
FX3G-14MR/ES	FX5S-30MR/ES	The number of I/O points increases in the recommended substitute models.
FX3G-14MT/ES	FX5S-30MT/ES	The number of I/O points increases in the recommended substitute models.
FX3G-14MT/ESS	FX5S-30MT/ESS	The number of I/O points increases in the recommended substitute models.
FX3G-24MR/ES	FX5S-30MR/ES	The number of I/O points increases in the recommended substitute models.
FX3G-24MT/ES	FX5S-30MT/ES	The number of I/O points increases in the recommended substitute models.
FX3G-24MT/ESS	FX5S-30MT/ESS	The number of I/O points increases in the recommended substitute models.
FX3G-40MR/ES	FX5S-40MR/ES	—
FX3G-40MT/ES	FX5S-40MT/ES	—
FX3G-40MT/ESS	FX5S-40MT/ESS	—
FX3G-60MR/ES	FX5S-60MR/ES	—
FX3G-60MT/ES	FX5S-60MT/ES	—
FX3G-60MT/ESS	FX5S-60MT/ESS	—
FX3G-14MR/DS	FX5S-30MR/DS	The number of I/O points increases in the recommended substitute models.
FX3G-14MT/DS	FX5S-30MT/DS	The number of I/O points increases in the recommended substitute models.
FX3G-14MT/DSS	FX5S-30MT/DSS	The number of I/O points increases in the recommended substitute models.
FX3G-24MR/DS	FX5S-30MR/DS	The number of I/O points increases in the recommended substitute models.
FX3G-24MT/DS	FX5S-30MT/DS	The number of I/O points increases in the recommended substitute models.
FX3G-24MT/DSS	FX5S-30MT/DSS	The number of I/O points increases in the recommended substitute models.
FX3G-40MR/DS	FX5S-40MR/DS	—
FX3G-40MT/DS	FX5S-40MT/DS	—
FX3G-40MT/DSS	FX5S-40MT/DSS	—
FX3G-60MR/DS	FX5S-60MR/DS	—
FX3G-60MT/DS	FX5S-60MT/DS	—
FX3G-60MT/DSS	FX5S-60MT/DSS	—

Extension devices (FX3G → FX5S)

The following list shows the extension devices that also need to be replaced when replacing the CPU module from FX3G to FX5S.

If there are not any substitute models with the same function as the existing model, check the "Special notes" and consider re-configuring the system.

■Extension I/O

Extension modules cannot be connected to the FX5S. If an extension module is needed, select the FX5UJ.

■Extension device

Extension modules cannot be connected to the FX5S. If an extension module is needed, select the FX5UJ.

Current model	Recommended substitute model	Special notes
FX3U-1PSU-5V	No recommended substitute models	—
FX2N-4AD-TC	FX5-4AD-TC-ADP	The wiring must be replaced from the screw terminal block to the European terminal block.
FX2N-4AD-PT	FX5-4AD-PT-ADP	The wiring must be replaced from the screw terminal block to the European terminal block.
FX2N-5A	FX5-4AD-ADP+FX5-4DA-ADP	The wiring must be replaced from the screw terminal block to the European terminal block.
FX2N-2AD	FX5-4AD-ADP	The wiring must be replaced from the screw terminal block to the European terminal block.
FX2N-4AD	FX5-4AD-ADP	The wiring must be replaced from the screw terminal block to the European terminal block.
FX2N-8AD	No recommended substitute models	—
FX3U-4AD	FX5-4AD-ADP	The wiring must be replaced from the screw terminal block to the European terminal block.
FX2N-2LC	No recommended substitute models	—
FX3U-4LC	No recommended substitute models	—
FX2N-2DA	FX5-4DA-ADP	The wiring must be replaced from the screw terminal block to the European terminal block.
FX2N-4DA	FX5-4DA-ADP	The wiring must be replaced from the screw terminal block to the European terminal block.
FX3U-4DA	FX5-4DA-ADP	The wiring must be replaced from the screw terminal block to the European terminal block.
FX2N-32CCL	No recommended substitute models	—
FX2N-64CL-M	No recommended substitute models	—
FX3U-CAN	No recommended substitute models	—
FX3U-J1939	No recommended substitute models	—
FX3U-16CCL-M	No recommended substitute models	—
FX3U-64CCL	No recommended substitute models	—
FX3U-128ASL-M	No recommended substitute models	—
FX3U-32DP	No recommended substitute models	—

■Expansion board

Current model	Recommended substitute model	Special notes
FX3G-4EX-BD	No recommended substitute models	—
FX3G-2EYT-BD	No recommended substitute models	—
FX3G-2AD-BD	No recommended substitute models	—
FX3G-1DA-BD	No recommended substitute models	—
FX3G-232-BD	FX5-232-BD	—
FX3G-485-BD	FX5-485-BD	—
FX3G-485-BD-RJ	FX5-485-BD	The wiring must be replaced from the RJ45 connector to the European terminal block.
FX3G-422-BD	FX5-422-BD-GOT	—
FX3G-CNV-ADP	—	The FX5S CPU module does not need the expansion board.
FX3G-8AV-BD	No recommended substitute models	—

■Expansion adapter

Current model	Recommended substitute model	Special notes
FX3U-232ADP	FX5-232ADP	—
FX3U-232ADP-MB	FX5-232ADP	—
FX3U-485ADP	FX5-485ADP	—
FX3U-485ADP-MB	FX5-485ADP	—
FX3U-ENET-ADP	No recommended substitute models	An Ethernet port is built into the FX5S CPU module.
FX3U-3A-ADP	FX5-4A-ADP	—
FX3U-4AD-ADP	FX5-4AD-ADP	—
FX3U-4DA-ADP	FX5-4DA-ADP	—
FX3U-4AD-PT-ADP	FX5-4AD-PT-ADP	—
FX3U-4AD-PTW-ADP	FX5-4AD-PT-ADP	—
FX3U-4AD-PNK-ADP	No recommended substitute models	—
FX3U-4AD-TC-ADP	FX5-4AD-TC-ADP	—

■Option

Current model	Recommended substitute model	Special notes
FX3G-EEPROM-32L	No recommended substitute models	An SD memory card can be used instead. If an SD memory card is used, the FX5-SDCD is required.
FX3G-5DM	No recommended substitute models	Consider using the Web server function of the FX5S CPU module instead.
FX-30P	No recommended substitute models	—
FX0N-30EC	No recommended substitute models	These are not necessary because extension modules cannot be connected to the FX5S.
FX0N-65EC	No recommended substitute models	
FX2N-CNV-BC	No recommended substitute models	

Battery

The FX5S CPU module cannot use a battery.

The programs and devices of the FX5S CPU module are maintained in the flash memory.

Note that file registers (R) of the FX5S CPU module cannot be latched. (☞ Page 154 Device Replacement List)

The FX5S CPU module supports an extension file register function. For details, refer to the following.

📖MELSEC iQ-F FX5 User's Manual (Application)

Precautions regarding the hardware

Comparison of the FX3G and FX5S and precautions for replacement

The following list shows precautions regarding the hardware. Check details in the manuals of each model when replacing existing models.

■Key hardware differences and replacement precautions regarding FX3G and FX5S

Item	Difference		Precautions
	FX3G	FX5S	
Extension of FX2N and FX3U	Extension possible	Extension not possible	—
Input hardware filter (When the digital filter is 0) • High-speed counter • Input interruption function • Pulse catch function	Approx. 10 ms X0 to X7 each has a built-in digital filter. The time can be changed to 0 to 15 ms with D8020. When this is set to 0, X0, X1, X3, and X4 are 10 μs and X2, X5, X6, and X7 are 50 μs.	■FX5S-30M□ X0, X1, X3, and X4: • ON: 5 μs or less • OFF: 5 μs or less X2, X5, X6, and X7: • ON: 30 μs or less • OFF: 50 μs or less X10 to X15: • ON: 50 μs or less • OFF: 150 μs or less ■FX5S-40M□ and FX5S-60M□ X0, X1, X3, and X4: • ON: 5 μs or less • OFF: 5 μs or less X2, X5, X6, and X7: • ON: 30 μs or less • OFF: 50 μs or less X10 to X17: • ON: 50 μs or less • OFF: 150 μs or less X20 and later: • ON: Approx. 10 ms • OFF: Approx. 10 ms	Noise that was not detected by FX3G may possibly be mistaken as an input. Take external measures against noise, or set an appropriate input response time parameter (initial value: 10ms).
Input signal current	X0 to X7: 7 mA X10 or later: 5 mA	X0 to X7: 5.1 mA X10 or later: 4 mA	The input signal current value of FX5S is lower than that of FX3G. Therefore, when replacing existing models, check the specifications of the external devices.

■External dimensions

When replacing the modules, be aware of external dimensions differences between FX3G and FX5S.

• FX3G

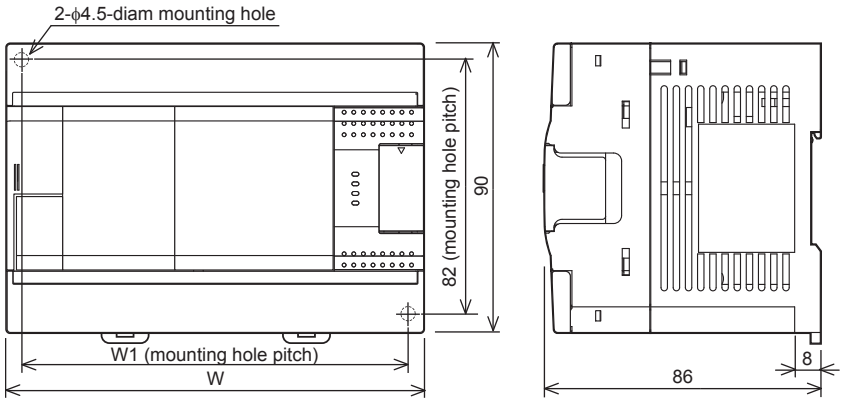

External color: Munsell 0.08GY/7.64/0.81
Top cover: Munsell N1.5
Unit: mm
The terminal block uses M3 terminal screws.
A 35-mm width DIN rail can be installed.

Model name	W (mm)	W1 (mm)	Weight: kg
FX3G-14M□	90	82	Approx. 0.50
FX3G-24M□	90	82	Approx. 0.55
FX3G-40M□	130	122	Approx. 0.70
FX3G-60M□	175	167	Approx. 0.85

• FX5S

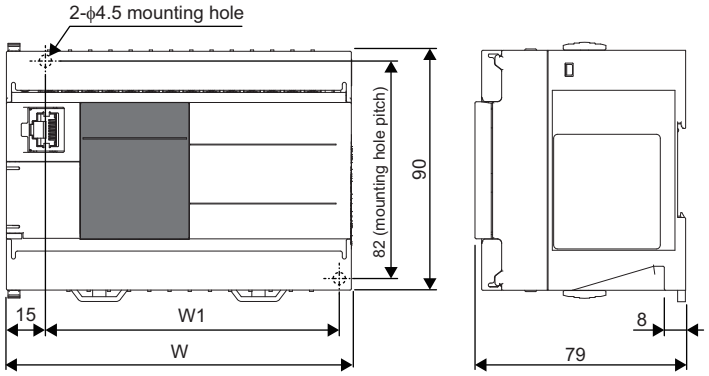

External color: Munsell 0.6B7.6/0.2
Unit: mm
The terminal block uses M3 terminal screws.
A 35-mm width DIN rail can be installed.

Model name	W (mm)	W1 (mm)	Weight: kg
FX5S-30M□	100	81	Approx. 0.45
FX5S-40M□	130	111	Approx. 0.55
FX5S-60M□	175	156	Approx. 0.65

■Cable sizes for European type terminal block

Suitable wiring and tightening torque are described below.

Model name	Wire size for one wire	Wire size for two wires	Ferrule with insulation sleeve (wire size)	Tightening torque	Stripping length of wire ends
FX3G-485-BD, FX3U-485ADP, FX3U-485ADP-MB	22 to 20 AWG	22 AWG	22 to 20 AWG	0.22 to 0.25 N·m	9 mm
FX5-485-BD, FX5-485ADP					
FX5-4AD-ADP, FX5-4DA-ADP, FX5-4A-ADP, FX5-4AD-PT-ADP, FX5-4AD-TC-ADP				0.20 N·m	

■Differences and precautions regarding installation of the FX3G and FX5S

The pitch of the holes for installation in a control panel differs between the FX3G and FX5S. For direct installation in a control panel, add installation holes. Also, because the terminal block shapes differ, one terminal block cannot be replaced with the other. (☞ Page 23 External dimensions)

■Differences and precautions regarding the drive power supply of the output section of the FX3G and FX5S

• Output section power supply voltage consolidation

When replacing the FX3G with the FX5S, the power supplies must be consolidated if a separate power supply has been installed for one output common terminal of the FX3G.

• Maximum output load current

When the FX3G is replaced with the FX5S, the maximum load current of part of the output section changes.

Although one common terminal is used for each output for Y0 to Y2 of the FX3G-24M□, one common terminal is used for four outputs of Y0 to Y3 of the FX5S-30M□.

If a power supply has been installed separately for each common terminal, consolidate the power supplies.

(Example) FX3G-24MT/ES (output side)

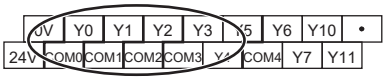

<Maximum output load current>

• Maximum load (resistance load) current of 1 output common terminal: 0.5 A or less



(Example) FX5S-30MT/ES (output side)

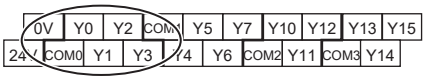

<Maximum output load current>

• Maximum load (resistance load) current of 3 output common terminal: 0.6 A or less
• Maximum load (resistance load) current of 4 output common terminal: 0.8 A or less

2.4 Conversion of the Projects

When converting FX3G projects to FX5S projects, use GX Works3.

After converting the projects, it may be necessary to adjust the programs (instructions, devices) and parameters.

Operation method for replacing projects

To convert FX3G projects to FX5S projects, perform operations in GX Works3.

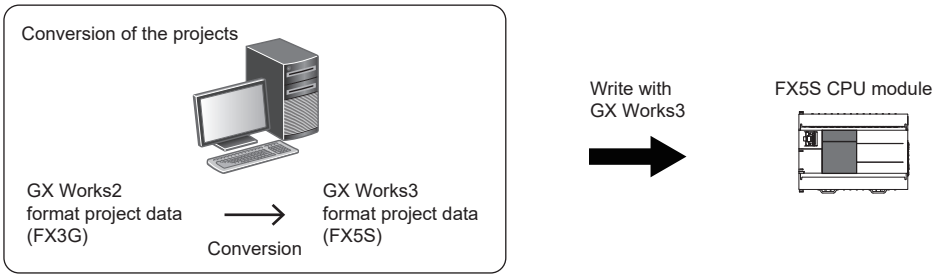

To convert the projects, install the engineering tool of the following version.

Engineering tool	Version	Remarks
GX Works3	1.080J or later	—
GX Works2	1.519R or later	Supplied with GX Works3.

Precautions

- To read projects of GX Works2 using GX Works3, convert beforehand using GX Works2, and then read the projects. Even for projects converted using GX Works2, conversion may not proceed depending on the state of the program. If there is an error in the program, reading will be canceled.
- To read projects of GX Works2 using GX Works3, delete the security (user management, data security setting) of GX Works2 beforehand and then read the projects. If the security is set to the GX Works2 project, the reading will be canceled.
- To read projects of GX Works2 using GX Works3, administrator rights are required.
- The FX5S does not support the SFC program.

Operating procedure

1. Start up GX Works3.

2. Open the FX3G project.

Select [Project] ⇨ [Open Other Format File] ⇨ [GX Works2 Format] ⇨ [Open Project] ⇨ Project (***.gxw).

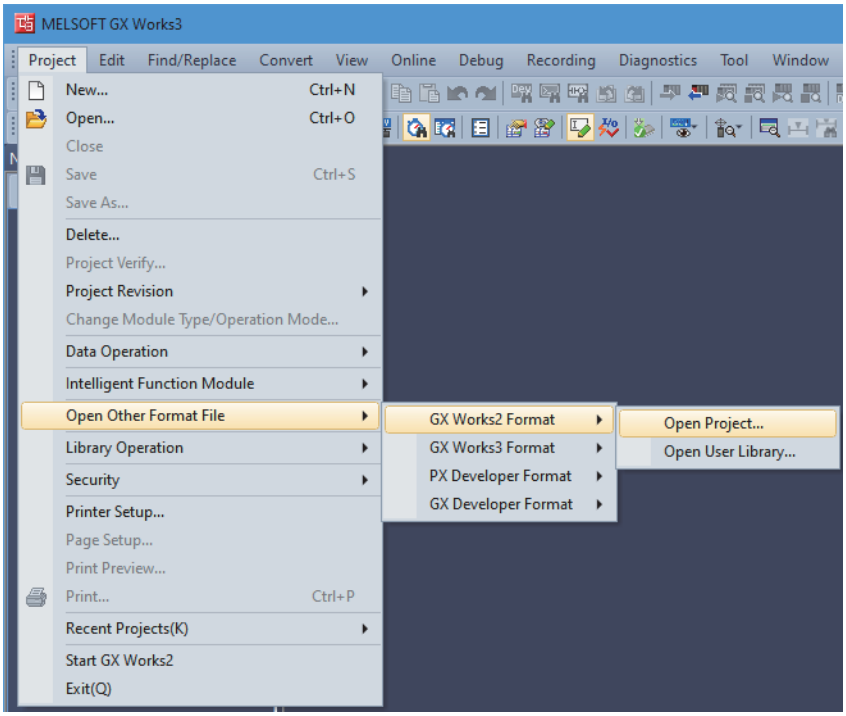

3. The following display is shown.

The following selection screen of the new module type is shown.

Select the new module type and press the [Execute] button.

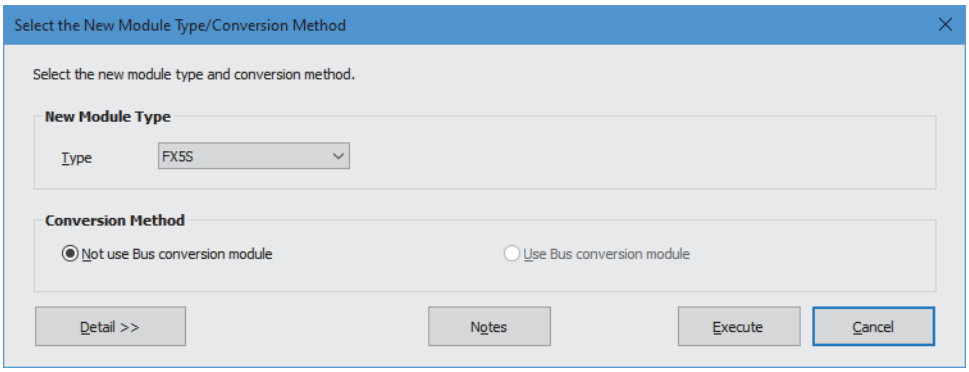

4. When conversion is completed, the following message is shown.

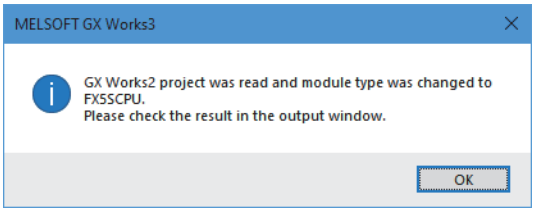

5. Check the contents of the module change result in the "Output window".

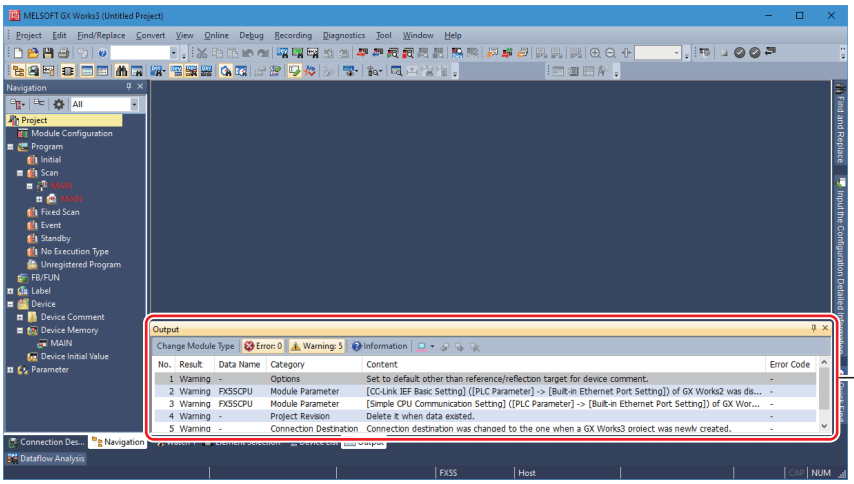

Precautions

- When projects are converted, the program instructions and devices may be changed. Check the contents of the program. Parameters other than the CC-Link network parameters[*1] will be deleted. Set the parameters if necessary.

*1 For the network parameters of CC-Link, refer to ☞ Page 28 Precautions when replacing the parameters.

6. Set the model name of the CPU for the system parameter.

[System Parameter] ⇨ [I/O Assignment Setting] ⇨ Model Name

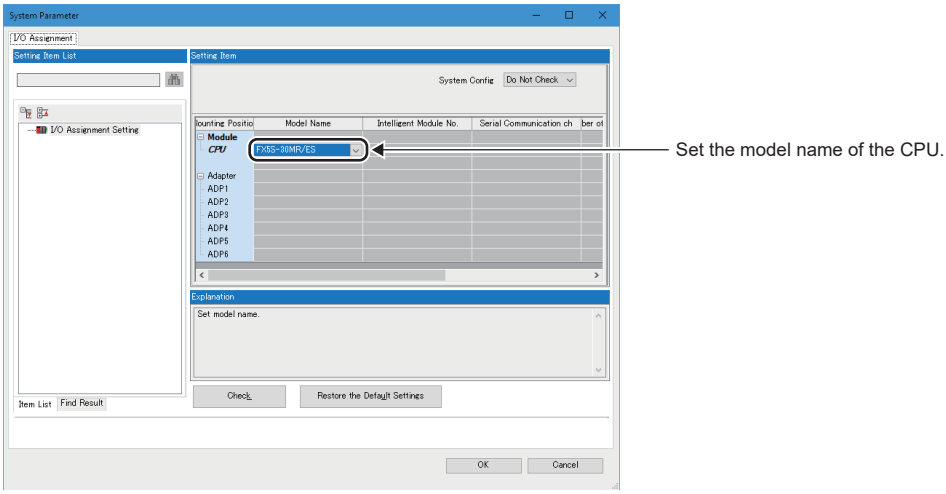

7. Perform conversion.

[Convert] ⇨ [Rebuild All]

Precautions when converting the projects

- When converting FX3G projects using GX Works3, be aware that the program (instructions and devices) may be changed.
- When converting projects, the number of steps may increase and writing to the FX5S may fail. Check the number of steps after conversion.
- Characters used for the label name in GX Works2 may correspond to reserved words or illegal characters in GX Works3. In that case, change the label name.

For precautions regarding the instruction and device replacement, refer to ☞ Page 140 Instruction Replacement List.

Precautions when replacing the parameters

When converting FX3G projects to FX5S projects, the setting data of the parameters (PC parameters and network parameters) and special modules (intelligent function modules) will be deleted. Therefore, it is necessary to set the data with GX Works3 again.

Also, GX Works3 does not support the following parameters of the FX3G, so it is necessary to set these parameters with GX Works3 again.

- Network parameters (CC-Link)
- Intelligent function module parameter (AnyWireASLINK)

Precautions when replacing other functions

Precautions when using the high-speed counters

When the high-speed counters (C235 to C255) are used with the FX3G, they will not operate just by switching to the FX5S. It is necessary to set the FX3 Series compatible high-speed counters by the parameter and change the program. For the setting procedure, refer to the following.

■Parameter Setting Procedure of the FX3 Series Compatible High-speed Counters

1. Select "Long Counter Specification" for the specification method for high-speed counter.

[Parameter] ⇨ [FX5SCPU] ⇨ [Module Parameter] ⇨ [High Speed I/O] ⇨ "Input Function" ⇨ "High Speed Counter" ⇨ "Detailed Setting" ⇨ "Other"

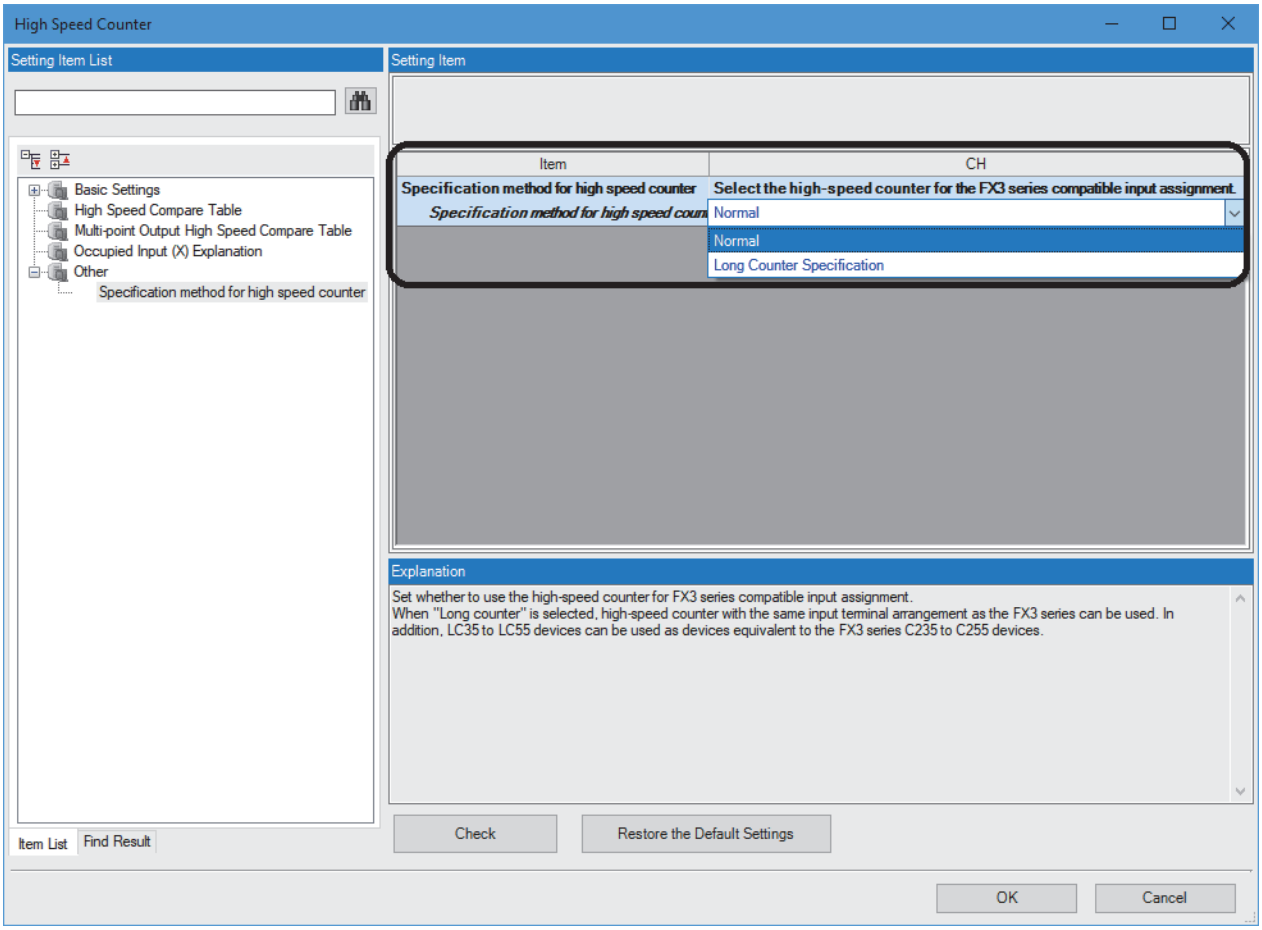

2. Set the function of the high-speed counters used with the FX3G.

Set the counter device of the FX3 series compatible, the input comparison enable/disable of preset input, and the control switch of preset input.

Item	CH1	CH2	CH3
Use/Do Not Use Counter	**Set whether to use counter or not.**		
Use/Not Use	Use	Not Use	Not Use
Counter device	**Select the high-speed counter for the FX3 series compatible input assignment.**		
Counter device	LC35 (Operation equivalent to C235)	LC36 (Operation equivalent to C236)	LC37 (Operation equivalent to C237)
Operation Mode	**Set operation mode.**		
Operation Mode	Normal Mode	Normal Mode	Normal Mode
Pulse Input Mode	**Set pulse input mode.**		
Pulse Input Mode	1-Phase 1 Input (S/W Up/Down Switch)	1-Phase 1 Input (S/W Up/Down Switch)	1-Phase 1 Input (S/W Up/Down Switch)
Preset Input	**Set preset input.**		
Preset Input Enable/Disable	Disable	Disable	Disable
Input logic	Positive Logic	Positive Logic	Positive Logic
Preset Value	0	0	0
Input Comparison Enable/Disable	Enable	Enable	Enable
Control Switch	Rising	Rising	Rising
Enable Input	**Set enable input.**		
Enable Input Enable/Disable	Disable	Disable	Disable
Input logic	Positive Logic	Positive Logic	Positive Logic
Ring Length Setting	**Set ring length.**		
Ring Length Enable/Disable	Disable	Disable	Disable
Ring Length	2147483648	2147483648	2147483648
Measurement Unit Time	**Set the measurement unit time (ms) for the pulse density measurement mode and rotation speed measurement mode.**		
Measurement Unit Time	1000 ms	1000 ms	1000 ms
Number of Pulses per Rotation	**Set the number of pulses per rotation when using the rotation speed measurement mode.**		
Number of Pulses per Rotation	1000 pulse	1000 pulse	1000 pulse

■Changing the program

Change the high-speed counter program by referring to the following program example.

[Example of program]

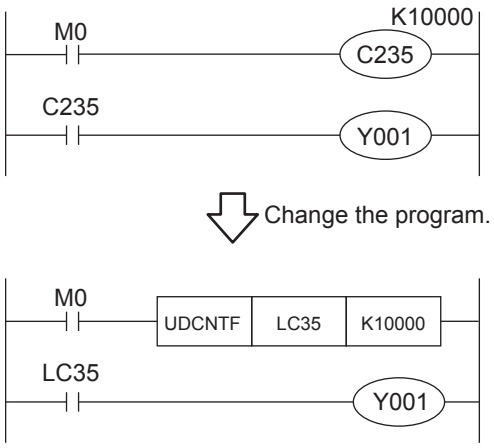

Precautions when using the routine timer

When the routine timer (T192 to T199) is used with the FX3G, it will not operate just by switching to the FX5S.

The routine timer must be set by the parameter. For the setting procedure, refer to the following.

■Parameter setting procedure of the poutine timer

Set the use of the routine timer and the start device number.

[Parameter] ⇨ [FX5SCPU] ⇨ [CPU Parameter] ⇨ "Memory/Device Setting" ⇨ "Device/Label Memory Area Setting"

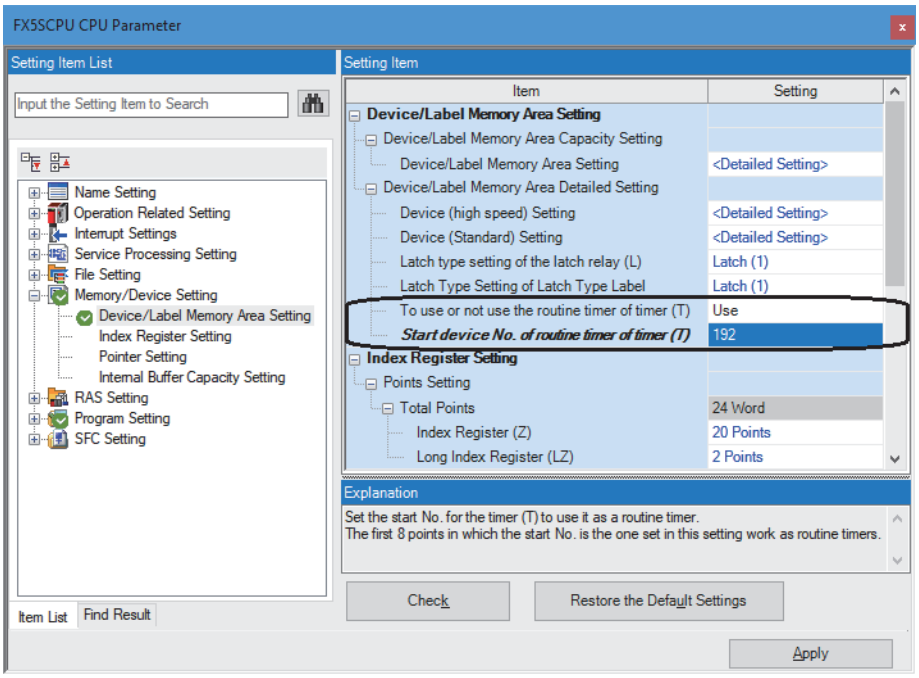

Serial communication channel assignment (RS-485, RS-232C)

When the FX3G is replaced with the FX5S, the assignment of communication channels that can be used changes.
Change the communication channels specified in instructions and parameter settings according to the specifications.

■FX3G communication channel assignment

• FX3G-14M□ and FX3G-24M□

A serial port with one channel can be connected using a communication function expansion board and a special communication adapter.

The configurable combinations are shown below.

[Configuration example 1]

Using a special communication adapter

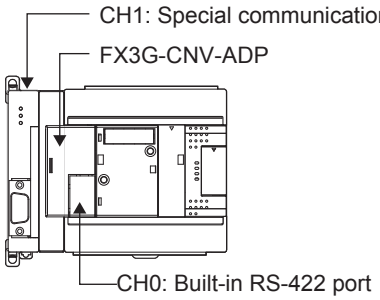

[Configuration example 2]

Using a communication function expansion board

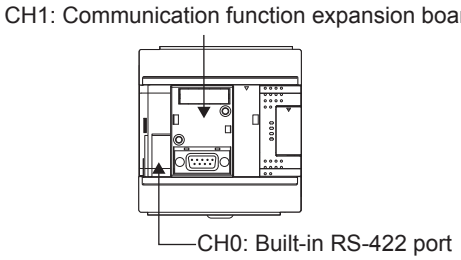

• FX3G-40M□ and FX3G-60M□

A serial port with up to two channels can be connected using a communication function expansion board and a special communication adapter.

The configurable combinations are shown below.

[Configuration example 1]

Using a communication function expansion board and a special communication adapter at the same time

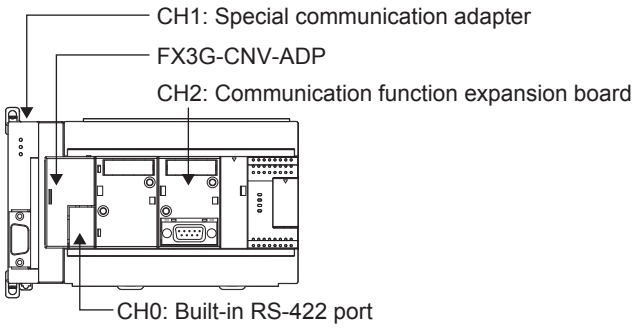

[Configuration example 2]

Using two special communication adapters

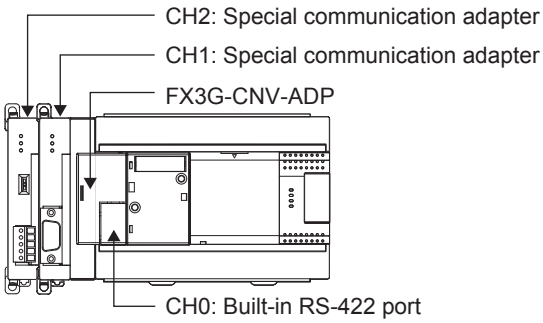

■FX5S communication channel assignment

A serial port with up to two channels can be connected using a communication board and a communication adapter.

The communication channel assignments are fixed regardless of the system configuration.

The configurable combinations are shown below.

[Configuration example 1]

Using a communication board and a communication adapter at the same time

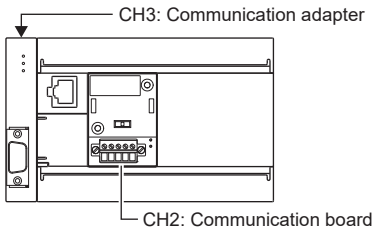

[Configuration example 2]

Using two communication adapters

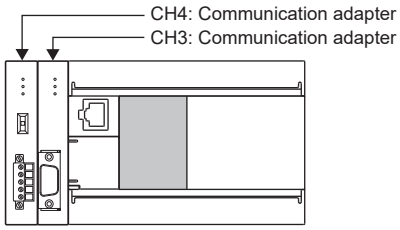

Ex.

When two special communication adapters connected to the FX3G are replaced with two FX5S communication adapters, the communication channels change from CH1 and CH2 to CH3 and CH4.

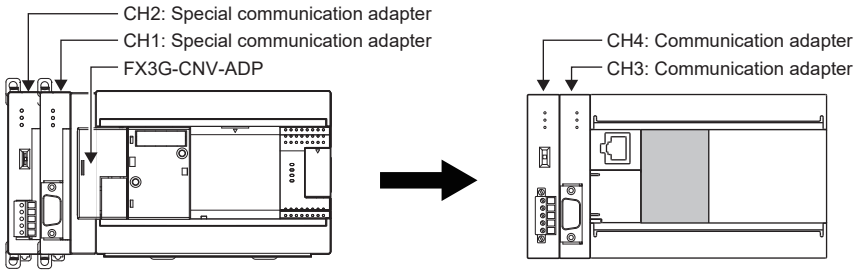

2.5 Replacement of the PLC

The main points to consider during replacement of the CPU module and extension modules are explained below.
For details of each item, check the reference pages in this document, and related manuals such as the PLC Hardware Manual and Programming Manual.

Device classification	Item	Operation content and points of attention	Reference page
CPU module	Reuse of the input/output wiring	Rewire the connection part of the terminal block type.	☞ Page 19 Selection of Substitute Models
Other extension modules	Wiring to each module		
Verifying operation of the equipment	Operation and test of the PLC program	Operate the converted PLC program and hardware devices, and check and adjust the device function and operation timing. Be aware of the precautions described on the reference page for replacing the project, and check that the devices operate as they are designed.	☞ Page 25 Conversion of the Projects

2.6 Specifications Comparison

The following table lists the specifications comparison between the FX3G and FX5S.

Item		FX3G			FX5S
Operation control system		Stored program repetitive operation system			Stored program repetitive operation system
Input/output control system		Refresh system			Refresh system
Programming language		Ladder diagram (LD) Structured text (ST) Function block diagram/ladder diagram (FBD/LD) Sequential function chart (SFC)			Ladder diagram (LD) Structured text (ST) Function block diagram/ladder diagram (FBD/LD) Sequential function chart (SFC)*1
Program memory	Max. memory capacity/ type	32000 steps Max. allowable write: 20000 times			48000 steps Max. allowable write: 20000 times
	Writing function during running	Provided			Provided
	Security function	Keyword/customer keyword function			Block password function/file password function
Real-time clock	Clock function	Year, month, day, hour, minute, second, day of week (automatic leap year adjustment) Differences per month ±45 sec./25℃			Year, month, day, hour, minute, second, day of week (automatic leap year adjustment) Differences per month ±45 sec./25℃
Processing speed	Basic instructions	LD X0: 210ns (standard mode) MOV D0 D1: 520ns (standard mode)			LD X0: 84ns MOV D0 D1: 100ns
Number of input/ output points	(1) Extension-combined number of input points	128 points or less	128 points or less (Total number of points for (1) and (2))	256 points or less (Total number of points for (1) to (3))	80 points or less
	(2) Extension-combined number of output points	128 points or less			
	(3) Number of remote I/O points	128 points or less (the total number of remote I/O points in CC-Link and AnyWireASLINK)			
Input relay		128 points (X)			80 points (X)
Output relay		128 points (Y)			80 points (Y)
Auxiliary relay		7680 points (M)			32768 points (M)*2
State		4096 points (S)			4096 points (S) (fixed)
Timer (on-delay timer)	Timer	310 points (T)			1024 points (T)*2*3
	Retentive timer	10 points (T)			1024 points (ST)*2*3
Variable analog potentiometers		VR1: D8030 VR2: D8031 (The two built-in analog volumes can be used as analog timers.)			—
Counter	For 16 bits	200 points (C)			1024 points (C)*2
	For 32 bits	35 points (C)			1024 points (LC)*2

Item		FX3G	FX5S
High-speed counter	1-phase 1-count input in both directions (32 bits up/down)	C235	LC35
		C236	LC36
		C237	LC37
		C238	LC38
		C239	LC39
		C240	LC40
		C241	LC41
		C242	LC42
		C243	LC43
		C244	LC44
		C245	LC45
	1-phase 2-count input (32 bits up/down)	C246	LC46
		C247	LC47
		C248	LC48
		C249	LC49
		C250	LC50
	2-phase 2-count input (32 bits up/down)	C251	LC51
		C252	LC52
		C253	LC53
		C254	LC54
		C255	LC55
Data register		8000 points (D)	8000 points (D)*2
Index register	For 16 bits	16 points (V, Z)	24 points (Z)*4
	For 32 bits	—	12 points (LZ)*4
Extension register		24000 points (R)	32768 points (R)*2
Extension file register		24000 points (ER)	32768 points (ER) (stored in SD memory card)
Pointer		2048 points (P)	4096 points (P)
Interrupt pointer		9 points (I)	32 points (I)

*1 For the compatible versions, refer to the following.
MELSEC iQ-F FX5 User's Manual (Application)

*2 The number of points can be changed with parameters within the capacity range of the CPU built-in memory.

*3 This item indicates the total number of count of the 10ms timer, 100ms timer, and 1ms timer.

*4 The sum of index register (Z) and long index register (LZ) is 24 words.

3 REPLACEMENT FROM FX3GE TO FX5S

3.1 Outline

The FX5S is equipped with a built-in USB (Mini-B) connector and built-in Ethernet port as standard.
This module condenses high basic performance features, such as positioning and IoT functions, into a compact size. This allows users to configure systems in a simpler and easier manner.
The procedures and points for replacing an existing model with the FX5S are shown below. Use this information to consider replacing existing models.

Points to Consider

- In the "Recommended substitute models" column, MELSEC iQ-F series models that can be used independently as an alternative to FX3GE are listed. However, depending on working conditions and system configuration (connection status of the extension modules), or when the number of I/O points actually used is small, there are cases where other models are more suitable as replacements.
- As recommended substitute models for devices such as extension modules and expansion boards, devices that can be connected to the FX5S CPU module are listed.
- Although "Special notes" describes the points users must be aware of to replace each model, it does not include specifications differences between recommended substitute models and current models (such as the dimensions of substitute model being smaller than the current model). Therefore, when replacing the model, check specifications of each model (such as the dimensions and power specifications) in the manual as well as "Special notes".
- For a model where it's been determined that no substitute models exist based on the above principle, the phrase "No recommended substitute models" is used. However, depending on applications and system configurations, it may still be possible to replace such a model with an FX5S system configuration. Identify which functions and features are necessary, and consider replacing the model with the FX5S system configuration.

3.2 Replacement procedure

The procedure for replacing the FX3GE with the FX5S is shown below.

1. Selection of the models

Select the substitute models.

☞ Page 37 Selection of Substitute Models

2. Conversion of the program

Convert the program used in the FX3GE so that it can be used in the FX5S.

3. Replacement with the substitute models

Replace the PLCs.

☞ Page 42 Replacement of the PLC

3.3 Selection of Substitute Models

Recommended substitute models

CPU modules (FX3GE → FX5S)

The recommended substitute models of the FX5S corresponding to the FX3GE are shown below.

Please consider replacing the currently used CPU modules with the following recommended substitute models.

Current model	Recommended substitute model	Special notes
FX3GE-24MR/ES	FX5S-30MR/ES+FX5-4A-ADP	The number of I/O points increases in the recommended substitute models.
FX3GE-24MT/ES	FX5S-30MT/ES+FX5-4A-ADP	The number of I/O points increases in the recommended substitute models.
FX3GE-24MT/ESS	FX5S-30MT/ESS+FX5-4A-ADP	The number of I/O points increases in the recommended substitute models.
FX3GE-40MR/ES	FX5S-40MR/ES+FX5-4A-ADP	—
FX3GE-40MT/ES	FX5S-40MT/ES+FX5-4A-ADP	—
FX3GE-40MT/ESS	FX5S-40MT/ESS+FX5-4A-ADP	—
FX3GE-24MR/DS	FX5S-30MR/DS+FX5-4A-ADP	The number of I/O points increases in the recommended substitute models.
FX3GE-24MT/DS	FX5S-30MT/DS+FX5-4A-ADP	The number of I/O points increases in the recommended substitute models.
FX3GE-24MT/DSS	FX5S-30MT/DSS+FX5-4A-ADP	The number of I/O points increases in the recommended substitute models.
FX3GE-40MR/DS	FX5S-40MR/DS+FX5-4A-ADP	—
FX3GE-40MT/DS	FX5S-40MT/DS+FX5-4A-ADP	—
FX3GE-40MT/DSS	FX5S-40MT/DSS+FX5-4A-ADP	—

Extension devices (FX3GE → FX5S)

The following list shows the extension devices that also need to be replaced when replacing the CPU module from FX3GE to FX5S.

If there are not any substitute models with the same function as the existing model, check the "Special notes" and consider re-configuring the system.

■Extension I/O

Extension modules cannot be connected to the FX5S. If an extension module is needed, select the FX5UJ.

■Extension device

Extension modules cannot be connected to the FX5S. If an extension module is needed, select the FX5UJ.

Current model	Recommended substitute model	Special notes
FX3U-1PSU-5V	No recommended substitute models	—
FX2N-4AD-TC	FX5-4AD-TC-ADP	The wiring must be replaced from the screw terminal block to the European terminal block.
FX2N-4AD-PT	FX5-4AD-PT-ADP	The wiring must be replaced from the screw terminal block to the European terminal block.
FX2N-5A	FX5-4AD-ADP+FX5-4DA-ADP	The wiring must be replaced from the screw terminal block to the European terminal block.
FX2N-2AD	FX5-4AD-ADP	The wiring must be replaced from the screw terminal block to the European terminal block.
FX2N-4AD	FX5-4AD-ADP	The wiring must be replaced from the screw terminal block to the European terminal block.
FX2N-8AD	No recommended substitute models	—
FX3U-4AD	FX5-4AD-ADP	The wiring must be replaced from the screw terminal block to the European terminal block.
FX2N-2LC	No recommended substitute models	—
FX3U-4LC	No recommended substitute models	—
FX2N-2DA	FX5-4DA-ADP	The wiring must be replaced from the screw terminal block to the European terminal block.
FX2N-4DA	FX5-4DA-ADP	The wiring must be replaced from the screw terminal block to the European terminal block.
FX3U-4DA	FX5-4DA-ADP	The wiring must be replaced from the screw terminal block to the European terminal block.
FX2N-32CCL	No recommended substitute models	—
FX2N-64CL-M	No recommended substitute models	—
FX3U-CAN	No recommended substitute models	—
FX3U-J1939	No recommended substitute models	—
FX3U-16CCL-M	No recommended substitute models	—
FX3U-64CCL	No recommended substitute models	—
FX3U-128ASL-M	No recommended substitute models	—
FX3U-32DP	No recommended substitute models	—

■Expansion board

Current model	Recommended substitute model	Special notes
FX3G-4EX-BD	No recommended substitute models	—
FX3G-2EYT-BD	No recommended substitute models	—
FX3G-2AD-BD	No recommended substitute models	—
FX3G-1DA-BD	No recommended substitute models	—
FX3G-232-BD	FX5-232-BD	—
FX3G-485-BD	FX5-485-BD	—
FX3G-485-BD-RJ	FX5-485-BD	The wiring must be replaced from the RJ45 connector to the European terminal block.
FX3G-422-BD	FX5-422-BD-GOT	—
FX3G-CNV-ADP	—	The FX5S CPU module does not need the expansion board.
FX3G-8AV-BD	No recommended substitute models	—

■Expansion adapter

Current model	Recommended substitute model	Special notes
FX3U-232ADP	FX5-232ADP	—
FX3U-232ADP-MB	FX5-232ADP	—
FX3U-485ADP	FX5-485ADP	—
FX3U-485ADP-MB	FX5-485ADP	—
FX3U-3A-ADP	FX5-4A-ADP	—
FX3U-4AD-ADP	FX5-4AD-ADP	—
FX3U-4DA-ADP	FX5-4DA-ADP	—
FX3U-4AD-PT-ADP	FX5-4AD-PT-ADP	—
FX3U-4AD-PTW-ADP	FX5-4AD-PT-ADP	—
FX3U-4AD-PNK-ADP	No recommended substitute models	—
FX3U-4AD-TC-ADP	FX5-4AD-TC-ADP	—

■Option

Current model	Recommended substitute model	Special notes
FX3G-EEPROM-32L	No recommended substitute models	An SD memory card can be used instead. If an SD memory card is used, the FX5-SDCD is required.
FX3G-5DM	No recommended substitute models	Consider using the Web server function of the FX5S CPU module instead.
FX-30P	No recommended substitute models	—
FX0N-30EC	No recommended substitute models	These are not necessary because extension modules cannot be connected to the FX5S.
FX0N-65EC	No recommended substitute models	These are not necessary because extension modules cannot be connected to the FX5S.
FX2N-CNV-BC	No recommended substitute models	These are not necessary because extension modules cannot be connected to the FX5S.

Battery

The FX5S CPU module cannot use a battery.

The programs and devices of the FX5S CPU module are maintained in the flash memory.

Note that file registers (R) of the FX5S CPU module cannot be latched. (☞ Page 154 Device Replacement List)

The FX5S CPU module supports an extension file register function. For details, refer to the following.

📖MELSEC iQ-F FX5 User's Manual (Application)

Precautions regarding the hardware

Comparison of the FX3GE and FX5S and precautions for replacement

The following list shows precautions regarding the hardware. Check details in the manuals of each model when replacing existing models.

■Key hardware differences and replacement precautions regarding FX3GE and FX5S

Item	Difference		Precautions
	FX3GE	FX5S	
Extension of FX2N and FX3U	Extension possible	Extension not possible	—
Input hardware filter (When the digital filter is 0) • High-speed counter • Input interruption function • Pulse catch function	Approx. 10 ms X0 to X7 each has a built-in digital filter. The time can be changed to 0 to 15 ms with D8020. When this is set to 0, X0, X1, X3, and X4 are 10 μs and X2, X5, X6, and X7 are 50 μs.	■FX5S-30M□ X0, X1, X3, and X4: • ON: 5 μs or less • OFF: 5 μs or less X2, X5, X6, and X7: • ON: 30 μs or less • OFF: 50 μs or less X10 to X15: • ON: 50 μs or less • OFF: 150 μs or less ■FX5S-40M□ and FX5S-60M□ X0, X1, X3, and X4: • ON: 5 μs or less • OFF: 5 μs or less X2, X5, X6, and X7: • ON: 30 μs or less • OFF: 50 μs or less X10 to X17: • ON: 50 μs or less • OFF: 150 μs or less X20 and later: • ON: Approx. 10 ms • OFF: Approx. 10 ms	Noise that was not detected by the FX3G may possibly be mistaken as an input. Take external measures against noise, or set an appropriate input response time parameter (initial value: 10ms).
Input signal current	X0 to X7: 7 mA X10 or later: 5 mA	X0 to X7: 5.1 mA X10 or later: 4 mA	The input signal current value of FX5S is lower than that of FX3G. Therefore, when replacing existing models, check the specifications of the external devices.

■External dimensions

When replacing the modules, be aware of external dimensions differences between FX3GE and FX5S.

• FX3GE

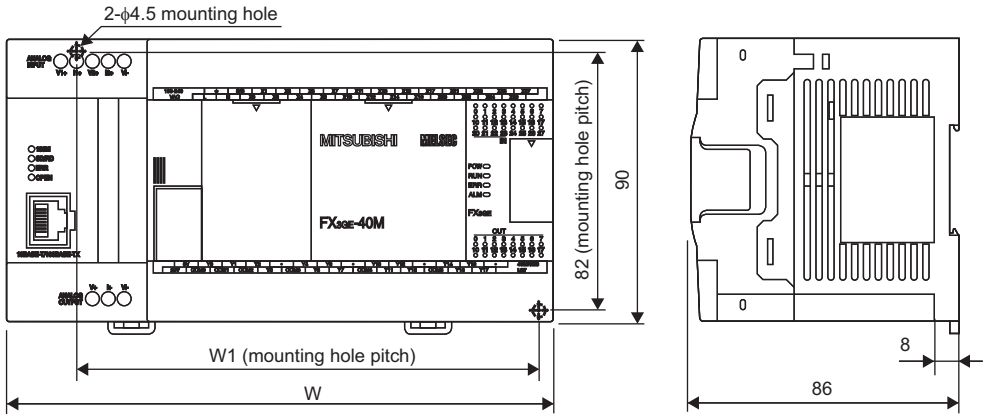

External color: Munsell 0.08GY/7.64/0.81
Top cover: Munsell N1.5
Unit: mm
The terminal block uses M3 terminal screws.
A 35-mm width DIN rail can be installed.

Model name	W (mm)	W1 (mm)	Weight: kg
FX3GE-24M□	130	105	Approx. 0.60
FX3GE-40M□	175	150	Approx. 0.80

• FX5S

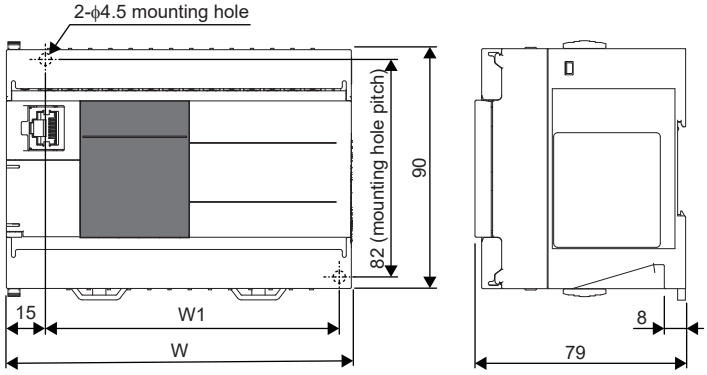

External color: Munsell 0.6B7.6/0.2
Unit: mm
The terminal block uses M3 terminal screws.
A 35-mm width DIN rail can be installed.

Model name	W (mm)	W1 (mm)	Weight: kg
FX5S-30M□	100	81	Approx. 0.45
FX5S-40M□	130	111	Approx. 0.55
FX5S-60M□	175	156	Approx. 0.65

■Cable sizes for European type terminal block

Suitable wiring and tightening torque are described below.

Model name	Wire size for one wire	Wire size for two wires	Ferrule with insulation sleeve (wire size)	Tightening torque	Stripping length of wire ends
FX3G-485-BD, FX3U-485ADP, FX3U-485ADP-MB	22 to 20 AWG	22 AWG	22 to 20 AWG	0.22 to 0.25 N·m	9 mm
FX5-485-BD, FX5-485ADP					
FX5-4AD-ADP, FX5-4DA-ADP, FX5-4A-ADP, FX5-4AD-PT-ADP, FX5-4AD-TC-ADP				0.20 N·m	

■Differences and precautions regarding installation of the FX3GE and FX5S

The pitch of the holes for installation in a control panel differs between the FX3GE and FX5S. For direct installation in a control panel, add installation holes. Also, because the terminal block shapes differ, one terminal block cannot be replaced with the other. (☞ Page 41 External dimensions)

■Differences and precautions regarding the drive power supply of the output section of the FX3GE and FX5S

• Output section power supply voltage consolidation

When replacing the FX3GE with the FX5S, the power supplies must be consolidated if a separate power supply has been installed for one output common terminal of the FX3GE.

• Maximum output load current

When the FX3GE is replaced with the FX5S, the maximum load current of part of the output section changes.

Although one common terminal is used for each output for Y0 to Y2 of the FX3GE-24M□, one common terminal is used for four outputs of Y0 to Y3 of the FX5S-30M□.

If a power supply has been installed separately for each common terminal, consolidate the power supplies.

(Example) FX3GE-24MT/ES (output side)

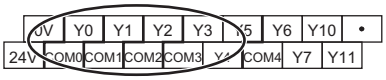

<Maximum output load current>

• Maximum load (resistance load) current of 1 output common terminal: 0.5 A or less



(Example) FX5S-30MT/ES (output side)

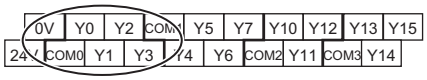

<Maximum output load current>

• Maximum load (resistance load) current of 3 output common terminal: 0.6 A or less
• Maximum load (resistance load) current of 4 output common terminal: 0.8 A or less

3.4 Replacement of the PLC

The main points to consider during replacement of the CPU module and extension modules are explained below.

For details of each item, check the reference pages in this document, and related manuals such as the PLC Hardware Manual and Programming Manual.

Device classification	Item	Operation content and points of attention	Reference page
CPU module	Reuse of the input/output wiring	Rewire the connection part of the terminal block type.	☞ Page 37 Selection of Substitute Models
Other extension modules	Wiring to each module		
Verifying operation of the equipment	Operation and test of the PLC program	Operate the converted PLC program and hardware devices, and check and adjust the device function and operation timing. Be aware of the precautions described on the reference page for replacing the project, and check that the devices operate as they are designed.	—

4 REPLACEMENT FROM FX3G TO FX5UJ

4.1 Outline

The FX5UJ is equipped with features such as communication and high-speed input/output, and can easily be expanded with expansion boards and expansion adapters. Up to eight I/O modules and FX5 intelligent function modules (combined) can be connected.

The procedures and points for replacing an existing model with the FX5UJ are shown below. Use this information to consider replacing existing models.

Points to consider

- In the "Recommended substitute models" column, MELSEC iQ-F series models that can be used independently as an alternative to FX3G are listed. However, depending on working conditions and system configuration (connection status of the extension modules), or when the number of I/O points actually used is small, there are cases where other models are more suitable as replacements.
- As recommended substitute models for devices such as extension modules and expansion boards, devices that can be connected to the FX5UJ CPU module are listed.
- Although "Special notes" describes the points users must be aware of to replace each model, it does not include specifications differences between recommended substitute models and current models (such as the dimensions of substitute model being smaller than the current model). Therefore, when replacing the model, check specifications of each model (such as the dimensions and power specifications) in the manual as well as "Special notes".
- For a model where it's been determined that no substitute models exist based on the above principle, the phrase "No recommended substitute models" is used. However, depending on applications and system configurations, it may still be possible to replace such a model with an FX5UJ system configuration. Identify which functions and features are necessary, and consider replacing the model with the FX5UJ system configuration.

4.2 Replacement Procedure

The procedure for replacing the FX3G with the FX5UJ is shown below.

1. Selection of the models

Select the substitute models.

☞ Page 44 Selection of Substitute Models

2. Conversion of the program

Convert the program used in the FX3G so that it can be used in the FX5UJ.

☞ Page 51 Conversion of the Projects

3. Replacement with the substitute models

Replace the PLCs.

☞ Page 59 Replacement of the PLC

4.3 Selection of Substitute Models

Recommended substitute models

CPU modules (FX3G → FX5UJ)

The recommended substitute models of the FX5UJ corresponding to the FX3G are shown below.

Please consider replacing the currently used CPU modules with the following recommended substitute models.

Current model	Recommended substitute model	Special notes
FX3G-14MR/ES	FX5UJ-24MR/ES	The number of I/O points increases in the recommended substitute models.
FX3G-14MT/ES	FX5UJ-24MT/ES	The number of I/O points increases in the recommended substitute models.
FX3G-14MT/ESS	FX5UJ-24MT/ESS	The number of I/O points increases in the recommended substitute models.
FX3G-24MR/ES	FX5UJ-24MR/ES	—
FX3G-24MT/ES	FX5UJ-24MT/ES	—
FX3G-24MT/ESS	FX5UJ-24MT/ESS	—
FX3G-40MR/ES	FX5UJ-40MR/ES	—
FX3G-40MT/ES	FX5UJ-40MT/ES	—
FX3G-40MT/ESS	FX5UJ-40MT/ESS	—
FX3G-60MR/ES	FX5UJ-60MR/ES	—
FX3G-60MT/ES	FX5UJ-60MT/ES	—
FX3G-60MT/ESS	FX5UJ-60MT/ESS	—
FX3G-14MR/DS	FX5UJ-24MR/DS	The number of I/O points increases in the recommended substitute models.
FX3G-14MT/DS	FX5UJ-24MT/DS	The number of I/O points increases in the recommended substitute models.
FX3G-14MT/DSS	FX5UJ-24MT/DSS	The number of I/O points increases in the recommended substitute models.
FX3G-24MR/DS	FX5UJ-24MR/DS	—
FX3G-24MT/DS	FX5UJ-24MT/DS	—
FX3G-24MT/DSS	FX5UJ-24MT/DSS	—
FX3G-40MR/DS	FX5UJ-40MR/DS	—
FX3G-40MT/DS	FX5UJ-40MT/DS	—
FX3G-40MT/DSS	FX5UJ-40MT/DSS	—
FX3G-60MR/DS	FX5UJ-60MR/DS	—
FX3G-60MT/DS	FX5UJ-60MT/DS	—
FX3G-60MT/DSS	FX5UJ-60MT/DSS	—

Extension devices (FX3G → FX5UJ)

The following list shows the extension devices that also need to be replaced when replacing the CPU module from FX3G to FX5UJ.

If there are not any substitute models with the same function as the existing model, check the "Special notes" and consider re-configuring the system.

■Extension I/O

Current model	Recommended substitute model	Special notes
FX2N-8ER	FX5-16ER/ES	The number of I/O points increases in the recommended substitute models.
FX2N-8ER-ES/UL	FX5-16ER/ES	The number of I/O points increases in the recommended substitute models.
FX2N-8EX	FX5-8EX/ES	—
FX2N-8EX-ES/UL	FX5-8EX/ES	—
FX2N-8EX-UA1/UL	No recommended substitute models	—
FX2N-16EX	FX5-16EX/ES	—
FX2N-16EX-ES/UL	FX5-16EX/ES	—
FX2N-16EX-C	FX5-CNV-IF+FX5-C16EX/D	Only a connector type module can be connected after (on the right side of) FX5-CNV-IF.
FX2N-16EXL-C	No recommended substitute models	—
FX2N-8EYR	FX5-8EYR/ES	—
FX2N-8EYR-ES/UL	FX5-8EYR/ES	—
FX2N-8EYR-S-ES/UL	No recommended substitute models	—
FX2N-8EYT	FX5-8EYT/ES	—
FX2N-8EYT-ESS/UL	FX5-8EYT/ESS	—
FX2N-8EYT-H	No recommended substitute models	—
FX2N-16EYR	FX5-16EYR/ES	—
FX2N-16EYR-ES/UL	FX5-16EYR/ES	—
FX2N-16EYT	FX5-16EYT/ES	—
FX2N-16EYT-ESS/UL	FX5-16EYT/ESS	—
FX2N-16EYT-C	FX5-CNV-IF+FX5-C16EYT/D	Only a connector type module can be connected after (on the right side of) FX5-CNV-IF.
FX2N-16EYS	No recommended substitute models	—
FX2N-32ER	FX5-32ER/ES	—
FX2N-32ER-ES/UL	FX5-32ER/ES	—
FX2N-32ET	FX5-32ET/ES	—
FX2N-32ET-ESS/UL	FX5-32ET/ESS	—
FX2N-32ES	No recommended substitute models	—
FX2N-48ER	FX5-32ER/ES+FX5-16ER/ES	—
FX2N-48ER-ES/UL	FX5-32ER/ES+FX5-16ER/ES	—
FX2N-48ET	FX5-32ET/ES+FX5-16ET/ES	—
FX2N-48ET-ESS/UL	FX5-32ET/ESS+FX5-16ET/ESS	—
FX2N-48ER-D	FX5-32ER/DS+FX5-16ER/ES	—
FX2N-48ER-DS	FX5-32ER/DS+FX5-16ER/ES	—
FX2N-48ET-D	FX5-32ET/DS+FX5-16ET/ES	—
FX2N-48ET-DSS	FX5-32ET/DSS+FX5-16ET/ESS	—
FX2N-48ER-UA1/UL	No recommended substitute models	—

■Extension device

Current model	Recommended substitute model	Special notes
FX3U-1PSU-5V	FX5-1PSU-5V	—
FX2N-4AD-TC	FX5-4AD-TC-ADP	The wiring must be replaced from the screw terminal block to the European terminal block.
FX2N-4AD-PT	FX5-4AD-PT-ADP	The wiring must be replaced from the screw terminal block to the European terminal block.
FX2N-5A	FX5-4AD+FX5-4DA	The wiring must be replaced from the screw terminal block to the spring clamp terminal block.
FX2N-2AD	FX5-4AD	The wiring must be replaced from the screw terminal block to the spring clamp terminal block.
FX2N-4AD	FX5-4AD	The wiring must be replaced from the screw terminal block to the spring clamp terminal block.
FX2N-8AD	FX5-8AD	The wiring must be replaced from the screw terminal block to the spring clamp terminal block.
FX3U-4AD	FX5-4AD	The wiring must be replaced from the screw terminal block to the spring clamp terminal block.
FX2N-2LC	FX5-4LC	The wiring must be replaced from the screw terminal block to the spring clamp terminal block.
FX3U-4LC	FX5-4LC	The wiring must be replaced from the screw terminal block to the spring clamp terminal block.
FX2N-2DA	FX5-4DA	The wiring must be replaced from the screw terminal block to the spring clamp terminal block.
FX2N-4DA	FX5-4DA	The wiring must be replaced from the screw terminal block to the spring clamp terminal block.
FX3U-4DA	FX5-4DA	The wiring must be replaced from the screw terminal block to the spring clamp terminal block.
FX2N-32CCL	FX5-CCL-MS	Set it as an intelligent device station when using the recommended substitute model.*1
FX2N-64CL-M	No recommended substitute models	—
FX3U-CAN	No recommended substitute models	—
FX3U-J1939	No recommended substitute models	—
FX3U-16CCL-M	FX5-CCL-MS	Set it as the master station when using the recommended substitute model.*1
FX3U-64CCL	FX5-CCL-MS	Set it as an intelligent device station when using the recommended substitute model.*1
FX3U-128ASL-M	FX5-ASL-M	—
FX3U-32DP	No recommended substitute models	—

*1 FX5-CCL-MS can be used as a master station or an intelligent device station.

■Expansion board

Current model	Recommended substitute model	Special notes
FX3G-4EX-BD	No recommended substitute models	—
FX3G-2EYT-BD	No recommended substitute models	—
FX3G-2AD-BD	No recommended substitute models	—
FX3G-1DA-BD	No recommended substitute models	—
FX3G-232-BD	FX5-232-BD	—
FX3G-485-BD	FX5-485-BD	—
FX3G-485-BD-RJ	FX5-485-BD	The wiring must be replaced from the RJ45 connector to the European terminal block.
FX3G-422-BD	FX5-422-BD-GOT	—
FX3G-CNV-ADP	—	The FX5UJ CPU module does not need the expansion board.
FX3G-8AV-BD	No recommended substitute models	—

■Expansion adapter

Current model	Recommended substitute model	Special notes
FX3U-232ADP	FX5-232ADP	—
FX3U-232ADP-MB	FX5-232ADP	—
FX3U-485ADP	FX5-485ADP	—
FX3U-485ADP-MB	FX5-485ADP	—
FX3U-ENET-ADP	No recommended substitute models	Ethernet port is built into FX5UJ CPU module.
FX3U-3A-ADP	FX5-4A-ADP	—
FX3U-4AD-ADP	FX5-4AD-ADP	—
FX3U-4DA-ADP	FX5-4DA-ADP	—
FX3U-4AD-PT-ADP	FX5-4AD-PT-ADP	—
FX3U-4AD-PTW-ADP	FX5-4AD-PT-ADP	—
FX3U-4AD-PNK-ADP	No recommended substitute models	—
FX3U-4AD-TC-ADP	FX5-4AD-TC-ADP	—

■Option

Current model	Recommended substitute model	Special notes
FX3G-EEPROM-32L	No recommended substitute models	An SD memory card can be used instead.
FX3G-5DM	No recommended substitute models	Consider using the Web server function of the FX5UJ CPU module instead.
FX-30P	No recommended substitute models	—
FX0N-30EC	FX5-30EC	—
FX0N-65EC	FX5-65EC	—
FX2N-CNV-BC	FX5-CNV-BC	—

Extension devices that can still be used after replacing the CPU module with FX5UJ

The following shows the extension devices that can still be used after replacing the CPU module with the FX5UJ (FX3G → FX5UJ).

Terminal block
FX-16E-TB, FX-32E-TB, FX-16EX-A1-TB, FX-16EYR-TB, FX16EYS-TB, FX-16EYT-TB
FX-16E-TB/UL, FX-32E-TB/UL, FX-16EYR-ES-TB/UL, FX-16EYS-ES-TB/UL, FX-16EYT-ES-TB/UL, FX-16EYT-ESS-TB/UL

Battery

The FX5UJ CPU module cannot use a battery. However, the programs and devices of the FX5UJ CPU module are maintained in the flash memory.

Note that file registers (R) of the FX5UJ CPU module cannot be latched. (☞ Page 154 Device Replacement List)

Precautions regarding the hardware

Comparison of FX3G and FX5UJ and precautions for replacement

The following list shows precautions regarding the hardware. Check details in the manuals of each model when replacing existing models.

■Key hardware differences and replacement precautions regarding FX3G and FX5UJ

Item	Difference		Precautions
	FX3G	FX5UJ	
Extension of FX2N and FX3U	Extension possible	Extension not possible	—
Input hardware filter (When the digital filter is 0) • High-speed counter • Input interruption function • Pulse catch function	Approx. 10 ms X0 to X7 each has a built-in digital filter. The time can be changed to 0 to 15 ms with D8020. When this is set to 0, X0, X1, X3, and X4 are 10 μs and X2, X5, X6, and X7 are 50 μs.	■FX5UJ-24M□ X0, X1, X3, and X4: • ON: 5 μs or less • OFF: 5 μs or less X2, X5, X6, and X7: • ON: 30 μs or less • OFF: 50 μs or less X10 to X15: • ON: 50 μs or less • OFF: 150 μs or less ■FX5UJ-40M□ and FX5UJ-60M□ X0, X1, X3, and X4: • ON: 5 μs or less • OFF: 5 μs or less X2, X5, X6, and X7: • ON: 30 μs or less • OFF: 50 μs or less X10 to X17: • ON: 50 μs or less • OFF: 150 μs or less X20 and later: • ON: Approx. 10 ms • OFF: Approx. 10 ms	Noise that was not detected by FX3G may possibly be mistaken as an input. Take external measures against noise, or set an appropriate input response time parameter (initial value: 10ms).
Input signal current	X0 to X7: 7 mA X10 or later: 5 mA	X0 to X7: 5.3 mA X10 or later: 4 mA	The input signal current value of FX5UJ is lower than that of FX3G. Therefore, when replacing existing models, check the specifications of the external devices.

■External dimensions

When replacing the modules, be aware of external dimensions differences between FX3G and FX5UJ.

• FX3G

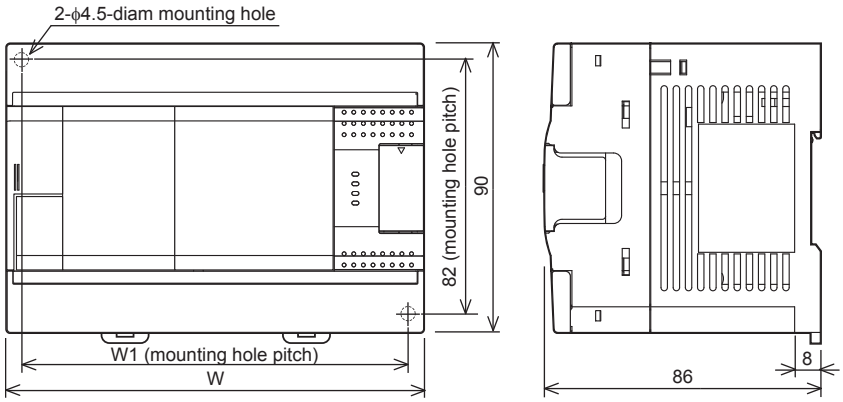

External color: Munsell 0.08GY/7.64/0.81
Top cover: Munsell N1.5
Unit: mm
The terminal block uses M3 terminal screws.
A 35-mm width DIN rail can be installed.

Model name	W: mm	W1: mm	Weight: kg
FX3G-14M□	90	82	Approx. 0.50
FX3G-24M□	90	82	Approx. 0.55
FX3G-40M□	130	122	Approx. 0.70
FX3G-60M□	175	167	Approx. 0.85

• FX5UJ

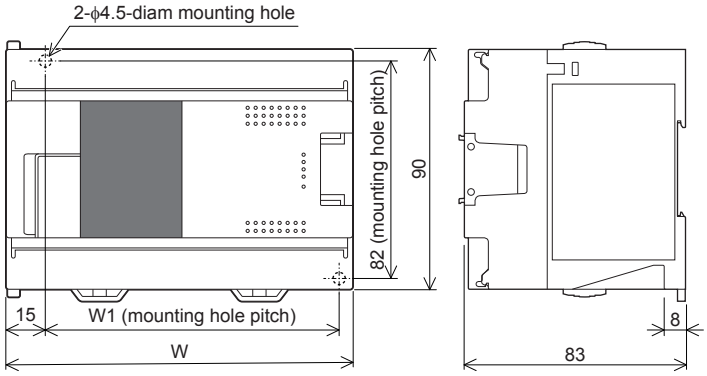

External color: Munsell 0.6B7.6/0.2
Unit: mm
The terminal block uses M3 terminal screws.
A 35-mm width DIN rail can be installed.

Model name	W: mm	W1: mm	Weight: kg
FX5UJ-24M□	95	76	Approx. 0.55
FX5UJ-40M□	130	111	Approx. 0.65
FX5UJ-60M□	175	156	Approx. 0.80

■Cable sizes for European type terminal block

Suitable wiring and tightening torque are described below.

Model name	Wire size for one wire	Wire size for two wires	Ferrule with insulation sleeve (wire size)	Tightening torque	Stripping length of wire ends
FX3G-485-BD, FX3U-485ADP, FX3U-485ADP-MB	22 to 20 AWG	22 AWG	22 to 20 AWG	0.22 to 0.25 N·m	9 mm
FX5-485-BD, FX5-485ADP					
FX5-4AD-ADP, FX5-4DA-ADP, FX5-4A-ADP, FX5-4AD-PT-ADP, FX5-4AD-TC-ADP				0.20 N·m	

■Differences and precautions regarding installation of the FX3G and FX5UJ

The pitch of the holes for installation in a control panel differs between the FX3G and FX5UJ. For direct installation in a control panel, add installation holes. Also, because the terminal block shapes differ, one terminal block cannot be replaced with the other. (☞ Page 49 External dimensions)

■Differences and precautions regarding the drive power supply of the output section of the FX3G and FX5UJ

• Output section power supply voltage consolidation

When replacing the FX3G with the FX5UJ, the power supplies must be consolidated if a separate power supply has been installed for one output common terminal of the FX3G.

• Maximum output load current

When the FX3G is replaced with the FX5UJ, the maximum load current of part of the output section changes.

Although one common terminal is used for each output for Y0 to Y2 of the FX3G-24M□, one common terminal is used for three outputs of Y0 to Y2 of the FX5UJ-24M□.

If a power supply has been installed separately for each common terminal, consolidate the power supplies.

(Example) FX3G-24MT/ES (output side)



<Maximum output load current>

• Maximum load (resistance load) current of 1 output common terminal: 0.5 A or less



(Example) FX5UJ-24MT/ES (output side)



<Maximum output load current>

• Maximum load (resistance load) current of 1 output common terminal: 0.5 A or less

• Maximum load (resistance load) current of 3 output common terminal: 0.6 A or less

• Maximum load (resistance load) current of 4 output common terminal: 0.8 A or less

4.4 Conversion of the Projects

When converting FX3G projects to FX5UJ projects, use GX Works3.

After converting the projects, it may be necessary to adjust the programs (instructions, devices) and parameters.

Operation method for replacing projects

To convert FX3G projects to FX5UJ projects, perform operations in GX Works3.

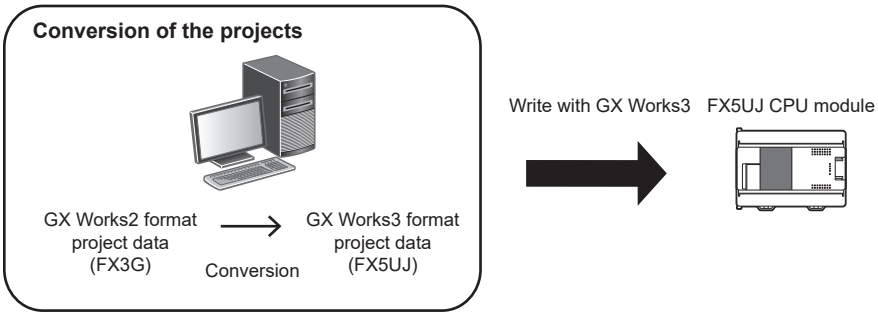

To convert the projects, install the engineering tool of the following version.

Engineering tool	Version	Remarks
GX Works3	1.065T or later*1	—
GX Works2	1.519R or later	Supplied with GX Works3.

*1 For GX Works3 version 1.063R and earlier, it is necessary to read FX5U projects beforehand and convert the projects to FX5UJ projects with model/operation mode change.

Precautions

- To read projects of GX Works2 using GX Works3, convert beforehand using GX Works2, and then read the projects. Even for projects converted using GX Works2, conversion may not proceed depending on the state of the program. If there is an error in the program, reading will be canceled.
- To read projects of GX Works2 using GX Works3, delete the security (user management, data security setting) of GX Works2 beforehand and then read the projects. If the security is set to the GX Works2 project, the reading will be canceled.
- To read projects of GX Works2 using GX Works3, administrator rights are required.
- FX5UJ does not support the SFC program.

Operating procedure

1. Start up GX Works3.

2. Open the FX3G project.

Select [Project] ⇨ [Open Other Format File] ⇨ [GX Works2 Format] ⇨ [Open Project] ⇨ Project (***.gxw).

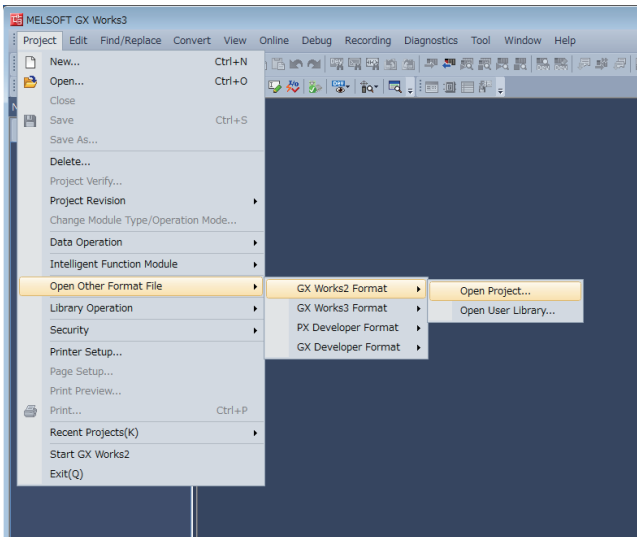

3. The following display is shown.

The following selection screen of the new module type is shown.

Select the new module type and press the [Execute] button.

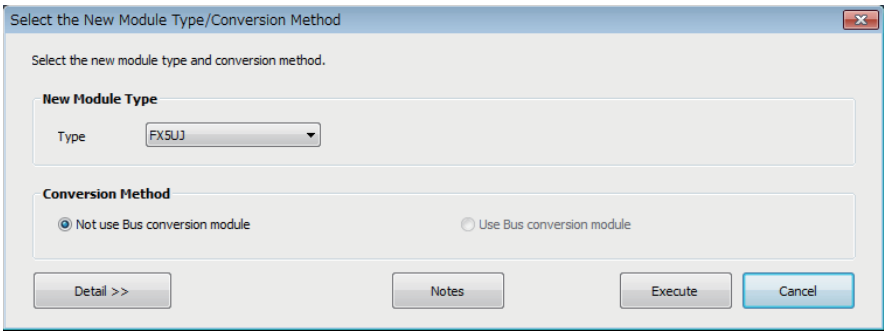

4. When conversion is completed, the following message is shown.

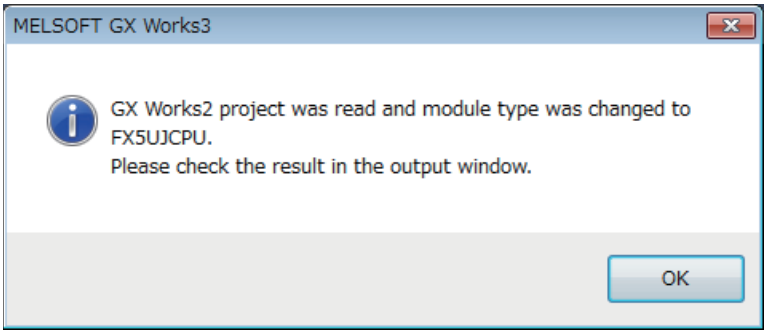

5. Check the contents of the module change result in the "Output window".

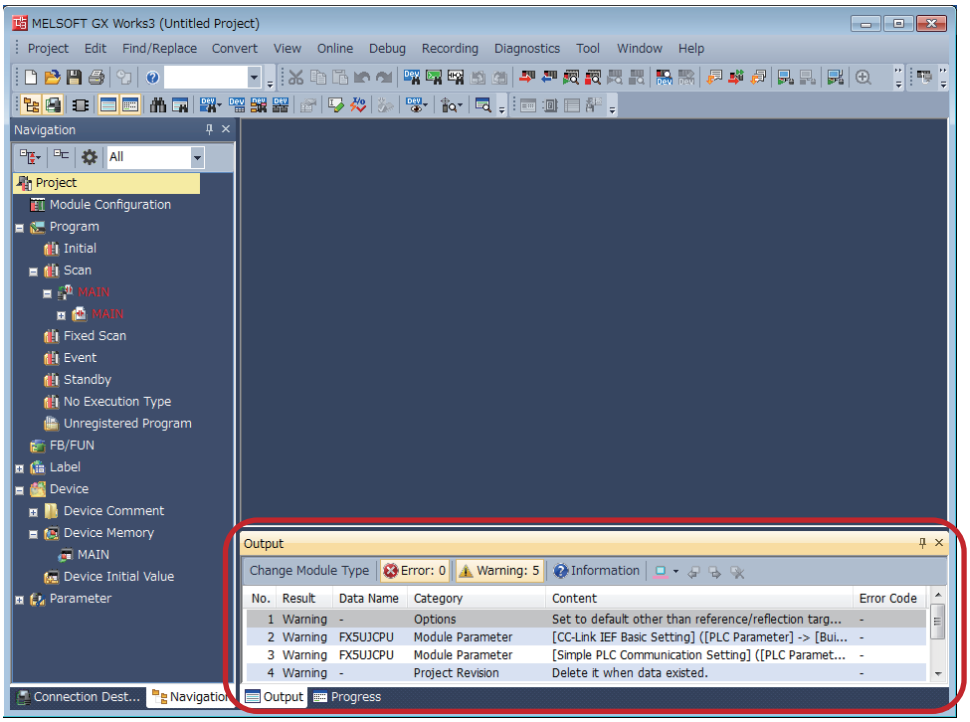

Precautions

- If the model/operation mode is converted from FX5U to FX5UJ with GX Works3 versions 1.063R or earlier, device memory entries, device initial values, and device comments that are outside the device range of the FX5UJ will be deleted.
- When projects are converted, the program instructions and devices may be changed. Check the contents of the program. Parameters other than the CC-Link network parameters*1 will be deleted. Set the parameters if necessary.

*1 For the network parameters of CC-Link, refer to ☞ Page 54 Precautions when replacing the parameters.

6. Set the model name of the CPU for the system parameter.

[System Parameter] ⇨ [I/O Assignment Setting] ⇨ Model Name

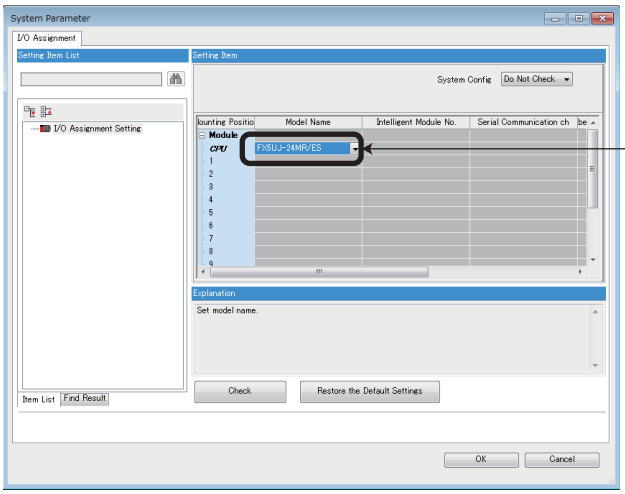

7. Perform conversion.

[Convert] ⇨ [Rebuild All]

Precautions when Converting the Projects

- When converting FX3G projects using GX Works3, be aware that the program (instructions and devices) may be changed.
- When converting projects, the number of steps may increase and writing to the FX5UJ may fail. Check the number of steps after conversion.
- Characters used for the label name in GX Works2 may correspond to reserved words or illegal characters in GX Works3. In that case, change the label name.

For precautions regarding instruction and device replacement, refer to ☞ Page 140 Instruction Replacement List.

Precautions when replacing the parameters

When converting FX3G projects to FX5UJ projects, the setting data of the parameters (PC parameters and network parameters) and special modules (intelligent function modules) will be deleted. Therefore, it is necessary to set the data with GX Works3 again.

Also, GX Works3 does not support the following parameters of the FX3G, so it is necessary to set these parameters with GX Works3 again.

- Network parameters (CC-Link)
- Intelligent function module parameter (AnyWireASLINK)

Precautions when replacing other functions

Precautions when using the high-speed counters

When the high-speed counters (C235 to C255) are used with the FX3G, they will not operate just by switching to the FX5UJ. It is necessary to set the FX3 Series compatible high-speed counters by the parameter and change the program. For the setting procedure, refer to the following.

■Parameter setting procedure of the FX3 series compatible high-speed counters

1. Select "Long Counter Specification" for the specification method for high-speed counters.

[Parameter] ⇨ [FX5UJCPU] ⇨ [Module Parameter] ⇨ [High Speed I/O] ⇨ "Input Function" ⇨ "High Speed Counter" ⇨ "Detailed Setting" ⇨ "Other"

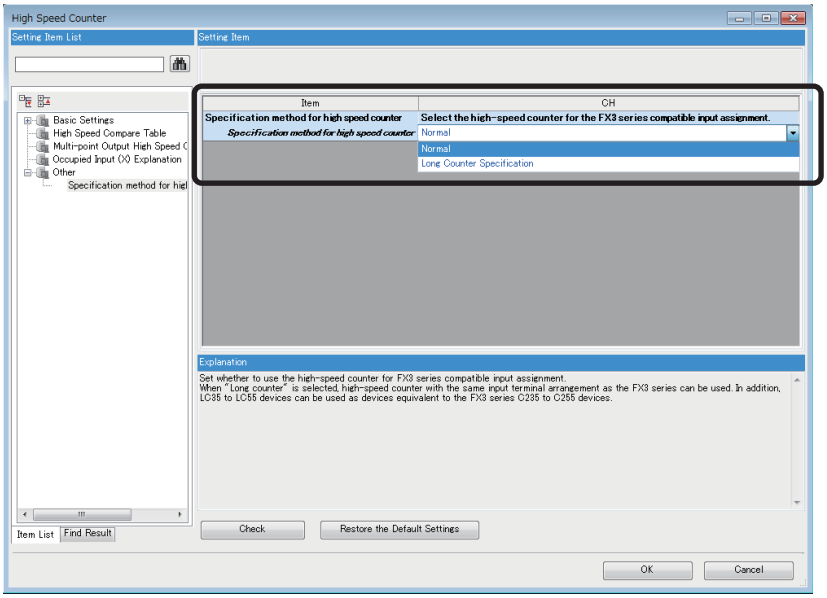

2. Set the function of the high-speed counters used with the FX3G.

Set the counter device of the FX3 series compatible, the input comparison enable/disable of preset input, and the control switch of preset input.

Item	CH1	CH2	
Use/Do Not Use Counter	**Set whether to use counter or not.**		
Use/Not Use	Enable	Disable	Disable
Counter device	**Select the high-speed counter for the FX3 series compatible input assignment.**		
Counter device	LC35 (Operation equivalent to C235)	LC36 (Operation equivalent to C236)	LC37 (Operatior
Operation Mode	**Set operation mode.**		
Operation Mode	Normal Mode	Normal Mode	Normal Mode
Pulse Input Mode	**Set pulse input mode.**		
Pulse Input Mode	1-Phase 1 Input (S/W Up/Down Switch)	1-Phase 1 Input (S/W Up/Down Switch)	1-Phase 1 Inpu
Preset Input	**Set preset input.**		
Preset Input Enable/Disable	Disable	Disable	Disable
Input logic	Positive Logic	Positive Logic	Positive Logic
Preset Value	0	0	0
Input Comparison Enable/Disable	Enable	Enable	Enable
Control Switch	Rising	Rising	Rising
Enable Input	**Set enable input.**		
Enable Input Enable/Disable	Disable	Disable	Disable
Input logic	Positive Logic	Positive Logic	Positive Logic
Ring Length Setting	**Set ring length.**		
Ring Length Enable/Disable	Disable	Disable	Disable
Ring Length	2147483648	2147483648	2147483648
Measurement Unit Time	**Set the measurement unit time (ms) for the pulse density measurement mode and rotation speed measurement mode.**		
Measurement Unit Time	1000 ms	1000 ms	1000 ms
Number of Pulses per Rotation	**Set the number of pulses per rotation when using the rotation speed measurement mode.**		
Number of Pulses per Rotation	1000 pulse	1000 pulse	1000 pulse

■Changing the program

Change the high-speed counter program by referring to the following program example.

[Example of program]

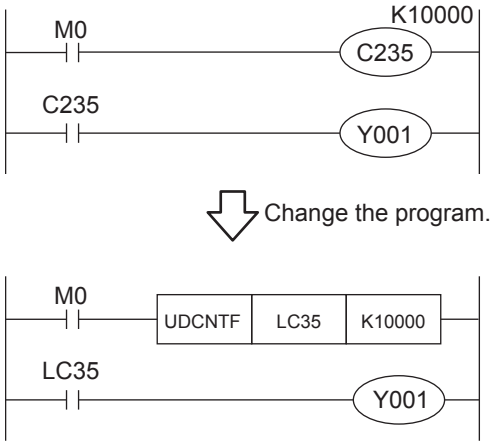

Precautions when using the routine timer

When the routine timer (T192 to T199) is used with the FX3G, it will not operate just by switching to the FX5UJ.

The routine timer must be set by the parameter. For the setting procedure, refer to the following.

■Parameter setting procedure of the routine timer

Set the use of the routine timer and the start device number.

[Parameter] ⇨ [FX5UJCPU] ⇨ [CPU Parameter] ⇨ "Memory/Device Setting" ⇨ "Device/Label Memory Area Setting"

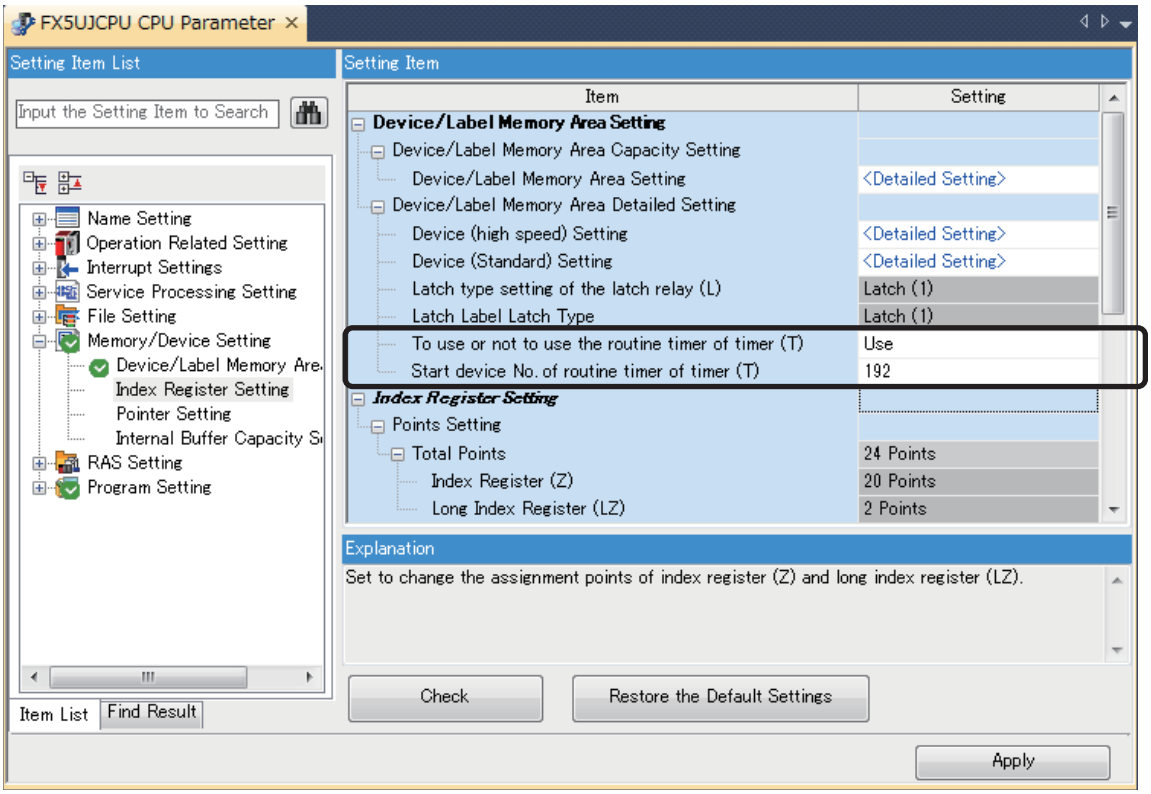

Serial communication channel assignment (RS-485, RS-232C)

When the FX3G is replaced with the FX5UJ, the assignment of communication channels that can be used changes. Change the communication channels specified in instructions and parameter settings according to the specifications.

■FX3G communication channel assignment

• FX3G-14M□ and FX3G-24M□

A serial port with one channel can be connected using a communication function expansion board and a special communication adapter.

The configurable combinations are shown below.

[Configuration example 1]

Using a special communication adapter

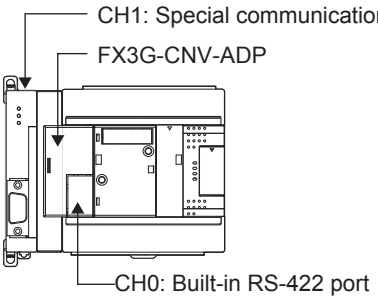

[Configuration example 2]

Using a communication function expansion board

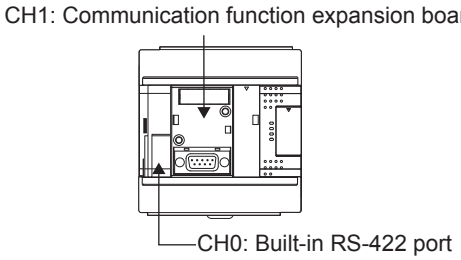

• FX3G-40M□ and FX3G-60M□

A serial port with up to two channels can be connected using a communication function expansion board and a special communication adapter.

The configurable combinations are shown below.

[Configuration example 1]

Using a communication function expansion board and a special communication adapter at the same time

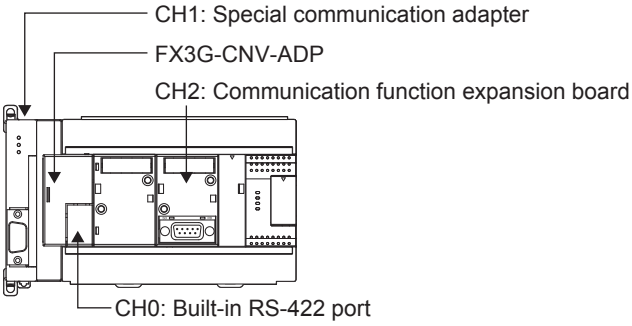

[Configuration example 2]

Using two special communication adapters

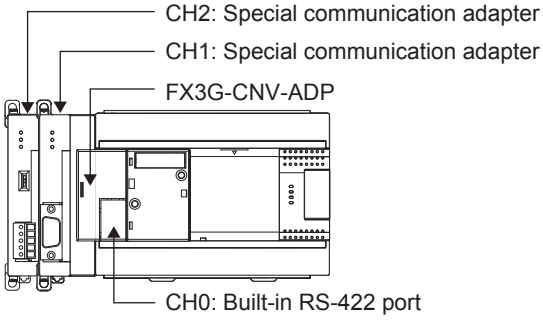

■FX5UJ communication channel assignment

A serial port with up to two channels can be connected using a communication board and a communication adapter.

The communication channel assignments are fixed regardless of the system configuration.

The configurable combinations are shown below.

[Configuration example 1]

Using a communication board and a communication adapter at the same time

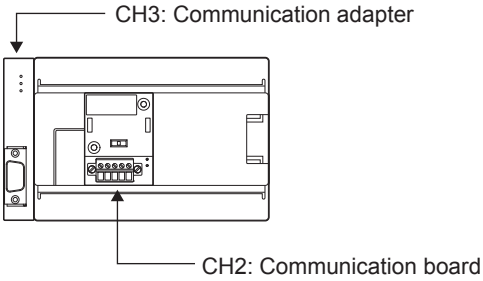

[Configuration example 2]

Using two communication adapters

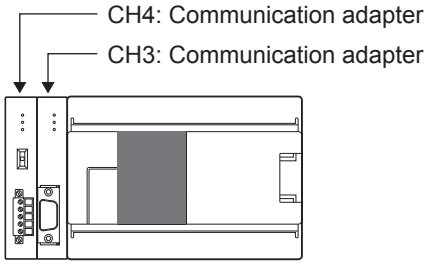

Ex.

When two special communication adapters connected to the FX3G are replaced with two FX5UJ communication adapters, the communication channels change from CH1 and CH2 to CH3 and CH4.

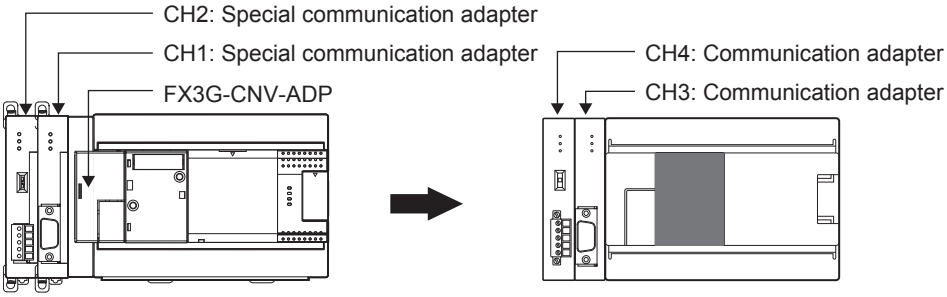

4.5 Replacement of the PLC

The main points to consider during replacement of the CPU module and extension modules are explained below.
For details of each item, check the reference pages in this document, and related manuals such as the PLC Hardware Manual and Programming Manual.

Device classification	Item	Operation content and points of attention	Reference page
CPU module	Reuse of the input/output wiring	Rewire the connection part of the terminal block type.	☞ Page 44
Other extension modules	Wiring to each module		
Verifying operation of the equipment	Operation and test of the PLC program	Operate the converted PLC program and hardware devices, and check and adjust the device function and operation timing. Be aware of the precautions described on the reference page for replacing the project, and check that the devices operate as they are designed.	☞ Page 51

4.6 Specifications Comparison

The following table lists the specifications comparison between the FX3G and FX5UJ.

Item		FX3G			FX5UJ		
Operation control system		Stored program repetitive operation system			Stored program repetitive operation system		
Input/output control system		Refresh system			Refresh system		
Programming language		Ladder diagram (LD) Structured text (ST) Function block diagram/ladder diagram (FBD/LD) Sequential function chart (SFC)			Ladder diagram (LD) Structured text (ST) Function block diagram/ladder diagram (FBD/LD) Sequential function chart (SFC)*1		
Program memory	Max. memory capacity/ type	32000 steps Max. allowable write: 20000 times			48000 steps Max. allowable write: 20000 times		
	Writing function during running	Provided			Provided		
	Security function	Keyword/customer keyword function			Block password function/file password function		
Real-time clock	Clock function	Year, month, day, hour, minute, second, day of week (automatic leap year adjustment) Differences per month ±45 sec./25℃			Year, month, day, hour, minute, second, day of week (automatic leap year adjustment) Differences per month ±45 sec./25℃		
Processing speed	Basic instructions	LD X0: 210ns (standard mode) MOV D0 D1: 520ns (standard mode)			LD X0: 34ns MOV D0 D1: 34ns		
Number of input/output points	(1) Extension-combined number of input points	128 points or less	128 points or less (Total number of points for (1) and (2))	256 points or less (Total number of points for (1) to (3))	256 points or less	256 points or less (Total number of points for (1) and (2))	256 points or less (Total number of points for (1) to (3))
	(2) Extension-combined number of output points	128 points or less			256 points or less		
	(3) Number of remote I/O points	128 points or less (the total number of remote I/O points in CC-Link and AnyWireASLINK)			256 points or less (the total number of remote I/O points in CC-Link and AnyWireASLINK)		
Input relay		128 points (X)			256 points (X)		
Output relay		128 points (Y)			256 points (Y)		
Auxiliary relay		7680 points (M)			7680 points (M)		
State		4096 points (S)			4096 points (S)		
Timer (on-delay timer)	Timer	310 points (T)			512 points (T)*2		
	Retentive timer	10 points (T)			16 points (ST)		
Variable analog potentiometers		VR1: D8030 VR2: D8031 (The two built-in analog volumes can be used as analog timers.)			—		
Counter	For 16 bits	200 points (C)			256 points (C)		
	For 32 bits	35 points (C)			64 points (LC)		

Item		FX3G	FX5UJ
High-speed counter	1-phase 1-count input in both directions (32 bits up/down)	C235	LC35
		C236	LC36
		C237	LC37
		C238	LC38
		C239	LC39
		C240	LC40
		C241	LC41
		C242	LC42
		C243	LC43
		C244	LC44
		C245	LC45
	1-phase 2-count input (32 bits up/down)	C246	LC46
		C247	LC47
		C248	LC48
		C249	LC49
		C250	LC50
	2-phase 2-count input (32 bits up/down)	C251	LC51
		C252	LC52
		C253	LC53
		C254	LC54
		C255	LC55
Data register		8000 points (D)	8000 points (D)
Index register	For 16 bits	16 points (V, Z)	20 points (Z)
	For 32 bits	—	2 points (LZ)
Extension register		24000 points (R)	32768 points (R)
Extension file register		24000 points (ER)	32768 points (ER) (stored in SD memory card)
Pointer		2048 points (P)	2048 points (P)
Interrupt pointer		9 points (I)	178 points (I)

*1 For the compatible versions, refer to the following.
MELSEC iQ-F FX5 User's Manual (Application)

*2 This item indicates the total number of count of the 10ms timer, 100ms timer, and 1ms timer.

5 REPLACEMENT FROM FX3GC TO FX5UC

5.1 Outline

The FX5UC is equipped with features such as communication and high-speed input/output, and can easily be expanded with expansion boards and expansion adapters. Up to eight I/O modules and FX5 intelligent function modules (combined) can be connected.
The procedures and points for replacing an existing model with the FX5UC are shown below. Use this information to consider replacing existing models.

Points to consider

- In the "Recommended substitute models" column, MELSEC iQ-F series models that can be used independently as an alternative to the FX3GC are listed. However, depending on working conditions and system configuration (connection status of the extension modules), or when the number of I/O points actually used is small, there are cases where other models are more suitable as replacements.
- As recommended substitute models for devices such as extension modules and expansion boards, devices that can be connected to the FX5UC CPU module are listed.
- Although "Special notes" describes the points users must be aware of to replace each model, it does not include specifications differences between recommended substitute models and current models (such as the dimensions of substitute model being smaller than the current model). Therefore, when replacing the model, check specifications of each model (such as the dimensions and power specifications) in the manual as well as "Special notes".
- For a model where it's been determined that no substitute models exist based on the above principle, the phrase "No recommended substitute models" is used. However, depending on applications and system configurations, it may still be possible to replace such a model with an FX5UC system configuration. Identify which functions and features are necessary, and consider replacing the model with the FX5UC system configuration.

5.2 Replacement Procedure

The procedure for replacing the FX3GC with the FX5UC is shown below.

1. Selection of the models

Select the substitute models.

☞ Page 62 Selection of Substitute Models

2. Conversion of the program

Convert the program used in the FX3GC so that it can be used in the FX5UC.

☞ Page 68 Conversion of the Projects

3. Replacement with the substitute models

Replace the PLCs.

☞ Page 75 Replacement of the PLC

5.3 Selection of Substitute Models

Recommended substitute models

CPU modules (FX3GC → FX5UC)

The recommended substitute models of the FX5UC corresponding to the FX3GC are shown below.
Please consider replacing the currently used CPU modules with the following recommended substitute models.

Current model	Recommended substitute model	Special notes
FX3GC-32MT/D	FX5UC-32MT/D	—
FX3GC-32MT/DSS	FX5UC-32MT/DSS	—

Extension devices (FX3GC → FX5UC)

The following list shows the extension devices that will be necessary to replace simultaneously when replacing the CPU module from the FX3GC to FX5UC.
If there are no substitute models with the same function as the existing model, check the "Special notes" and consider re-configuring the system.

■Extension I/O

Current model	Recommended substitute model	Special notes
FX2NC-16EX	FX5-C16EX/D	—
FX2NC-16EX-DS	FX5-C16EX/DS	—
FX2NC-16EX-T	FX5-C32EX/DS-TS	The number of I/O points increases in the recommended substitute models. The wiring must be replaced from the European terminal block to the spring clamp terminal block.
FX2NC-16EX-T-DS	FX5-C32EX/DS-TS	—
FX2NC-16EYT	FX5-C16EYT/D	—
FX2NC-16EYT-DSS	FX5-C16EYT/DSS	—
FX2NC-16EYR-T	FX5-C16EYR/D-TS	The wiring must be replaced from the European terminal block to the spring clamp terminal block.
FX2NC-16EYR-T-DS	FX5-C16EYR/D-TS	—
FX2NC-32EX	FX5-C32EX/D	—
FX2NC-32EX-DS	FX5-C32EX/DS	—
FX2NC-32EYT	FX5-C32EYT/D	—
FX2NC-32EYT-DSS	FX5-C32EYT/DSS	—
FX2NC-64ET	FX5-C32EX/D+FX5-C32EYT/D	—
FX2N-8ER	FX5-16ER/ES	The number of I/O points increases in the recommended substitute models.
FX2N-8ER-ES/UL	FX5-16ER/ES	The number of I/O points increases in the recommended substitute models.
FX2N-8EX	FX5-8EX/ES	—
FX2N-8EX-ES/UL	FX5-8EX/ES	—
FX2N-8EX-UA1/UL	No recommended substitute models	—
FX2N-16EX	FX5-16EX/ES	—
FX2N-16EX-ES/UL	FX5-16EX/ES	—
FX2N-16EX-C	FX5-CNV-IF+FX5-C16EX/D	Only a connector type module can be connected after (on the right side of) FX5-CNV-IF.
FX2N-16EXL-C	No recommended substitute models	—
FX2N-8EYR	FX5-8EYR/ES	—
FX2N-8EYR-ES/UL	FX5-8EYR/ES	—
FX2N-8EYR-S-ES/UL	No recommended substitute models	—
FX2N-8EYT	FX5-8EYT/ES	—
FX2N-8EYT-ESS/UL	FX5-8EYT/ESS	—

Current model	Recommended substitute model	Special notes
FX2N-8EYT-H	No recommended substitute models	—
FX2N-16EYR	FX5-16EYR/ES	—
FX2N-16EYR-ES/UL	FX5-16EYR/ES	—
FX2N-16EYT	FX5-16EYT/ES	—
FX2N-16EYT-ESS/UL	FX5-16EYT/ESS	—
FX2N-16EYT-C	FX5-CNV-IF+FX5-C16EYT/D	Only a connector type module can be connected after (on the right side of) FX5-CNV-IF.
FX2N-16EYS	No recommended substitute models	—

■Extension device

Current model	Recommended substitute model	Special notes
FX2N-4AD-TC	FX5-4AD-TC-ADP	The wiring must be replaced from the screw terminal block to the European terminal block.
FX2N-4AD-PT	FX5-4AD-PT-ADP	The wiring must be replaced from the screw terminal block to the European terminal block.
FX2N-5A	FX5-4AD+FX5-4DA	The wiring must be replaced from the screw terminal block to the spring clamp terminal block.
FX2N-2AD	FX5-4AD	The wiring must be replaced from the screw terminal block to the spring clamp terminal block.
FX2N-8AD	FX5-8AD	The wiring must be replaced from the screw terminal block to the spring clamp terminal block.
FX3U-4AD	FX5-4AD	The wiring must be replaced from the screw terminal block to the spring clamp terminal block.
FX2N-2LC	FX5-4LC	The wiring must be replaced from the screw terminal block to the spring clamp terminal block.
FX3U-4LC	FX5-4LC	The wiring must be replaced from the screw terminal block to the spring clamp terminal block.
FX2N-2DA	FX5-4DA	The wiring must be replaced from the screw terminal block to the spring clamp terminal block.
FX3U-4DA	FX5-4DA	The wiring must be replaced from the screw terminal block to the spring clamp terminal block.
FX2N-32CCL	FX5-CCL-MS	Set it as an intelligent device station when using the recommended substitute models.*1
FX2N-64CL-M	No recommended substitute models	—
FX3U-16CCL-M	FX5-CCL-MS	Set it as the master station when using the recommended substitute model.*1
FX3U-64CCL	FX5-CCL-MS	Set it as an intelligent device station when using the recommended substitute models.*1
FX3U-128ASL-M	FX5-ASL-M	—
FX3U-32DP	No recommended substitute models	—

*1 FX5-CCL-MS can be used as a master station or an intelligent device station.

■Expansion adapter

Current model	Recommended substitute model	Special notes
FX3U-232ADP	FX5-232ADP	—
FX3U-232ADP-MB	FX5-232ADP	—
FX3U-485ADP	FX5-485ADP	—
FX3U-485ADP-MB	FX5-485ADP	—
FX3U-ENET-ADP	No recommended substitute models	Ethernet port is built into FX5UC CPU module.
FX3U-3A-ADP	FX5-4A-ADP	—
FX3U-4AD-ADP	FX5-4AD-ADP	—
FX3U-4DA-ADP	FX5-4DA-ADP	—
FX3U-4AD-PT-ADP	FX5-4AD-PT-ADP	—
FX3U-4AD-PTW-ADP	FX5-4AD-PT-ADP	—
FX3U-4AD-PNK-ADP	No recommended substitute models	—
FX3U-4AD-TC-ADP	FX5-4AD-TC-ADP	—

■Option

Current model	Recommended substitute model	Special notes
FX2NC-CNV-IF	FX5-CNV-IFC	—
FX3UC-1PS-5V	FX5-C1PS-5V	—
FX-30P	No recommended substitute models	—
FX0N-30EC	FX5-30EC	—
FX0N-65EC	FX5-65EC	—
FX2N-CNV-BC	FX5-CNV-BC	—

Extension devices that can still be used after replacing the CPU module with FX5UC

The following shows extension devices can still be used by connecting a bus conversion module (FX5-CNV-BUSC or FX5-CNV-BUS) after replacing the CPU module with the FX5UC (FX3GC → FX5UC).

Analog	Network	Terminal block*1	
FX3U-4AD FX3U-4DA FX3U-4LC	FX3U-16CCL-M*2 FX3U-64CCL FX3U-128ASL-M*2 FX3U-32DP	FX-16E-TB FX-32E-TB FX-16EX-A1-TB FX-16EYR-TB FX-16EYS-TB FX-16EYT-TB	FX-16E-TB/UL FX-32E-TB/UL FX-16EYR-ES-TB/UL FX-16EYS-ES-TB/UL FX-16EYT-ES-TB/UL FX-16EYT-ESS-TB/UL

*1 The terminal block can be used without connecting a bus conversion module.
*2 It is necessary to set the parameter with the PLC program.

Battery

The battery (FX3U-32BL) used in the FX3GC can also be used with the FX5UC.

Precautions regarding the hardware

Comparison of the FX3GC and FX5UC and precautions for replacement

The following list shows precautions regarding the hardware. Check details in the manuals of each model when replacing.

■Differences and precautions regarding the hardware

Item	Difference		Precautions
	FX3GC	FX5UC	
Extension of FX2N and FX3U	Extension possible	Extension is possible only for certain modules. FX5-CNV-BUSC or FX5-CNV-BUS is required for extension.	Connection is not possible for some intelligent modules of the FX3U.
Input hardware filter (When the digital filter is 0) • High-speed counter • Input interruption function • Pulse catch function	Approx. 10 ms X0 to X7 each has a built-in digital filter. The time can be changed to 0 to 15 ms with D8020. When this is set to 0, X0, X1, X3, and X4 are 10 μs and X2, X5, X6, and X7 are 50 μs.	■FX5UC-32M X0 to X5: • ON: 2.5 μs or less • OFF: 2.5 μs or less X6 to X17: • ON: 30 μs or less • OFF: 50 μs or less ■FX5UC-64M, FX5UC-96M X0 to X7: • ON: 2.5 μs or less • OFF: 2.5 μs or less X10 to X17: • ON: 30 μs or less • OFF: 50 μs or less X20 and later: • ON: 50 μs or less • OFF: 150 μs or less	Noises that were not detected by the FX3GC may possibly be captured as an input. Take external measures against noise, or set an appropriate input response time parameter (initial value: 10ms).
Input signal current	X0 to X7: 7 mA X10 or later: 5 mA	X0 to X17: 5.3 mA X20 or later: 4 mA	The input signal current value of FX5UC is lower than that of FX3GC. Therefore, when replacing existing models, check the specifications of the external devices.

■External dimensions

When replacing the modules, be aware of external dimensions differences between FX3GC and FX5UC.

• FX3GC

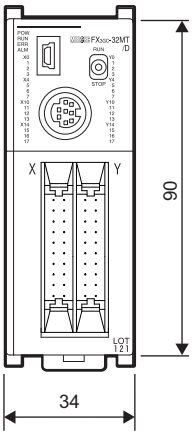

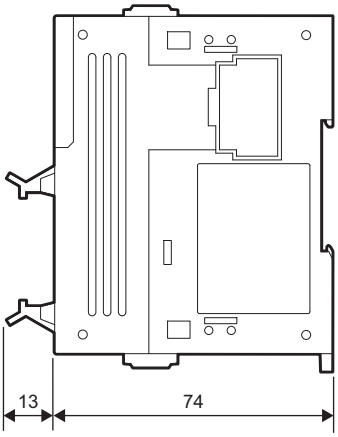

External color: Munsell 0.08GY/7.64/0.81
Unit: mm
The terminal block uses M3 terminal screws.
A 35 mm-width DIN rail can be installed.

Model name	Weight: kg
FX3GC-32MT/D	Approx. 0.20
FX3GC-32MT/DSS	Approx. 0.20

• FX5UC

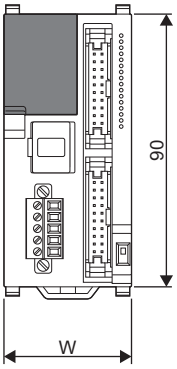

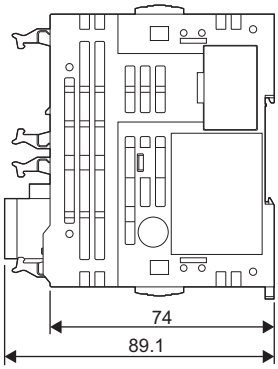

External color: Munsell 0.6B7.6/0.2
Unit: mm
A 35 mm-width DIN rail can be installed.

[Accessories]
FX2NC-100MPCB power cable
FX2NC-100BPCB power cable (only FX5UC-□MT/D)

Model name	W (mm)	Weight: kg
FX5UC-32MT/D, DSS	42.1	Approx. 0.20
FX5UC-64MT/D, DSS	62.2	Approx. 0.30
FX5UC-96MT/D, DSS	82.3	Approx. 0.35

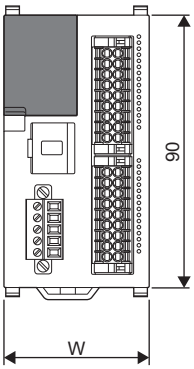

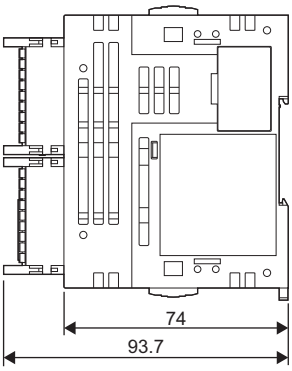

External color: Munsell 0.6B7.6/0.2
Unit: mm
A 35 mm-width DIN rail can be installed.

[Accessories]
FX2NC-100MPCB power cable

Model name	W (mm)	Weight: kg
FX5UC-32MR/DS-TS	68.2	Approx. 0.35

■Cable sizes for European type terminal block

Suitable wiring and tightening torque are described below.

Model name	Wire size for one wire	Wire size for two wires	Ferrule with insulation sleeve (wire size)	Tightening torque	Stripping length of wire ends
FX3U-485-BD, FX3U-485ADP, FX3U-485ADP-MB	22 to 20 AWG	22 AWG	22 to 20 AWG	0.22 to 0.25 N·m	9 mm
FX5-485-BD, FX5-485ADP					
FX5-4AD-ADP, FX5-4DA-ADP, FX5-4A-ADP, FX5-4AD-PT-ADP, FX5-4AD-TC-ADP				0.20 N·m	

5.4 Conversion of the Projects

When converting FX3GC projects to FX5UC projects, use GX Works3.

After converting the projects, it may be necessary to adjust the programs (instructions, devices) and parameters.

Operation method for replacing projects

To convert FX3GC projects to FX5UC projects, perform operations in GX Works3.

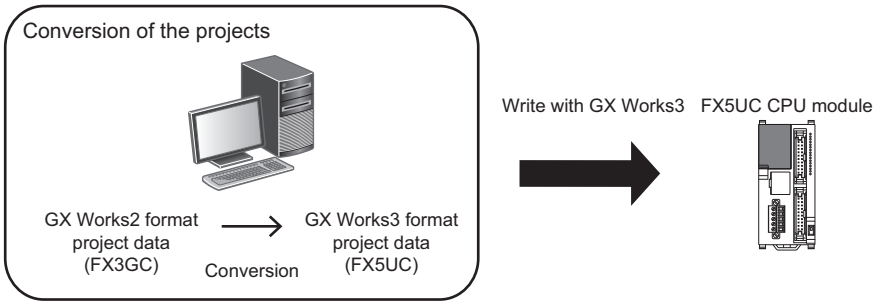

To convert the projects, install the engineering tool of the following version.

Engineering tool	Version	Remarks
GX Works3	1.020W or later	—
GX Works2	1.519R or later	Supplied with GX Works3.

Precautions

- To read projects of GX Works2 using GX Works3, convert beforehand using GX Works2, and then read the projects. Even for projects converted using GX Works2, conversion may not proceed depending on the state of the program. If there is an error in the program, reading will be canceled.
- To read projects of GX Works2 using GX Works3, delete the security (user management, data security setting) of GX Works2 beforehand and then read the projects. If the security is set to the GX Works2 project, the reading will be canceled.
- To read projects of GX Works2 using GX Works3, administrator rights are required.

Operating procedure

1. Start up GX Works3.

2. Open the FX3GC project.

Select [Project] ⇨ [Open Other Format File] ⇨ [GX Works2 Format] ⇨ [Open Project] ⇨ Project (***.gxw).

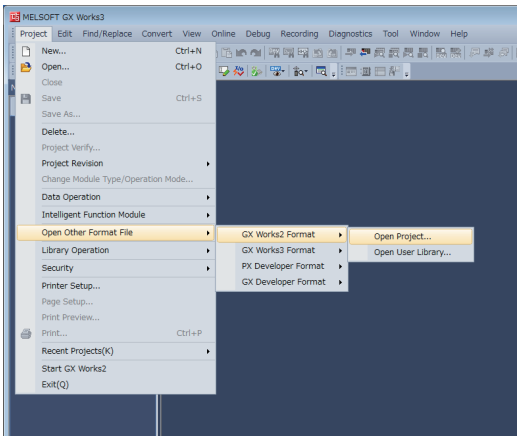

3. The following display is shown.

The following selection screen of the new module type is shown.

Select the new module type and press the [Execute] button.

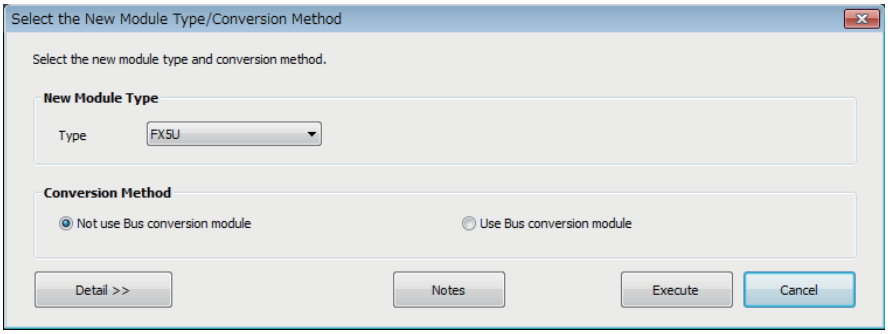

4. When conversion is completed, the following message is shown.

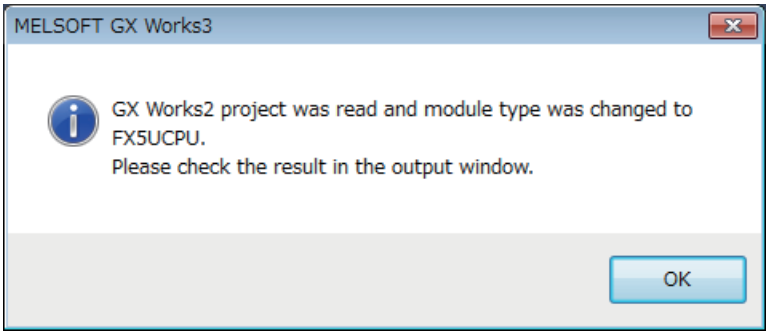

5. Check the contents of the module change result in the "Output window".

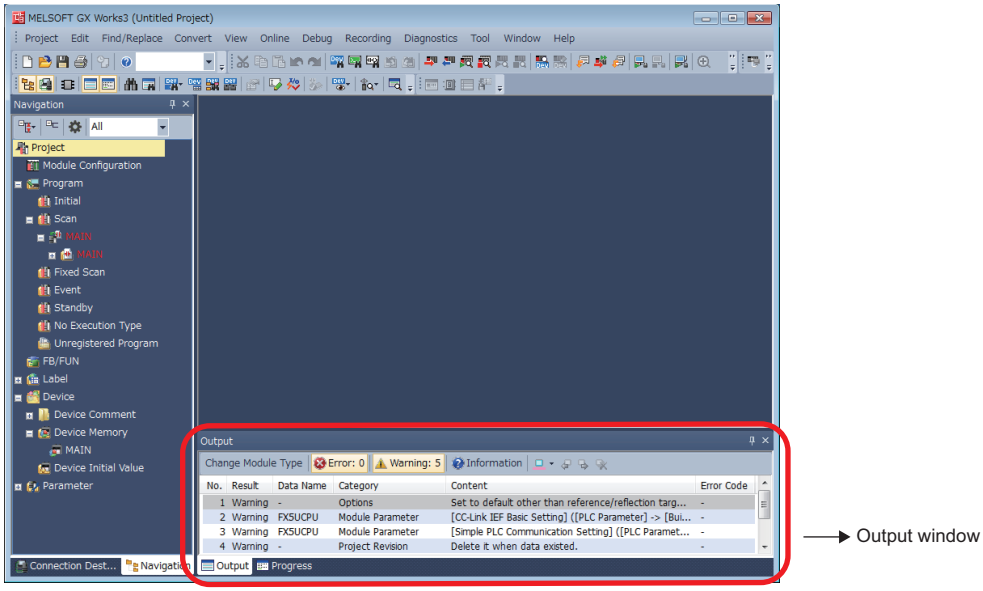

Precautions

- For GX Works3 versions earlier than 1.025B, the program must be changed from "No Execution Type". (Changing to "Scan" or other settings)
- When projects are converted, the program instructions and devices may be changed. Check the contents of the program. Parameters other than the CC-Link network parameters[*1] will be deleted. Set the parameters if necessary.

*1 For the network parameters of CC-Link, refer to ☞ Page 71 Precautions when replacing the parameters.

6. Set the model name of the CPU for the system parameter.

[System Parameter] ⇨ [I/O Assignment Setting] ⇨ Model Name

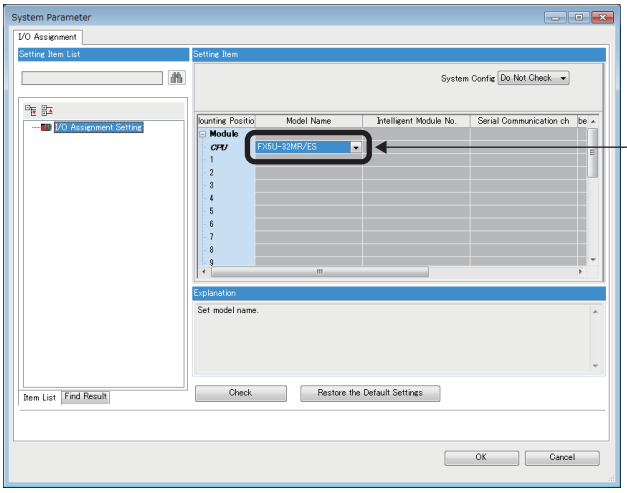

7. Perform conversion.

[Convert] ⇨ [Rebuild All]

Precautions when converting the projects

- When converting FX3GC projects using GX Works3, be aware that the program (instructions and devices) may be changed.
- When converting projects, the number of steps may increase and writing to the FX5UC may fail. Check the number of steps after conversion.
- Characters used for the label name in GX Works2 may correspond to reserved words or illegal characters in GX Works3. In that case, change the label name.

For precautions regarding the instruction and device replacement, refer to ☞ Page 140 Instruction Replacement List.

Precautions when replacing the parameters

When converting FX3GC projects to FX5UC projects, the setting data of the parameters (PC parameters and network parameters) and special modules (intelligent function modules) will be deleted. Therefore, it is necessary to set the data with GX Works3 again.

Also, GX Works3 does not support the following parameters of the FX3GC, so it is necessary to set these parameters with GX Works3 again.

- Network parameters (CC-Link)
- Intelligent function module parameter (AnyWireASLINK)

Precautions when replacing other functions

Precautions when using the high-speed counters

When the high-speed counters (C235 to C255) are used with the FX3GC, they will not operate just by switching to the FX5UC.

It is necessary to set the FX3 series compatible high-speed counters and change the program by the parameter.

■Parameter setting procedure of the FX3 series compatible high-speed counters

1. Select "Long Counter Specification" for the specification method for high-speed counter.

[Parameter] ⇨ [FX5UCCPU] ⇨ [Module Parameter] ⇨ [High Speed I/O] ⇨ "Input Function" ⇨ "High Speed Counter" ⇨ "Detailed Setting" ⇨ "Other"

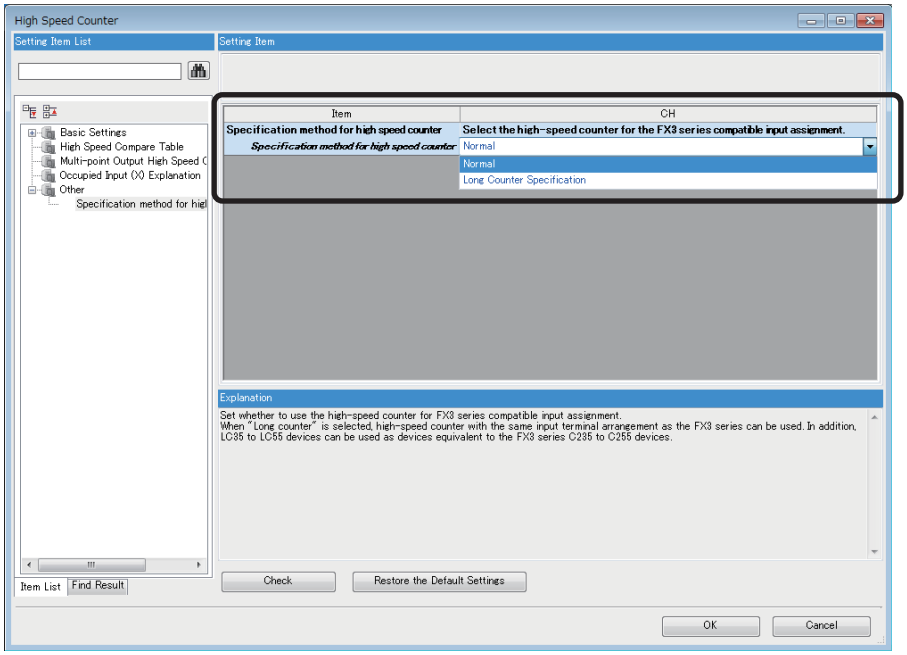

2. Set the function of the high-speed counters used with the FX3GC.

Select the input comparison enable/disable of the counter device and preset input compatible with the FX3 series, and select the control switch.

Item	CH1	CH2	
Use/Do Not Use Counter	**Set whether to use counter or not.**		
Use/Not Use	Enable	Disable	Disable
Counter device	**Select the high-speed counter for the FX3 series compatible input assignment.**		
Counter device	LC35 (Operation equivalent to C235)	LC36 (Operation equivalent to C236)	LC37 (Operatio
Operation Mode	**Set operation mode.**		
Operation Mode	Normal Mode	Normal Mode	Normal Mode
Pulse Input Mode	**Set pulse input mode.**		
Pulse Input Mode	1-Phase 1 Input (S/W Up/Down Switch)	1-Phase 1 Input (S/W Up/Down Switch)	1-Phase 1 Inpu
Preset Input	**Set preset input.**		
Preset Input Enable/Disable	Disable	Disable	Disable
Input logic	Positive Logic	Positive Logic	Positive Logic
Preset Value	0	0	0
Input Comparison Enable/Disable	Enable	Enable	Enable
Control Switch	Rising	Rising	Rising
Enable Input	**Set enable input.**		
Enable Input Enable/Disable	Disable	Disable	Disable
Input logic	Positive Logic	Positive Logic	Positive Logic
Ring Length Setting	**Set ring length.**		
Ring Length Enable/Disable	Disable	Disable	Disable
Ring Length	2147483648	2147483648	2147483648
Measurement Unit Time	**Set the measurement unit time (ms) for the pulse density measurement mode and rotation speed measurement mode.**		
Measurement Unit Time	1000 ms	1000 ms	1000 ms
Number of Pulses per Rotation	**Set the number of pulses per rotation when using the rotation speed measurement mode.**		
Number of Pulses per Rotation	1000 pulse	1000 pulse	1000 pulse

■Changing the program

Change the high-speed counter program by referring to the following program example.

Program example

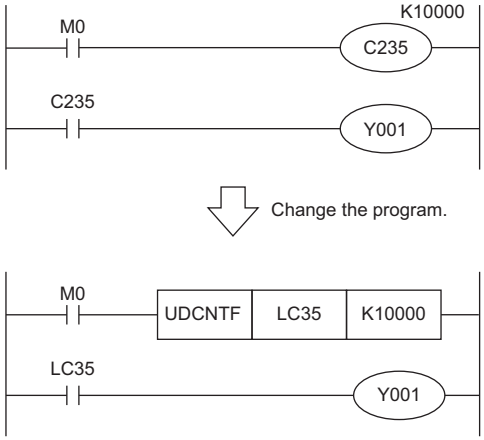

Precautions when using the routine timer

When the routine timer (T192 to T199) is used with the FX3GC, it will not operate just by switching to the FX5UC.

The routine timer must be set by the parameter.

■Parameter setting procedure of the routine timer

Set the use of the routine timer and the start device number.

[Parameter] ⇨ [FX5UCCPU] ⇨ [CPU Parameter] ⇨ "Memory/Device Setting" ⇨ "Device/Label Memory Area Setting"

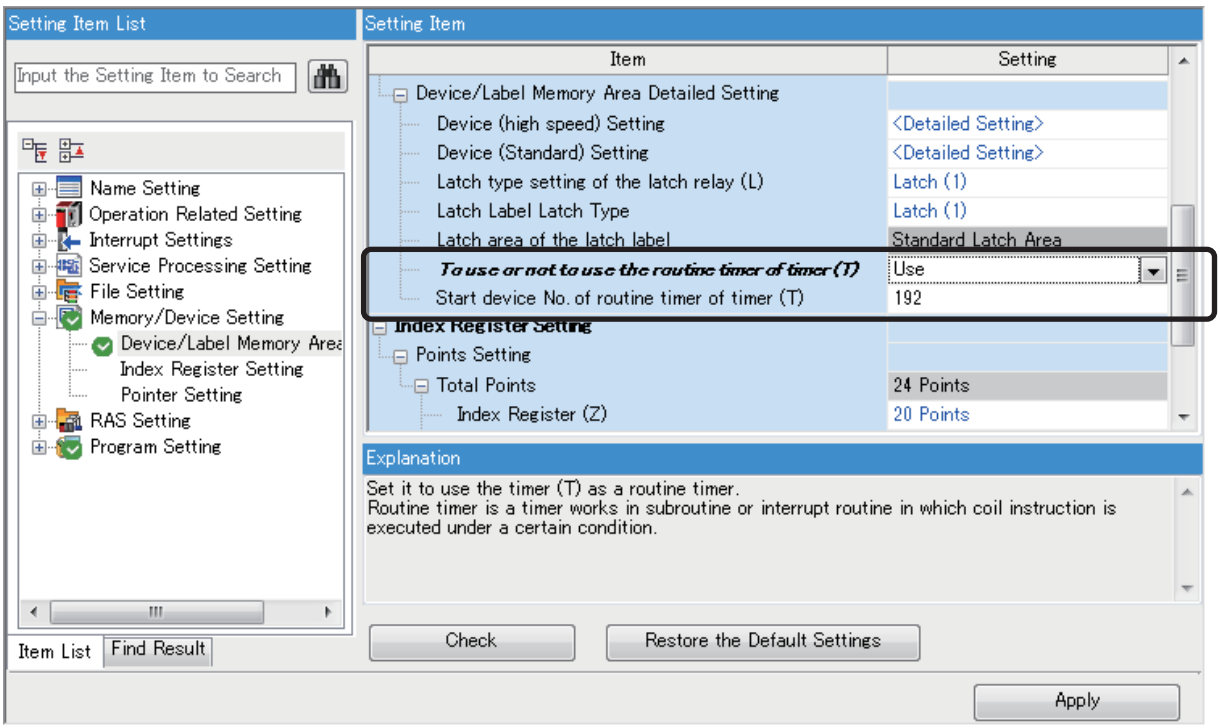

Serial communication channel assignment (RS-485, RS-232C)

When the FX3GC is replaced with the FX5UC, the assignment of communication channels that can be used changes.
Change the communication channels specified in instructions and parameter settings according to the specifications.

■FX3GC communication channel assignment

Special communication adapters can be used to connect up to two channels of serial ports.
The configurable combination is shown below.

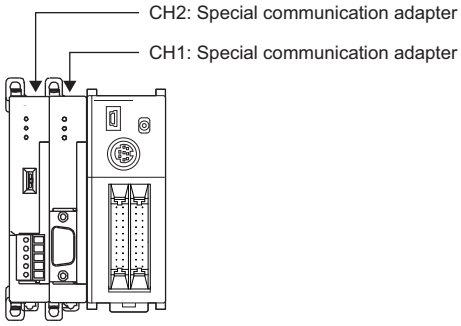

■FX5UC communication channel assignment

The built-in RS-485 port and communication adapters can be used to connect up to three channels of serial ports.
The communication channel assignments are fixed regardless of the system configuration.

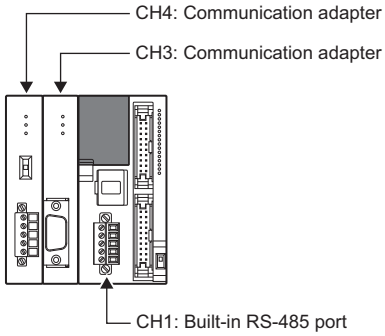

Ex.

When a special communication adapter connected to the FX3GC is replaced with an FX5UC communication adapter, the communication channel changes from CH1 to CH3.

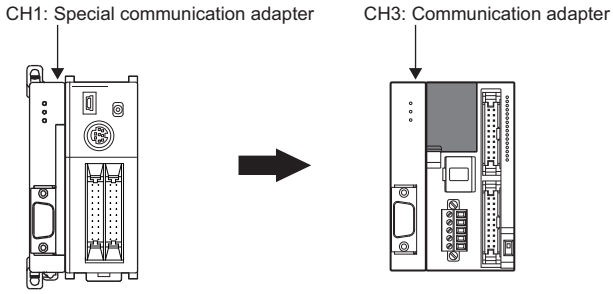

5.5 Replacement of the PLC

The main points to consider during replacement of the CPU module and extension devices are explained below.
For details of each item, check the reference pages in this document, and related manuals such as the PLC Hardware Manual and Programming Manual.

Device classification	Item	Operation content and points of attention	Reference page
CPU module	Connector connection of the input/output wiring	The input/output connector and 24 VDC connector types and signal names are the same for the FX3GC and FX5UC. Reconnect the cable removed from the FX3GC to the FX5UC. Rewire the connection part of the terminal block type.	☞ Page 62
	Connector connection of the 24 VDC power cable		
Other extension modules	Wiring to each module	The input/output connector (excluding for the FX2NC-64ET) and 24VDC connector types and signal names are the same for the FX2NC and FX5UC. Reconnect the cable removed from the FX2NC to the FX5UC. Rewire the connection part of the terminal block type.	
Verifying operation of the equipment	Operation and test of the PLC program	Operate the converted PLC program and hardware devices, and check and adjust the device function and operation timing. Be aware of the precautions described on the reference page for replacing the project, and check that the devices operate as they are designed.	☞ Page 68

6 REPLACEMENT FROM FX3GE TO FX5UJ

6.1 Outline

The FX5UJ is equipped with features such as communication and high-speed input/output, and can easily be expanded with expansion boards and expansion adapters. Up to eight I/O modules and FX5 intelligent function modules (combined) can be connected.
The procedures and points for replacing an existing model with the FX5UJ are shown below. Use this information to consider replacing existing models.

Points to consider

- In the "Recommended substitute models" column, MELSEC iQ-F series models that can be used independently as an alternative to FX3GE are listed. According to usage and system configuration (connection status of the extension modules), and cases when the number of I/O points actually used are small, other models than the described "recommended substitute models" may be suitable for replacement.
- As recommended substitute models for devices such as extension modules and expansion boards, devices that can be connected to the FX5UJ CPU module are listed.
- Although "Special notes" describes the points users must be aware of to replace each model, it does not include specifications differences between recommended substitute models and current models (such as the dimensions of substitute model being smaller than the current model). Therefore, when replacing the model, check specifications of each model (such as the dimensions and power specifications) in the manual as well as "Special notes".
- For a model where it's been determined that no substitute models exist based on the above principle, the phrase "No recommended substitute models" is used. However, depending on applications and system configurations, it may still be possible to replace such a model with an FX5UJ system configuration. Identify which functions and features are necessary, and consider replacing the model with the FX5UJ system configuration.

6.2 Replacement Procedure

The procedure for replacing the FX3GE with the FX5UJ is shown below.

1. Selection of the models

Select the substitute models.

☞ Page 77 Selection of Substitute Models

2. Conversion of the program

Convert the program used in the FX3GE so that it can be used in the FX5UJ.

3. Replacement with the substitute models

Replace the PLCs.

☞ Page 84 Replacement of the PLC

6.3 Selection of Substitute Models

Recommended substitute models

CPU modules (FX3GE → FX5UJ)

The recommended substitute models of the FX5UJ corresponding to the FX3GE are shown below.

Please consider replacing the currently used CPU modules with the following recommended substitute models.

Current model	Recommended substitute model	Special notes
FX3GE-24MR/ES	FX5UJ-24MR/ES+FX5-4A-ADP	The number of I/O points increases in the recommended substitute models.
FX3GE-24MT/ES	FX5UJ-24MT/ES+FX5-4A-ADP	The number of I/O points increases in the recommended substitute models.
FX3GE-24MT/ESS	FX5UJ-24MT/ESS+FX5-4A-ADP	The number of I/O points increases in the recommended substitute models.
FX3GE-40MR/ES	FX5UJ-40MR/ES+FX5-4A-ADP	—
FX3GE-40MT/ES	FX5UJ-40MT/ES+FX5-4A-ADP	—
FX3GE-40MT/ESS	FX5UJ-40MT/ESS+FX5-4A-ADP	—
FX3GE-24MR/DS	FX5UJ-24MR/DS+FX5-4A-ADP	The number of I/O points increases in the recommended substitute models.
FX3GE-24MT/DS	FX5UJ-24MT/DS+FX5-4A-ADP	The number of I/O points increases in the recommended substitute models.
FX3GE-24MT/DSS	FX5UJ-24MT/DSS+FX5-4A-ADP	The number of I/O points increases in the recommended substitute models.
FX3GE-40MR/DS	FX5UJ-40MR/DS+FX5-4A-ADP	—
FX3GE-40MT/DS	FX5UJ-40MT/DS+FX5-4A-ADP	—
FX3GE-40MT/DSS	FX5UJ-40MT/DSS+FX5-4A-ADP	—

Extension devices (FX3GE → FX5UJ)

The following list shows the extension devices that also need to be replaced when replacing the CPU module from FX3GE to FX5UJ.

If there are not any substitute models with the same function as the existing model, check the "Special notes" and consider re-configuring the system.

■Extension I/O

Current model	Recommended substitute model	Special notes
FX2N-8ER	FX5-16ER/ES	The number of I/O points increases in the recommended substitute models.
FX2N-8ER-ES/UL	FX5-16ER/ES	The number of I/O points increases in the recommended substitute models.
FX2N-8EX	FX5-8EX/ES	—
FX2N-8EX-ES/UL	FX5-8EX/ES	—
FX2N-8EX-UA1/UL	No recommended substitute models	—
FX2N-16EX	FX5-16EX/ES	—
FX2N-16EX-ES/UL	FX5-16EX/ES	—
FX2N-16EX-C	FX5-CNV-IF+FX5-C16EX/D	Only a connector type module can be connected after (on the right side of) FX5-CNV-IF.
FX2N-16EXL-C	No recommended substitute models	—
FX2N-8EYR	FX5-8EYR/ES	—
FX2N-8EYR-ES/UL	FX5-8EYR/ES	—
FX2N-8EYR-S-ES/UL	No recommended substitute models	—
FX2N-8EYT	FX5-8EYT/ES	—
FX2N-8EYT-ESS/UL	FX5-8EYT/ESS	—
FX2N-8EYT-H	No recommended substitute models	—
FX2N-16EYR	FX5-16EYR/ES	—
FX2N-16EYR-ES/UL	FX5-16EYR/ES	—
FX2N-16EYT	FX5-16EYT/ES	—
FX2N-16EYT-ESS/UL	FX5-16EYT/ESS	—
FX2N-16EYT-C	FX5-CNV-IF+FX5-C16EYT/D	Only a connector type module can be connected after (on the right side of) FX5-CNV-IF.
FX2N-16EYS	No recommended substitute models	—
FX2N-32ER	FX5-32ER/ES	—
FX2N-32ER-ES/UL	FX5-32ER/ES	—
FX2N-32ET	FX5-32ET/ES	—
FX2N-32ET-ESS/UL	FX5-32ET/ESS	—
FX2N-32ES	No recommended substitute models	—
FX2N-48ER	FX5-32ER/ES+FX5-16ER/ES	—
FX2N-48ER-ES/UL	FX5-32ER/ES+FX5-16ER/ES	—
FX2N-48ET	FX5-32ET/ES+FX5-16ET/ES	—
FX2N-48ET-ESS/UL	FX5-32ET/ESS+FX5-16ET/ESS	—
FX2N-48ER-D	FX5-32ER/DS+FX5-16ER/ES	—
FX2N-48ER-DS	FX5-32ER/DS+FX5-16ER/ES	—
FX2N-48ET-D	FX5-32ET/DS+FX5-16ET/ES	—
FX2N-48ET-DSS	FX5-32ET/DSS+FX5-16ET/ESS	—
FX2N-48ER-UA1/UL	No recommended substitute models	—

■Extension device

Current model	Recommended substitute model	Special notes
FX3U-1PSU-5V	FX5-1PSU-5V	—
FX2N-4AD-TC	FX5-4AD-TC-ADP	The wiring must be replaced from the screw terminal block to the European terminal block.
FX2N-4AD-PT	FX5-4AD-PT-ADP	The wiring must be replaced from the screw terminal block to the European terminal block.
FX2N-5A	FX5-4AD+FX5-4DA	The wiring must be replaced from the screw terminal block to the spring clamp terminal block.
FX2N-2AD	FX5-4AD	The wiring must be replaced from the screw terminal block to the spring clamp terminal block.
FX2N-4AD	FX5-4AD	The wiring must be replaced from the screw terminal block to the spring clamp terminal block.
FX2N-8AD	FX5-8AD	The wiring must be replaced from the screw terminal block to the spring clamp terminal block.
FX3U-4AD	FX5-4AD	The wiring must be replaced from the screw terminal block to the spring clamp terminal block.
FX2N-2LC	FX5-4LC	The wiring must be replaced from the screw terminal block to the spring clamp terminal block.
FX3U-4LC	FX5-4LC	The wiring must be replaced from the screw terminal block to the spring clamp terminal block.
FX2N-2DA	FX5-4DA	The wiring must be replaced from the screw terminal block to the spring clamp terminal block.
FX2N-4DA	FX5-4DA	The wiring must be replaced from the screw terminal block to the spring clamp terminal block.
FX3U-4DA	FX5-4DA	The wiring must be replaced from the screw terminal block to the spring clamp terminal block.
FX2N-32CCL	FX5-CCL-MS	Set it as an intelligent device station when using the recommended substitute model.*1
FX2N-64CL-M	No recommended substitute models	—
FX3U-CAN	No recommended substitute models	—
FX3U-J1939	No recommended substitute models	—
FX3U-16CCL-M	FX5-CCL-MS	Set it as the master station when using the recommended substitute model.*1
FX3U-64CCL	FX5-CCL-MS	Set it as an intelligent device station when using the recommended substitute model.*1
FX3U-128ASL-M	FX5-ASL-M	—
FX3U-32DP	No recommended substitute models	—

*1 FX5-CCL-MS can be used as a master station or an intelligent device station.

■Expansion board

Current model	Recommended substitute model	Special notes
FX3G-4EX-BD	No recommended substitute models	—
FX3G-2EYT-BD	No recommended substitute models	—
FX3G-2AD-BD	No recommended substitute models	—
FX3G-1DA-BD	No recommended substitute models	—
FX3G-232-BD	FX5-232-BD	—
FX3G-485-BD	FX5-485-BD	—
FX3G-485-BD-RJ	FX5-485-BD	The wiring must be replaced from the RJ45 connector to the European terminal block.
FX3G-422-BD	FX5-422-BD-GOT	—
FX3G-CNV-ADP	—	The FX5UJ CPU module does not need the expansion board.
FX3G-8AV-BD	No recommended substitute models	—

■Expansion adapter

Current model	Recommended substitute model	Special notes
FX3U-232ADP	FX5-232ADP	—
FX3U-232ADP-MB		—
FX3U-485ADP	FX5-485ADP	—
FX3U-485ADP-MB		—
FX3U-3A-ADP	FX5-4A-ADP	—
FX3U-4AD-ADP	FX5-4AD-ADP	—
FX3U-4DA-ADP	FX5-4DA-ADP	—
FX3U-4AD-PT-ADP	FX5-4AD-PT-ADP	—
FX3U-4AD-PTW-ADP	FX5-4AD-PT-ADP	—
FX3U-4AD-PNK-ADP	No recommended substitute models	—
FX3U-4AD-TC-ADP	FX5-4AD-TC-ADP	—

■Option

Current model	Recommended substitute model	Special notes
FX3G-EEPROM-32L	No recommended substitute models	An SD memory card can be used instead.
FX3G-5DM	No recommended substitute models	Consider using the Web server function of the FX5UJ CPU module instead.
FX-30P	No recommended substitute models	—
FX0N-30EC	FX5-30EC	—
FX0N-65EC	FX5-65EC	—
FX2N-CNV-BC	FX5-CNV-BC	—

Extension devices that can still be used after replacing the CPU module with FX5UJ

The following shows extension devices can still be used after replacing the CPU module with the FX5UJ (FX3GE → FX5UJ).

Terminal block
FX-16E-TB, FX-32E-TB, FX-16EX-A1-TB, FX-16EYR-TB, FX16EYS-TB, FX-16EYT-TB
FX-16E-TB/UL, FX-32E-TB/UL, FX-16EYR-ES-TB/UL, FX-16EYS-ES-TB/UL, FX-16EYT-ES-TB/UL, FX-16EYT-ESS-TB/UL

Battery

The FX5UJ CPU module cannot use a battery. However, the programs and devices of the FX5UJ CPU module are maintained in the flash memory.

Note that file registers (R) of the FX5UJ CPU module cannot be latched. (☞ Page 154 Device Replacement List)

Precautions regarding the hardwarel

Comparison of FX3GE and FX5UJ and precautions for replacement

The following list shows precautions regarding the hardware. Check details in the manuals of each model when replacing existing models.

■Key hardware differences and replacement precautions regarding FX3GE and FX5UJ

Item	Difference		Precautions
	FX3GE	FX5UJ	
Extension of FX2N and FX3U	Extension possible	Extension not possible	—
Input hardware filter (When the digital filter is 0) • High-speed counter • Input interruption function • Pulse catch function	Approx. 10 ms X0 to X7 each has a built-in digital filter. The time can be changed to 0 to 15 ms with D8020. When this is set to 0, X0, X1, X3, and X4 are 10 μs and X2, X5, X6, and X7 are 50 μs.	■FX5UJ-24M□ X0, X1, X3, and X4: • ON: 5 μs or less • OFF: 5 μs or less X2, X5, X6, and X7: • ON: 30 μs or less • OFF: 50 μs or less X10 to X15: • ON: 50 μs or less • OFF: 150 μs or less ■FX5UJ-40M□ and FX5UJ-60M□ X0, X1, X3, and X4: • ON: 5 μs or less • OFF: 5 μs or less X2, X5, X6, and X7: • ON: 30 μs or less • OFF: 50 μs or less X10 to X17: • ON: 50 μs or less • OFF: 150 μs or less X20 and later: • ON: Approx. 10 ms • OFF: Approx. 10 ms	Noise that was not detected by FX3GE may possibly be mistaken as an input. Take external measures against noise, or set an appropriate input response time parameter (initial value: 10ms).
Input signal current	X0 to X7: 7 mA X10 or later: 5 mA	X0 to X7: 5.3 mA X10 or later: 4 mA	The input signal current value of FX5UJ is lower than that of FX3G. Therefore, when replacing existing models, check the specifications of the external devices.

■External dimensions

When replacing the modules, be aware of external dimensions differences between FX3GE and FX5UJ.

• FX3GE

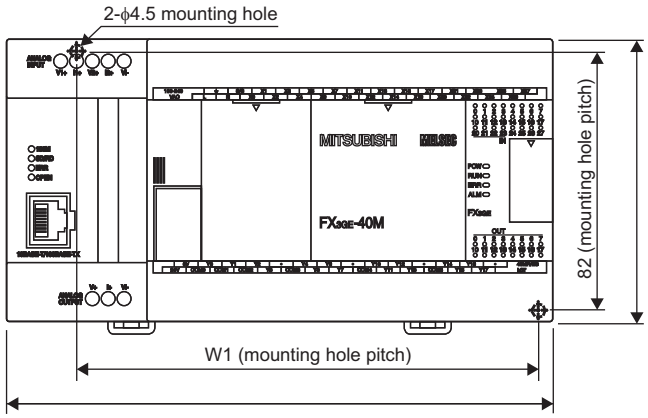

External color: Munsell 0.08GY/7.64/0.81
Top cover: Munsell N1.5
Unit: mm
The terminal block uses M3 terminal screws.
A 35-mm width DIN rail can be installed.

Model name	W: mm	W1: mm	Weight: kg
FX3GE-24M□	130	105	Approx. 0.60
FX3GE-40M□	175	150	Approx. 0.80

• FX5UJ

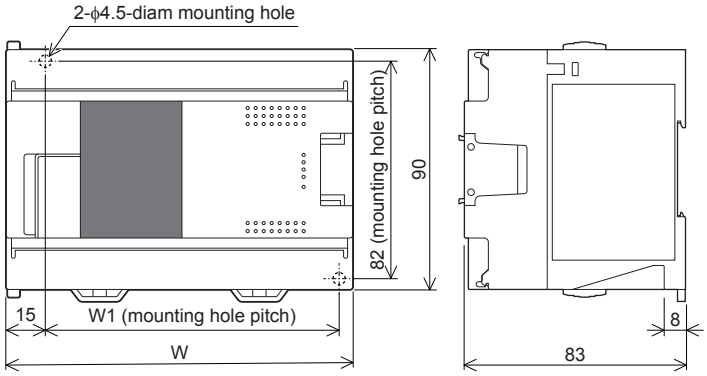

External color: Munsell 0.6B7.6/0.2
Unit: mm
The terminal block uses M3 terminal screws.
A 35-mm width DIN rail can be installed.

Model name	W: mm	W1: mm	Weight: kg
FX5UJ-24M□	95	76	Approx. 0.55
FX5UJ-40M□	130	111	Approx. 0.65
FX5UJ-60M□	175	156	Approx. 0.80

■Cable sizes for European type terminal block

Suitable wiring and tightening torque are described below.

	Wire size for one wire	Wire size for two wires	Ferrule with insulation sleeve (wire size)	Tightening torque	Stripping length of wire ends
FX3G-485-BD, FX3U-485ADP, FX3U-485ADP-MB	22 to 20 AWG	22 AWG	22 to 20 AWG	0.22 to 0.25 N·m	9 mm
FX5-485-BD, FX5-485ADP					
FX5-4AD-ADP, FX5-4DA-ADP, FX5-4A-ADP, FX5-4AD-PT-ADP, FX5-4AD-TC-ADP				0.20 N·m	

■Differences and precautions regarding installation of the FX3GE and FX5UJ

The pitch of the holes for installation in a control panel differs between the FX3GE and FX5UJ. For direct installation in a control panel, add installation holes. Also, because the terminal block shapes differ, one terminal block cannot be replaced with the other. (☞ Page 82 External dimensions)

■Differences and precautions regarding the drive power supply of the output section of the FX3GE and FX5UJ

• Output section power supply voltage consolidation

When replacing the FX3GE with the FX5UJ, the power supplies must be consolidated if a separate power supply has been installed for one output common terminal of the FX3GE.

• Maximum output load current

When the FX3GE is replaced with the FX5UJ, the maximum load current of part of the output section changes.

Although one common terminal is used for each output for Y0 to Y2 of the FX3GE-24M□, one common terminal is used for three outputs of Y0 to Y2 of the FX5UJ-24M□.

If a power supply has been installed separately for each common terminal, consolidate the power supplies.

(Example) FX3GE-24MT/ES (output side)

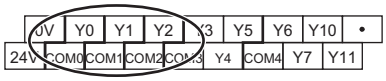

<Maximum output load current>

• Maximum load (resistance load) current of 1 output common terminal: 0.5 A or less

(Example) FX5UJ-24MT/ES (output side)



<Maximum output load current>

• Maximum load (resistance load) current of 1 output common terminal: 0.5 A or less
• Maximum load (resistance load) current of 3 output common terminal: 0.6 A or less
• Maximum load (resistance load) current of 4 output common terminal: 0.8 A or less

6.4 Replacement of the PLC

The main points to consider during replacement of the CPU module and extension modules are explained below.
For details of each item, check the reference pages in this document, and related manuals such as the PLC Hardware Manual and Programming Manual.

Device classification	Item	Operation content and points of attention	Reference page
CPU module	Reuse of the input/output wiring	Rewire the connection part of the terminal block type.	☞ Page 77
Other extension modules	Wiring to each module		
Verifying operation of the equipment	Operation and test of the PLC program	Operate the converted PLC program and hardware devices, and check and adjust the device function and operation timing. Be aware of the precautions described on the reference page for replacing the project, and check that the devices operate as they are designed.	—

7 REPLACEMENT FROM FX3U TO FX5UJ

7.1 Outline

The FX5UJ is equipped with features such as communication and high-speed input/output, and can easily be expanded with expansion boards and expansion adapters. Up to eight I/O modules and FX5 intelligent function modules (combined) can be connected.
The procedures and points for replacing an existing model with the FX5UJ are shown below. Use this information to consider replacing existing models.

Points to consider

- The "recommended substitute models" are described for individual FX3U and extension modules that can be replaced by iQ-F Series models. According to usage and system configuration (connection status of the extension modules), and cases when the number of I/O points actually used are small, other models than the described "recommended substitute models" may be suitable for replacement.
- As recommended substitute models for devices such as extension modules and expansion boards, devices that can be connected to the FX5UJ CPU module are listed.
- Contents that require special caution when replacing each model are described in "Special notes". Most recommended substitute models have various differences in the specifications other than those in Special notes" such as the dimensions becoming smaller than the current models. Therefore, when considering usage, please check not only the "Special notes" but also the details of various specifications such as the dimensions and power specifications in the manual.
- Based on the above conditions, "No recommended substitute models" is described for those without a recommended substitute model, but there are cases that can be replaced with an FX5UJ system configuration according to usage and system configuration. Check the necessary functions and features when considering the replacement with FX5UJ system configuration.

7.2 Replacement Procedure

The procedure for replacing the FX3U with the FX5UJ is shown below.
For details on replacing the FX3U with the FX5U, refer to ☞ Page 103 REPLACEMENT FROM FX3U TO FX5U.

1. Selection of the models

Select the substitute models.
☞ Page 86 Selection of Substitute Models

2. Conversion of the program

Convert the program used in FX3U to be able to use in FX5UJ.
☞ Page 94 Conversion of the Projects

3. Replacement to the substitute models

Replace the PLCs.
☞ Page 101 Replacement of the PLC

7.3 Selection of Substitute Models

Recommended substitute models

CPU modules (FX3U → FX5UJ)

The recommended substitute models of FX5UJ compatible with FX3U are introduced.

Please consider replacing the currently used CPU modules with the following recommended substitute models.

Current model	Recommended substitute model	Special notes
FX3U-16MR/ES	FX5UJ-24MR/ES	The number of I/O points increases in the recommended substitute models.
FX3U-16MT/ES	FX5UJ-24MT/ES	The number of I/O points increases in the recommended substitute models.
FX3U-16MT/ESS	FX5UJ-24MT/ESS	The number of I/O points increases in the recommended substitute models.
FX3U-32MR/ES	FX5UJ-40MR/ES	The number of I/O points increases in the recommended substitute models.
FX3U-32MS/ES	No recommended substitute models	—
FX3U-32MT/ES	FX5UJ-40MT/ES	The number of I/O points increases in the recommended substitute models.
FX3U-32MT/ESS	FX5UJ-40MT/ESS	The number of I/O points increases in the recommended substitute models.
FX3U-48MR/ES	FX5UJ-40MR/ES+FX5-8EYR/ES	—
FX3U-48MT/ES	FX5UJ-40MT/ES+FX5-8EYT/ES	—
FX3U-48MT/ESS	FX5UJ-40MT/ESS+FX5-8EYT/ESS	—
FX3U-64MR/ES	FX5UJ-60MR/ES+FX5-8EYR/ES	The number of I/O points increases in the recommended substitute models.
FX3U-64MS/ES	No recommended substitute models	—
FX3U-64MT/ES	FX5UJ-60MT/ES+FX5-8EYT/ES	The number of I/O points increases in the recommended substitute models.
FX3U-64MT/ESS	FX5UJ-60MT/ESS+FX5-8EYT/ESS	The number of I/O points increases in the recommended substitute models.
FX3U-80MR/ES	FX5UJ-60MR/ES+FX5-8EX/ES+FX5-16EYR/ES	The number of I/O points increases in the recommended substitute models.
FX3U-80MT/ES	FX5UJ-60MT/ES+FX5-8EX/ES+FX5-16EYT/ES	The number of I/O points increases in the recommended substitute models.
FX3U-80MT/ESS	FX5UJ-60MT/ESS+FX5-8EX/ES+FX5-16EYT/ESS	The number of I/O points increases in the recommended substitute models.
FX3U-128MR/ES	FX5UJ-60MR/ES+FX5-32ER/ES+FX5-32ER/ES+FX5-8EYR/ES	The number of I/O points increases in the recommended substitute models.
FX3U-128MT/ES	FX5UJ-60MT/ES+FX5-32ET/ES+FX5-32ET/ES+FX5-8EYT/ES	The number of I/O points increases in the recommended substitute models.
FX3U-128MT/ESS	FX5UJ-60MT/ESS+FX5-32ET/ESS+FX5-32ET/ESS+FX5-8EYT/ESS	The number of I/O points increases in the recommended substitute models.
FX3U-16MR/DS	FX5UJ-24MR/DS	The number of I/O points increases in the recommended substitute models.
FX3U-16MT/DS	FX5UJ-24MT/DS	The number of I/O points increases in the recommended substitute models.
FX3U-16MT/DSS	FX5UJ-24MT/DSS	The number of I/O points increases in the recommended substitute models.
FX3U-32MR/DS	FX5UJ-40MR/DS	The number of I/O points increases in the recommended substitute models.
FX3U-32MT/DS	FX5UJ-40MT/DS	The number of I/O points increases in the recommended substitute models.
FX3U-32MT/DSS	FX5UJ-40MT/DSS	The number of I/O points increases in the recommended substitute models.
FX3U-48MR/DS	FX5UJ-60MR/DS	The number of I/O points increases in the recommended substitute models.
FX3U-48MT/DS	FX5UJ-60MT/DS	The number of I/O points increases in the recommended substitute models.
FX3U-48MT/DSS	FX5UJ-60MT/DSS	The number of I/O points increases in the recommended substitute models.
FX3U-64MR/DS	FX5UJ-60MR/DS+FX5-8EYR/ES	The number of I/O points increases in the recommended substitute models.
FX3U-64MT/DS	FX5UJ-60MT/DS+FX5-8EYT/ES	The number of I/O points increases in the recommended substitute models.
FX3U-64MT/DSS	FX5UJ-60MT/DSS+FX5-8EYT/ESS	The number of I/O points increases in the recommended substitute models.
FX3U-80MR/DS	FX5UJ-60MR/DS+FX5-8EX/ES+FX5-16EYR/ES	The number of I/O points increases in the recommended substitute models.
FX3U-80MT/DS	FX5UJ-60MT/DS+FX5-8EX/ES+FX5-16EYT/ES	The number of I/O points increases in the recommended substitute models.
FX3U-80MT/DSS	FX5UJ-60MT/DSS+FX5-8EX/ES+FX5-16EYT/ESS	The number of I/O points increases in the recommended substitute models.
FX3U-32MR/UA1	No recommended substitute models	—
FX3U-64MR/UA1	No recommended substitute models	—

Extension devices (FX3U → FX5UJ)

The following list shows the extension devices that also need to be replaced when replacing the CPU module from FX3U to FX5UJ.

For products without a substitute model of the same function, check the contents described in the Special notes and please consider system reconfiguration.

■Extension I/O

Current model	Recommended substitute model	Special notes
FX2N-8ER	FX5-16ER/ES	The number of I/O points increases in the recommended substitute models.
FX2N-8ER-ES/UL	FX5-16ER/ES	The number of I/O points increases in the recommended substitute models.
FX2N-8EX	FX5-8EX/ES	—
FX2N-8EX-ES/UL	FX5-8EX/ES	—
FX2N-8EX-UA1/UL	No recommended substitute models	—
FX2N-16EX	FX5-16EX/ES	—
FX2N-16EX-ES/UL	FX5-16EX/ES	—
FX2N-16EX-C	FX5-CNV-IF+FX5-C16EX/D	Only a connector type module can be connected after (on the right side of) FX5-CNV-IF.
FX2N-16EXL-C	No recommended substitute models	—
FX2N-8EYR	FX5-8EYR/ES	—
FX2N-8EYR-ES/UL	FX5-8EYR/ES	—
FX2N-8EYR-S-ES/UL	No recommended substitute models	—
FX2N-8EYT	FX5-8EYT/ES	—
FX2N-8EYT-ESS/UL	FX5-8EYT/ESS	—
FX2N-8EYT-H	No recommended substitute models	—
FX2N-16EYR	FX5-16EYR/ES	—
FX2N-16EYR-ES/UL	FX5-16EYR/ES	—
FX2N-16EYT	FX5-16EYT/ES	—
FX2N-16EYT-ESS/UL	FX5-16EYT/ESS	—
FX2N-16EYT-C	FX5-CNV-IF+FX5-C16EYT/D	Only a connector type module can be connected after (on the right side of) FX5-CNV-IF.
FX2N-16EYS	No recommended substitute models	—
FX2N-32ER	FX5-32ER/ES	—
FX2N-32ER-ES/UL	FX5-32ER/ES	—
FX2N-32ET	FX5-32ET/ES	—
FX2N-32ET-ESS/UL	FX5-32ET/ESS	—
FX2N-32ES	No recommended substitute models	—
FX2N-48ER	FX5-32ER/ES+FX5-16ER/ES	—
FX2N-48ER-ES/UL	FX5-32ER/ES+FX5-16ER/ES	—
FX2N-48ET	FX5-32ET/ES+FX5-16ET/ES	—
FX2N-48ET-ESS/UL	FX5-32ET/ESS+FX5-16ET/ESS	—
FX2N-48ER-D	FX5-32ER/DS+FX5-16ER/ES	—
FX2N-48ER-DS	FX5-32ER/DS+FX5-16ER/ES	—
FX2N-48ET-D	FX5-32ET/DS+FX5-16ET/ES	—
FX2N-48ET-DSS	FX5-32ET/DSS+FX5-16ET/ESS	—
FX2N-48ER-UA1/UL	No recommended substitute models	—

■Extension device

Current model	Recommended substitute model	Special notes
FX3U-1PSU-5V	FX5-1PSU-5V	
FX2N-4AD-TC	FX5-4AD-TC-ADP	The wiring must be replaced from the screw terminal block to the European terminal block.
FX2N-4AD-PT	FX5-4AD-PT-ADP	The wiring must be replaced from the screw terminal block to the European terminal block.
FX2N-5A	FX5-4AD+FX5-4DA	The wiring must be replaced from the screw terminal block to the spring clamp terminal block.
FX2N-2AD	FX5-4AD	The wiring must be replaced from the screw terminal block to the spring clamp terminal block.
FX2N-4AD	FX5-4AD	The wiring must be replaced from the screw terminal block to the spring clamp terminal block.
FX2N-8AD	FX5-8AD	The wiring must be replaced from the screw terminal block to the spring clamp terminal block.
FX3U-4AD	FX5-4AD	The wiring must be replaced from the screw terminal block to the spring clamp terminal block.
FX2N-2LC	FX5-4LC	The wiring must be replaced from the screw terminal block to the spring clamp terminal block.
FX3U-4LC	FX5-4LC	The wiring must be replaced from the screw terminal block to the spring clamp terminal block.
FX2N-2DA	FX5-4DA	The wiring must be replaced from the screw terminal block to the spring clamp terminal block.
FX2N-4DA	FX5-4DA	The wiring must be replaced from the screw terminal block to the spring clamp terminal block.
FX3U-4DA	FX5-4DA	The wiring must be replaced from the screw terminal block to the spring clamp terminal block.
FX2N-1HC	FX5-16ET/ES-H	Select this model when the open collector 24VDC input and sink output are used. When 12VDC input or 5VDC input is used, there is no substitute model.
	FX5-16ET/ESS-H	Select this model when the open collector 24VDC input and source output are used. When 12VDC input or 5VDC input is used, there is no substitute model.
	FX5-2HC/ES	Select this model when the differential line driver input is used. The wiring must be replaced from the screw terminal block to the spring clamp terminal block. The FX5-2HC/ES does not support the source output.
FX3U-2HC	FX5-16ET/ES-H	Select this model when the open collector 24VDC input and sink output are used. The wiring must be replaced from the MIL connector to the screw terminal block. When 12VDC input or 5VDC input is used, there is no substitute model.
	FX5-16ET/ESS-H	Select this model when the open collector 24VDC input and source output are used. The wiring must be replaced from the MIL connector to the screw terminal block. When 12VDC input or 5VDC input is used, there is no substitute model.
	FX5-2HC/ES	Select this model when the differential line driver input is used. The wiring must be replaced from the MIL connector to the spring clamp terminal block. The FX5-2HC/ES does not support the source output.
FX2N-10PG	FX5-20PG-D	Replacement is necessary due to the difference of the connector type.
FX3U-1PG	FX5-16ET/ES-H	—
	FX5-20PG-P	Select this model when approximate S-curve acceleration/deceleration is used. The wiring must be replaced from the screw terminal block to the connector for external devices.
FX3U-20SSC-H	FX5-40SSC-S	Replacement is necessary due to the difference of the connector type for external input connection. One device per system.
FX2N-232IF	FX5-232-BD FX5-232ADP	—

Current model	Recommended substitute model	Special notes
FX2N-32CCL	FX5-CCL-MS	Set it as an intelligent device station when using the recommended substitute model.*1
FX2N-64CL-M	No recommended substitute models	—
FX3U-16CCL-M	FX5-CCL-MS	Set it as the master station when using the recommended substitute model.*1
FX3U-64CCL	FX5-CCL-MS	Set it as an intelligent device station when using the recommended substitute model.*1
FX3U-128ASL-M	FX5-ASL-M	—
FX3U-ENET	FX5-ENET	If the e-mail sending function is not needed, the FX5 CPU module also can be used as a replacement. If the e-mail sending function is required, use the module that is manufactured in or after April 2023.
FX3U-ENET-L	FX5-ENET	If the e-mail sending function is not needed, the FX5 CPU module also can be used as a replacement. If the e-mail sending function is required, use the module that is manufactured in or after April 2023.
FX3U-64DP-M	FX5-DP-M	—
FX3U-32DP	No recommended substitute models	—
FX3U-CAN	No recommended substitute models	—
FX3U-J1939	No recommended substitute models	—
FX2N-10GM	FX5-20PG-P	It cannot be used alone. Replacement is necessary due to the difference of the connector type.
FX2N-20GM	FX5-20PG-P	It cannot be used alone. Replacement is necessary due to the difference of the connector type.
FX2N-1RM-SET	No recommended substitute models	—
FX2N-1RM-SET-E		—
FX2N-32DP-IF-D	No recommended substitute models	—
FX2N-64DNET	No recommended substitute models	—

*1 FX5-CCL-MS can be used as a master station or an intelligent device station.

■Expansion board

Current model	Recommended substitute model	Special notes
FX3U-232-BD	FX5-232-BD	—
FX3U-485-BD	FX5-485-BD	—
FX3U-422-BD	FX5-422-BD-GOT	—
FX3U-CNV-BD	—	Not necessary for FX5UJ CPU module.
FX3U-8AV-BD	No recommended substitute models	—
FX3U-USB-BD	No recommended substitute models	USB port is built into the FX5UJ CPU module.

■Expansion adapter

Current model	Recommended substitute model	Special notes
FX3U-232ADP	FX5-232ADP	—
FX3U-232ADP-MB		—
FX3U-485ADP	FX5-485ADP	—
FX3U-485ADP-MB		—
FX3U-ENET-ADP	No recommended substitute models	Ethernet port is built into FX5UJ CPU module.
FX3U-3A-ADP	FX5-4A-ADP	—
FX3U-4AD-ADP	FX5-4AD-ADP	—
FX3U-4DA-ADP	FX5-4DA-ADP	—
FX3U-4AD-PT-ADP	FX5-4AD-PT-ADP	—
FX3U-4AD-PTW-ADP	FX5-4AD-PT-ADP	—
FX3U-4AD-PNK-ADP	No recommended substitute models	—
FX3U-4AD-TC-ADP	FX5-4AD-TC-ADP	—
FX3U-4HSX-ADP	No recommended substitute models	—
FX3U-2HSY-ADP	No recommended substitute models	—
FX3U-CF-ADP	No recommended substitute models	Substituted by an SD memory card.

■Option

Current model	Recommended substitute model	Special notes
FX3U-FLROM-16	No recommended substitute models	Substituted by an SD memory card.
FX3U-FLROM-64	No recommended substitute models	Substituted by an SD memory card.
FX3U-FLROM-64L	No recommended substitute models	Substituted by an SD memory card.
FX3U-FLROM-1M	No recommended substitute models	Substituted by an SD memory card.
FX3U-7DM	No recommended substitute models	Consider using the Web server function of the FX5UJ CPU module instead.
FX-30P	No recommended substitute models	—
FX0N-30EC	FX5-30EC	—
FX0N-65EC	FX5-65EC	—
FX2N-CNV-BC	FX5-CNV-BC	—

Extension devices that can be reused when the CPU module is replaced to FX5UJ

The following extension devices can be used even when the CPU module is replaced (FX3U → FX5UJ).

Terminal block
FX-16E-TB, FX-32E-TB, FX-16EX-A1-TB, FX-16EYR-TB, FX16EYS-TB, FX-16EYT-TB
FX-16E-TB/UL, FX-32E-TB/UL, FX-16EYR-ES-TB/UL, FX-16EYS-ES-TB/UL, FX-16EYT-ES-TB/UL, FX-16EYT-ESS-TB/UL

Battery

The FX5UJ CPU module cannot use a battery. However, the programs and devices of the FX5UJ CPU module are maintained in the built-in flash memory of the CPU.

Note that file registers (R) of the FX5UJ CPU module cannot be latched. (☞ Page 154 Device Replacement List)

Precautions regarding the hardware

Comparison of FX3U and FX5UJ and precautions for replacement

The following list shows precautions of the hardware. Check details in the manuals of each model when replacing existing models.

■Difference and precautions regarding the main hardware of FX3U and FX5UJ

Item	Difference		Precautions
	FX3U	FX5UJ	
Extension of FX2N and FX3U	Extension possible	Extension not possible	—
Input hardware filter (When the digital filter is 0) • High-speed counter • Input interruption function • Pulse catch function	X0 to X5: 5 μs X6 and X7: 50 μs X10 to X17: 200 μs	■FX5UJ-24M□ X0, X1, X3, and X4: • ON: 5 μs or less • OFF: 5 μs or less X2, X5, X6, and X7: • ON: 30 μs or less • OFF: 50 μs or less X10 to X15: • ON: 50 μs or less • OFF: 150 μs or less ■FX5UJ-40M□ and FX5UJ-60M□ X0, X1, X3, and X4: • ON: 5 μs or less • OFF: 5 μs or less X2, X5, X6, and X7: • ON: 30 μs or less • OFF: 50 μs or less X10 to X17: • ON: 50 μs or less • OFF: 150 μs or less	Noises that were not detected by FX3U may possibly be captured as an input. Take external measures against noise, or set an appropriate input response time parameter (initial value: 10ms).
Input signal current	X0 to X5: 6 mA X6 and X7: 7 mA X10 or later: 5 mA	X0 to X7: 5.3 mA X10 or later: 4 mA	The input signal current has been lowered, so it is necessary to check the specification of the external devices when replacing.

■External dimensions

There are some differences in the external dimensions of the FX3U and the FX5UJ. Be careful when replacing the modules.

• FX3U

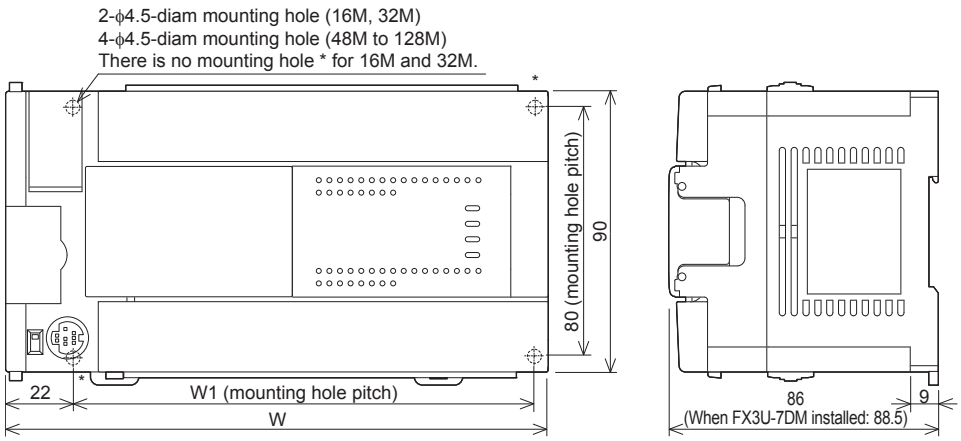

External color: Munsell 0.08GY/7.64/0.81
Top cover: Munsell N1.5
Unit: mm
The terminal block uses M3 terminal screws
35 mm width DIN rail can be installed

Model name	W: mm	W1: mm	Weight: kg
FX3U-16M□	130	103	Approx. 0.60
FX3U-32M□	150	123	Approx. 0.65
FX3U-48M□, FX3U-32MR/UA1	182	155	Approx. 0.85
FX3U-64M□	220	193	Approx. 1.00
FX3U-80M□, FX3U-64MR/UA1	285	258	Approx. 1.20
FX3U-128M□	350	323	Approx. 1.80

• FX5UJ

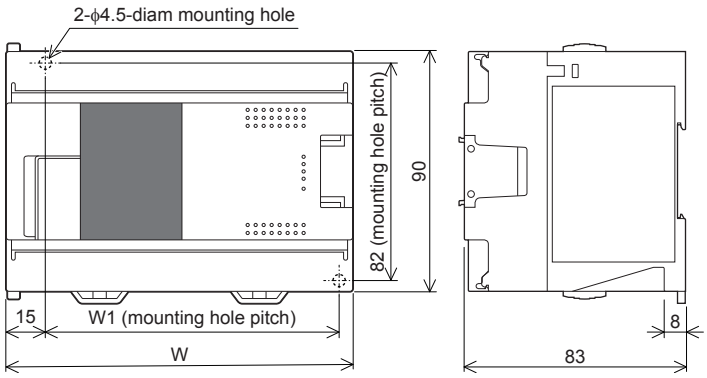

External color: Munsell 0.6B7.6/0.2
Unit: mm
The terminal block uses M3 terminal screws
35 mm width DIN rail can be installed

Model name	W: mm	W1: mm	Weight: kg
FX5UJ-24M□	95	76	Approx. 0.55
FX5UJ-40M□	130	111	Approx. 0.65
FX5UJ-60M□	175	156	Approx. 0.80

■Cable sizes for European type terminal block

Suitable wiring and tightening torque are described below.

Model name	Wire size for one wire	Wire size for two wires	Ferrule with insulation sleeve (wire size)	Tightening torque	Stripping dimensions of electric wire ends
FX3U-485-BD, FX3U-485ADP, FX3U-485ADP-MB	22 to 20 AWG	22 AWG	22 to 20 AWG	0.22 to 0.25 N·m	9 mm
FX5-485-BD, FX5-485ADP					
FX5-4AD-ADP, FX5-4DA-ADP, FX5-4A-ADP, FX5-4AD-PT-ADP, FX5-4AD-TC-ADP				0.20 N·m	

■Differences and precautions regarding installing the FX3U and FX5UJ

The pitch of the holes for installation in a control panel and the width differ between the FX3U and FX5UJ. When making a direct installation in a control panel, installation holes must be added. Also, because the terminal block shapes differ, one terminal block cannot be replaced with the other. (☞ Page 92 External dimensions)

■Differences and precautions regarding the drive power supply of the output section of the FX3U-16M□ and FX5UJ

• Output section power supply voltage consolidation

When replacing the FX3U-16M□ with the FX5UJ, the power supplies must be consolidated if a separate power supply has been installed with the common terminal of the FX3U-16M□.

• Maximum output load current

When the FX3U-16M□ is replaced with the FX5UJ, the maximum load current of the output section changes.

If separate power supplies have been installed with each common terminal, consolidate the power supplies.

(Example) FX3U-16MT/ES (output side)



<Number of outputs per common>

• 1 common terminal per output

<Maximum output load current>

• Maximum load (resistance load) current of 1 output common terminal: 0.5 A or less

(Example) FX5UJ-24MT/ES (output side)



<Number of outputs per common>

• 1 common terminal per 3 or 4 outputs

<Maximum output load current>

• Maximum load (resistance load) current of 1 output common terminal: 0.5 A or less

• Maximum load (resistance load) current of 3 output common terminal: 0.6 A or less

• Maximum load (resistance load) current of 4 output common terminal: 0.8 A or less

7.4 Conversion of the Projects

When converting FX3U projects to FX5UJ projects, use GX Works3.

After converting the projects, it may be necessary to adjust the programs (instructions, devices) and parameters.

Operation method for replacing projects

To convert FX3U projects to FX5UJ projects, perform operations in GX Works3.

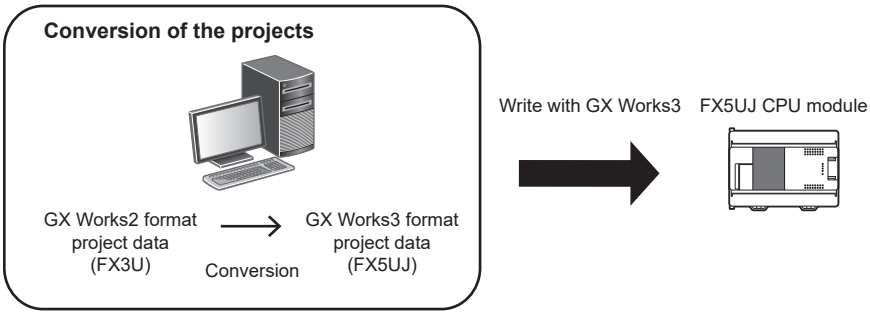

To convert the projects, install the engineering tool of the following version.

Engineering tool	Version	Remarks
GX Works3	1.065T or later*1	—
GX Works2	1.519R or later	Supplied with GX Works3.

*1 For GX Works3 version 1.063R and earlier, it is necessary to read FX5U projects beforehand and convert the projects to FX5UJ projects with model/operation mode change.

Precautions

- To read projects of GX Works2 using GX Works3, convert beforehand using GX Works2, and then read the projects. Even for projects converted using GX Works2, conversion may not be performed according to the state of the project. If there is an error in the program, operation will be canceled.
- To read projects of GX Works2 using GX Works3, delete the security (user Management, data security setting) of GX Works2 beforehand and then read the projects. If the security is set to the GX Works2 project, read out will be canceled.
- To read projects of GX Works2 using GX Works3, administrator rights are required.
- FX5UJ does not support the SFC program.

Operating procedure

1. Start up GX Works3.

2. Open the FX3U project.

Select [Project] ⇨ [Open Other Format File] ⇨ [GX Works2 Format] ⇨ [Open Project] ⇨ Project (***.gxw).

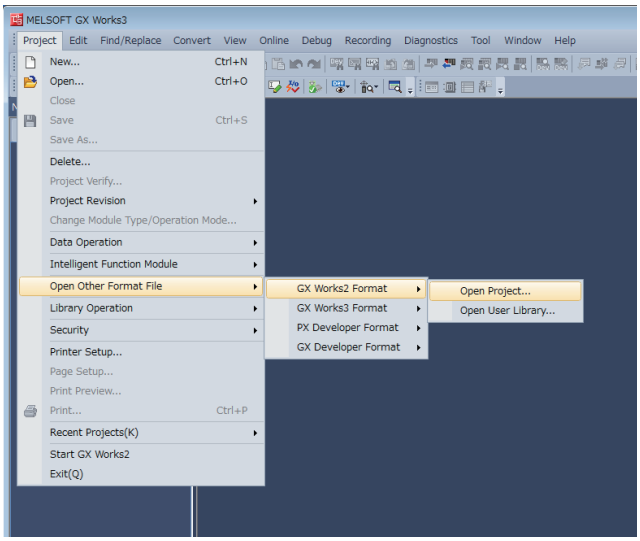

3. The following display is shown.

A selection screen of the following new module type is shown.

Select the new module type and press the [Execute] button.

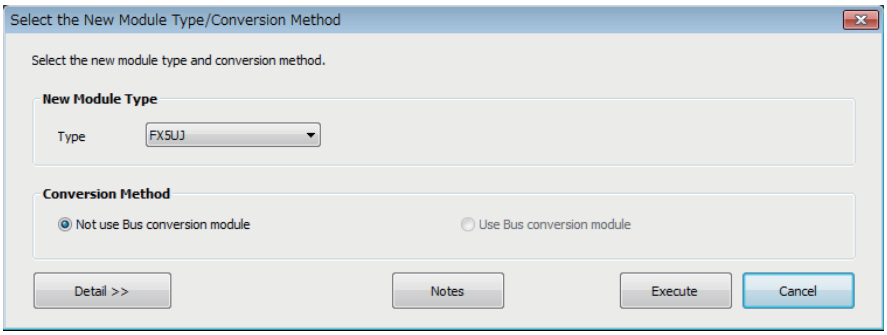

4. When conversion is completed, the following message is shown.

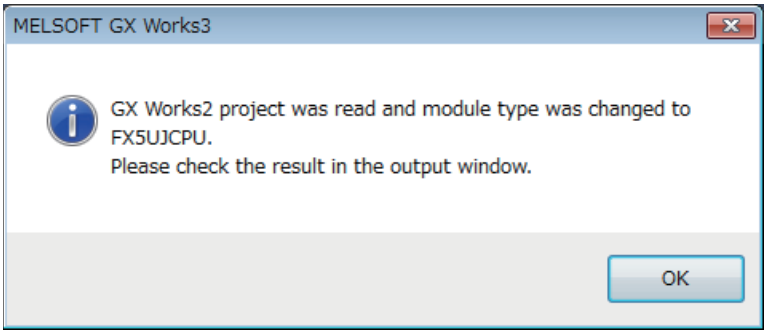

5. Check the contents of the model change result in the "Output window".

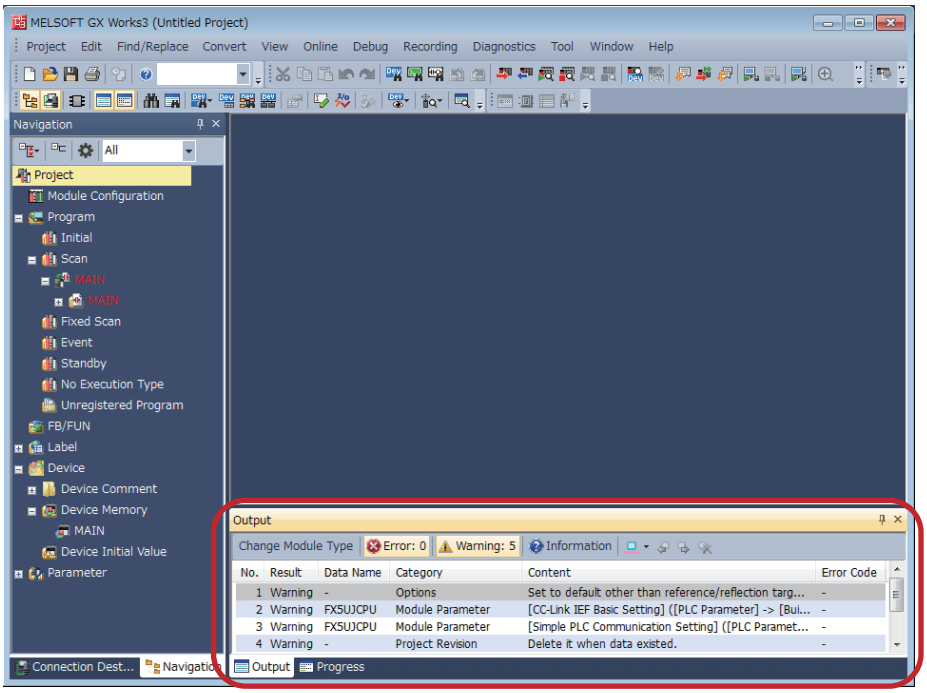

Precautions

- For GX Works3 versions 1.063R or earlier, when changing the model/operation mode from the FX5U to the FX5UJ, device memory entries, device initial values, and device comments that are outside the device range of the FX5UJ will be deleted.
- When projects are converted, the program instructions and devices may be changed. Check the contents of the project. Parameters other than the network parameter of CC-Link*1 will be deleted. Set the parameters if necessary.

*1 For the network parameters of CC-Link, refer to ☞ Page 97 Precautions when replacing the parameters.

6. Set the model name of the CPU for the system parameter.

[System Parameter] ⇨ [I/O Assignment Setting] ⇨ Model Name

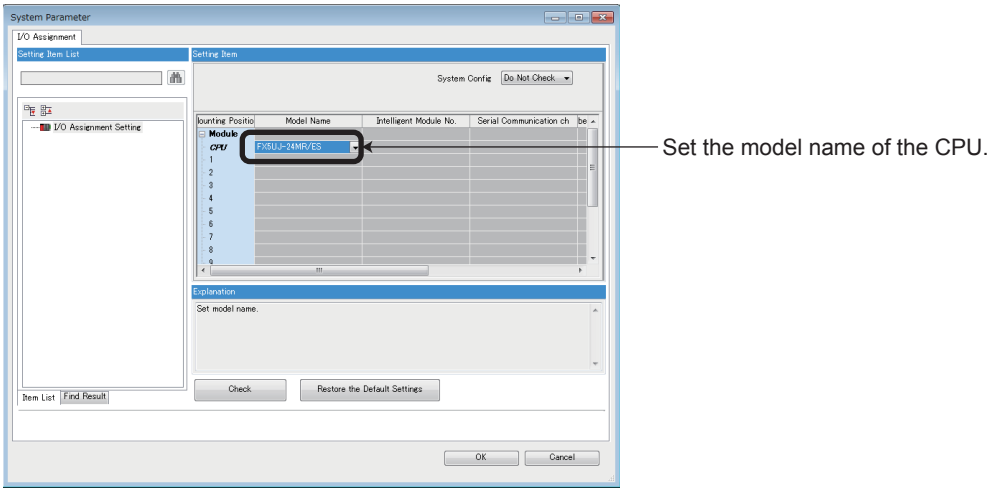

7. Perform conversion.

[Convert] ⇨ [Rebuild All]

Precautions when converting the projects

- When converting FX3U projects using GX Works3, be careful because the program (instructions and devices) may be changed.
- When converting projects, the number of steps may increase and writing to the FX5UJ may be impossible. Check the number of steps after replacement.
- Characters used for the label name in GX Works2 may correspond to reserved words or illegal characters in GX Works3. In that case, change the label name.

For precautions regarding instruction and device replacement, refer to ☞ Page 140 Instruction Replacement List.

Precautions when replacing the parameters

When converting FX3U projects to FX5UJ projects, the setting data of the parameters (PC parameters and network parameters) and special modules (intelligent function modules) will be deleted. Therefore, it is necessary to set the data with GX Works3 again.

Also, GX Works3 does not support the following parameters of the FX3U, so it is necessary to set these parameters with GX Works3 again.

- Network parameters (CC-Link)
- Intelligent function module parameter (AnyWireASLINK)

Precautions when replacing other functions

Precautions when using the high-speed counters

When the high-speed counters (C235 to C255) are used with the FX3U, they will not operate just by switching to the FX5UJ. It is necessary to set the FX3 Series compatible high-speed counters and change the program by the parameter. For the setting procedure, refer to the following.

Note that replacing high-speed counters C237, C240, C242, and C245 with FX3 Series compatible high-speed counters LC37, LC40, LC42, and LC45 will decrease the maximum frequency.

If there is a problem with the maximum frequency, consider setting counters to unused LC devices or switching to the FX5U.

■Parameter setting procedure of the FX3 series compatible high-speed counters

1. Select "Long Counter Specification" at the specification for High-speed counters.

[Parameter] ⇨ [FX5UJCPU] ⇨ [Module Parameter] ⇨ [High Speed I/O] ⇨ "Input Function" ⇨ "High Speed Counter" ⇨ "Detailed Setting" ⇨ "Other"

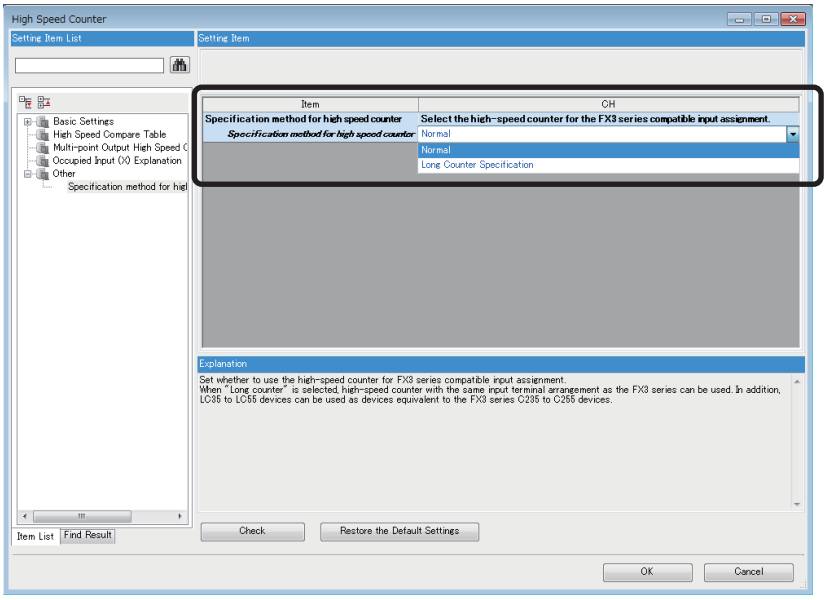

2. Set the function of the high-speed counters used with the FX3U.

Select the input comparison enable/disable of the counter device and preset input compatible with the FX3 Series, and select the control switch.

Item	CH1	CH2	
Use/Do Not Use Counter	**Set whether to use counter or not.**		
Use/Not Use	Enable	Disable	Disable
Counter device	**Select the high-speed counter for the FX3 series compatible input assignment.**		
Counter device	LC35 (Operation equivalent to C235)	LC36 (Operation equivalent to C236)	LC37 (Operatior
Operation Mode	**Set operation mode.**		
Operation Mode	Normal Mode	Normal Mode	Normal Mode
Pulse Input Mode	**Set pulse input mode.**		
Pulse Input Mode	1-Phase 1 Input (S/W Up/Down Switch)	1-Phase 1 Input (S/W Up/Down Switch)	1-Phase 1 Inpu
Preset Input	**Set preset input.**		
Preset Input Enable/Disable	Disable	Disable	Disable
Input logic	Positive Logic	Positive Logic	Positive Logic
Preset Value	0	0	0
Input Comparison Enable/Disable	Enable	Enable	Enable
Control Switch	Rising	Rising	Rising
Enable Input	**Set enable input.**		
Enable Input Enable/Disable	Disable	Disable	Disable
Input logic	Positive Logic	Positive Logic	Positive Logic
Ring Length Setting	**Set ring length.**		
Ring Length Enable/Disable	Disable	Disable	Disable
Ring Length	2147483648	2147483648	2147483648
Measurement Unit Time	**Set the measurement unit time (ms) for the pulse density measurement mode and rotation speed measurement mode.**		
Measurement Unit Time	1000 ms	1000 ms	1000 ms
Number of Pulses per Rotation	**Set the number of pulses per rotation when using the rotation speed measurement mode.**		
Number of Pulses per Rotation	1000 pulse	1000 pulse	1000 pulse

■Changing the Program

Change the high-speed counter program by referring to the following program example.

[Example of program]

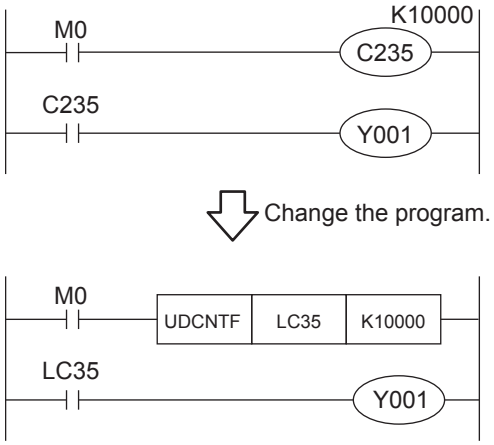

Precautions when using the routine timer

When the routine timer (T192 to T199) is used with the FX3U, it will not operate just by switching to the FX5UJ.
The routine timer must be set by the parameter. For the setting procedure, refer to the following.

■Parameter setting procedure of the routine timer

Set the use of the routine timer and the leading device number.

[Parameter] ⇨ [FX5UJCPU] ⇨ [CPU Parameter] ⇨ "Memory/Device Setting" ⇨ "Device/Label Memory Area Setting"

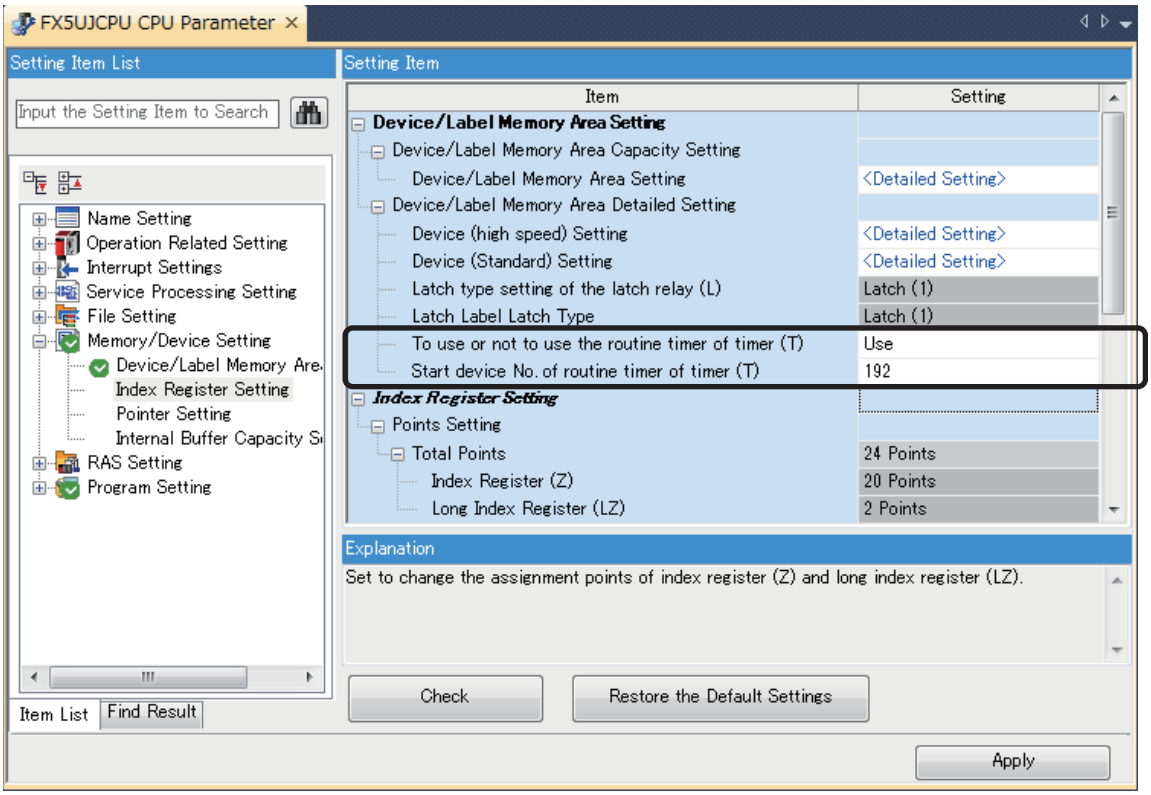

Serial communication channel assignment (RS-485, RS-232C)

When the FX3U is replaced with the FX5UJ, the communication channel assignments that can be used change.
Change the communication channels specified with instructions and parameter settings so that these channels match the specifications.

■FX3U communication channel assignment

A communication function expansion board and a special communication adapter can be used to connect up to two channels of serial ports.
The configurable combinations are shown below.

[Configuration example 1]
Using a communication function expansion board and a special communication adapter at the same time

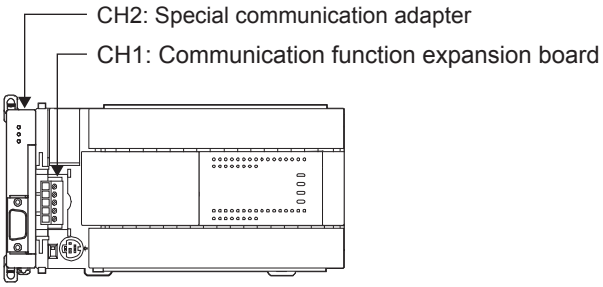

[Configuration example 2]
Using two special communication adapters

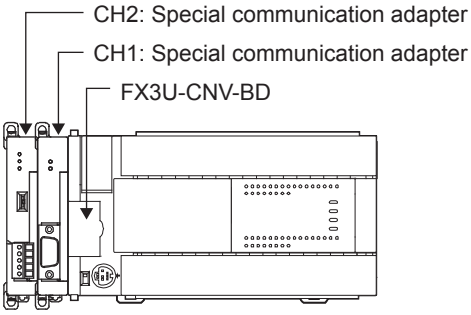

■FX5UJ communication channel assignment

A communication board and a communication adapter can be used to connect up to two channels of serial ports.
The communication channel assignments are fixed regardless of the system configuration.
The configurable combinations are shown below.

[Configuration example 1]
Using a communication board and a communication adapter at the same time

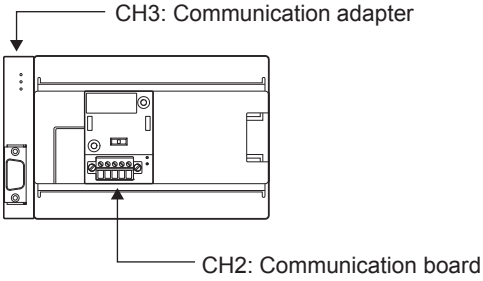

[Configuration example 2]
Using two communication adapters

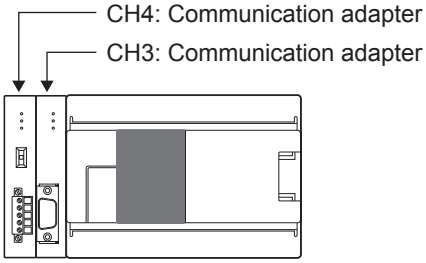

Ex.

When a communication function expansion board connected to the FX3U is replaced with an FX5UJ communication board, the communication channel changes from CH1 to CH2.

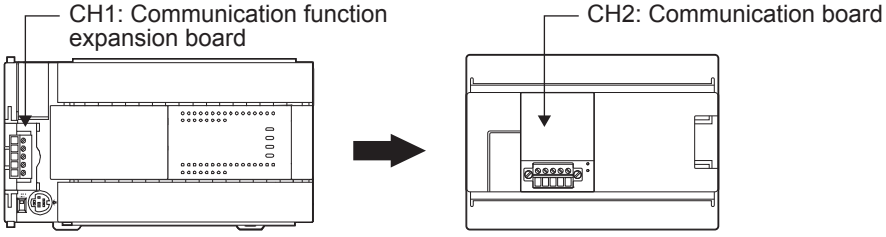

7.5 Replacement of the PLC

The main points to consider during replacement of the CPU module and extension modules are explained below.
For details of each item, check the reference pages in this document, and related manuals such as the PLC Hardware Manual and Programming Manual.

Device classification	Item	Operation content and points of attention	Reference page
CPU module	Reuse of the input/output wiring	Perform rewiring for the connection part of the terminal block type.	☞ Page 86
Other extension modules	Wiring to each module		
Verifying operation of the equipment	Operation and test of the PLC program	Operate the converted PLC program and hardware devices, and check and adjust the device function and operation timing. Be aware of the precautions described on the reference page for replacing the project, and check that the devices operate as they are designed.	☞ Page 94

7.6 Specifications Comparison

The following table lists the specifications comparison between the FX3U and FX5UJ.

Item		FX3U			FX5UJ		
Operation control system		Stored program repetitive operation system			Stored program repetitive operation system		
Input/output control system		Refresh system			Refresh system		
Programming language		Ladder diagram (LD) Structured text (ST) Function block diagram/ladder diagram (FBD/LD) Sequential function chart (SFC)			Ladder diagram (LD) Structured text (ST) Function block diagram/ladder diagram (FBD/LD) Sequential function chart (SFC)*1		
Program memory	Max. memory capacity/ type	64000 steps RAM memory (backed up by built-in lithium battery)			48000 steps Max. allowable write: 20,000 times		
	Writing function during running	Provided			Provided		
	Security function	Keyword/customer keyword function			Block password function/file password function		
Real-time clock	Clock function	Year, month, day, hour, minute, second, day of week (automatic leap year adjustment) Differences per month ±45 sec./25℃			Year, month, day, hour, minute, second, day of week (automatic leap year adjustment) Differences per month ±45 sec./25℃		
Processing speed	Basic instructions	LD X0: 65ns MOV D0 D1: 640ns			LD X0: 34ns MOV D0 D1: 34ns		
Number of input/output points	(1) Extension-combined number of input points	248 points	256 points or less (Total number of points for (1) and (2))	384 points or less (Total number of points for (1) to (3))	256 points or less	256 points or less (Total number of points for (1) and (2))	256 points or less (Total number of points for (1) to (3))
	(2) Extension-combined number of output points	248 points			256 points or less		
	(3) Remote I/O number of points	256 points or less*2 (CC-Link)			256 points or less (the total number of remote I/O points in CC-Link and AnyWireASLINK)		
		128 points or less (AnyWireASLINK)					
Input relay		248 points (X)			256 points (X)		
Output relay		248 points (Y)			256 points (Y)		
Auxiliary relay		7680 points (M)			7680 points (M)		
State		4096 points (S)			4096 points (S)		
Timer (on-delay timer)	Timer	502 points (T)			512 points (T)*3		
	Retentive timer	10 points (T)			16 points (ST)		
Counter	For 16 bits	200 points (C)			256 points (C)		
	For 32 bits	35 points (C)			64 points (LC)		

Item		FX3U	FX5UJ
High-speed counter	1-phase 1-count input (32 bits up/down)	C235	LC35
		C236	LC36
		C237	LC37
		C238	LC38
		C239	LC39
		C240	LC40
		C241	LC41
		C242	LC42
		C243	LC43
		C244	LC44
		C245	LC45
	1-phase 2-count input (32 bits up/down)	C246	LC46
		C247	LC47
		C248	LC48
		C249	LC49
		C250	LC50
	2-phase 2-count input (32 bits up/down)	C251	LC51
		C252	LC52
		C253	LC53
		C254	LC54
		C255	LC55
Data register		8000 points (D)	8000 points (D)
Index register	For 16 bits	16 points (V, Z)	20 points (Z)
	For 32 bits	—	2 points (LZ)
Extension register		32768 points (R)	32768 points (R)
Extension file register		32768 points (ER)	32768 points (ER) (stored in SD memory card)
Pointer		4096 points (P)	2048 points (P)
Interrupt pointer		15 points (I)	178 points (I)

*1 For the compatible versions, refer to the following.
MELSEC iQ-F FX5 User's Manual (Application)

*2 224 points or less when the FX2N-16CCL-M is used.

*3 This item indicates the total number of count of the 10ms timer, 100ms timer, and 1ms timer.

8 REPLACEMENT FROM FX3U TO FX5U

8.1 Outline

The FX5U is equipped with features such as analog functions, communication, and high-speed input/output, and can easily be expanded with expansion boards and expansion adapters. The high-speed system bus communication brings out the maximum performance of extension modules equipped with intelligent functions.
The procedures and points for replacing an existing model with the FX5U are shown below. Use this information to consider replacing existing models.

Points to consider

- The "recommended substitute models" are described for individual FX3U and extension modules that can be replaced by iQ-F Series models. According to usage and system configuration (connection status of the extension modules), and cases when the number of I/O points actually used are small, other models than the described "recommended substitute models" may be suitable for replacement.
- The recommended substitute models for extension modules, function expansion boards and built-in batteries are described with those that can be connected to the FX5U CPU module.
- Contents that require special caution when replacing each model are described in "Special notes". Most recommended substitute models have various differences in specifications other than those in "Special notes" such as the dimension becoming smaller than the current models. Therefore, when considering usage, please check not only the "Special notes" but also the details of each specification such as the dimension and power specifications in the manual.
- Based on the above conditions, "No recommended substitute models" is described for those without a recommended substitute model, but there are cases that can be replaced with an FX5U system configuration according to usage and system configuration. Check the necessary functions and features when considering the replacement with FX5U system configuration.

8.2 Replacement Procedure

The procedure for replacing the FX3U with the FX5U is shown below.
For details on replacing the FX3U with the FX5UJ, refer to ☞ Page 85 REPLACEMENT FROM FX3U TO FX5UJ.

1. Selection of the models

Select the substitute models.
☞ Page 104 Selection of Substitute Models

2. Conversion of the program

Convert the program used in FX3U to be able to use in FX5U.
☞ Page 112 Conversion of the Projects

3. Replacement to the substitute models

Replace the PLCs.
☞ Page 119 Replacement of the PLC

8.3 Selection of Substitute Models

Recommended substitute models

CPU modules (FX3U → FX5U)

The recommended substitute models of FX5U compatible with FX3U are introduced.

Please consider replacing the currently used CPU modules with the following recommended substitute models.

Current model	Recommended substitute model	Special notes
FX3U-16MR/ES	FX5U-32MR/ES	The number of I/O points increases in the recommended substitute models.
FX3U-16MT/ES	FX5U-32MT/ES	The number of I/O points increases in the recommended substitute models.
FX3U-16MT/ESS	FX5U-32MT/ESS	The number of I/O points increases in the recommended substitute models.
FX3U-32MR/ES	FX5U-32MR/ES	—
FX3U-32MS/ES	No recommended substitute models	—
FX3U-32MT/ES	FX5U-32MT/ES	—
FX3U-32MT/ESS	FX5U-32MT/ESS	—
FX3U-48MR/ES	FX5U-64MR/ES	The number of I/O points increases in the recommended substitute models.
FX3U-48MT/ES	FX5U-64MT/ES	The number of I/O points increases in the recommended substitute models.
FX3U-48MT/ESS	FX5U-64MT/ESS	The number of I/O points increases in the recommended substitute models.
FX3U-64MR/ES	FX5U-64MR/ES	—
FX3U-64MS/ES	No recommended substitute models	—
FX3U-64MT/ES	FX5U-64MT/ES	—
FX3U-64MT/ESS	FX5U-64MT/ESS	—
FX3U-80MR/ES	FX5U-80MR/ES	—
FX3U-80MT/ES	FX5U-80MT/ES	—
FX3U-80MT/ESS	FX5U-80MT/ESS	—
FX3U-128MR/ES	FX5U-80MR/ES+FX5-32ER/ES+FX5-16ER/ES	—
FX3U-128MT/ES	FX5U-80MT/ES+FX5-32ET/ES+FX5-16ET/ES	—
FX3U-128MT/ESS	FX5U-80MT/ESS+FX5-32ET/ESS+FX5-16ET/ESS	—
FX3U-16MR/DS	FX5U-32MR/DS	The number of I/O points increases in the recommended substitute models.
FX3U-16MT/DS	FX5U-32MT/DS	The number of I/O points increases in the recommended substitute models.
FX3U-16MT/DSS	FX5U-32MT/DSS	The number of I/O points increases in the recommended substitute models.
FX3U-32MR/DS	FX5U-32MR/DS	—
FX3U-32MT/DS	FX5U-32MT/DS	—
FX3U-32MT/DSS	FX5U-32MT/DSS	—
FX3U-48MR/DS	FX5U-64MR/DS	The number of I/O points increases in the recommended substitute models.
FX3U-48MT/DS	FX5U-64MT/DS	The number of I/O points increases in the recommended substitute models.
FX3U-48MT/DSS	FX5U-64MT/DSS	The number of I/O points increases in the recommended substitute models.
FX3U-64MR/DS	FX5U-64MR/DS	—
FX3U-64MT/DS	FX5U-64MT/DS	—
FX3U-64MT/DSS	FX5U-64MT/DSS	—
FX3U-80MR/DS	FX5U-80MR/DS	—
FX3U-80MT/DS	FX5U-80MT/DS	—
FX3U-80MT/DSS	FX5U-80MT/DSS	—
FX3U-32MR/UA1	No recommended substitute models	—
FX3U-64MR/UA1	No recommended substitute models	—

Extension devices (FX3U → FX5U)

The following list shows the extension devices that also need to be replaced when replacing the CPU module from FX3U to FX5U.

For products without a substitute model of the same function, check the contents described in the Special notes and please consider system reconfiguration.

■Extension I/O

Current model	Recommended substitute model	Special notes
FX2N-8ER	FX5-16ER/ES	The number of I/O points increases in the recommended substitute models.
FX2N-8ER-ES/UL	FX5-16ER/ES	The number of I/O points increases in the recommended substitute models.
FX2N-8EX	FX5-8EX/ES	—
FX2N-8EX-ES/UL	FX5-8EX/ES	—
FX2N-8EX-UA1/UL	No recommended substitute models	—
FX2N-16EX	FX5-16EX/ES	—
FX2N-16EX-ES/UL	FX5-16EX/ES	—
FX2N-16EX-C	FX5-CNV-IF+FX5-C16EX/D	Only a connector type module can be connected after (on the right side of) FX5-CNV-IF.
FX2N-16EXL-C	No recommended substitute models	—
FX2N-8EYR	FX5-8EYR/ES	—
FX2N-8EYR-ES/UL	FX5-8EYR/ES	—
FX2N-8EYR-S-ES/UL	No recommended substitute models	—
FX2N-8EYT	FX5-8EYT/ES	—
FX2N-8EYT-ESS/UL	FX5-8EYT/ESS	—
FX2N-8EYT-H	No recommended substitute models	—
FX2N-16EYR	FX5-16EYR/ES	—
FX2N-16EYR-ES/UL	FX5-16EYR/ES	—
FX2N-16EYT	FX5-16EYT/ES	—
FX2N-16EYT-ESS/UL	FX5-16EYT/ESS	—
FX2N-16EYT-C	FX5-CNV-IF+FX5-C16EYT/D	Only a connector type module can be connected after (on the right side of) FX5-CNV-IF.
FX2N-16EYS	No recommended substitute models	—
FX2N-32ER	FX5-32ER/ES	—
FX2N-32ER-ES/UL	FX5-32ER/ES	—
FX2N-32ET	FX5-32ET/ES	—
FX2N-32ET-ESS/UL	FX5-32ET/ESS	—
FX2N-32ES	No recommended substitute models	—
FX2N-48ER	FX5-32ER/ES+FX5-16ER/ES	—
FX2N-48ER-ES/UL	FX5-32ER/ES+FX5-16ER/ES	—
FX2N-48ET	FX5-32ET/ES+FX5-16ET/ES	—
FX2N-48ET-ESS/UL	FX5-32ET/ESS+FX5-16ET/ESS	—
FX2N-48ER-D	FX5-32ER/DS+FX5-16ER/ES	—
FX2N-48ER-DS	FX5-32ER/DS+FX5-16ER/ES	—
FX2N-48ET-D	FX5-32ET/DS+FX5-16ET/ES	—
FX2N-48ET-DSS	FX5-32ET/DSS+FX5-16ET/ESS	—
FX2N-48ER-UA1/UL	No recommended substitute models	—

■Extension device

Current model	Recommended substitute model	Special notes
FX3U-1PSU-5V	FX5-1PSU-5V	—
FX2N-4AD-TC	FX5-4AD-TC-ADP	The wiring must be replaced from the screw terminal block to the European terminal block.
FX2N-4AD-PT	FX5-4AD-PT-ADP	The wiring must be replaced from the screw terminal block to the European terminal block.
FX2N-5A	FX5-4AD+FX5-4DA	The wiring must be replaced from the screw terminal block to the spring clamp terminal block.
FX2N-2AD	FX5-4AD	The wiring must be replaced from the screw terminal block to the spring clamp terminal block.
FX2N-4AD	FX5-4AD	The wiring must be replaced from the screw terminal block to the spring clamp terminal block.
FX2N-8AD	FX5-8AD	The wiring must be replaced from the screw terminal block to the spring clamp terminal block.
FX3U-4AD	FX5-4AD	The wiring must be replaced from the screw terminal block to the spring clamp terminal block.
FX2N-2LC	FX5-4LC	The wiring must be replaced from the screw terminal block to the spring clamp terminal block.
FX3U-4LC	FX5-4LC	The wiring must be replaced from the screw terminal block to the spring clamp terminal block.
FX2N-2DA	FX5-4DA	The wiring must be replaced from the screw terminal block to the spring clamp terminal block.
FX2N-4DA	FX5-4DA	The wiring must be replaced from the screw terminal block to the spring clamp terminal block.
FX3U-4DA	FX5-4DA	The wiring must be replaced from the screw terminal block to the spring clamp terminal block.
FX2N-1HC	FX5-16ET/ES-H	Select this model when the open collector 24VDC input and sink output are used. When 12VDC input or 5VDC input is used, there is no substitute model.
	FX5-16ET/ESS-H	Select this model when the open collector 24VDC input and source output are used. When 12VDC input or 5VDC input is used, there is no substitute model.
	FX5-2HC/ES	Select this model when the differential line driver input is used. The wiring must be replaced from the screw terminal block to the spring clamp terminal block. The FX5-2HC/ES does not support the source output.
FX3U-2HC	FX5-16ET/ES-H	Select this model when the open collector 24VDC input and sink output are used. The wiring must be replaced from the MIL connector to the screw terminal block. When 12VDC input or 5VDC input is used, there is no substitute model.
	FX5-16ET/ESS-H	Select this model when the open collector 24VDC input and source output are used. The wiring must be replaced from the MIL connector to the screw terminal block. When 12VDC input or 5VDC input is used, there is no substitute model.
	FX5-2HC/ES	Select this model when the differential line driver input is used. The wiring must be replaced from the MIL connector to the spring clamp terminal block. The FX5-2HC/ES does not support the source output.
FX2N-10PG	FX5-20PG-D	Replacement is necessary due to the difference of the connector type.
FX3U-1PG	FX5-16ET/ES-H	—
	FX5-20PG-P	Select this model when approximate S-curve acceleration/deceleration is used. The wiring must be replaced from the screw terminal block to the connector for external devices.
FX3U-20SSC-H	FX5-40SSC-S	Replacement is necessary due to the difference of the connector type for external input connection. One module per system.
FX2N-232IF	FX5-232-BD FX5-232ADP	—

Current model	Recommended substitute model	Special notes
FX2N-32CCL	FX5-CCL-MS	Set it as an intelligent device station when using the recommended substitute model.*1
FX2N-64CL-M	No recommended substitute models	—
FX3U-16CCL-M	FX5-CCL-MS	Set it as the master station when using the recommended substitute model.*1
FX3U-64CCL	FX5-CCL-MS	Set it as an intelligent device station when using the recommended substitute model.*1
FX3U-128ASL-M	FX5-ASL-M	—
FX3U-ENET	FX5-ENET	If the e-mail sending function is not needed, the FX5 CPU module also can be used as a replacement. If the e-mail sending function is required, use the module that is manufactured in or after April 2023.
FX3U-ENET	FX5-ENET	If the e-mail sending function is not needed, the FX5 CPU module also can be used as a replacement. If the e-mail sending function is required, use the module that is manufactured in or after April 2023.
FX3U-64DP-M	FX5-DP-M	—
FX3U-32DP	No recommended substitute models	—
FX3U-CAN	No recommended substitute models	—
FX3U-J1939	No recommended substitute models	—
FX2N-10GM	FX5-20PG-P	It cannot be used alone. Replacement is necessary due to the difference of the connector type.
FX2N-20GM	FX5-20PG-P	It cannot be used alone. Replacement is necessary due to the difference of the connector type.
FX2N-1RM-SET	No recommended substitute models	—
FX2N-1RM-SET-E		—
FX2N-32DP-IF-D	No recommended substitute models	—
FX2N-64DNET	No recommended substitute models	—

*1 FX5-CCL-MS can be used as a master station or an intelligent device station.

■Expansion board

Current model	Recommended substitute model	Special notes
FX3U-232-BD	FX5-232-BD	—
FX3U-485-BD	FX5-485-BD	—
FX3U-422-BD	FX5-422-BD-GOT	—
FX3U-CNV-BD	—	Not necessary for FX5U CPU module.
FX3U-8AV-BD	No recommended substitute models	—
FX3U-USB-BD	No recommended substitute models	—

■Expansion adapter

Current model	Recommended substitute model	Special notes
FX3U-232ADP	FX5-232ADP	—
FX3U-232ADP-MB		—
FX3U-485ADP	FX5-485ADP	—
FX3U-485ADP-MB		—
FX3U-ENET-ADP	No recommended substitute models	Ethernet port is built into FX5U CPU module.
FX3U-3A-ADP	FX5-4A-ADP	—
FX3U-4AD-ADP	FX5-4AD-ADP	—
FX3U-4DA-ADP	FX5-4DA-ADP	—
FX3U-4AD-PT-ADP	FX5-4AD-PT-ADP	—
FX3U-4AD-PTW-ADP	FX5-4AD-PT-ADP	—
FX3U-4AD-PNK-ADP	No recommended substitute models	—
FX3U-4AD-TC-ADP	FX5-4AD-TC-ADP	—
FX3U-4HSX-ADP	No recommended substitute models	—
FX3U-2HSY-ADP	No recommended substitute models	—
FX3U-CF-ADP	No recommended substitute models	Substituted by an SD memory card.

■Option

Current model	Recommended substitute model	Special notes
FX3U-FLROM-16	No recommended substitute models	Substituted by an SD memory card.
FX3U-FLROM-64	No recommended substitute models	Substituted by an SD memory card.
FX3U-FLROM-64L	No recommended substitute models	Substituted by an SD memory card.
FX3U-FLROM-1M	No recommended substitute models	Substituted by an SD memory card.
FX3U-7DM	No recommended substitute models	Consider using the Web server function of the FX5U CPU module instead.
FX-30P	No recommended substitute models	—
FX0N-30EC	FX5-30EC	—
FX0N-65EC	FX5-65EC	—
FX2N-CNV-BC	FX5-CNV-BC	—

Extension devices that can be reused when the CPU module is replaced to FX5U

The following extension devices can be used by connecting a bus conversion module (FX5-CNV-BUS) even when the CPU module is replaced (FX3U → FX5U).

Extension power supply	Analog	Positioning	High-speed counter	Network	Terminal block*1	
FX3U-1PSU-5V	FX3U-4AD FX3U-4DA FX3U-4LC	FX3U-1PG	FX3U-2HC	FX3U-16CCL-M*2 FX3U-64CCL FX3U-128ASL-M*2 FX3U-32DP	FX-16E-TB FX-32E-TB FX-16EX-A1-TB FX-16EYR-TB FX-16EYS-TB FX-16EYT-TB	FX-16E-TB/UL FX-32E-TB/UL FX-16EYR-ES-TB/UL FX-16EYS-ES-TB/UL FX-16EYT-ES-TB/UL FX-16EYT-ESS-TB/UL

*1 The terminal block can be used without connecting a bus conversion module.
*2 It is necessary to set the parameter with the PLC program.

Battery

The battery (FX3U-32BL) used in FX3U can also be used with FX5U.

Precautions regarding the hardware

Comparison of FX3U and FX5U and precautions for replacement

The following list shows precautions of the hardware. Check details in the manuals of each model when replacing.

■Difference and precautions regarding the main hardware of FX3U and FX5U

Item	Difference		Precautions
	FX3U	FX5U	
Extension of FX2N and FX3U	Extension possible	Extension is possible only for certain modules. FX5-CNV-BUS is required for extension.	Connection is not possible for some intelligent modules of FX3U.
Input hardware filter (When the digital filter is 0) • High-speed counter • Input interruption function • Pulse catch function	X0 to X5: 5 μs X6 and X7: 50 μs X10 to X17: 200 μs	■In the case of FX5U-32M X0 to X5: • ON: 2.5 μs or less • OFF: 2.5 μs or less X6 to X17: • ON: 30 μs or less • OFF: 50 μs or less ■In the case of FX5U-64M and FX5U-80M X0 to X7: • ON: 2.5 μs or less • OFF: 2.5 μs or less X10 to X17: • ON: 30 μs or less • OFF: 50 μs or less X20 and later: • ON: 50 μs or less • OFF: 150 μs or less	Noises that were not detected by FX3U may possibly be captured as an input. Take external measures against noise, or set an appropriate input response time parameter (initial value: 10ms).
Input signal current	X0 to X5: 6 mA X6 and X7: 7 mA X10 or later: 5 mA	X0 to X17: 5.3 mA X20 or later: 4 mA	The input signal current has been lowered, so it is necessary to check the specification of the external devices when replacing.

■External dimensions

There are some differences in the external dimensions of the FX3U and the FX5U. Be careful when replacing the modules.

• FX3U

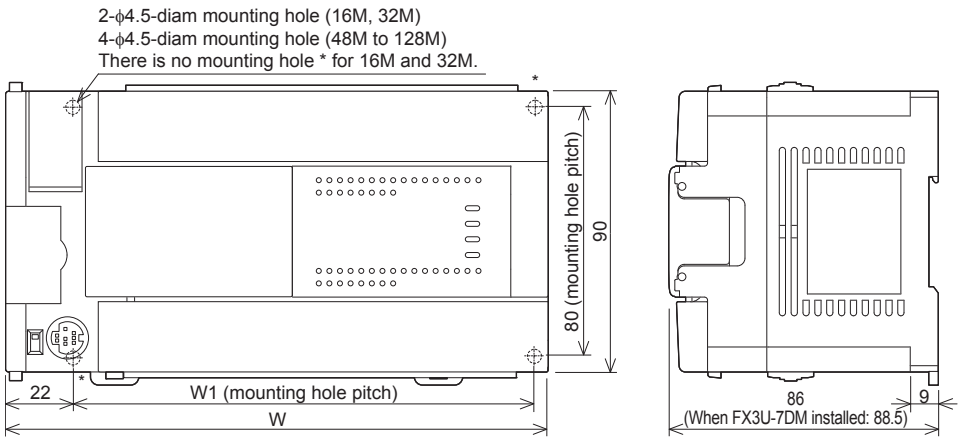

External color: Munsell 0.08GY/7.64/0.81
Top cover: Munsell N1.5
Unit: mm
The terminal block uses M3 terminal screws
35 mm width DIN rail can be installed

Model name	W: mm	W1: mm	Weight: kg
FX3U-16M□	130	103	Approx. 0.60
FX3U-32M□	150	123	Approx. 0.65
FX3U-48M□, FX3U-32MR/UA1	182	155	Approx. 0.85
FX3U-64M□	220	193	Approx. 1.00
FX3U-80M□, FX3U-64MR/UA1	285	258	Approx. 1.20
FX3U-128M□	350	323	Approx. 1.80

• FX5U

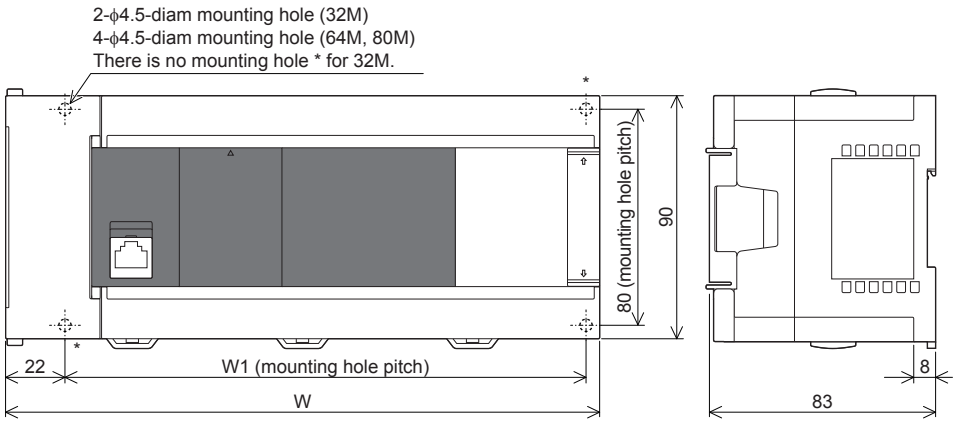

External color: Munsell 0.6B7.6/0.2
Unit: mm
The terminal block uses M3 terminal screws
35 mm width DIN rail can be installed

Model name	W: mm	W1: mm	Weight: kg
FX5U-32M□	150	123	Approx. 0.70
FX5U-64M□	220	193	Approx. 1.00
FX5U-80M□	285	258	Approx. 1.20

■Cable sizes for European type terminal block

Suitable wiring and tightening torque are described below.

Model name	Wire size for one wire	Wire size for two wires	Ferrule with insulation sleeve (wire size)	Tightening torque	Stripping dimensions of electric wire ends
Built-in RS-485 communication terminal block Built-in analog I/O terminal block	24 to 20 AWG	24 AWG	24 to 20 AWG	0.22 to 0.25 N·m	5 mm
FX3U-485-BD, FX3U-485ADP, FX3U-485ADP-MB	22 to 20 AWG	22 AWG	22 to 20 AWG	0.22 to 0.25 N·m	9 mm
FX5-485-BD, FX5-485ADP					
FX5-4AD-ADP, FX5-4DA-ADP, FX5-4A-ADP, FX5-4AD-PT-ADP, FX5-4AD-TC-ADP				0.20 N·m	

■Differences and precautions regarding installing the FX3U and FX5U

The FX3U and FX5U CPU modules have the same vertical and horizontal sizes, but the pitch of the installation holes in a horizontal control panel will differ depending on the model name of the FX5U switched to. When making a direct installation in a control panel, installation holes must be added. Also, because the terminal block shapes differ, one terminal block cannot be replaced with the other. (☞ Page 110 External dimensions)

■Differences and precautions regarding the drive power supply of the output section of the FX3U-16M□ and FX5U

• Output section power supply consolidation

When replacing the FX3U-16M□ with the FX5U, the power supplies must be consolidated if a separate power supply has been installed with the common terminal of the FX3U-16M□.

• Maximum output load current

When the FX3U-16M□ is replaced with the FX5U, the maximum load current of the output section changes.
If separate power supplies have been installed with each common terminal, consolidate the power supplies.

(Example) FX3U-16MT/ES (output side)



<Number of outputs per common>
• 1 common terminal per output
<Maximum output load current>
• Maximum load (resistance load) current of 1 output common terminal: 0.5 A or less

(Example) FX5U-32MT/ES (output side)

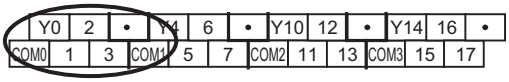

<Number of outputs per common>
• 1 common terminal per 3 or 4 outputs
<Maximum output load current>
• Maximum load (resistance load) current of 4 output common terminal: 0.8 A or less
• Maximum load (resistance load) current of 8 output common terminal: 1.6 A or less

8.4 Conversion of the Projects

When converting FX3U projects to FX5U projects, use GX Works3.

After converting the projects, it may be necessary to adjust the programs (instructions, devices) and parameters.

For the replacement of the SFC program, refer to ☞ Page 163 Conversion of the SFC Program.

Operation method for replacing projects

To convert FX3U projects to FX5U projects, perform operations in GX Works3.

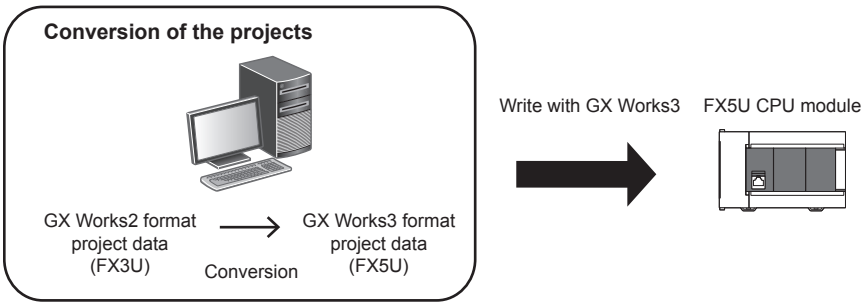

To convert the projects, install the engineering tool of the following version.

Engineering tool	Version	Remarks
GX Works3	1.020W or later	—
GX Works2	1.519R or later	Supplied with GX Works3.

Precautions

- To read projects of GX Works2 using GX Works3, convert beforehand using GX Works2, and then read the projects. Even for projects converted using GX Works2, conversion may not be performed according to the state of the project. If there is an error in the program, operation will be canceled.
- To read projects of GX Works2 using GX Works3, delete the security (user management, data security setting) of GX Works2 beforehand and then read the projects. If the security is set to the GX Works2 project, read out will be canceled.
- To read projects of GX Works2 using GX Works3, administrator rights are required.

Operating procedure

1. Start up GX Works3.

2. Open the FX3U project.

Select [Project] ⇨ [Open Other Format File] ⇨ [GX Works2 Format] ⇨ [Open Project] ⇨ Project (***.gxw).

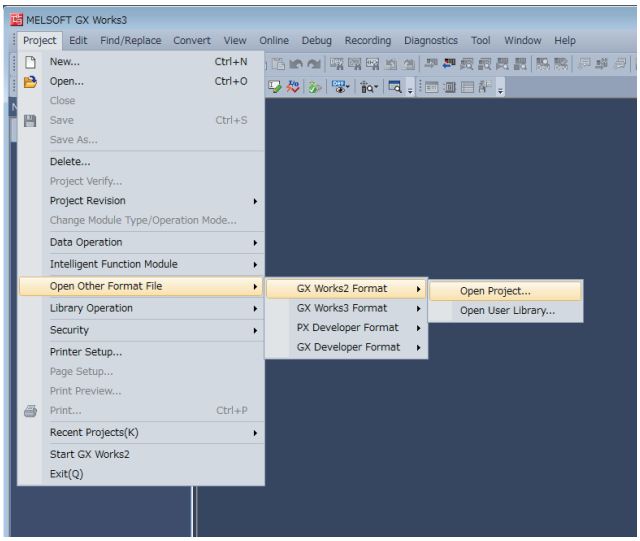

3. The following display is shown.

A selection screen of the following new module type and conversion method is shown.

Select the new module type and conversion method, and press the [Execute] button.

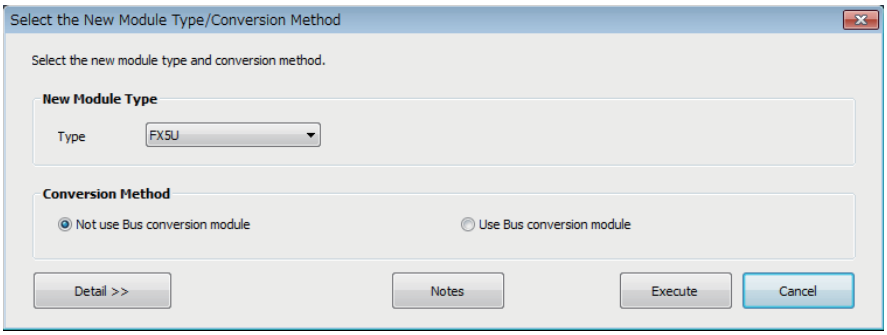

Point

- The display contents may vary depending on the version of the software.
- Precautions for the converted project are displayed. Please read carefully through the contents before use.

4. When conversion is completed, the following message is shown.

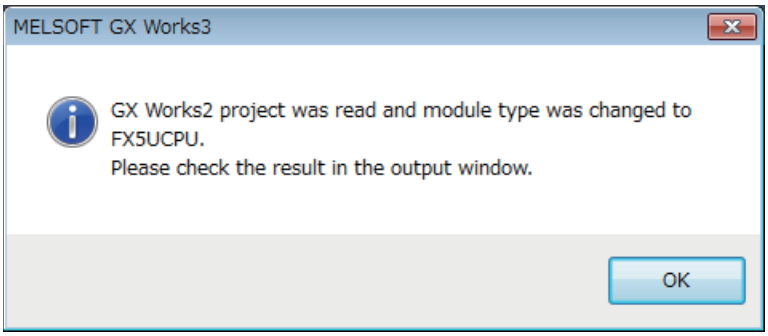

5. Check the contents of the model change result in the "Output window".

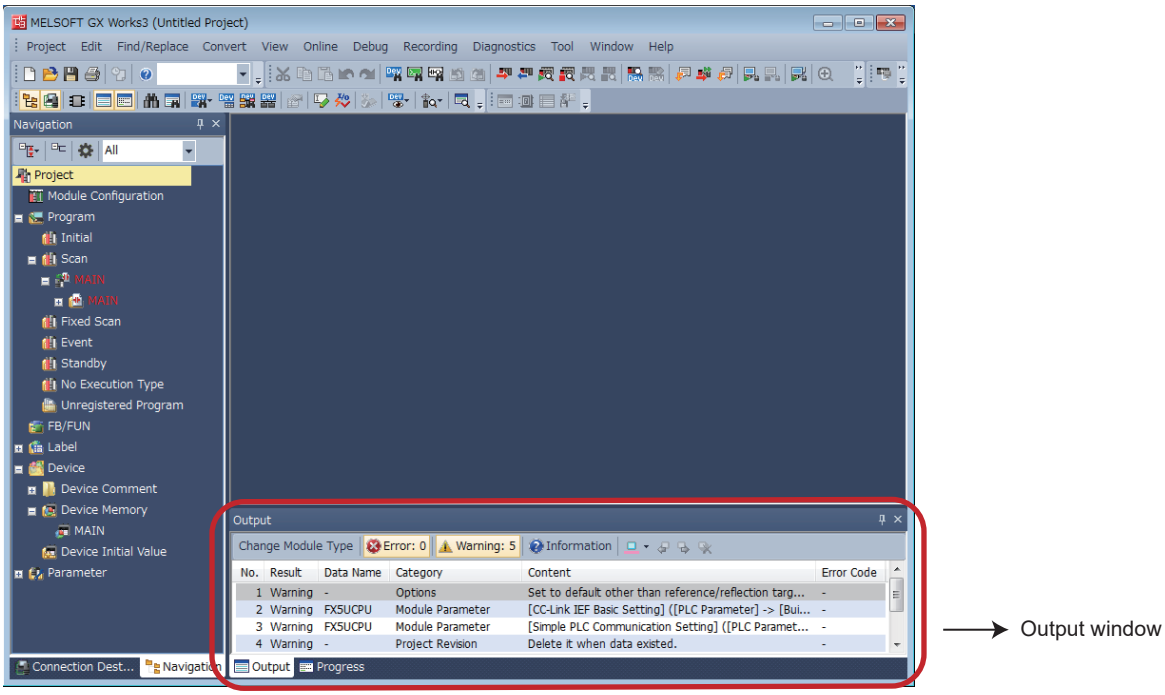

Precautions

- For GX Works3 versions earlier than 1.025B, the program must be changed from "No Execution Type". (Changing to "Scan" or other settings)
- When projects are converted, the program instructions and devices may be changed. Check the contents of the project. Parameters other than the network parameter of CC-Link*1 will be deleted. Set the parameters if necessary.

*1 For the network parameters of CC-Link, refer to ☞ Page 115 Precautions when replacing the parameters.

6. Set the model name of the CPU for the system parameter.

[System Parameter] ⇨ [I/O Assignment Setting] ⇨ Model Name

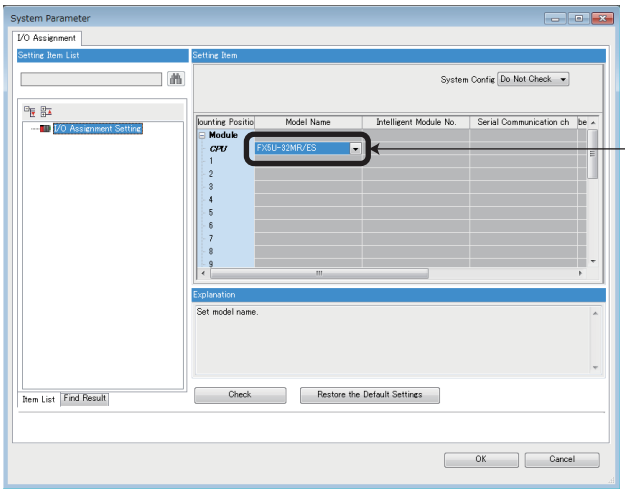

7. Perform conversion.

[Convert] ⇨ [Rebuild All]

Precautions when converting the projects

- When converting FX3U projects using GX Works3, be careful because the program (instructions and devices) may be changed.
- When converting projects, the number of steps may increase and writing to the FX5U may be impossible. Check the number of steps after replacement.
- Characters used for the label name in GX Works2 may correspond to reserved words or illegal characters in GX Works3. In that case, change the label name.

For precautions regarding instruction and device replacement, refer to ☞ Page 140 Instruction Replacement List.

Precautions when replacing the parameters

When converting FX3U projects to FX5U projects, the setting data of the parameters (PC parameters and network parameters) and special modules (intelligent function modules) will be deleted. Therefore, it is necessary to set the data with GX Works3 again.

Also, GX Works3 does not support the following parameters of the FX3U, so it is necessary to set these parameters with GX Works3 again.

- Network parameter (CC-Link)
- Intelligent function module parameter (AnyWireASLINK)

Precautions when replacing other functions

Precautions when using the high-speed counters

When the high-speed counters (C235 to C255) are used with the FX3U, they will not operate just by switching to the FX5U. It is necessary to set the FX3 series compatible high-speed counters and change the program by the parameter. For the setting procedure, refer to the following.

■Parameter setting procedure of the FX3 series compatible high-speed counters

1. Select "Long Counter Specification" at the specification for high-speed counters.

[Parameter] ⇨ [FX5UCPU] ⇨ [Module Parameter] ⇨ [High Speed I/O] ⇨ "Input Function" ⇨ "High Speed Counter" ⇨ "Detailed Setting" ⇨ "Other"

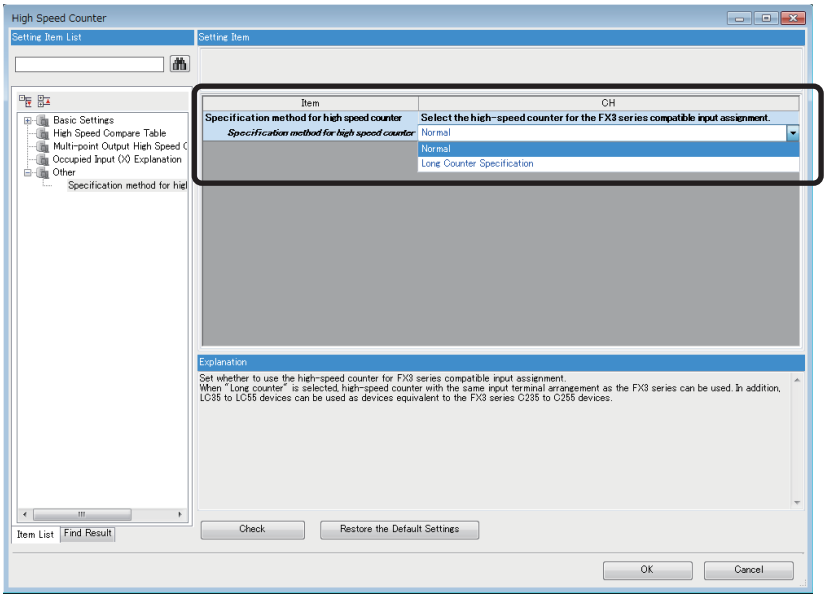

2. Set the function of the high-speed counters used with the FX3U.

Select the input comparison enable/disable of the counter device and preset input compatible with the FX3 Series, and select the control switch.

Item	CH1	CH2	
Use/Do Not Use Counter	**Set whether to use counter or not.**		
Use/Not Use	Enable	Disable	Disable
Counter device	**Select the high-speed counter for the FX3 series compatible input assignment.**		
Counter device	LC35 (Operation equivalent to C235)	LC36 (Operation equivalent to C236)	LC37 (Operatic
Operation Mode	**Set operation mode.**		
Operation Mode	Normal Mode	Normal Mode	Normal Mode
Pulse Input Mode	**Set pulse input mode.**		
Pulse Input Mode	1-Phase 1 Input (S/W Up/Down Switch)	1-Phase 1 Input (S/W Up/Down Switch)	1-Phase 1 Inpu
Preset Input	**Set preset input.**		
Preset Input Enable/Disable	Disable	Disable	Disable
Input logic	Positive Logic	Positive Logic	Positive Logic
Preset Value	0	0	0
Input Comparison Enable/Disable	Enable	Enable	Enable
Control Switch	Rising	Rising	Rising
Enable Input	**Set enable input.**		
Enable Input Enable/Disable	Disable	Disable	Disable
Input logic	Positive Logic	Positive Logic	Positive Logic
Ring Length Setting	**Set ring length.**		
Ring Length Enable/Disable	Disable	Disable	Disable
Ring Length	2147483648	2147483648	2147483648
Measurement Unit Time	**Set the measurement unit time (ms) for the pulse density measurement mode and rotation speed measurement mode.**		
Measurement Unit Time	1000 ms	1000 ms	1000 ms
Number of Pulses per Rotation	**Set the number of pulses per rotation when using the rotation speed measurement mode.**		
Number of Pulses per Rotation	1000 pulse	1000 pulse	1000 pulse

■Changing the program

Change the high-speed counter program by referring to the following program example.

[Example of program]

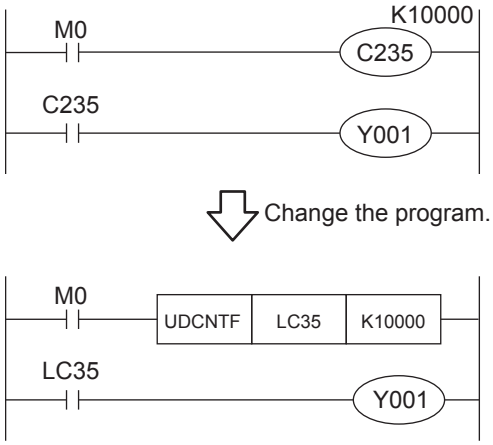

Precautions when using the routine timer

When the routine timer (T192 to T199) is used with the FX3U, it will not operate just by switching to the FX5U.

The routine timer must be set by the parameter. For the setting procedure, refer to the following.

■Parameter setting procedure of the routine timer

Set the use of the routine timer and the leading device number.

[Parameter] ⇨ [FX5UCPU] ⇨ [CPU Parameter] ⇨ "Memory/Device Setting" ⇨ "Device/Label Memory Area Setting"

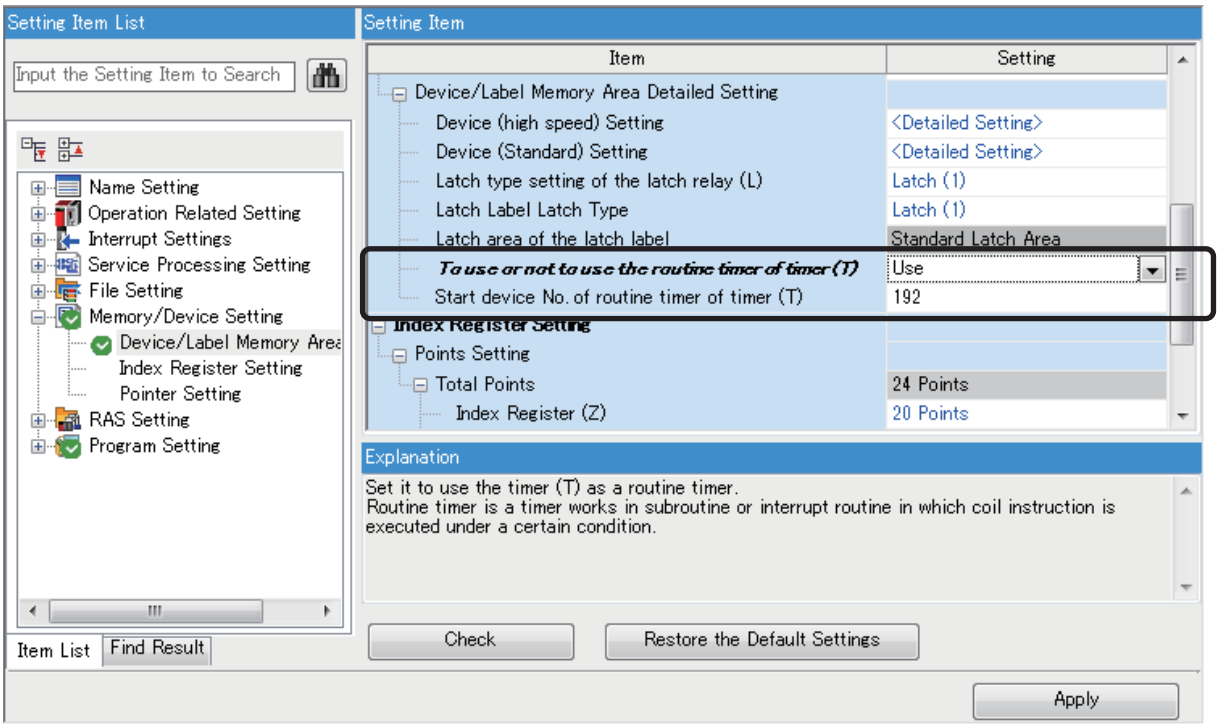

Serial communication channel assignment (RS-485, RS-232C)

When the FX3U is replaced with the FX5U, the communication channel assignments that can be used change.
Change the communication channels specified with instructions and parameter settings so that these channels match the specifications.

■FX3U communication channel assignment

A communication function expansion board and a special communication adapter can be used to connect up to two channels of serial ports.
The configurable combinations are shown below.

[Configuration example 1]
Using a communication function expansion board and a special communication adapter at the same time

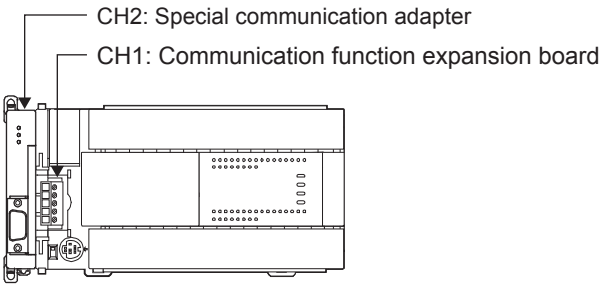

[Configuration example 2]
Using two special communication adapters

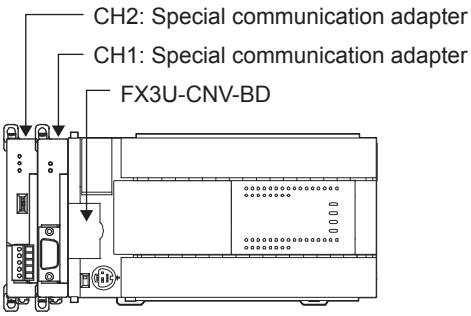

■FX5U communication channel assignment

The built-in RS-485 port, a communication board, and a communication adapter can be used to connect up to four channels of serial ports.
The communication channel assignments are fixed regardless of the system configuration.

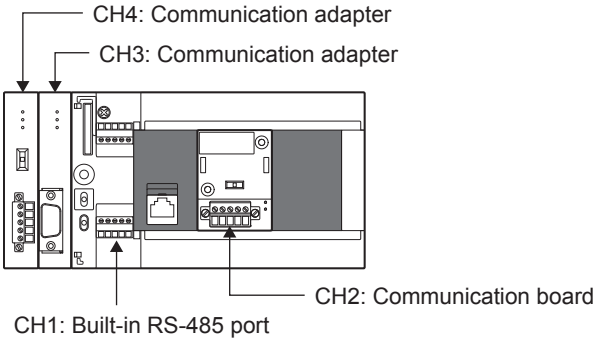

Ex.
When a communication function expansion board connected to the FX3U is replaced with an FX5U communication board, the communication channel changes from CH1 to CH2.

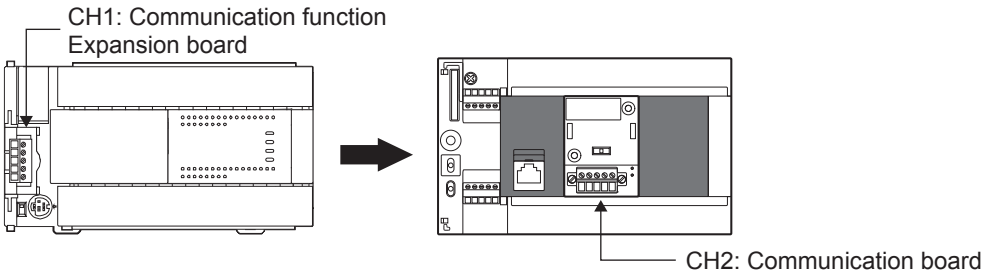

8.5 Replacement of the PLC

The main points to consider during replacement of the CPU module and extension modules are explained below.
For details of each item, check the reference pages in this document, and related manuals such as the PLC Hardware Manual and Programming Manual.

Device classification	Item	Operation content and points of attention	Reference page
CPU module	Reuse of the input/output wiring	Perform rewiring for the connection part of the terminal block type.	☞ Page 104
Other extension modules	Wiring to each module		
Verifying operation of the equipment	Operation and test of the PLC program	Operate the converted PLC program and hardware devices, and check and adjust the device function and operation timing. Be aware of the precautions described on the reference page for replacing the project, and check that the devices operate as they are designed.	☞ Page 112

8.6 Specifications Comparison

The following table lists the specifications comparison between the FX3U and FX5U.

Item		FX3U			FX5U		
Operation control system		Stored program repetitive operation system			Stored program repetitive operation system		
Input/output control system		Refresh system			Refresh system		
Programming language		Ladder diagram (LD) Structured text (ST) Function block diagram/ladder diagram (FBD/LD) Sequential function chart (SFC)			Ladder diagram (LD) Structured text (ST) Function block diagram/ladder diagram (FBD/LD) Sequential function chart (SFC)*1		
Program memory	Max. memory capacity/ type	64000 steps RAM memory (backed up by built-in lithium battery)			64000 steps/128000 steps*1 Max. allowable write: 20000 times		
	Writing function during running	Provided			Provided		
	Security function	Keyword/customer keyword function			Block password function/file password function		
Real-time clock	Clock function	Year, month, day, hour, minute, second, day of week (automatic leap year adjustment) Differences per month ±45 sec./25℃			Year, month, day, hour, minute, second, day of week (automatic leap year adjustment) Differences per month ±45 sec./25℃		
Processing speed	Basic instructions	LD X0: 65ns MOV D0 D1: 640ns			LD X0: 34ns*4 MOV D0 D1: 34ns*4		
Number of input/output points	(1) Extension-combined number of input points	248 points	256 points or less (Total number of points for (1) and (2))	384 points or less (Total number of points for (1) to (3))	256 points or less/384 points or less*1	256 points or less/384 points or less*1 (Total number of points for (1) and (2))	512 points or less (Total number of points for (1) to (3))
	(2) Extension-combined number of output points	248 points			256 points or less/384 points or less*1		
	(3) Number of remote I/O points	256 points or less*2 (CC-Link) 128 points or less (AnyWireASLINK)			384 points or less/512 points or less*1 (the total number of remote I/O points in CC-Link and AnyWireASLINK)		
Input relay		248 points (X)			384 points (X)		
Output relay		248 points (Y)			384 points (Y)		
Auxiliary relay		7680 points (M)			32768 points (M)*5		
State		4096 points (S)			4096 points (S) (fixed)		
Timer (on-delay timer)	Timer	310 points (T)			1024 points (T)*3*5		
	Retentive timer	10 points (T)			1024 points (ST)*5		
Counter	For 16 bits	200 points (C)			1024 points (C)*5		
	For 32 bits	35 points (C)			1024 points (LC)*5		

Item		FX3U	FX5U
High-speed counter	1-phase 1-count input (32 bits up/down)	C235	LC35
		C236	LC36
		C237	LC37
		C238	LC38
		C239	LC39
		C240	LC40
		C241	LC41
		C242	LC42
		C243	LC43
		C244	LC44
		C245	LC45
	1-phase 2-count input (32 bits up/down)	C246	LC46
		C247	LC47
		C248	LC48
		C249	LC49
		C250	LC50
	2-phase 2-count input (32 bits up/down)	C251	LC51
		C252	LC52
		C253	LC53
		C254	LC54
		C255	LC55
Data register		8000 points (D)	8000 points (D)*5
Index register	For 16 bits	16 points (V, Z)	24 points (Z)*6
	For 32 bits	—	12 points (LZ)*6
Extension register		32768 points (R)	32768 points (R)*5
Extension file register		32768 points (ER)	32768 points (ER) (stored in SD memory card)
Pointer		4096 points (P)	4096 points (P)
Interrupt pointer		15 points (I)	178 points (I) (fixed)

*1 For the compatible versions, refer to the following.
MELSEC iQ-F FX5 User's Manual (Application)

*2 224 points or less when the FX2N-16CCL-M is used.

*3 This item indicates the total number of count of the 10ms timer, 100ms timer, and 1ms timer.

*4 The value is for when the program capacity is 64k steps.

*5 The number of points can be changed with parameters within the capacity range of the CPU built-in memory.

*6 The sum of index register (Z) and long index register (LZ) is 24 words.

9 REPLACEMENT FROM FX3UC TO FX5UC

9.1 Outline

The FX5UC has compact and easy-to-use compatible extension modules, which makes downsizing of various devices possible. Connect to the FX5 and FX3 extension modules with the variety of conversion modules available.
The procedures and points for replacing an existing model with the FX5UC are shown below. Use this information to consider replacing existing models.

Points to consider

- The "recommended substitute models" are described for individual FX3UC and extension modules that can be replaced by iQ-F series models. According to usage and system configuration (connection status of the extension modules), and cases when the number of I/O points actually used are small, other models than the described "recommended substitute models" may be suitable for replacement.
- The recommended substitute models for extension modules and built-in batteries are described with those that can be connected to the FX5UC CPU module.
- Contents that require special caution when replacing each models are described in "Special notes". Most recommended substitute models have various differences in the specifications other than those in "Special notes" such as the dimension becoming smaller than the current models. Therefore, when considering usage, please check not only the "Special notes" but also the details of each specification such as the dimension and power specifications, in the manual.
- Based on the above conditions, "No recommended substitute models" is described for those without a recommended substitute model, but there are cases that can be replaced with an FX5UC system configuration according to usage and system configuration. Check the necessary functions and features when considering the replacement with FX5UC system configuration.

9.2 Replacement Procedure

The procedure for replacing the FX3UC with the FX5UC is shown below.
The successor model FX5UC is recommended when replacing from FX3UC.

1. Selection of the models

Select the substitute models.

☞ Page 122 Selection of Substitute Models

2. Conversion of the program

Convert the program used in FX3UC to be able to use in FX5UC.

☞ Page 130 Conversion of the Projects

3. Replacement to the substitute models

Replace the PLCs.

☞ Page 137 Replacement of the PLC

9.3 Selection of Substitute Models

Recommended substitute models

CPU modules (FX3GC → FX5UC)

The recommended substitute models of FX5UC compatible with FX3UC are introduced below.

Please consider replacing the currently used CPU modules with the following recommended substitute models.

Current model	Recommended substitute model	Special notes
FX3UC-16MR/D-T	FX5UC-32MR/DS-TS	The number of I/O points increases in the recommended substitute models. The wiring must be replaced from the European terminal block to the spring clamp terminal block.
FX3UC-16MT/D	FX5UC-32MT/D	The number of I/O points increases in the recommended substitute models.
FX3UC-32MT/D	FX5UC-32MT/D	—
FX3UC-64MT/D	FX5UC-64MT/D	—
FX3UC-96MT/D	FX5UC-96MT/D	—
FX3UC-16MR/DS-T	FX5UC-32MR/DS-TS	The number of I/O points increases in the recommended substitute models. The wiring must be replaced from the European terminal block to the spring clamp terminal block.
FX3UC-16MT/DSS	FX5UC-32MT/DSS	The number of I/O points increases in the recommended substitute models.
FX3UC-32MT/DSS	FX5UC-32MT/DSS	—
FX3UC-64MT/DSS	FX5UC-64MT/DSS	—
FX3UC-96MT/DSS	FX5UC-96MT/DSS	—
FX3UC-32MT-LT-2	No recommended substitute models	—
FX3UC-16MT/D-P4	FX5UC-32MT/D	The number of I/O points increases in the recommended substitute models.
FX3UC-16MT/DSS-P4	FX5UC-32MT/DSS	The number of I/O points increases in the recommended substitute models.

Extension devices (FX3UC → FX5UC)

The following list shows the extension devices that also need to be replaced when replacing the CPU module from FX3UC to FX5UC.

For products without a substitute model of the same function, check the contents described in the Special notes and please consider system reconfiguration.

■Extension I/O

Current model	Recommended substitute model	Special notes
FX2NC-16EX	FX5-C16EX/D	—
FX2NC-16EX-DS	FX5-C16EX/DS	—
FX2NC-16EX-T	FX5-C32EX/DS-TS	The number of I/O points increases in the recommended substitute models. The wiring must be replaced from the European terminal block to the spring clamp terminal block.
FX2NC-16EX-T-DS	FX5-C32EX/DS-TS	—
FX2NC-16EYT	FX5-C16EYT/D	—
FX2NC-16EYT-DSS	FX5-C16EYT/DSS	—
FX2NC-16EYR-T	FX5-C16EYR/D-TS	The wiring must be replaced from the European terminal block to the spring clamp terminal block.
FX2NC-16EYR-T-DS	FX5-C16EYR/D-TS	—
FX2NC-32EX	FX5-C32EX/D	—
FX2NC-32EX-DS	FX5-C32EX/DS	—
FX2NC-32EYT	FX5-C32EYT/D	—
FX2NC-32EYT-DSS	FX5-C32EYT/DSS	—
FX2NC-64ET	FX5-C32EX/D+FX5-C32EYT/D	The 40-pin connector must be replaced with the 20-pin connector.
FX2N-8ER	FX5-16ER/ES	The number of I/O points increases in the recommended substitute models.
FX2N-8ER-ES/UL	FX5-16ER/ES	The number of I/O points increases in the recommended substitute models.
FX2N-8EX	FX5-8EX/ES	—
FX2N-8EX-ES/UL	FX5-8EX/ES	—
FX2N-8EX-UA1/UL	No recommended substitute models	—
FX2N-16EX	FX5-16EX/ES	—
FX2N-16EX-ES/UL	FX5-16EX/ES	—
FX2N-16EX-C	FX5-C16EX/D	—
FX2N-16EXL-C	No recommended substitute models	—
FX2N-8EYR	FX5-8EYR/ES	—
FX2N-8EYR-ES/UL	FX5-8EYR/ES	—
FX2N-8EYR-S-ES/UL	No recommended substitute models	—
FX2N-8EYT	FX5-8EYT/ES	—
FX2N-8EYT-ESS/UL	FX5-8EYT/ESS	—
FX2N-8EYT-H	No recommended substitute models	—
FX2N-16EYR	FX5-16EYR/ES	—
FX2N-16EYR-ES/UL	FX5-16EYR/ES	—
FX2N-16EYT	FX5-16EYT/ES	—
FX2N-16EYT-ESS/UL	FX5-16EYT/ESS	—
FX2N-16EYT-C	FX5-C16EYT/D	—
FX2N-16EYS	No recommended substitute models	—

■Extension device

Current model	Recommended substitute model	Special notes
FX2N-1HC	FX5-16ET/ES-H	Select this model when the open collector 24VDC input and sink output are used. When 12VDC input or 5VDC input is used, there is no substitute model.
	FX5-16ET/ESS-H	Select this model when the open collector 24VDC input and source output are used. When 12VDC input or 5VDC input is used, there is no substitute model.
	FX5-2HC/ES	Select this model when the differential line driver input is used. The wiring must be replaced from the screw terminal block to the spring clamp terminal block. The FX5-2HC/ES does not support the source output.
FX3U-2HC	FX5-16ET/ES-H	Select this model when the open collector 24VDC input and sink output are used. The wiring must be replaced from the MIL connector to the screw terminal block. When 12VDC input or 5VDC input is used, there is no substitute model.
	FX5-16ET/ESS-H	Select this model when the open collector 24VDC input and source output are used. The wiring must be replaced from the MIL connector to the screw terminal block. When 12VDC input or 5VDC input is used, there is no substitute model.
	FX5-2HC/ES	Select this model when the differential line driver input is used. The wiring must be replaced from the MIL connector to the spring clamp terminal block. The FX5-2HC/ES does not support the source output.
FX2N-4AD-TC	FX5-4AD-TC-ADP	The wiring must be replaced from the screw terminal block to the European terminal block.
FX2N-4AD-PT	FX5-4AD-PT-ADP	The wiring must be replaced from the screw terminal block to the European terminal block.
FX3UC-4AD	FX5-4AD	The wiring must be replaced from the European terminal block to the spring clamp terminal block.
FX2N-5A	FX5-4AD+FX5-4DA	The wiring must be replaced from the screw terminal block to the spring clamp terminal block.
FX2N-2AD	FX5-4AD	The wiring must be replaced from the screw terminal block to the spring clamp terminal block.
FX2N-4AD	FX5-4AD	The wiring must be replaced from the screw terminal block to the spring clamp terminal block.
FX2N-8AD	FX5-8AD	The wiring must be replaced from the screw terminal block to the spring clamp terminal block.
FX3U-4AD	FX5-4AD	The wiring must be replaced from the screw terminal block to the spring clamp terminal block.
FX2N-2LC	FX5-4LC	The wiring must be replaced from the screw terminal block to the spring clamp terminal block.
FX3U-4LC	FX5-4LC	The wiring must be replaced from the screw terminal block to the spring clamp terminal block.
FX2N-2DA	FX5-4DA	The wiring must be replaced from the screw terminal block to the spring clamp terminal block.
FX2N-4DA	FX5-4DA	The wiring must be replaced from the screw terminal block to the spring clamp terminal block.
FX3U-4DA	FX5-4DA	The wiring must be replaced from the screw terminal block to the spring clamp terminal block.
FX2N-10PG	FX5-20PG-D	Replacement is necessary due to the difference of the connector type.
FX3U-1PG	FX5-16ET/ES-H	—
	FX5-20PG-P	Select this model when approximate S-curve acceleration/deceleration is used. The wiring must be replaced from the screw terminal block to the connector for external devices.
FX3U-20SSC-H	FX5-40SSC-S	Replacement is necessary due to the difference of the connector type for external input connection. One module per system.
FX2N-232IF	FX5-232-BD FX5-232ADP	—

Current model	Recommended substitute model	Special notes
FX2N-32CCL	FX5-CCL-MS	Set it as an intelligent device station when using the recommended substitute model.*1
FX2N-64CL-M	No recommended substitute models	
FX3U-16CCL-M	FX5-CCL-MS	Set it as the master station when using the recommended substitute model.*1
FX3U-64CCL	FX5-CCL-MS	Set it as an intelligent device station when using the recommended substitute model.*1
FX3U-128ASL-M	FX5-ASL-M	—
FX3U-ENET	FX5-ENET	If the e-mail sending function is not needed, the FX5 CPU module also can be used as a replacement. If the e-mail sending function is required, use the module that is manufactured in or after April 2023.
FX3U-ENET-L	FX5-ENET	If the e-mail sending function is not needed, the FX5 CPU module also can be used as a replacement. If the e-mail sending function is required, use the module that is manufactured in or after April 2023.
FX3U-64DP-M	FX5-DP-M	—
FX3U-32DP	No recommended substitute models	—
FX3U-CAN	No recommended substitute models	—
FX3U-J1939	No recommended substitute models	—
FX2N-10GM	FX5-20PG-P	It cannot be used alone. Replacement is necessary due to the difference of the connector type.
FX2N-20GM	FX5-20PG-P	It cannot be used alone. Replacement is necessary due to the difference of the connector type.
FX2N-1RM-SET	No recommended substitute models	—
FX2N-1RM-SET-E		—
FX2N-32DP-IF-D	No recommended substitute models	—
FX2N-64DNET	No recommended substitute models	—

*1 FX5-CCL-MS can be used as a master station or an intelligent device station.

■Expansion adapter

Current model	Recommended substitute model	Special notes
FX3U-232ADP	FX5-232ADP	—
FX3U-232ADP-MB		—
FX3U-485ADP	FX5-485ADP	—
FX3U-485ADP-MB		—
FX3U-ENET-ADP	No recommended substitute models	Ethernet port is built into FX5UC CPU module.
FX3U-3A-ADP	FX5-4A-ADP	—
FX3U-4AD-ADP	FX5-4AD-ADP	—
FX3U-4DA-ADP	FX5-4DA-ADP	—
FX3U-4AD-PT-ADP	FX5-4AD-PT-ADP	—
FX3U-4AD-PTW-ADP	FX5-4AD-PT-ADP	—
FX3U-4AD-PNK-ADP	No recommended substitute models	—
FX3U-4AD-TC-ADP	FX5-4AD-TC-ADP	—
FX3U-CF-ADP	No recommended substitute models	Substituted by an SD memory card.

■Option

Current model	Recommended substitute model	Special notes
FX2NC-CNV-IF	FX5-CNV-IFC	—
FX3UC-1PS-5V	FX5-C1PS-5V	—
FX3U-FLROM-16	No recommended substitute models	Substituted by an SD memory card.
FX3U-FLROM-64	No recommended substitute models	Substituted by an SD memory card.
FX3U-FLROM-64L	No recommended substitute models	Substituted by an SD memory card.
FX3U-FLROM-1M	No recommended substitute models	Substituted by an SD memory card.
FX-30P	No recommended substitute models	—
FX0N-30EC	FX5-30EC	—
FX0N-65EC	FX5-65EC	—
FX2N-CNV-BC	FX5-CNV-BC	—

Extension devices that can be reused when the CPU module is replaced to FX5UC

The following extension devices can be used by connecting a bus conversion module (FX5-CNV-BUSC or FX5-CNV-BUS) even when the CPU module is replaced (FX3UC → FX5UC).

Analog	Positioning	High-speed counter	Network	Terminal block*1	
FX3U-4AD FX3U-4DA FX3U-4LC	FX3U-1PG	FX3U-2HC	FX3U-16CCL-M*2 FX3U-64CCL FX3U-128ASL-M*2 FX3U-32DP	FX-16E-TB FX-32E-TB FX-16EX-A1-TB FX-16EYR-TB FX-16EYS-TB FX-16EYT-TB	FX-16E-TB/UL FX-32E-TB/UL FX-16EYR-ES-TB/UL FX-16EYS-ES-TB/UL FX-16EYT-ES-TB/UL FX-16EYT-ESS-TB/UL

*1 The terminal block can be used without connecting a bus conversion module.

*2 It is necessary to set the parameter with the PLC program.

Battery

The battery (FX3U-32BL) used in FX3UC can also be used with FX5UC.

Precautions regarding the hardware

Comparison of FX3UC and FX5UC and precautions for replacement

The following list shows precautions of the hardware. Check details in the manuals of each models when replacing.

■Difference and precautions regarding the main hardware of FX3UC and FX5UC

Item	Difference		Precautions
	FX3UC	FX5UC	
Extension of FX2N, FX2NC, FX3U, and FX3UC	Extension possible	Extension is possible only for certain modules. FX5-CNV-BUSC or FX5-CNV-BUS is required for extension.	Connection is not possible for some intelligent modules of FX3U.
Input hardware filter (When the digital filter is 0) • High-speed counter • Input interruption function • Pulse catch function	X0 to X5: 5 μs X6 and X7: 50 μs X10 to X17: 200 μs	■In the case of FX5UC-32M X0 to X5: • ON: 2.5 μs or less • OFF: 2.5 μs or less X6 to X17: • ON: 30 μs or less • OFF: 50 μs or less ■In the case of FX5UC-64M and FX5UC-96M X0 to X7: • ON: 2.5 μs or less • OFF: 2.5 μs or less X10 to X17: • ON: 30 μs or less • OFF: 50 μs or less X20 and later: • ON: 50 μs or less • OFF: 150 μs or less	Noises that were not detected by FX3UC may possibly be captured as an input. Take external measures against noise, or set an appropriate input response time parameter (initial value: 10ms).
Input signal current	X0 to X5: 6 mA X6 and X7: 7 mA X10 or later: 5 mA	X0 to X17: 5.3 mA X20 or later: 4 mA	The input signal current has been lowered, so it is necessary to check the specification of the external devices when replacing.

■External dimensions

There is some difference in the external dimension of FX3UC and the successor model FX5UC. Be careful when replacing the modules.

• FX3UC

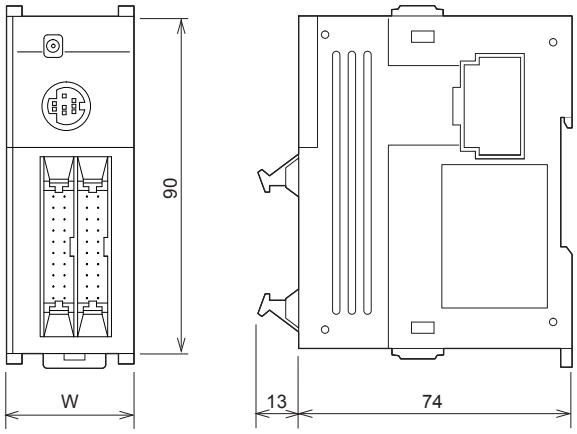

External color: Munsell 0.08GY/7.64/0.81
Unit: mm
35 mm width DIN rail can be installed

[Accessories]
FX2NC-100MPCB power cable
FX2NC-100BPCB power cable (only FX3UC-□MT/D)

Model name	W: mm	Weight: kg
FX3UC-16MT/D, DSS, FX3UC-32MT/D, DSS, FX3UC-16MT/D-P4, FX3UC-16MT/DSS-P4	34.0	Approx. 0.20
FX3UC-64MT/D, DSS	59.7	Approx. 0.30
FX3UC-96MT/D, DSS	85.4	Approx. 0.35

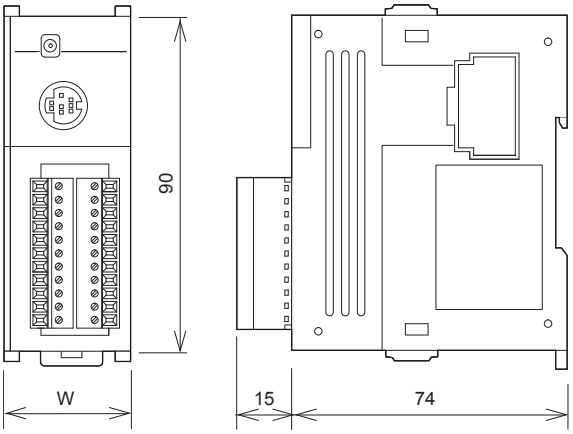

External color: Munsell 0.08GY/7.64/0.81
Unit: mm
35 mm width DIN rail can be installed

[Accessories]
FX2NC-100MPCB power cable
FX2NC-100BPCB power cable (only FX3UC-16MR/D-T)

Model name	W: mm	Weight: kg
FX3UC-16MR/D-T, FX3UC-16MR/DS-T	34.0	Approx. 0.25

• FX5UC

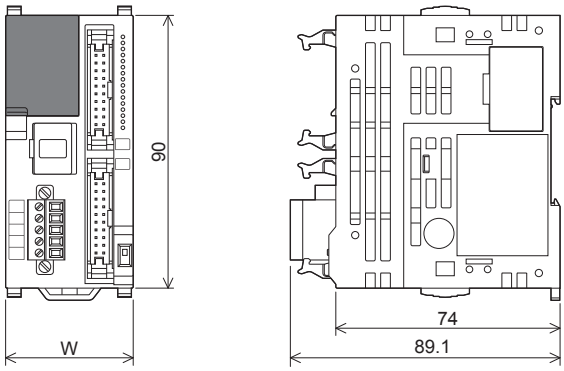

External color: Munsell 0.6B7.6/0.2
Unit: mm
35 mm width DIN rail can be installed

[Accessories]
FX2NC-100MPCB power cable
FX2NC-100BPCB power cable (only FX5UC-□MT/D)

Model name	W: mm	Weight: kg
FX5UC-32MT/D, DSS	42.1	Approx. 0.20
FX5UC-64MT/D, DSS	62.2	Approx. 0.30
FX5UC-96MT/D, DSS	82.3	Approx. 0.35

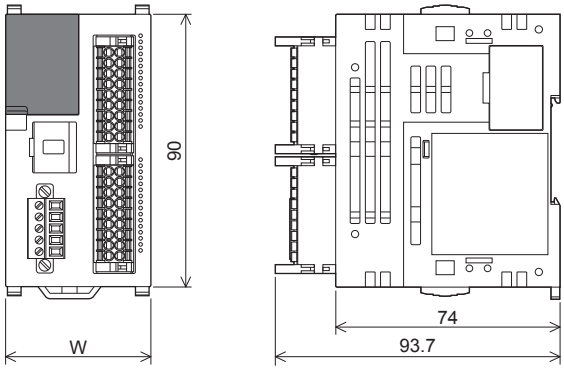

External color: Munsell 0.6B7.6/0.2
Unit: mm
35 mm width DIN rail can be installed

[Accessories]
FX2NC-100MPCB power cable

Model name	W: mm	Weight: kg
FX5UC-32MR/DS-TS	68.2	Approx. 0.35

■Cable sizes for European type terminal block

Suitable wiring and tightening torque are described below.

	Wire size for one wire	Wire size for two wires	Ferrule with insulation sleeve (wire size)	Tightening torque	Stripping dimensions of electric wire ends
Built-in RS-485 communication terminal block	22 to 20 AWG	22 AWG	22 to 20 AWG	0.22 to 0.25 N·m	9 mm
FX3U-485ADP, FX3U-485ADP-MB					
FX5-485ADP					
FX5-4AD-ADP, FX5-4DA-ADP, FX5-4A-ADP, FX5-4AD-PT-ADP, FX5-4AD-TC-ADP				0.20 N·m	

9.4 Conversion of the Projects

When converting FX3UC projects to FX5UC projects, use GX Works3.

After converting the projects, it may be necessary to adjust the programs (instructions, devices) and parameters.

For the replacement of the SFC program, refer to ☞ Page 163 Conversion of the SFC Program.

Operation method for replacing projects

To convert FX3UC projects to FX5UC projects, perform operations in GX Works3.

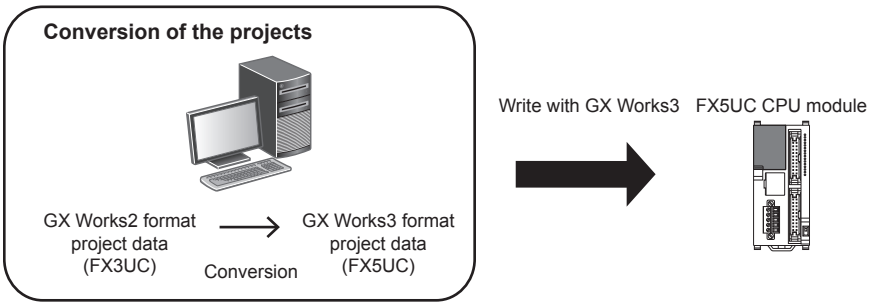

To convert the projects, install the engineering tool of the following version.

Engineering tool	Version	Remarks
GX Works3	1.020W or later	—
GX Works2	1.519R or later	Supplied with GX Works3.

Precautions

- To read projects of GX Works2 using GX Works3, convert beforehand using GX Works2, and then read the projects. Even for projects converted using GX Works2, conversion may not be performed according to the state of the project. If there is an error in the program, operation will be canceled.
- To read projects of GX Works2 using GX Works3, delete the security (user Management, data security setting) of GX Works2 beforehand and then read the projects. If the security is set to the GX Works2 project, read out will be canceled.
- To read projects of GX Works2 using GX Works3, administrator rights are required.

Operating procedure

1. Start up GX Works3.

2. Open the FX3UC project.

Select [Project] ⇨ [Open Other Format File] ⇨ [GX Works2 Format] ⇨ [Open Project] ⇨ Project (***.gxw).

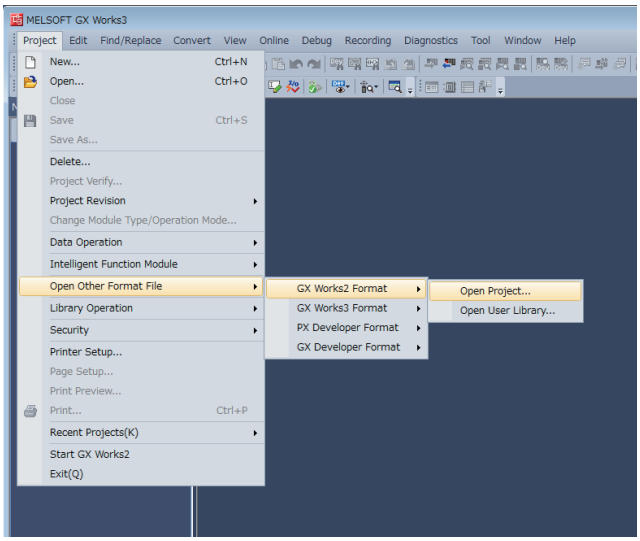

3. The following display is shown.

A selection screen of the following new module type and conversion method is shown.

Select the new module type and conversion method, and press the [Execute] button.

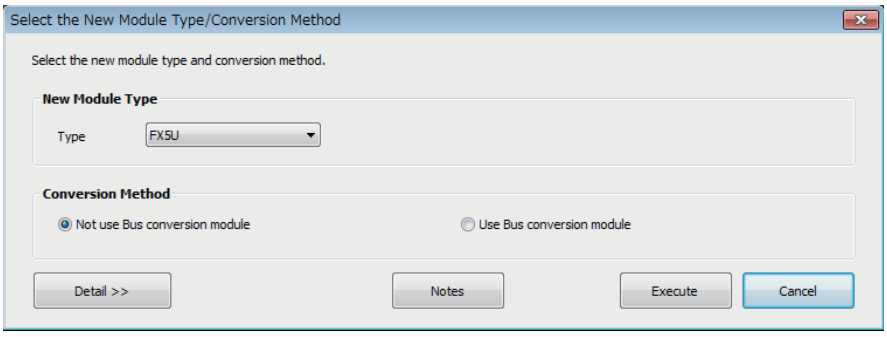

Point

- The display contents may vary depending on the version of the software.
- Precautions for the converted project are displayed. Please read carefully through the contents before use.

4. When conversion is completed, the following message is shown.

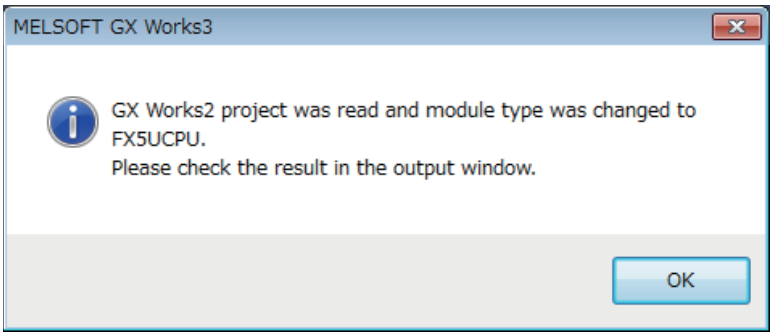

5. Check the contents of the model change result in the "Output window".

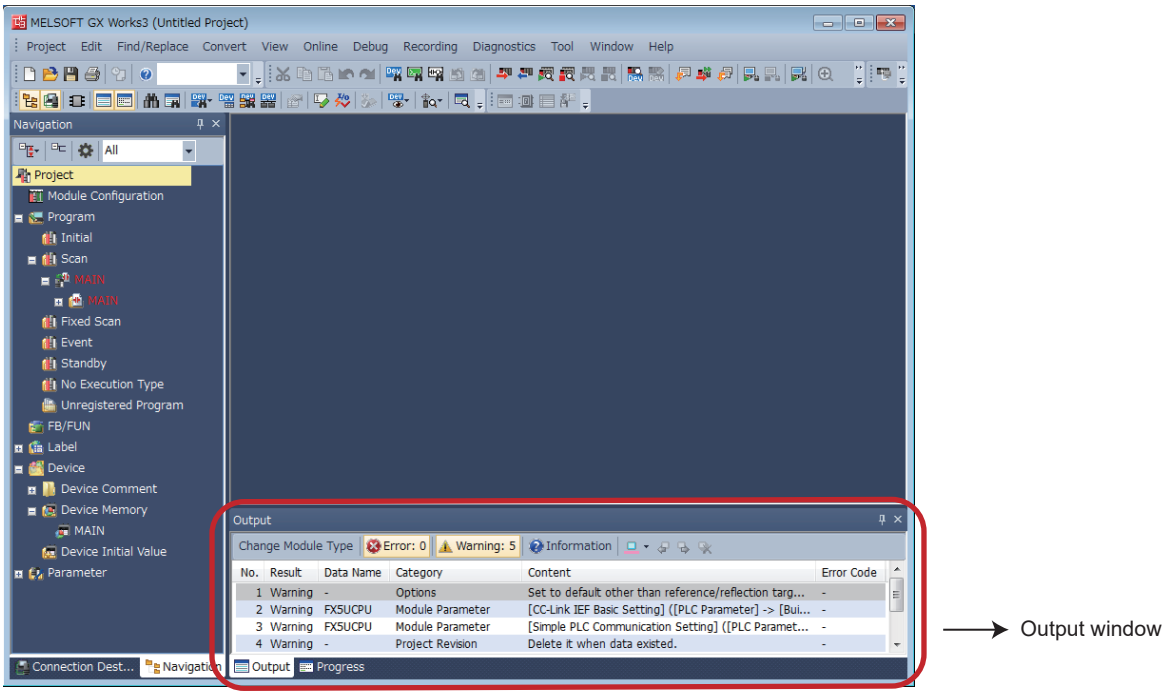

Precautions

- For GX Works3 versions earlier than 1.025B, the program must be changed from "No Execution Type". (Changing to "Scan" or other settings)
- When projects are converted, the program instructions and devices may be changed. Check the contents of the project. Parameters other than the network parameter of CC-Link*1 will be deleted. Set the parameters if necessary.

*1 For the network parameters of CC-Link, refer to ☞ Page 133 Precautions when replacing the parameters.

6. Set the model name of the CPU for the system parameter.

[System Parameter] ⇨ [I/O Assignment Setting] ⇨ Model Name

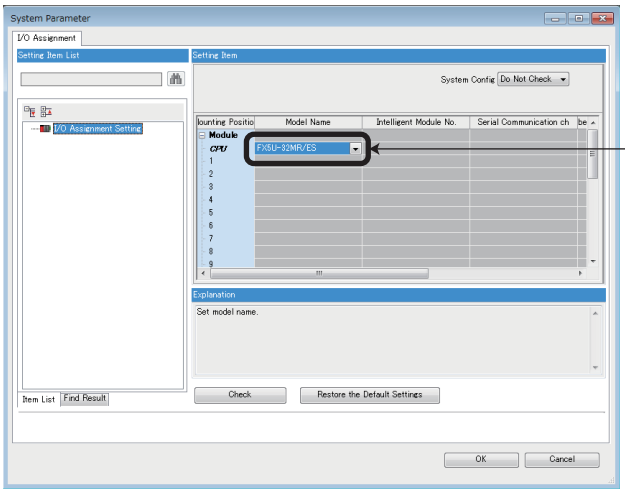

7. Perform conversion.

[Convert] ⇨ [Rebuild All]

Precautions when converting the projects

- When converting FX3UC projects using GX Works3, be careful because the program (instructions and devices) may be changed.
- When converting projects, the number of steps may increase and writing to the FX5UC may be impossible. Check the number of steps after replacement.
- Characters used for the label name in GX Works2 may correspond to reserved words or illegal characters in GX Works3. In that case, change the label name.

For precautions regarding instruction and device replacement, refer to ☞ Page 140 Instruction Replacement List.

Precautions when replacing the parameters

When converting FX3UC projects to FX5UC projects, the setting data of the parameters (PC parameters and network parameters) and special modules (intelligent function modules) will be deleted. Therefore, it is necessary to set the data with GX Works3 again.

Also, GX Works3 does not support the following parameters of the FX3UC, so it is necessary to set these parameters with GX Works3 again.

- Network parameter (CC-Link)
- Intelligent function module parameter (AnyWireASLINK)

Precautions when replacing other functions

Precautions when using the high-speed counters

When the high-speed counters (C235 to C255) are used with the FX3UC, they will not operate just by switching to the FX5UC.

It is necessary to set the FX3 Series compatible high-speed counters and change the program by the parameter. For the setting procedure, refer to the following.

■Parameter setting procedure of the FX3 series compatible high-speed counters

1. Select "Long Counter Specification" at the specification for high-speed counters.

[Parameter] ⇨ [FX5UCPU] ⇨ [Module Parameter] ⇨ [High Speed I/O] ⇨ "Input Function" ⇨ "High Speed Counter" ⇨ "Detailed Setting" ⇨ "Other"

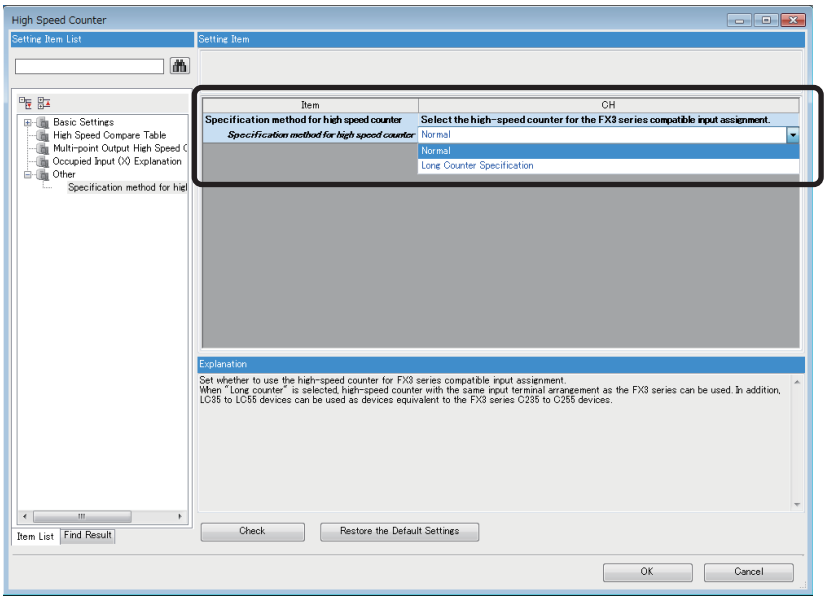

2. Set the function of the high-speed counters used with the FX3UC.

Select the input comparison enable/disable of the counter device and preset input compatible with the FX3 Series, and select the control switch.

Item	CH1	CH2	
Use/Do Not Use Counter	**Set whether to use counter or not.**		
Use/Not Use	Enable	Disable	Disable
Counter device	**Select the high-speed counter for the FX3 series compatible input assignment.**		
Counter device	LC35 (Operation equivalent to C235)	LC36 (Operation equivalent to C236)	LC37 (Operatic
Operation Mode	**Set operation mode.**		
Operation Mode	Normal Mode	Normal Mode	Normal Mode
Pulse Input Mode	**Set pulse input mode.**		
Pulse Input Mode	1-Phase 1 Input (S/W Up/Down Switch)	1-Phase 1 Input (S/W Up/Down Switch)	1-Phase 1 Inpu
Preset Input	**Set preset input.**		
Preset Input Enable/Disable	Disable	Disable	Disable
Input logic	Positive Logic	Positive Logic	Positive Logic
Preset Value	0	0	0
Input Comparison Enable/Disable	Enable	Enable	Enable
Control Switch	Rising	Rising	Rising
Enable Input	**Set enable input.**		
Enable Input Enable/Disable	Disable	Disable	Disable
Input logic	Positive Logic	Positive Logic	Positive Logic
Ring Length Setting	**Set ring length.**		
Ring Length Enable/Disable	Disable	Disable	Disable
Ring Length	2147483648	2147483648	2147483648
Measurement Unit Time	**Set the measurement unit time (ms) for the pulse density measurement mode and rotation speed measurement mode.**		
Measurement Unit Time	1000 ms	1000 ms	1000 ms
Number of Pulses per Rotation	**Set the number of pulses per rotation when using the rotation speed measurement mode.**		
Number of Pulses per Rotation	1000 pulse	1000 pulse	1000 pulse

■Changing the program

Change the high-speed counter program by referring to the following program example.

[Example of program]

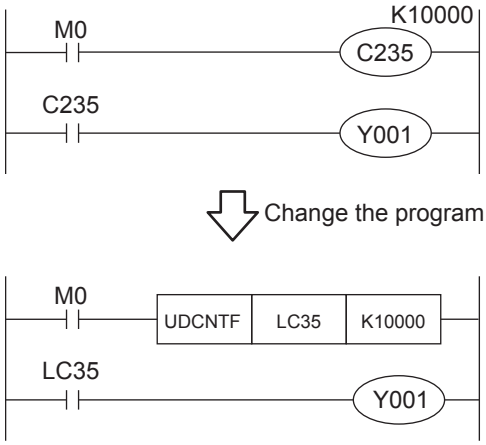

Precautions when using the routine timer

When the routine timer (T192 to T199) is used with the FX3UC, it will not operate just by switching to the FX5UC.

The routine timer must be set by the parameter. For the setting procedure, refer to the following.

■Parameter Setting Procedure of the Routine Timer

Set the use of the routine timer and the leading device number.

[Parameter] ⇨ [FX5UCPU] ⇨ [CPU Parameter] ⇨ "Memory/Device Setting" ⇨ "Device/Label Memory Area Setting"

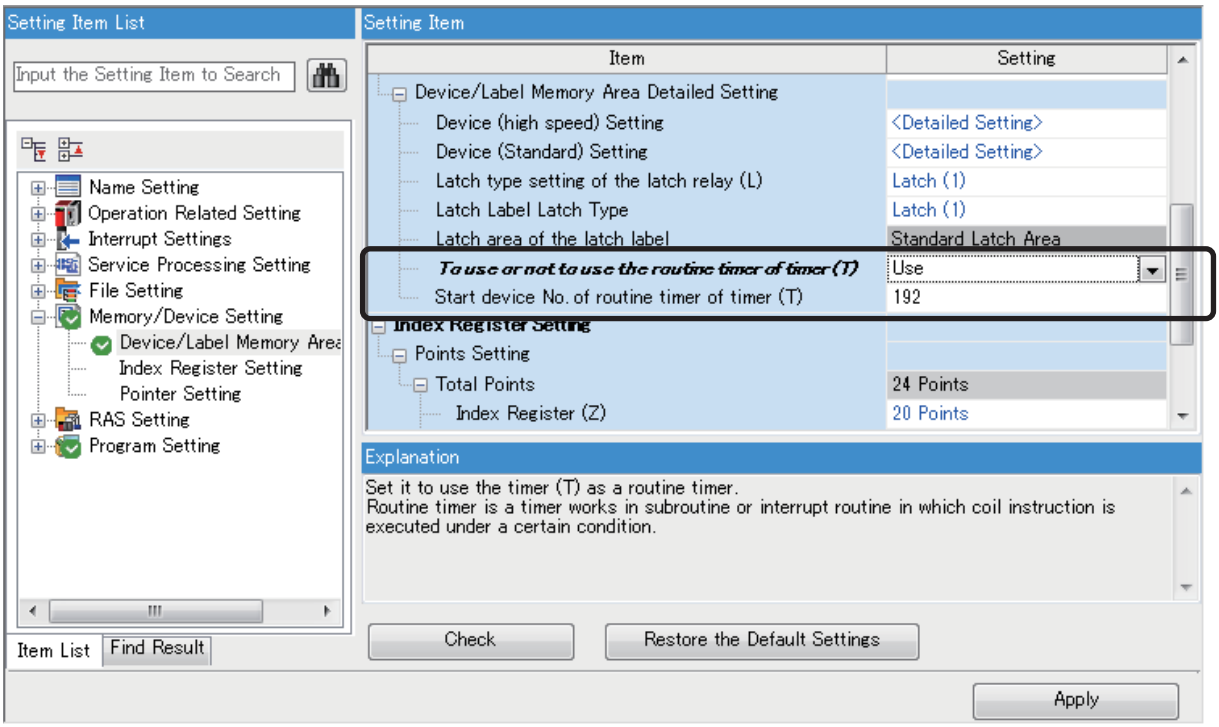

Serial communication channel assignment (RS-485, RS-232C)

When the FX3UC is replaced with the FX5UC, the communication channel assignments that can be used change.
Change the communication channels specified with instructions and parameter settings so that these channels match the specifications.

■FX3UC communication channel assignment

Special communication adapters can be used to connect up to two channels of serial ports.
The configurable combination is shown below.

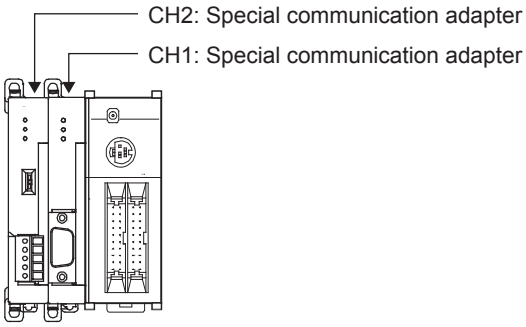

■FX5UC communication channel assignment

The built-in RS-485 port and communication adapters can be used to connect up to three channels of serial ports.
The communication channel assignments are fixed regardless of the system configuration.

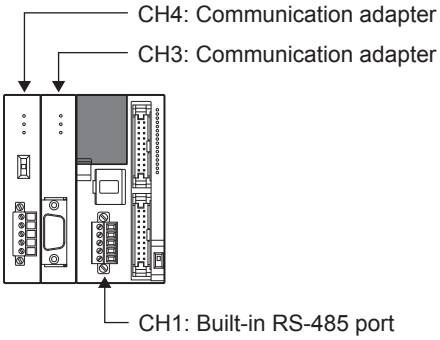

Ex.

When a special communication adapter connected to the FX3UC is replaced with an FX5UC communication adapter, the communication channel changes from CH1 to CH3.

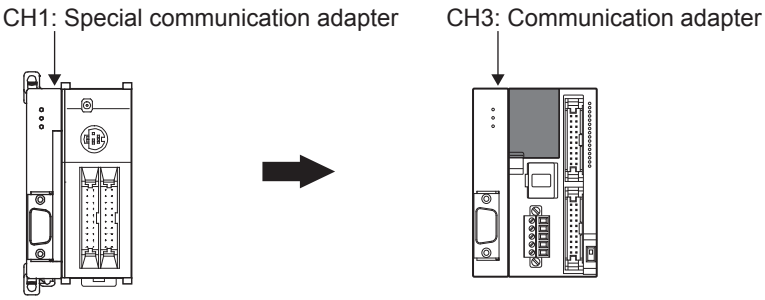

9.5 Replacement of the PLC

The main points to consider during replacement of the CPU module and extension devices are explained below.
For details of each item, check the reference pages in this document, and related manuals such as the PLC Hardware Manual and Programming Manual.

Device classification	Item	Operation content and points of attention	Reference page
CPU module	Connector connection of the input/output wiring	The input/output connector and 24 V DC connector types and signal names are the same for FX3UC and FX5UC. Reconnect the cable removed from FX3UC to FX5UC. Perform rewiring for the connection part of the terminal block type.	☞ Page 122
	Connector connection of the 24 V DC power cable		
Other extension modules	Wiring to each module	The input/output connector (excluding for the FX2NC-64ET) and 24VDC connector types and signal names are the same for the FX2NC and FX5UC. Reconnect the cable removed from FX2NC to FX5UC. Perform rewiring for the connection part of the terminal block type.	
Verifying operation of the equipment	Operation and test of the PLC program	Operate the converted PLC program and hardware devices, and check and adjust the device function and operation timing. Be aware of the precautions described on the reference page for replacing the project, and check that the devices operate as they are designed.	☞ Page 130

9.6 Specifications Comparison

The following table lists the specifications comparison between the FX3UC and FX5UC.

Item		FX3UC			FX5UC		
Operation control system		Stored program repetitive operation system			Stored program repetitive operation system		
Input/output control system		Refresh system			Refresh system		
Programming language		Ladder diagram (LD) Structured text (ST) Function block diagram/ladder diagram (FBD/LD) Sequential function chart (SFC)			Ladder diagram (LD) Structured text (ST) Function block diagram/ladder diagram (FBD/LD) Sequential function chart (SFC)[*1]		
Program memory	Max. memory capacity/ type	64000 steps RAM memory (backed up by built-in lithium battery)			64000 steps/128000 steps[*1] Max. allowable write: 20000 times		
	Writing function during running	Provided			Provided		
	Security function	Keyword/customer keyword function			Block password function/file password function		
Real-time clock	Clock function	Year, month, day, hour, minute, second, day of week (automatic leap year adjustment) Differences per month ±45 sec./25℃			Year, month, day, hour, minute, second, day of week (automatic leap year adjustment) Differences per month ±45 sec./25℃		
Processing speed	Basic instructions	LD X0: 65ns MOV D0 D1: 640ns			LD X0: 34ns[*2] MOV D0 D1: 34ns[*2]		
Number of input/output points	(1) Extension-combined number of input points	■Ver.2.20 or later • 248 points[*3] ■Earlier than Ver. 2.20 • 240 points	256 points or less (Total number of points for (1) and (2))	384 points or less[*5] (Total number of points for (1) to (3))	256 points or less/384 points or less[*1]	256 points or less/384 points or less[*1] (Total number of points for (1) and (2))	512 points or less (Total number of points for (1) to (3))
	(2) Extension-combined number of output points	■Ver.2.20 or later • 248 points[*3] ■Earlier than Ver. 2.20 • 240 points			256 points or less/384 points or less[*1]		
	(3) Number of remote I/O points	256 points or less[*4] (CC-Link) 128 points or less (AnyWireASLINK)	256 points or less (the total number of remote I/O points in CC-Link and AnyWireASLINK)		384 points or less/512 points or less[*1] (the total number of remote I/O points in CC-Link and AnyWireASLINK)		
Input relay		248 points (X)[*3]			384 points (X)		
Output relay		248 points (Y)[*3]			384 points (Y)		
Auxiliary relay		7680 points (M)			32768 points (M)[*6]		
State		4096 points (S)			4096 points (S) (fixed)		
Timer (on-delay timer)	Timer	502 points (T)			1024 points (T)[*6]		
	Retentive timer	10 points (T)			1024 points (ST)[*6]		
Counter	For 16 bits	200 points (C)			1024 points (C)[*6]		
	For 32 bits	35 points (C)			1024 points (LC)[*6]		

Item		FX3UC	FX5UC
High-speed counter	1-phase 1-count input (32 bits up/down)	C235	LC35
		C236	LC36
		C237	LC37
		C238	LC38
		C239	LC39
		C240	LC40
		C241	LC41
		C242	LC42
		C243	LC43
		C244	LC44
		C245	LC45
	1-phase 2-count input (32 bits up/down)	C246	LC46
		C247	LC47
		C248	LC48
		C249	LC49
		C250	LC50
	2-phase 2-count input (32 bits up/down)	C251	LC51
		C252	LC52
		C253	LC53
		C254	LC54
		C255	LC55
Data register		8000 points (D)	8000 points (D)*6
Index register	For 16 bits	16 points (V, Z)	24 points (Z)*7
	For 32 bits	—	12 points (LZ)*7
Extension register		32768 points (R)	32768 points (R)*6
Extension file register		32768 points (ER)	32768 points (ER) (stored in SD memory card)
Pointer		4096 points (P)	4096 points (P)
Interrupt pointer		15 points (I)	178 points (I) (fixed)

*1 For the compatible versions, refer to the following.
MELSEC iQ-F FX5 User's Manual (Application)
*2 The value is for when the program capacity is 64k steps.
*3 The value is 240 points or less when the FX3UC-32MT-LT(-2) is used.
*4 The value is 224 points or less when the FX2N-16CCL-M is used.
*5 If CC-Link is used for the FX3UC-32MT-LT with a version earlier than 2.20, the value will be 256 points or less.
*6 The number of points can be changed with parameters within the capacity range of the CPU built-in memory.
*7 The sum of index register (Z) and long index register (LZ) is 24 words.

APPENDICES

When converting MELSEC FX3 series projects using GX Works3, be aware that the program (instructions and devices) may be changed.
When converting projects, the number of steps may increase and writing to the FX5 CPU module may be impossible. Check the number of steps after replacement.
Characters used for the label name in GX Works2 may correspond to reserved words or illegal characters in GX Works3. In that case, change the label name.

Appendix 1 Instruction Replacement List

Instruction replacement list of ladder programs

■Replaced instructions

The following instructions will be replaced with GX Works3 compatible instructions when converting the project.

FX3 series	→	MELSEC iQ-F	Remarks
OUT T	→	For 1ms timer: OUTHS T/ST	When a label is used instead of a timer device, the instructions will not be replaced.*1
	→	For 10ms timer: OUTH T/ST	
	→	For 100ms: OUT T/ST	
INT	→	FLT2INT	—
INTP	→	FLT2INTP	—
DINT	→	FLT2DINT	—
DINTP	→	FLT2DINTP	—
RET	→	RETSTL	—
FLT	→	INT2FLT	—
FLTP	→	INT2FLTP	—
DFLT	→	DINT2FLT	—
DFLTP	→	DINT2FLTP	—
DTBL	→	TBL	—
SQR	→	SQRT	—
SER	→	SERMM	—
RAMP	→	RAMPF	—
SORT	→	SORTTBL	—
HEX	→	HEXA	—
SORT2	→	SORTTBL2	—
HOUR	→	HOURM	—
SQRP	→	SQRTP	—
DSQR	→	DSQRT	—
DSQRP	→	DSQRTP	—
SERP	→	SERMMP	—
DSER	→	DSERMM	—
DSERP	→	DSERMMP	—
HEXP	→	HEXAP	—
DSORT2	→	DSORTTBL2	—
DHOUR	→	DHOURM	—
IVCK	→	IVCK	SM4095 is added to parameters of instructions. Change to an appropriate device or label.
IVDR	→	IVDR	
IVRD	→	IVRD	
IVWR	→	IVWR	
IVBWR	→	IVBWR	
IVMC	→	IVMC	
ADPRW	→	ADPRW	

FX3 series	→	MELSEC iQ-F	Remarks
PR	→	OUT SM4095	These instructions are not supported by MELSEC iQ-F. Therefore, it will be replaced with OUT SM4095.
COMRD	→	OUT SM4095	
COMRDP	→	OUT SM4095	
REFF	→	OUT SM4095	Correct the program to use REF instruction.
REFFP	→	OUT SM4095	Correct the program to use REFP instruction.
DHSCT	→	OUT SM4095	Set the high-speed comparison table or multi-point output high-speed comparison table in the module parameter "High-speed I/O".
PLSR	→	OUT SM4095	Correct the program to use DRVI instruction. Set the acceleration/deceleration time specified by the PLSR instruction operand as the acceleration time and deceleration time of SD.
DPLSR	→	OUT SM4095	Correct the program to use DDRVI instruction. Set the acceleration/deceleration time specified by the DPLSR instruction operand as the acceleration time and deceleration time of SD.
RS	→	OUT SM4095	Correct the program to use RS2 instruction.
VRRD	→	OUT SM4095	These instructions are not supported by MELSEC iQ-F. Therefore, it will be replaced with OUT SM4095.
VRRDP	→	OUT SM4095	
VRSC	→	OUT SM4095	
VRSCP	→	OUT SM4095	
ZRN	→	OUT SM4095	Correct the program to use DSZR instruction. Use the same device for near-point dog signal and zero point signal of the DSZR instruction, and set the zero point signal count start time to the rear end and the zero point signal count to 1.
DZRN	→	OUT SM4095	Correct the program to use DDSZR instruction. Use the same device for near-point dog signal and zero point signal of the DDSZR instruction, and set the zero point signal count start time to the rear end and the zero point signal count to 1.
HKY	→	OUT SM4095	Create the program using the input device (X).
DHKY	→	OUT SM4095	
TKY	→	OUT SM4095	
DTKY	→	OUT SM4095	
ARWS	→	OUT SM4095	
RD3A	→	OUT SM4095	Correct the program to use FROM instruction.
RD3AP	→	OUT SM4095	Correct the program to use FROMP instruction.
WR3A	→	OUT SM4095	Correct the program to use TO instruction.
WR3AP	→	OUT SM4095	Correct the program to use TOP instruction.
LOADR	→	ERREAD*2	—
SAVER	→	OUT SM4095	Correct the program to use ERWRITE instruction.
INITR	→	OUT SM4095	Correct the program to use FMOV instruction. Correct the program to collectively initialize (clear to 0) the required number of points of the file register (R).
INITRP	→	OUT SM4095	Correct the program to use FMOVP instruction. Correct the program to collectively initialize (clear to 0) the required number of points of the file register (R).
LOGR	→	OUT SM4095	Use the data logging function. Save the collected data to the SD memory card as a CSV file or binary file. * The data cannot be stored in the file register (R) or the extension file register (ER) in the SD memory card.
LOGRP	→	OUT SM4095	
RWER	→	ERWRITE*2	—
RWERP	→	ERWRITE*2	—
INITER	→	ERINIT*2	—
INITERP	→	ERINIT*2	—

FX3 series	→	MELSEC iQ-F	Remarks
FLCRT	→	OUT SM4095	These instructions are not supported by MELSEC iQ-F. Therefore, it will be replaced with OUT SM4095.
FLDEL	→	OUT SM4095	
FLWR	→	OUT SM4095	
FLRD	→	OUT SM4095	
FLCMD	→	OUT SM4095	
FLSTRD	→	OUT SM4095	
ASC	→	OUT SM4095	

*1 For GX Works3 version 1.032J and later, the instructions will be replaced when a timer device is assigned to the global label.
*2 For GX Works3 version 1.038Q and earlier, the instructions will be replaced with OUT SM4095.

Precautions

When inline ST is used with the ladder program, instructions and devices can be replaced like ST programs. However, readout of the program may fail depending on the following conditions.

- If a syntax error exists
- If the program exceeds 2048 characters

If there is an instruction that is not supported by the MELSEC iQ-F Series in the program created using GX Works2, the instruction will be changed to the instruction using SM4095/SD4095.

Instruction replacement list for converting structured ladder to FBD/LD

■Replaced instructions

The following instructions will be replaced with GX Works3 compatible instructions when converting the project.

FX3 Series	→	MELSEC iQ-F	Remarks
OUT_C_32	→	OUT_C	—
OUT_T	→	OUT_T, OUTH, OUTHS • When the timer is 1 ms, it will be replaced with the OUTHS instruction. • When the timer is 10 ms, it will be replaced with the OUTH instruction. • When the timer is 100 ms, it will be replaced with the OUT_T instruction.	When a label is used instead of a timer device, the instructions will not be replaced.*1
RET	→	RETSTL	—
ROR	→	ROR_E	—
DROR	→	ROR_E	—
ROL	→	ROL_E	—
DROL	→	ROL_E	—
SQRP	→	SQRTP	—
DSQR	→	DSQRT	—
DSQRP	→	DSQRTP	—
FLT	→	INT2FLT	—
FLTP	→	INT2FLTP	—
DFLT	→	DINT2FLT	—
DFLTP	→	DINT2FLTP	—
SER	→	SERMM	—
SERP	→	SERMMP	—
DSER	→	DSERMM	—
DSERP	→	DSERMMP	—
RAMP	→	RAMPF	—
SORT	→	SORTTBL	—
HEX	→	HEXA	—
HEXP	→	HEXAP	—
INT	→	FLT2INT	—
INTP	→	FLT2INTP	—
DINT	→	FLT2DINT	—
DINTP	→	FLT2DINTP	—
SORT2	→	SORTTBL2	—
DSORT2	→	DSORTTBL2	—
DTBL	→	TBL	—
HOUR	→	HOURM	—
DHOUR	→	DHOURM	—
BK+	→	BKPLUS	—
BK+P	→	BKPLUSP	—
DBK+	→	DBKPLUS	—
DBK+P	→	DBKPLUSP	—
BK-	→	BKMINUS	—
BK-P	→	BKMINUSP	—
DBK-	→	DBKMINUS	—
DBK-P	→	DBKMINUSP	—
BKCMP=	→	BKCMP_EQ	—
BKCMP=P	→	BKCMP_EQP	—
DBKCMP=	→	DBKCMP_EQ	—
DBKCMP=P	→	DBKCMP_EQP	—
BKCMP>	→	BKCMP_GT	—

FX3 Series	→	MELSEC iQ-F	Remarks
BKCMP>P	→	BKCMP_GTP	—
DBKCMP>	→	DBKCMP_GT	—
DBKCMP>P	→	DBKCMP_GTP	—
BKCMP<	→	BKCMP_LT	—
BKCMP<P	→	BKCMP_LTP	—
DBKCMP<	→	DBKCMP_LT	—
DBKCMP<P	→	DBKCMP_LTP	—
BKCMP<>	→	BKCMP_NE	—
BKCMP<>P	→	BKCMP_NEP	—
DBKCMP<>	→	DBKCMP_NE	—
DBKCMP<>P	→	DBKCMP_NEP	—
BKCMP<=	→	BKCMP_LE	—
BKCMP<=P	→	BKCMP_LEP	—
DBKCMP<=	→	DBKCMP_LE	—
DBKCMP<=P	→	DBKCMP_LEP	—
BKCMP>=	→	BKCMP_GE	—
BKCMP>=P	→	BKCMP_GEP	—
DBKCMP>=	→	DBKCMP_GE	—
DBKCMP>=P	→	DBKCMP_GEP	—
$+	→	STRINGPLUS	—
$+P	→	STRINGPLUSP	—
$MOV	→	STRINGMOV	—
$MOVP	→	STRINGMOVP	—
LD=	→	LD_EQ	—
LDD=	→	LDD_EQ	—
LD>	→	LD_GT	—
LDD>	→	LDD_GT	—
LD<	→	LD_LT	—
LDD<	→	LDD_LT	—
LD<>	→	LD_NE	—
LDD<>	→	LDD_NE	—
LD<=	→	LD_LE	—
LDD<=	→	LDD_LE	—
LD>=	→	LD_GE	—
LDD>=	→	LDD_GE	—
AND=	→	AND_EQ	—
ANDD=	→	ANDD_EQ	—
AND>	→	AND_GT	—
ANDD>	→	ANDD_GT	—
AND<	→	AND_LT	—
ANDD<	→	ANDD_LT	—
AND<>	→	AND_NE	—
ANDD<>	→	ANDD_NE	—
AND<=	→	AND_LE	—
ANDD<=	→	ANDD_LE	—
AND>=	→	AND_GE	—
ANDD>=	→	ANDD_GE	—
OR=	→	OR_EQ	—
ORD=	→	ORD_EQ	—
OR>	→	OR_GT	—
ORD>	→	ORD_GT	—
OR<	→	OR_LT	—
ORD<	→	ORD_LT	—

FX3 Series	→	MELSEC iQ-F	Remarks
OR<>	→	OR_NE	—
ORD<>	→	ORD_NE	—
OR<=	→	OR_LE	—
ORD<=	→	ORD_LE	—
OR>=	→	OR_GE	—
ORD>=	→	ORD_GE	—
IVCK	→	IVCK	SM4095 is added to parameters of instructions. Change to an appropriate device or label.
IVDR	→	IVDR	
IVRD	→	IVRD	
IVWR	→	IVWR	
IVBWR	→	IVBWR	
IVMC	→	IVMC	
ADPRW	→	ADPRW	
LOADR	→	ERREAD*2	—
LOADRP	→	ERREAD*2	—
RWER	→	ERWRITE*2	—
RWERP	→	ERWRITE*2	—
INITER	→	ERINIT*2	—
INITERP	→	ERINIT*2	—
SQR	→	SQRT_E	These instructions will be converted to standard functions.
LEN	→	LEN_E	
RIGHT	→	RIGHT_E	
LEFT	→	LEFT_E	
LIMIT	→	LIMIT_E	
DLIMIT	→	LIMIT_E	
BOOL_TO_STR	→	BOOL_TO_STRING	—
BOOL_TO_STR_E	→	BOOL_TO_STRING_E	—
INT_TO_STR	→	INT_TO_STRING	—
INT_TO_STR_E	→	INT_TO_STRING_E	—
DINT_TO_STR	→	DINT_TO_STRING	—
DINT_TO_STR_E	→	DINT_TO_STRING_E	—
REAL_TO_STR	→	REAL_TO_STRING	—
REAL_TO_STR_E	→	REAL_TO_STRING_E	—
STR_TO_BOOL	→	STRING_TO_BOOL	—
STR_TO_BOOL_E	→	STRING_TO_BOOL_E	—
STR_TO_INT	→	STRING_TO_INT	—
STR_TO_INT_E	→	STRING_TO_INT_E	—
STR_TO_DINT	→	STRING_TO_DINT	—
STR_TO_DINT_E	→	STRING_TO_DINT_E	—
STR_TO_REAL	→	STRING_TO_REAL	—
STR_TO_REAL_E	→	STRING_TO_REAL_E	—
STR_TO_TIME	→	STRING_TO_TIME	—
STR_TO_TIME_E	→	STRING_TO_TIME_E	—
TIME_TO_STR	→	TIME_TO_STRING	—
TIME_TO_STR_E	→	TIME_TO_STRING_E	—
MAXIMUM	→	MAX	—
MAXIMUM_E	→	MAX_E	—
MINIMUM	→	MIN	—
MINIMUM_E	→	MIN_E	—
LIMITATION	→	LIMIT	—
LIMITATION_E	→	LIMIT_E	—

*1 For GX Works3 version 1.032J and later, the instructions will be replaced when a timer device is assigned to the global label.

*2 These instructions are supported by GX Works3 version 1.040S and later.

■Instructions that are not supported by GX Works3

The following instructions are not supported by GX Works3. The instructions are left as is when converting the projects, but an error will occur when compiling.

FX3 Series	→	MELSEC iQ-F	Remarks
CJ	→	CJ	—
CJP	→	CJP	—
CALL	→	CALL	—
CALLP	→	CALLP	—
SRET	→	SRET	—
IRET	→	IRET	—
FEND	→	FEND	—
REFF	→	REFF	Correct the program to use REF instruction.
REFFP	→	REFFP	Correct the program to use REFP instruction.
PLSR	→	PLSR	Correct the program to use DRVI instruction. Set the acceleration/deceleration time specified by the PLSR instruction operand as the acceleration time and deceleration time of SD.
DPLSR	→	DPLSR	Correct the program to use DDRVI instruction. Set the acceleration/deceleration time specified by the DPLSR instruction operand as the acceleration time and deceleration time of SD.
TKY	→	TKY	Create the program using the input device (X).
DTKY	→	DTKY	
HKY	→	HKY	
DHKY	→	DHKY	
ARWS	→	ARWS	
ASC	→	ASC	—
PR	→	PR	—
RS	→	RS	Correct the program to use RS2 instruction.
VRRD	→	VRRD	—
VRRDP	→	VRRDP	—
VRSC	→	VRSC	—
VRSCP	→	VRSCP	—
ZRN	→	ZRN	Correct the program to use DSZR instruction. Use the same device for near-point dog signal and zero point signal of the DSZR instruction, and set the zero point signal count start time to the rear end and the zero point signal count to 1.
DZRN	→	DZRN	Correct the program to use DDSZR instruction. Use the same device for near-point dog signal and zero point signal of the DDSZR instruction, and set the zero point signal count start time to the rear end and the zero point signal count to 1.
RD3A	→	RD3A	Correct the program to use FROM instruction.
RD3AP	→	RD3AP	Correct the program to use FROMP instruction.
WR3A	→	WR3A	Correct the program to use TO instruction.
WR3AP	→	WR3AP	Correct the program to use TOP instruction.
COMRD	→	COMRD	—
COMRDP	→	COMRDP	—
DHSCT	→	DHSCT	Set the high-speed comparison table or multi-point output high-speed comparison table in the module parameter "High-speed I/O".
SAVER	→	SAVER	Correct the program to use ERWRITE instruction.
INITR	→	INITR	Correct the program to use FMOV instruction. Correct the program to collectively initialize (clear to 0) the required number of points of the file register (R).
INITRP	→	INITRP	Correct the program to use FMOVP instruction. Correct the program to collectively initialize (clear to 0) the required number of points of the file register (R).

FX3 Series	→	MELSEC iQ-F	Remarks
LOGR	→	LOGR	Use the data logging function. Save the collected data to the SD memory card as a CSV file or binary file. * The data cannot be stored in the file register (R) or the extension file register (ER) in the SD memory card.
LOGRP	→	LOGRP	
FLCRT	→	FLCRT	—
FLDEL	→	FLDEL	—
FLWR	→	FLWR	—
FLRD	→	FLRD	—
FLCMD	→	FLCMD	—
FLSTRD	→	FLSTRD	—
GET_BIT_OF_INT	→	GET_BIT_OF_INT	—
GET_BIT_OF_INT_E	→	GET_BIT_OF_INT_E	—
SET_BIT_OF_INT	→	SET_BIT_OF_INT	—
SET_BIT_OF_INT_E	→	SET_BIT_OF_INT_E	—
CPY_BIT_OF_INT	→	CPY_BIT_OF_INT	—
CPY_BIT_OF_INT_E	→	CPY_BIT_OF_INT_E	—

Precautions

Even if the instructions are supported by GX Works3, a conversion error may occur due to factors such as the difference of the setting range between GX Works3 and the MELSEC FX3 series.
Instructions/FB/FUN that are not supported by the FBD/LD program will be undefined instructions/FB/FUN.

Instruction replacement list of ST programs

■Replaced instructions

The following instructions will be replaced with GX Works3 compatible instructions when converting the project.

FX3 Series	→	MELSEC iQ-F	Remarks
OUT_T	→	OUT_T, OUTH, OUTHS • When the timer is 1 ms, it will be replaced with the OUTHS instruction. • When the timer is 10 ms, it will be replaced with the OUTH instruction. • When the timer is 100 ms, it will be replaced with the OUT_T instruction.	When a label is used instead of a timer device, the instructions will not be replaced.*1
SQRP	→	SQRTP	—
DSQR	→	DSQRT	—
DSQRP	→	DSQRTP	—
SER	→	SERMM	—
SERP	→	SERMMP	—
DSER	→	DSERMM	—
DSERP	→	DSERMMP	—
RAMP	→	RAMPF	—
SORT	→	SORTTBL	—
HEX	→	HEXA	—
HEXP	→	HEXAP	—
SORT2	→	SORTTBL2	—
DSORT2	→	DSORTTBL2	—
HOUR	→	HOURM	—
DHOUR	→	DHOURM	—
IVCK	→	IVCK	SM4095 is added to parameters of instructions. Change to an appropriate device or label.
IVDR	→	IVDR	
IVRD	→	IVRD	
IVWR	→	IVWR	
IVBWR	→	IVBWR	
IVMC	→	IVMC	
ADPRW	→	ADPRW	
LOADR	→	ERREAD*2	—
LOADRP	→	ERREAD*2	—
RWER	→	ERWRITE*2	—
RWERP	→	ERWRITE*2	—
INITER	→	ERINIT*2	—
INITERP	→	ERINIT*2	—
SQR	→	SQRT_E	These instructions will be converted to standard functions.
LEN	→	LEN_E	
RIGHT	→	RIGHT_E	
LEFT	→	LEFT_E	
LIMIT	→	LIMIT_E	
DLIMIT	→	LIMIT_E	
BOOL_TO_STR	→	BOOL_TO_STRING	—
BOOL_TO_STR_E	→	BOOL_TO_STRING_E	—
INT_TO_STR	→	INT_TO_STRING	—
INT_TO_STR_E	→	INT_TO_STRING_E	—
DINT_TO_STR	→	DINT_TO_STRING	—
DINT_TO_STR_E	→	DINT_TO_STRING_E	—
REAL_TO_STR	→	REAL_TO_STRING	—
REAL_TO_STR_E	→	REAL_TO_STRING_E	—
STR_TO_BOOL	→	STRING_TO_BOOL	—

FX3 Series	→	MELSEC iQ-F	Remarks
STR_TO_BOOL_E	→	STRING_TO_BOOL_E	—
STR_TO_INT	→	STRING_TO_INT	—
STR_TO_INT_E	→	STRING_TO_INT_E	—
STR_TO_DINT	→	STRING_TO_DINT	—
STR_TO_DINT_E	→	STRING_TO_DINT_E	—
STR_TO_REAL	→	STRING_TO_REAL	—
STR_TO_REAL_E	→	STRING_TO_REAL_E	—
STR_TO_TIME	→	STRING_TO_TIME	—
STR_TO_TIME_E	→	STRING_TO_TIME_E	—
TIME_TO_STR	→	TIME_TO_STRING	—
TIME_TO_STR_E	→	TIME_TO_STRING_E	—
MAXIMUM	→	MAX	—
MAXIMUM_E	→	MAX_E	—
MINIMUM	→	MIN	—
MINIMUM_E	→	MIN_E	—
LIMITATION	→	LIMIT	—
LIMITATION_E	→	LIMIT_E	—

*1 For GX Works3 version 1.032J and later, the instructions will be replaced when a timer device is assigned to the global label.

*2 These instructions are supported by GX Works3 version 1.040S and later.

■Instructions that are not supported by GX Works3

The following instructions are not supported by GX Works3. The instructions are left as is when converting the projects, but an error will occur when compiling.

FX3 Series	→	MELSEC iQ-F	Remarks
OUT_C_32	→	OUT_C_32	Correct the program to use OUT_C instruction.
IRET	→	IRET	—
FEND	→	FEND	—
DROR	→	DROR	Correct the program to use ROR_E instruction.
DROL	→	DROL	Correct the program to use ROL_E instruction.
FLT	→	FLT	Correct the program to use INT2FLT instruction.
FLTP	→	FLTP	Correct the program to use INT2FLTP instruction.
DFLT	→	DFLT	Correct the program to use DINT2FLT instruction.
DFLTP	→	DFLTP	Correct the program to use DINT2FLTP instruction.
REFF	→	REFF	Correct the program to use REF instruction.
REFFP	→	REFFP	Correct the program to use REFP instruction.
PLSR	→	PLSR	Correct the program to use DRVI instruction. Set the acceleration/deceleration time specified by the PLSR instruction operand as the acceleration time and deceleration time of SD.
DPLSR	→	DPLSR	Correct the program to use DDRVI instruction. Set the acceleration/deceleration time specified by the DPLSR instruction operand as the acceleration time and deceleration time of SD.
TKY	→	TKY	Create the program using the input device (X).
DTKY	→	DTKY	
HKY	→	HKY	
DHKY	→	DHKY	
ARWS	→	ARWS	
ASC	→	ASC	—
PR	→	PR	—
RS	→	RS	Correct the program to use RS2 instruction.
VRRD	→	VRRD	—
VRRDP	→	VRRDP	—
VRSC	→	VRSC	—
VRSCP	→	VRSCP	—
INT	→	INT	Correct the program to use FLT2INT instruction.
INTP	→	INTP	Correct the program to use FLT2INTP instruction.
DINT	→	DINT	Correct the program to use FLT2DINT instruction.
DINTP	→	DINTP	Correct the program to use FLT2DINTP instruction.
DTBL	→	DTBL	Correct the program to use TBL instruction.
ZRN	→	ZRN	Correct the program to use DSZR instruction. Use the same device for near-point dog signal and zero point signal of the DSZR instruction, and set the zero point signal count start time to the rear end and the zero point signal count to 1.
DZRN	→	DZRN	Correct the program to use DDSZR instruction. Use the same device for near-point dog signal and zero point signal of the DDSZR instruction, and set the zero point signal count start time to the rear end and the zero point signal count to 1.
RD3A	→	RD3A	Correct the program to use FROM instruction.
RD3AP	→	RD3AP	Correct the program to use FROMP instruction.
WR3A	→	WR3A	Correct the program to use TO instruction.
WR3AP	→	WR3AP	Correct the program to use TOP instruction.
COMRD	→	COMRD	—
COMRDP	→	COMRDP	—
DHSCT	→	DHSCT	Set the high-speed comparison table or multi-point output high-speed comparison table in the module parameter "High-speed I/O".

FX3 Series	→	MELSEC iQ-F	Remarks
SAVER	→	SAVER	Correct the program to use ERWRITE instruction.
INITR	→	INITR	Correct the program to use FMOV instruction. Correct the program to collectively initialize (clear to 0) the required number of points of the file register (R).
INITRP	→	INITRP	Correct the program to use FMOVP instruction. Correct the program to collectively initialize (clear to 0) the required number of points of the file register (R).
LOGR	→	LOGR	Use the data logging function. Save the collected data to the SD memory card as a CSV file or binary file. * The data cannot be stored in the file register (R) or the extension file register (ER) in the SD memory card.
LOGRP	→	LOGRP	
FLCRT	→	FLCRT	—
FLDEL	→	FLDEL	—
FLWR	→	FLWR	—
FLRD	→	FLRD	—
FLCMD	→	FLCMD	—
FLSTRD	→	FLSTRD	—
MOD	→	MOD	Dividing 16-bit binary data. Correct the program to use ENO:=DIVISION(EN,s1,s2,d).

Precautions

Even if the instructions are supported by GX Works3, a conversion error may occur due to the difference of the setting range of the MELSEC FX3 series.

When a character string constant is used in the GX Works2 program, be aware of the following points.

- When the character string is enclosed with a double quotation ("), it will be replaced with a single quotation (').
- When using a (') and (") in the character string constant of GX Works3, it must be input as ($') and ($").

Appendix 2 Precautions for Instruction Replacement

When converting the projects of the FX3 Series to MELSEC iQ-F projects, the instructions may be changed or correction required. The details are explained below.

Arguments

■Arguments of function with "_E"

For functions with "_E", the positions of the arguments are different between GX Works2 and GX Works3. Therefore the projects must be modified after conversion.

- GX Works2: EN is specified by the first argument and "ENO" is the return value.
- GX Works3: EN is specified by the first argument, ENO is specified by the second argument, and the result is the return value. (The value is the same as function without "_E".)

■Data type of arguments

The required data type of arguments for some instructions, functions, function blocks of GX Works2, and the required data type of arguments for the instructions, functions, function blocks of GX Works3 are different. Therefore, an error may occur because of data type mismatch when reusing the program of GX Works2. In that case, modify the instruction name or arguments.

Ex.

INC instruction

- When handling a value exceeding 32767 (maximum value of word [signed]), replace to "INC_U".
- When word [unsigned]/bit array [16-bit] type label is specified for the parameter, replace to "INC_U".

■The number and order of arguments

The number and order of arguments of some instructions in GX Works2 is different from those of GX Works3. In that case, modify the arguments.

Ex.

(D)TO instruction

- GX Works2: (S)(n1)(n2)(n3)
- GX Works3: (UnHn)(s1)(s2)(n)

When the order of the arguments in GX Works2 is 1, 2, 3, and 4, the order in GX Works3 is 2, 3, 1, and 4.

■Argument requiring multiple points

When using a label as an argument that requires multiple points, use an array label having at least as many elements as required of the argument.

Instructions/FB/FUN that are not supported by the MELSEC iQ-F series

For the instructions/FB/FUN that are not supported by the MELSEC iQ-F Series, refer to the following manual to correct the program so that the instructions/FB/FUN will be equivalent to the one in the manual.

📖 MELSEC iQ-F FX5 Programming Manual (Instructions, Standard Functions/Function Blocks)

Instructions requiring additional actions for converting structured ladder to FBD/LD

The following instructions require action after the project conversion.

Instruction list			Action content
DHSCR	DSWAP	PLSV	The connecting position of the parameter is different from GX Works2. After replacing to FX5, select the appropriate instruction and perform "Edit"→"FB/FUN update" in the right-click menu, and then adjust the connecting position.
PLSY	DSWAPP	DPLSV	
DPLSY	DSZR	DRVI	
PWM	DVIT	DDRVI	
SWAP	DDVIT	DRVA	
SWAPP	DABS	DDRVA	
DHSCS_I			When an out of range "I" device is specified as parameter "i", parameter "i" will be replaced with P4095.

Correction of structured ladder/FBD program

- The method of thinking for execution order is different for the GX Works2 structured ladder/FBD and GX Works3 FBD/LD language. Display the execution order and check the contents.
- The operation of the return element is different for the GX Works2 structured ladder/FBD and GX Works3 FBD/LD language. For details of the return element of GX Works3, refer to the following.

📖 GX Works3 Operating Manual

- For the GX Works2 structured ladder/FBD and GX Works3 FBD/LD language, there are different cases in the input/output parameter numbers of the function parts/function block parts and the order. In this case, it will be displayed as an undefined FB/FUN. Select [Edit]→[FB/FUN update] to update the definition information, and correct the program.
- When the program is made to refer to a standard FB member in the GX Works2 structured ladder/FBD, a conversion error may occur after opening with GX Works3. In this case, check the member name and class of the standard FB, and correct the program.
- For the GX Works3 FBD/LD language, the input/output parameter of the function parts/function block elements can only be inverted. When elements other than the above are inverted for GX Works2 structured ladder/FBD, the connecting line of that element will be deleted. Correct the program so that the operation will be equal to GX Works2 structured ladder/FBD.
- For the GX Works3 FBD/LD language, the wired OR of the FBD elements are not supported. Correct the program so that the operation will be equal to GX Works2 structured ladder/FBD, or a conversion error will occur.
- When using the pointer branch instructions (CJ), jump, and sub routine program, a conversion error may occur. For details, refer to the following.

📖MELSEC iQ-F FX5 Programming Manual (Program Design)

- According to the difference of the GX Works2 structured ladder/FBD editor and GX Works3 FBD/LD editor, the layout of the program may change. Correct the layout appropriately.
- Ladder block label used in the GX Works2 structured ladder/FBD will be defined as a pointer type in local label.
- For GX Works3 FBD/LD language, the timer and counter device cannot reset by coil. Use the RST instruction.
- When the output of a function that executes on a pulse is connected to the input of another function, an error occurs. Receive the output by a device or label and then connect to the input.

Instructions requiring additional actions for replacement of ST program ones

The following instructions require settings after the project conversion.

FX3 Series	→	MELSEC iQ-F	Action content
DHSCS_I	→	DHSCS_I	When an out of range "I" device is specified as the fourth parameter, it will be replaced with OUT instructions.

Appendix 3 Device Replacement List

The device list when converting the MELSEC FX3 series projects to the MELSEC iQ-F projects are shown below.
Actions such as replacing the device will be necessary according to the content of precautions.

Device replacement list of FX3U, FX3UC → FX5U, FX5UC, FX5UJ

The device list when converting FX3U and FX3UC projects to MELSEC iQ-F (FX5U, FX5UC, and FX5UJ) projects is shown below.
Actions such as replacing the device will be necessary according to the content of precautions.

Device name		FX3U, FX3UC	After conversion to the FX5U, FX5UC, or FX5UJ	Precautions	
				In the case of FX5U and FX5UC	In the case of FX5UJ
Input relay		X0 to X367	X0 to X367	—	—
Output relay		Y0 to Y367	Y0 to Y367	—	—
Auxiliary relay	For general use	M0 to M499	M0 to M499	—	M384 to M499 are latch devices, so reset these devices as necessary. (📖 MELSEC iQ-F FX5 Programming Manual (Instructions, Standard Functions/Function Blocks))
	For keeping*1	M500 to M7679	M500 to M7679	—	—
	For special use	M8000 to M8511	SM0 to SM8511	Refer to ☞ Page 162 SM/SD device replacement.	Refer to ☞ Page 162 SM/SD device replacement.
State	For initial state (for general use)	S0 to S9	S0 to S9	When the device is used in the SFC program, it will be replaced with a step relay (BL□\S□) with block specification.	S0 to S499 are latch devices, so reset these devices as necessary. (📖 MELSEC iQ-F FX5 Programming Manual (Instructions, Standard Functions/Function Blocks))
	For general use	S10 to S499	S10 to S499		
	For keeping*1	S500 to S4095	S500 to S4095		—
	For annunciator (when using ANS instructions)	ANS S900 to S999	ANS F900 to F999	If necessary, replace the device number or change the device range. When the ANS instruction is not used, but these devices are used as an annunciator, these devices must be replaced with F devices. (📖 MELSEC iQ-F FX5 User's Manual (Application))	If necessary, replace the device number. When the ANS instruction is not used, but these devices are used as an annunciator, these devices must be replaced with F devices. (📖 MELSEC iQ-F FX5 User's Manual (Application))
	For annunciator (when not using ANS instructions)	S900 to S999	S900 to S999		

Device name		FX3U, FX3UC	After conversion to the FX5U, FX5UC, or FX5UJ	Precautions	
				In the case of FX5U and FX5UC	In the case of FX5UJ
Timer	100 ms	OUT T T0 to T191	OUT T T0 to T191	—	—
	100 ms Routine timer	OUT T T192 to T199	OUT T T192 to T199	The routine timer must be set by the parameter. (FX5U: Refer to ☞ Page 56 Precautions when using the routine timer. FX5UC: Refer to ☞ Page 135 Precautions when using the routine timer.)	The routine timer must be set by the parameter. (Refer to ☞ Page 31 Precautions when using the routine timer.)
	10 ms	OUT T T200 to T245	OUTH T T200 to T245	—	—
	1 ms accumulated type	OUT T T246 to T249	OUTHS ST ST0 to ST3	—	—
	100 ms accumulated type	OUT T T250 to T255	OUT ST ST4 to ST9	—	—
	1 ms	OUT T T256 to T511	OUTHS T T256 to T511	—	—
	Contact	TS0 to TS245 and TS256 to TS511	TS0 to TS245 and TS256 to TS511	—	—
		TS246 to TS255	STS0 to STS9	—	—
	Coil	TC0 to TC245 and TC256 to TC511	TC0 to TC245 and TC256 to TC511	—	—
		TC246 to TC255	STC0 to STC9	—	—
	Current value	TN0 to TN245 and TN256 to TN511	TN0 to TN245 and TN256 to TN511	—	—
		TN246 to TN255	STN0 to STN9	—	—
Counter	16-bit up counter for general use	C0 to C99	C0 to C99	—	C16 to C99 are latch devices, so reset these devices as necessary. (📖 MELSEC iQ-F FX5 Programming Manual (Instructions, Standard Functions/Function Blocks))
	16-bit up counter for keep*1	C100 to C199	C100 to C199	—	—
	32-bit bidirectional counter for general use	C200 to C219	LC0 to LC19	—	—
	32-bit bidirectional counter for keep*1	C220 to C234	LC20 to LC34	—	—
	Contact	CS0 to CS199	CS0 to CS199	—	—
		CS200 to CS234	LCS0 to LCS34	—	—
	Coil	CC0 to CC199	CC0 to CC199	—	—
		CC200 to CC234	LCC0 to LCC34	—	—
	Current value	CN0 to CN199	CN0 to CN199	—	—
		CN200 to CN234	LCN0 to LCN34	—	—

A

Device name		FX3U, FX3UC	After conversion to the FX5U, FX5UC, or FX5UJ	Precautions	
				In the case of FX5U and FX5UC	In the case of FX5UJ
High-speed counter	1-phase 1-count input	C235 to C245	C235 to C245	Setting of the FX3 series compatibility assignment and replacement of the device number are necessary by the parameter. (FX5U: Refer to ☞ Page 55 Precautions when using the high-speed counters. FX5UC: Refer to ☞ Page 97 Precautions when using the high-speed counters.)	Setting of the FX3 series compatibility assignment and replacement of the device number are necessary by the parameter. (Refer to ☞ Page 29 Precautions when using the high-speed counters.)
	1-phase 2-count input	C246 to C250	C246 to C250		
	2-phase 2-count input	C251 to C255	C251 to C255		
	Contact	CS235 to CS255	CS235 to CS255	—	—
	Coil	CC235 to CC255	CC235 to CC255	—	—
	Current value	CN235 to CN255	CN235 to CN255	—	—
Data register	For general use	D0 to D199	D0 to D199	—	D128 to D199 are latch devices, so reset these devices as necessary. (📖 MELSEC iQ-F FX5 Programming Manual (Instructions, Standard Functions/Function Blocks))
	For keeping*1	D200 to D7999	D200 to D7999	—	—
	For special use	D8000 to D8511	SD0 to SD8511	Refer to ☞ Page 162 SM/SD device replacement.	Refer to ☞ Page 162 SM/SD device replacement.
	File register	File register D1000 to D7999	—	Substitution is possible by using the device initial value function.	Substitution is possible by using the device initial value function.
Index register	16-bit Z device	Z0 to Z7	Z0 to Z7	—	—
	16-bit V device	V0 to V7	Z10 to Z17	—	—
	32-bit Z device (at modification of direct value)	Z0 to Z7	Z0 to Z7	If necessary, replace the direct value modification with an LZ device.	If necessary, replace the direct value modification with an LZ device.
Extension register		R0 to R32767	R0 to R32767	To latch data, the battery mode setting is necessary.*2	To latch data, check whether it can be supported by latch devices other than extension registers or by extension file registers.
Extension file register		ER0 to ER32767	ER0 to ER32767	For GX Works3 versions earlier than 1.040S, the device number will be replaced with OUT SM4095.	—
Pointer	Normal pointer	P0 to P4095 (except P63)	■FX5U/FX5UC P0 to P4095 (except P63) ■FX5UJ P0 to P2047 (except P63)	If necessary, replace the device number or change the device range. (📖 MELSEC iQ-F FX5 User's Manual (Application))	If necessary, replace the device number. (📖 MELSEC iQ-F FX5 User's Manual (Application))
	END pointer	P63	GOEND	—	—

Device name		FX3U, FX3UC	After conversion to the FX5U, FX5UC, or FX5UJ	Precautions	
				In the case of FX5U and FX5UC	In the case of FX5UJ
Interrupt pointer*3	Input interrupt (delay interrupt)	I00□ I10□ I20□ I30□ I40□ I50□	I0 to I5	Replaced as follows.*4 I00□→I0 I10□ → I1 I20□ → I2 I30□ → I3 I40□ → I4 I50□ → I5 □ = 1: Rise interrupt □ = 0: Fall interrupt When □ is 2 to 9, it will be replaced with P4095. The MELSEC iQ-F Series does not support the delay interrupt function. (There is no recommended substitute function.)	Replaced as follows.*4 I00□→I0 I10□ → I1 I20□ → I2 I30□ → I3 I40□ → I4 I50□ → I5 □ = 1: Rise interrupt □ = 0: Fall interrupt When □ is 2 to 9, it will be replaced with P4095. The MELSEC iQ-F Series does not support the delay interrupt function. (There is no recommended substitute function.)
	Timer interrupt	I6□□ I7□□ I8□□	I28 to I30	Replaced as follows.*5 I6□□→I28 I7□□ → I29 I8□□ → I30 □□ = 1 to 99: Execution interval (ms)	Replaced as follows.*5 I6□□→I28 I7□□ → I29 I8□□ → I30 □□ = 1 to 99: Execution interval (ms)
	Counter interrupt	I010 I020 I030 I040 I050 I060	I16 to I21	Replaced as follows. I010 → I16 I020 → I17 I030 → I18 I040 → I19 I050 → I20 I060 → I21	Replaced as follows. I010 → I16 I020 → I17 I030 → I18 I040 → I19 I050 → I20 I060 → I21
Module access device		Module number (0 to 7) BFM number (0 to 32766)	■FX5U/FX5UC • Module number (1 to 16) • BFM number (0 to 65535) ■FX5UJ • Module number (1 to 8) • BFM number (0 to 65535)	The conversion method can be selected. (FX5U: Refer to ☞ Page 59 Precautions when replacing other functions. FX5UC: Refer to ☞ Page 101 Precautions when replacing other functions.)	The conversion method can be selected. (Refer to ☞ Page 25 Operation method for replacing projects.)
Decimal constant		16-bit: K-32768 to K32767 32-bit: K-2147483648 to K2147483647	16-bit: K-32768 to K32767 32-bit: K-2147483648 to K2147483647	—	—
Hexadecimal constant		16-Bit: H0 to HFFFF 32-Bit: H0 to HFFFFFFFF	16-Bit: H0 to HFFFF 32-Bit: H0 to HFFFFFFFF	—	—
Real constant		-1.0×2^{128} to -1.0×2^{-126}, 0, 1.0×2^{-126} to 1.0×2^{128}	-1.0×2^{128} to -1.0×2^{-126}, 0, 1.0×2^{-126} to 1.0×2^{128}	—	—
Character string constant		32 single-byte characters	255 single-byte characters	—	—

*1 When the latch range of the device for keep of the FX3 Series is changed, if necessary, change the latch range or reset the devices. The changing of the latch range is only supported by the FX5U/FX5UC.

*2 Set the parameter with "Option Battery Setting" under [Parameter] ⇨ [FX5UCPU] ⇨ [CPU Parameter] ⇨ [Memory/Device Setting] ⇨ [Device/Label Memory Area Setting].

*3 Set the interrupt setting by the parameter accordingly.

*4 The parameter is reflected in [Parameter] ⇨ [FX5UCPU] or [FX5UJCPU] ⇨ [Module Parameter] ⇨ [High Speed I/O] ⇨ [Input Function] ⇨ [General/Interrupt/Pulse Catch].
Also, the parameter is reflected in [Module Parameter] ⇨ [Input Response Time Setting].

*5 The parameter is reflected in [Parameter] ⇨ [FX5UCPU] or [FX5UJCPU] ⇨ [CPU Parameter] ⇨ [Interrupt Settings] ⇨ [Fixed Interval Setting].

Device replacement list of FX3G, FX3GE → FX5S, FX5UJ

The device list when FX3G/FX3GE projects are converted to FX5S/FX5UJ projects is shown below.

Actions such as replacing the device will be necessary according to the content of precautions.

Device name		FX3G/FX3GE	After conversion to the FX5S/FX5UJ	Precautions
Input relay		X0 to X177	X0 to X177	—
Output relay		Y0 to Y177	Y0 to Y177	—
Auxiliary relay	For general use	M0 to M383 M1536 to M7679	For general use: M0 to M383	—
			For keep: M384 to M7679	M1536 to M7679 are latch devices, so reset these devices as necessary. (📖 MELSEC iQ-F FX5 Programming Manual (Instructions, Standard Functions/Function Blocks))
	For keeping	M384 to M1535		—
	For special use	M8000 to M8511	SM0 to SM8511	Refer to ☞ Page 162 SM/SD device replacement.
State	For initial state (for keep)	S0 to S9	S0 to S9	—
	For general use	S1000 to S4095	For keep: S1000 to S4095	S1000 to S4095 are latch devices, so reset these devices as necessary. (📖 MELSEC iQ-F FX5 Programming Manual (Instructions, Standard Functions/Function Blocks))
	For keeping	S10 to S899	S10 to S899	—
	For annunciator (when using ANS instructions)	ANS S900 to S999	ANS F900 to F999	If necessary, replace the device number. When the ANS instruction is not used, but these devices are used as an annunciator, these devices must be replaced with F devices. (📖 MELSEC iQ-F FX5 User's Manual (Application))
	For annunciator (when not using ANS instructions)	S900 to S999	S900 to S999	
Timer	100 ms	OUT T T0 to T191	OUT T T0 to T191	—
	100 ms Routine timer	OUT T T192 to T199	OUT T T192 to T199	The routine timer must be set by the parameter. (Refer to ☞ Page 117 Precautions when using the routine timer.)
	10 ms	OUT T T200 to T245	OUTH T T200 to T245	—
	1 ms accumulated type	OUT T T246 to T249	OUTHS ST ST0 to ST3	—
	100 ms accumulated type	OUT T T250 to T255	OUT ST ST4 to ST9	—
	1 ms	OUT T T256 to T319	OUTHS T T256 to T319	—
	Contact	TS0 to TS245, TS256 to TS319	TS0 to TS245, TS256 to TS319	—
		TS246 to TS255	STS0 to STS9	—
	Coil	TC0 to TC245, TC256 to TC319	TC0 to TC245, TC256 to TC319	—
		TC246 to TC255	STC0 to STC9	—
	Current value	TN0 to TN245, TN256 to TN319	TN0 to TN245, TN256 to TN319	—
		TN246 to TN255	STN0 to STN9	—

Device name		FX3G/FX3GE	After conversion to the FX5S/FX5UJ	Precautions
Counter	16-bit up counter for general use	C0 to C15	C0 to C15	—
	16-bit up counter for keep	C16 to C199	C16 to C199	—
	32-bit bidirectional counter for general use	C200 to C219	LC0 to LC19	—
	32-bit bidirectional counter for keep	C220 to C234	LC20 to LC34	—
	Contact	CS0 to CS199	CS0 to CS199	—
		CS200 to CS234	LCS0 to LCS34	—
	Coil	CC0 to CC199	CC0 to CC199	—
		CC200 to CC234	LCC0 to LCC34	—
	Current value	CN0 to CN199	CN0 to CN199	—
		CN200 to CN234	LCN0 to LCN34	—
High-speed counter	1-phase 1-count input	C235 to C245	C235 to C245	Setting of the FX3 Series compatibility assignment and replacement of the device number are necessary by the parameter. (☞ Page 55 Precautions when using the high-speed counters)
	1-phase 2-count input	C246 to C250	C246 to C250	
	2-phase 2-count input	C251 to C255	C251 to C255	
	Contact	CS235 to CS255	CS235 to CS255	—
	Coil	CC235 to CC255	CC235 to CC255	—
	Current value	CN235 to CN255	CN235 to CN255	—
Data register	For general use	D0 to D127 D1100 to D7999	For general use: D0 to D127	—
			For keep: D128 to D7999	D1100 to D7999 are latch devices, so reset these devices as necessary. (📖 MELSEC iQ-F FX5 Programming Manual (Instructions, Standard Functions/Function Blocks))
	For keeping	D128 to D1099		—
	For special use	D8000 to D8511	SD0 to SD8511	Refer to ☞ Page 162 SM/SD device replacement.
	File register	File register D1000 to D7999	—	Substitution is possible by using the device initial value function.
Index register	16-bit Z device	Z0 to Z7	Z0 to Z7	—
	16-bit V device	V0 to V7	Z10 to Z17	—
	32-bit Z device (at modification of direct value)	Z0 to Z7	Z0 to Z7	If necessary, replace the direct value modification with an LZ device.
Extension register		R0 to R23999	R0 to R23999	To latch data, check whether it can be supported by latch devices other than extension registers or by extension file registers.
Extension file register		ER0 to ER23999	ER0 to ER23999	—
Pointer	Normal pointer	P0 to P2047 (except P63)	P0 to P2047 (except P63)	If necessary, replace the device number. (📖 MELSEC iQ-F FX5 User's Manual (Application))
	END pointer	P63	GOEND	—

A

Device name		FX3G/FX3GE	After conversion to the FX5S/FX5UJ	Precautions
Interrupt pointer[*1]	Input interrupt (delay interrupt)	I00□ I10□ I20□ I30□ I40□ I50□	I0 to I5	Replaced as follows.[*2] I00□→I0 I10□ → I1 I20□ → I2 I30□ → I3 I40□ → I4 I50□ → I5 □ = 1: Rise interrupt □ = 0: Fall interrupt When □ is 2 to 9, it will be replaced with P4095. The MELSEC iQ-F Series does not support the delay interrupt function. (There is no recommended substitute function.)
	Timer interrupt	I6□□ I7□□ I8□□	I28 to I30	Replaced as follows.[*3] I6□□→I28 I7□□ → I29 I8□□ → I30 □□ = 1 to 99: Execution interval (ms)
	Counter interrupt	I010 I020 I030 I040 I050 I060	I16 to I21	Replaced as follows. I010 → I16 I020 → I17 I030 → I18 I040 → I19 I050 → I20 I060 → I21
Module access device		Module number (0 to 7) BFM number (0 to 32766)	Module number (1 to 8) BFM number (0 to 65535)	The conversion method can be selected. (Refer to ☞ Page 51 Operation method for replacing projects.)
Decimal constant		16-bit: K-32768 to K32767 32-bit: K-2147483648 to K2147483647	16-bit: K-32768 to K32767 32-bit: K-2147483648 to K2147483647	—
Hexadecimal constant		16-Bit: H0 to HFFFF 32-Bit: H0 to HFFFFFFFF	16-Bit: H0 to HFFFF 32-Bit: H0 to HFFFFFFFF	—
Real constant		-1.0×2^{128} to -1.0×2^{-126}, 0, 1.0×2^{-126} to 1.0×2^{128}	-1.0×2^{128} to -1.0×2^{-126}, 0, 1.0×2^{-126} to 1.0×2^{128}	—
Character string constant		32 single-byte characters	255 single-byte characters	—

*1 Set the interrupt setting by the parameter accordingly.

*2 The parameter is reflected in [Parameter] ⇨ [FX5UJCPU] ⇨ [Module Parameter] ⇨ [High Speed I/O] ⇨ [Input Function] ⇨ [General/Interrupt/Pulse Catch].
Also, the parameter is reflected in [Module Parameter] ⇨ [Input Response Time Setting].

*3 The parameter is reflected in [Parameter] ⇨ [FX5UJCPU] ⇨ [CPU Parameter] ⇨ [Interrupt Settings] ⇨ [Fixed Interval Setting].

Appendix 4 Precautions for Device Replacement

Precautions for device replacement

When the firmware version of FX5U/FX5UC CPU module is earlier than 1.220 and the version of GX Works3 is earlier than 1.070Y or when FX5UJ CPU module is used, the S devices cannot be index-modified. Replace as follows. For other precautions, refer to the 📖MELSEC iQ-F FX5 Programming Manual (Program Design).

- When the S device without state management has its index modified, replace to M device to use.
- When the S device used for state management has its index modified and used for the ZRST instructions, program the ZRST instructions for each batch-clear pattern.

For GX Works3 whose version is earlier than 1.030G, the assigned device of the global label cannot be read out.

- Information of the assigned device in GX Works2 is input in the comment field. Refer to the comment field to assign the device again.
- When special M and special D have been assigned, they will be replaced and assigned to SM and SD.

If S device is set to the device memory data or device initial data created using GX Works2, it will be deleted.

If there is a device that is not supported by the MELSEC iQ-F Series in the program created using GX Works2, the device will be changed to SM4095/SD4095.

The default value is set to the parameter setting of device points.

A

SM/SD device replacement

For the MELSEC FX3 series, devices for M8000 and later will be changed to those for SM8000 and later, and devices for D8000 and later will be changed to those for SD8000 and later. However, some devices may be changed depending on the version of GX Works3. For details, refer to the following.

MELSEC FX3 series	After replacement of MELSEC iQ-F	
	GX Works3 version 1.032J or earlier	GX Works3 version 1.035M or later
M8004	SM8004	SM0
M8009	SM8009	SM0
M8061	SM8061	SM0
M8064	SM8064	SM0
M8065	SM8065	SM0
M8066	SM8066	SM0
M8091	SM8091	SM701
M8131	SM8131	SM5001
M8133	SM8133	SM5001
M8138	SM8138	SM5001
M8139	SM8139	SM5000
M8165	SM8165	SM703
M8235	SM8235	SM4580
M8236	SM8236	SM4581
M8237	SM8237	SM4582
M8238	SM8238	SM4583
M8239	SM8239	SM4584
M8240	SM8240	SM4585
M8241	SM8241	SM4580
M8242	SM8242	SM4582
M8243	SM8243	SM4584
M8244	SM8244	SM4580
M8245	SM8245	SM4582
M8318	SM8318	SM0
M8489	SM8489	SM0
D8004	SD8004	SD0
D8009	SD8009	SD0
D8061	SD8061	SD0
D8064	SD8064	SD0
D8065	SD8065	SD0
D8066	SD8066	SD0
D8101	SD8101	SD8001
D8166	SD8166	SD83
D8489	SD8489	SD0

Appendix 5 Conversion of the SFC Program

Below are described the procedure and precautions for converting FX3U/FX3UC projects created with the SFC program into FX5U/FX5UC projects.
After converting the projects, it may be necessary to adjust the programs (instructions, devices) and parameters.

Point

This chapter describes the SFC program operations and specifications. For information not contained in this chapter, refer to the following.
GX Works3 Operating Manual
MELSEC iQ-F FX5 User's Manual (Application)
MELSEC iQ-F FX5 Programming Manual (Program Design)

Differences in specifications after replacement

The differences in specifications of the SFC program between FX3U/FX3UC and FX5U/FX5UC are shown below.

Classification	Item		FX3U/FX3UC	FX5U/FX5UC
SFC program	Number of simultaneously activated steps	In 1 block	512 steps	128 steps*1
		Whole system	4096 steps	128 steps*2
SFC operation	SFC operation mode when power is turned off and on or reset	Resume start	○	○*3
Transition control	Transition condition	Reset jump	○	×*4
SFC control instructions	Execution of SFC control instructions in interrupt program		○	×
Monitor	Monitoring by special device	SM8046 (STL operation)	○	×
		SM8047 (STL monitor enabled), SD8040 to SD8047 (ON state numbers)	○	×

*1 When the number of steps exceeds 128, a stop error (31B3H) will occur.
*2 When the number of steps exceeds 128, a stop error (31B4H) will occur.
*3 After replacement, the setting is "Initial Start". To use "Resume Start", it is necessary to change the parameter and install the optional battery.
*4 If a reset jump is contained in an FX3U/FX3UC project, the reset jump will be replaced with an end step when the project is replaced with an FX5U/FX5UC project.

A

Operation method for replacing projects

To convert FX3U/FX3UC projects to FX5U/FX5UC projects, perform operations in GX Works3.

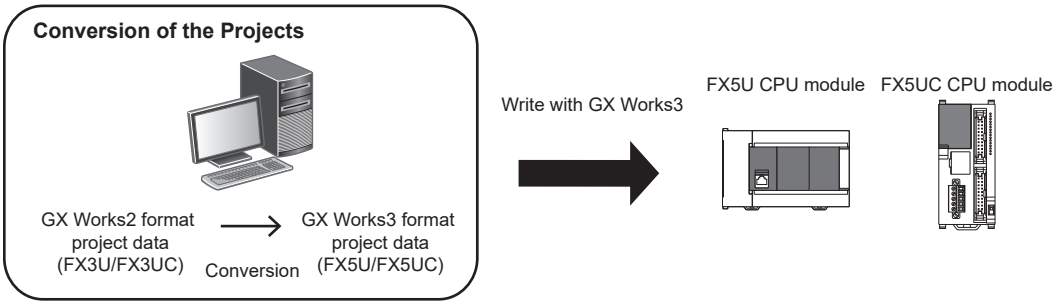

The SFC program is compatible with the following versions.

Item	Specification
Compatible CPU module	FX5U/FX5UC CPU module (Ver. 1.220 or later)
Compatible engineering tool	GX Works3 (Ver. 1.070Y or later)*1

*1 To convert FX3U/FX3UC projects created with the SFC program into FX5U/FX5UC projects, it is necessary to install GX Works2 whose version is 1.585K or later.

Precautions

- To read projects of GX Works2 using GX Works3, convert beforehand using GX Works2, and then read the projects. Even for projects converted using GX Works2, conversion may not be performed according to the state of the project. If there is an error in the program, operation will be canceled.
- To read projects of GX Works2 using GX Works3, delete the security (user Management, data security setting) of GX Works2 beforehand and then read the projects. If the security is set to the GX Works2 project, read out will be canceled.
- To read projects of GX Works2 using GX Works3, administrator rights are required.

Operating procedure

1. Start up GX Works3.

2. Open the project of FX3U/FX3UC.

Select [Project] ⇨ [Open Other Format File] ⇨ [GX Works2 Format] ⇨ [Open Project] ⇨ Project (***.gxw).

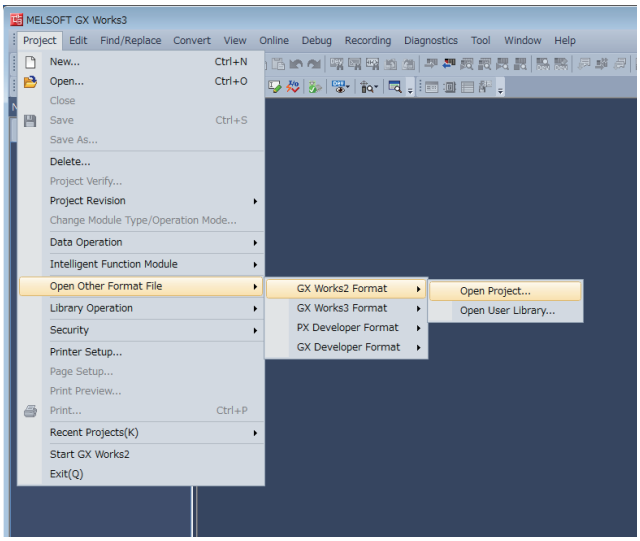

3. The following display is shown.

A selection screen of the following new module type and conversion method is shown.

Select the new module type and conversion method, and press the [Execute] button.

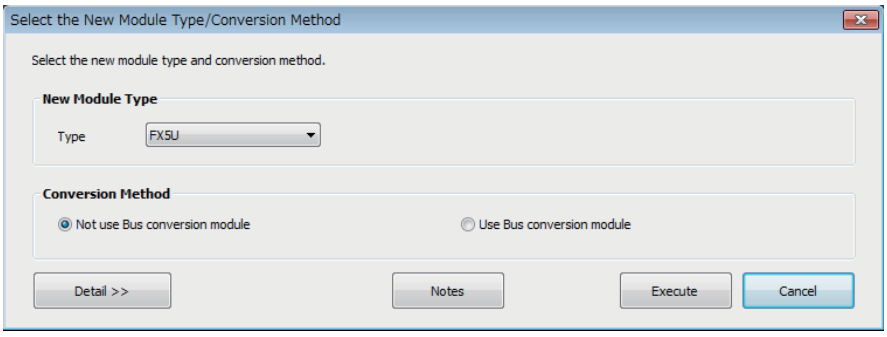

Point

- The display contents may vary depending on the version of the software.
- Precautions for the converted project are displayed. Please read carefully through the contents before use.

4. When conversion is completed, the following message is shown.

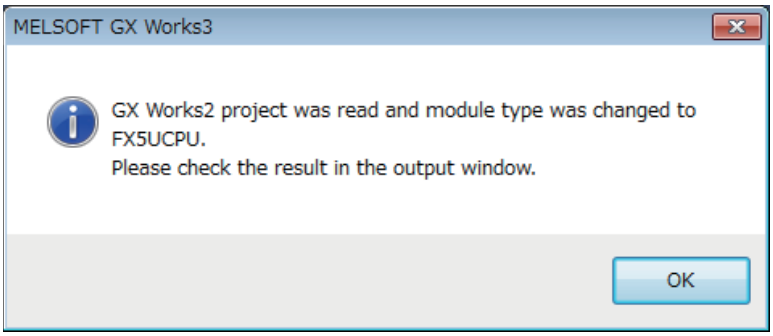

5. Check the contents of the model change result in the "Output window".

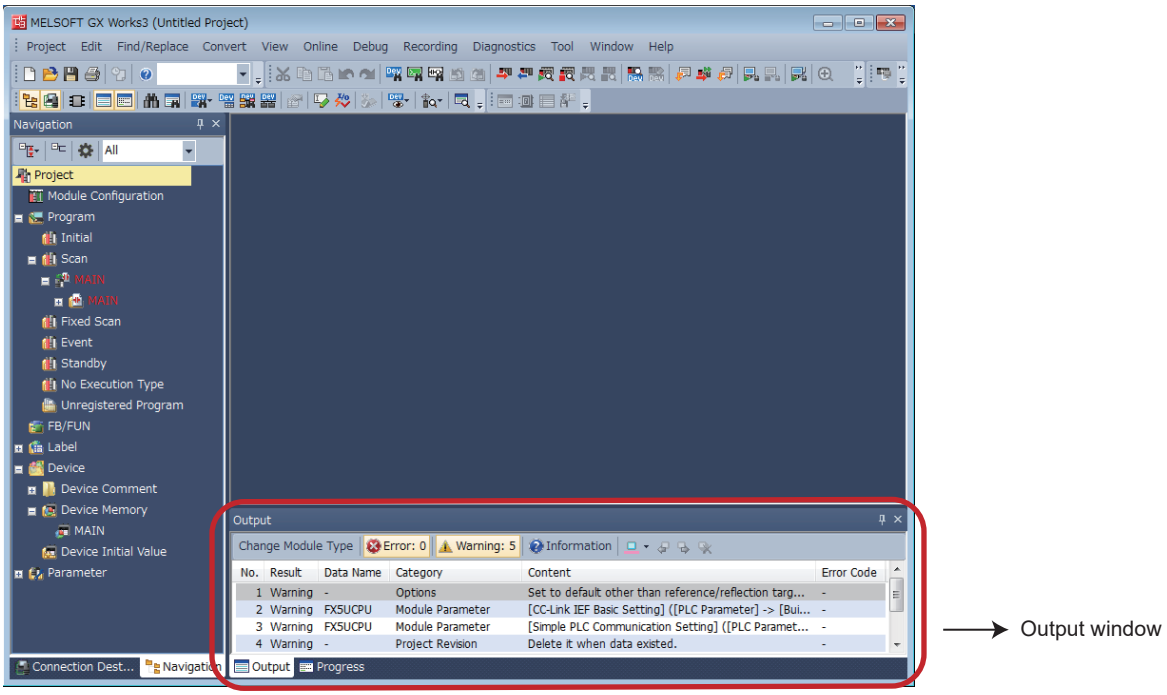

Precautions

When projects are converted, the program instructions and devices may be changed. Check the contents of the project. Parameters other than the network parameter of CC-Link[*1] will be deleted. Set the parameters if necessary.

*1 For the network parameters of CC-Link, refer to ☞ Page 167 Precautions when replacing the parameters.

6. Set the model name of the CPU for the system parameter.

[System Parameter] ⇨ [I/O Assignment Setting] ⇨ Model Name

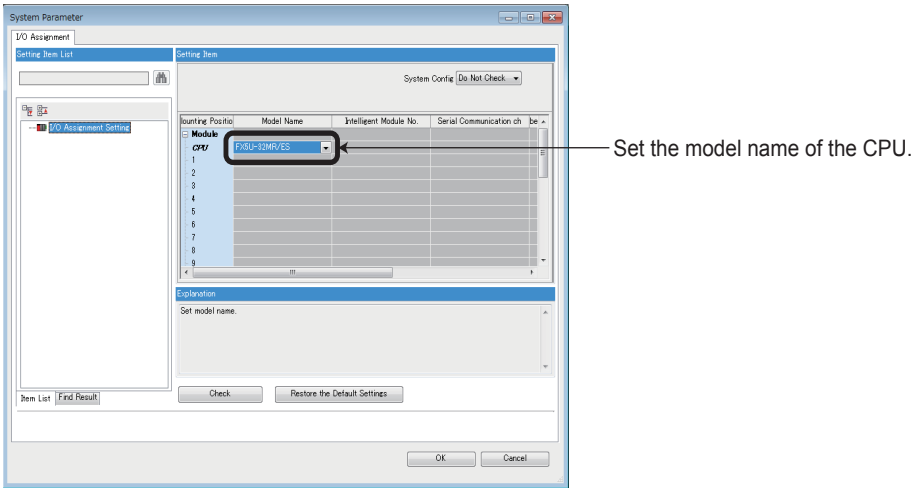

7. Perform conversion.

[Convert] ⇨ [Rebuild All]

Precautions when converting the projects

The number of simultaneously activated steps varies between FX3U/FX3UC and FX5U/FX5UC.

Item	FX3U/FX3UC	FX5U/FX5UC
Number of simultaneously activated steps	• Up to 512 steps in 1 block • Up to 4096 steps in the whole system	• Up to 128 steps in 1 block*1 • Up to 128 steps in the whole system*2

*1 When the number of steps exceeds 128, a stop error (31B3H) will occur.
*2 When the number of steps exceeds 128, a stop error (31B4H) will occur.

Precautions when replacing the parameters

- When converting FX3U/FX3UC projects to FX5U/FX5UC projects, the setting data of the parameters (PC parameters and network parameters) and special modules (intelligent function modules) will be deleted. Therefore, it is necessary to set the data with GX Works3 again. Also, GX Works3 does not support the following parameters of the FX3U/FX3UC, so it is necessary to set these parameters with GX Works3 again.

- Network parameters (CC-Link)
- Intelligent function module parameter (AnyWireASLINK)

- The "SFC Setting" of "CPU Parameter" of GX Works3 is shown below. Change the parameters if necessary. For the parameter details, refer to the following.

MELSEC iQ-F FX5 Programming Manual (Program Design)

Item	Value after replacement	Setting range
SFC Program Setting	Use	• Not to use (default) • Use
SFC Program Start Mode*1	Initial Start	• Initial Start (default) • Resume Start
Start Conditions	Do not auto-start block 0	• Auto-start block 0 (default) • Do not auto-start block 0
FX3 Compatible Transition Operation Mode	Enable	• Disable (default) • Enable

*1 If there is any step to be held in an active state, change the mode to "Resume Start". If the program is resumed, the active state at the previous stop (when SM321 is turned on and off, or the CPU module power is turned off and on or reset) can be held. For "Resume Start", the optional battery is required.

Precautions when replacing the program

- When MELSEC iQ-F uses the SFC program, a step relay (S) cannot be specified in any instruction other than the SFC control instructions. The SFC control instructions cannot be used in an interrupt program. After replacement, reexamine the program. For details on the SFC control instructions, refer to the MELSEC iQ-F FX5 Programming Manual (Program Design).
- GX Works3 cannot make setting only with output without describing contacts in Zoom. Therefore, "LD SM400" is added to a circuit block without contacts.
- The step relay (S) of FX3U/FX3UC is replaced with a step relay with block specification (BL□\S□) on FX5U/FX5UC. The device comment is registered as the device comment of the step relay with block specification (BL□\S□) after replacement.
- When an FX3U/FX3UC project is converted into an FX5U/FX5UC project, the step relays (S) will be automatically reallocated. Therefore, when the step relays (S) of FX3U/FX3UC are used in an instruction intended for index modification, digit specification and multiple devices, reexamine the instruction after replacement.
- A step relay (S) not assigned to any step is replaced with "SM4095".
- A step relay (S) used for digit specification is replaced with "SD4095".
- When a ladder block is contained in an FX3U/FX3UC project, an initial execution type program is automatically added. The initial execution type program is created to start the SFC block that takes over the content of the ladder block.

GX Works2	GX Works3 (after reading another format)
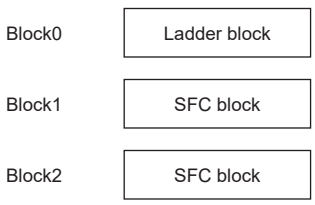	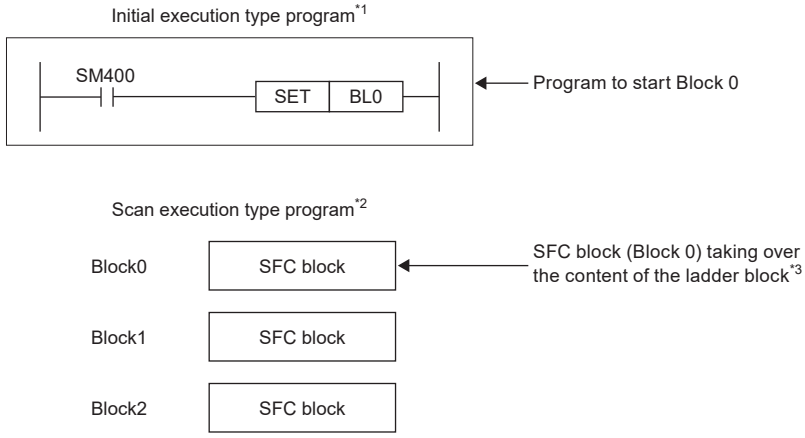

*1 The program is executed only once when the CPU module is switched from STOP/PAUSE to RUN.
*2 The program is executed only once per scan after the initial execution type program is executed.
*3 When "LD M8002" is used in the ladder block in an FX3U/FX3UC project, change "LDSM8002" to "LDP SM8003" as shown below after replacing with GX Works3.



- After replacement with GX Works3, the ladder block will be replaced with an initial step + disabled transition + a jump.

GX Works2	GX Works3 (after reading another format)
	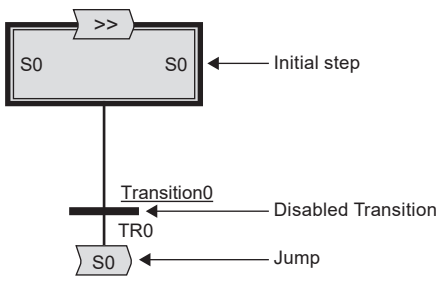

• After replacement with GX Works3, a jump to the initial steps (S0 to S9) of other blocks will be replaced with a block start step (without end check) [BS] + unconditional transition + an end step. The block start step will be added as the maximum step No. in own block + 1.

GX Works2	GX Works3 (after reading another format)
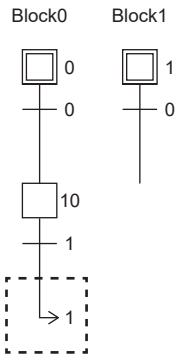	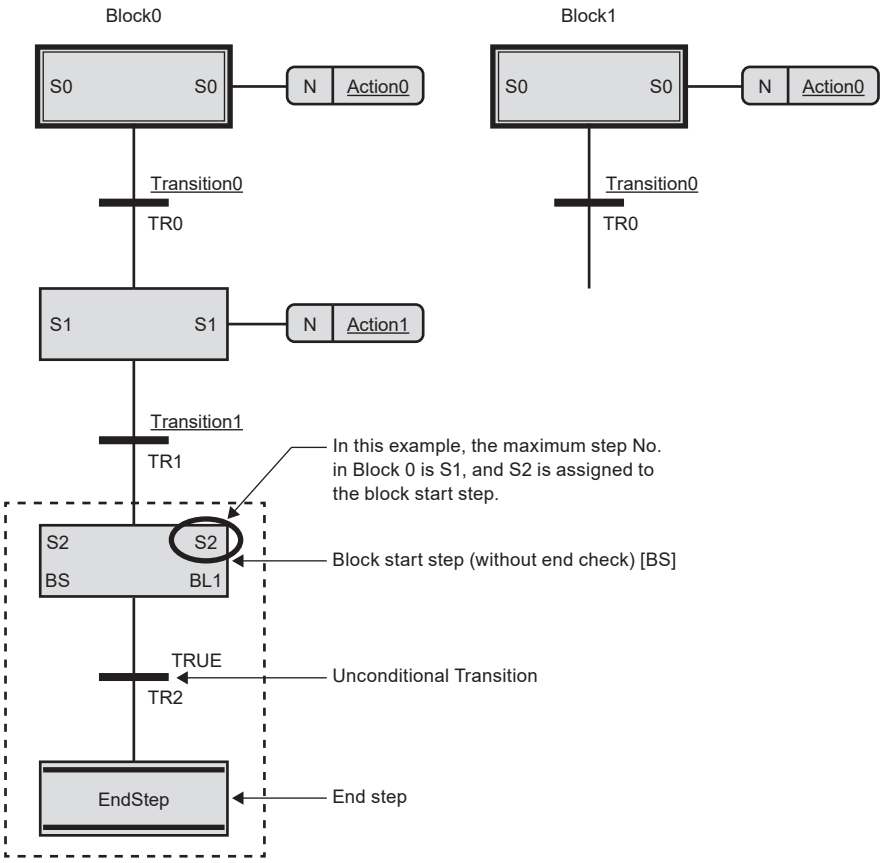

• A reset jump containing a self-reset will be replaced with an end step after replacement with GX Works3. When the reset jump used in an FX3U/FX3UC project is not a self-reset, reexamine the program.

GX Works2	GX Works3 (after reading another format)
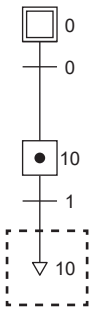	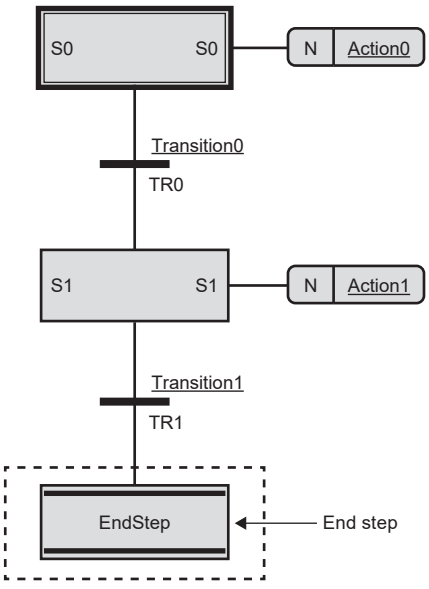

• An SFC block containing the following will be deleted after replacement with GX Works3. Modify the program if necessary.

- Jump to a non-existent step
- Jump to a step other than the initial steps of other blocks

INDEX

A

Auxiliary relay 154,158

C

Character string constant 157,160
Counter 155,159

D

Data register 156,159
Decimal constant 157,160

E

Extension file register 156,159
Extension register 156,159

H

Hexadecimal constant 157,160
High-speed counter 156,159

I

Index register 156,159
Input hardware filter . . 22,40,48,65,81,91,109,127
Input relay 154,158
Input signal current . . . 22,40,48,65,81,91,109,127
Interrupt pointer 157,160

M

Module access device 157,160

O

Output relay 154,158

P

Pointer 156,159

R

Real constant 157,160

S

State 154,158

T

Timer 155,158

MEMO

REVISIONS

Revision date	Revision	Description
July 2024	A	First edition
June 2025	B	■Added models FX3GC, FX5S CPU module (DC power supply type), FX5UJ CPU module (DC power supply type) ■Added or modified parts INTRODUCTION, RELEVANT MANUALS, GENERIC TERMS AND ABBREVIATIONS, Chapter 1, 2, 3, 4, 5, 6, 7, APPENDIX 1, 3

This manual confers no industrial property rights or any rights of any other kind, nor does it confer any patent licenses. Mitsubishi Electric Corporation cannot be held responsible for any problems involving industrial property rights which may occur as a result of using the contents noted in this manual.

©2024 MITSUBISHI ELECTRIC CORPORATION

WARRANTY

Please confirm the following product warranty details before using this product.

1. Gratis Warranty Term and Gratis Warranty Range

If any faults or defects (hereinafter "Failure") found to be the responsibility of Mitsubishi occurs during use of the product within the gratis warranty term, the product shall be repaired at no cost via the sales representative or Mitsubishi Service Company. However, if repairs are required onsite at domestic or overseas location, expenses to send an engineer will be solely at the customer's discretion. Mitsubishi shall not be held responsible for any re-commissioning, maintenance, or testing on-site that involves replacement of the failed module.

[Gratis Warranty Term]

The gratis warranty term of the product shall be for one year after the date of purchase or delivery to a designated place. Note that after manufacture and shipment from Mitsubishi, the maximum distribution period shall be six (6) months, and the longest gratis warranty term after manufacturing shall be eighteen (18) months. The gratis warranty term of repair parts shall not exceed the gratis warranty term before repairs.

[Gratis Warranty Range]

(1) The range shall be limited to normal use within the usage state, usage methods and usage environment, etc., which follow the conditions and precautions, etc., given in the instruction manual, user's manual and caution labels on the product.

(2) Even within the gratis warranty term, repairs shall be charged for in the following cases.
   1. Failure occurring from inappropriate storage or handling, carelessness or negligence by the user. Failure caused by the user's hardware or software design.
   2. Failure caused by unapproved modifications, etc., to the product by the user.
   3. When the Mitsubishi product is assembled into a user's device, Failure that could have been avoided if functions or structures, judged as necessary in the legal safety measures the user's device is subject to or as necessary by industry standards, had been provided.
   4. Failure that could have been avoided if consumable parts (battery, backlight, fuse, etc.) designated in the instruction manual had been correctly serviced or replaced.
   5. Relay failure or output contact failure caused by usage beyond the specified life of contact (cycles).
   6. Failure caused by external irresistible forces such as fires or abnormal voltages, and failure caused by force majeure such as earthquakes, lightning, wind and water damage.
   7. Failure caused by reasons unpredictable by scientific technology standards at time of shipment from Mitsubishi.
   8. Any other failure found not to be the responsibility of Mitsubishi or that admitted not to be so by the user.

2. Onerous repair term after discontinuation of production

(1) Mitsubishi shall accept onerous product repairs for seven (7) years after production of the product is discontinued.
Discontinuation of production shall be notified with Mitsubishi Technical Bulletins, etc.

(2) Product supply (including repair parts) is not available after production is discontinued.

3. Overseas service

Overseas, repairs shall be accepted by Mitsubishi's local overseas FA Center. Note that the repair conditions at each FA Center may differ.

4. Exclusion of loss in opportunity and secondary loss from warranty liability

Regardless of the gratis warranty term, Mitsubishi shall not be liable for compensation to:

(1) Damages caused by any cause found not to be the responsibility of Mitsubishi.

(2) Loss in opportunity, lost profits incurred to the user by Failures of Mitsubishi products.

(3) Special damages and secondary damages whether foreseeable or not, compensation for accidents, and compensation for damages to products other than Mitsubishi products.

(4) Replacement by the user, maintenance of on-site equipment, start-up test run and other tasks.

5. Changes in product specifications

The specifications given in the catalogs, manuals or technical documents are subject to change without prior notice.

6. Product application

(1) In using the Mitsubishi MELSEC programmable controller, the usage conditions shall be that the application will not lead to a major accident even if any problem or fault should occur in the programmable controller device, and that backup and fail-safe functions are systematically provided outside of the device for any problem or fault.

(2) The Mitsubishi programmable controller has been designed and manufactured for applications in general industries, etc. Thus, applications in which the public could be affected such as in nuclear power plants and other power plants operated by respective power companies, and applications in which a special quality assurance system is required, such as for railway companies or public service purposes shall be excluded from the programmable controller applications.
In addition, applications in which human life or property that could be greatly affected, such as in aircraft, medical applications, incineration and fuel devices, manned transportation, equipment for recreation and amusement, and safety devices, shall also be excluded from the programmable controller range of applications.
However, in certain cases, some applications may be possible, providing the user consults their local Mitsubishi representative outlining the special requirements of the project, and providing that all parties concerned agree to the special circumstances, solely at the user's discretion.

(3) Mitsubishi shall have no responsibility or liability for any problems involving programmable controller trouble and system trouble caused by DoS attacks, unauthorized access, computer viruses, and other cyberattacks.

TRADEMARKS

The company names, system names and product names mentioned in this manual are either registered trademarks or trademarks of their respective companies.
In some cases, trademark symbols such as '™' or '®' are not specified in this manual.

Manual number: SH(NA)-082703ENG-B

MITSUBISHI ELECTRIC CORPORATION

HEAD OFFICE: TOKYO BLDG., 2-7-3, MARUNOUCHI, CHIYODA-KU, TOKYO 100-8310, JAPAN
NAGOYA WORKS: 1-14, YADA-MINAMI 5-CHOME, HIGASHI-KU, NAGOYA 461-8670, JAPAN

When exported from Japan, this manual does not require application to the Ministry of Economy, Trade and Industry for service transaction permission.

Specifications subject to change without notice.