JY997D21101L **Side B**

MITSUBISHI ELECTRIC

Side A **JAPANESE**

Side B **ENGLISH**

Programmable Controller
MELSEC-F

FX3U-20SSC-H
INSTALLATION MANUAL

FX3U

Manual Number	JY997D21101
Revision	L
Date	December 2025

This manual describes the part names, dimensions, and specifications of the product. Before use, read this manual and manuals of relevant products fully to acquire proficiency in handling and operating the product. Make sure to learn all the product information, safety information, and precautions.
Store this manual in a safe place so that it can be taken out and read whenever necessary. Always forward it to the end user.
Registration
The company names, system names and product names mentioned in this manual are either registered trademarks or trademarks of their respective companies. In some cases, trademark symbols such as '™' or '®' are not specified in this manual.

Effective December 2025
Specifications are subject to change without notice.
© 2005 Mitsubishi Electric Corporation

Safety Precautions (Read these precautions before use.)

This manual classifies the safety precautions into two categories:

⚠WARNING and ⚠CAUTION.

⚠WARNING	Indicates that incorrect handling may cause hazardous conditions, resulting in death or severe injury.
⚠CAUTION	Indicates that incorrect handling may cause hazardous conditions, resulting in medium or slight personal injury or physical damage.

Depending on the circumstances, procedures indicated by ⚠CAUTION may also cause severe injury.
It is important to follow all precautions for personal safety.

Associated Manuals

Manual name	Manual No.	Description
FX3U Series User's Manual - Hardware Edition	JY997D16501	Explains the FX3U Series PLC specifications for I/O, wiring, installation, and maintenance.
FX3UC Series User's Manual - Hardware Edition	JY997D28701	Explains the FX3UC Series PLC specifications for I/O, wiring, installation, and maintenance.
FX3S/FX3G/FX3GC/ FX3U/FX3UC Series Programming Manual - Basic & Applied Instruction Edition	JY997D16601	Describes PLC programming for basic/applied instructions and devices.
FX3U-20SSC-H User's Manual	JY997D21301	Describes FX3U-20SSC-H Positioning block details.
FX Configurator-FP Operation Manual	JY997D21801	Describes operation details of FX Configurator-FP Setting/ Monitoring Tool.

How to obtain manuals
For product manuals or documents, contact with the Mitsubishi Electric dealer you purchased your product.

Certification of UL, cUL standards

The following product has UL and cUL certification.
UL, cUL File Number: E95239
Models : MELSEC FX3U series manufactured
from June 1st, 2006 FX3U-20SSC-H

Compliance with EC directive (CE Marking)

This note does not guarantee that an entire mechanical module produced in accordance with the contents of this note will comply with the following standards.
Compliance to EMC directive and LVD directive for the entire mechanical module should be checked by the user / manufacturer. For more details please contact the local Mitsubishi Electric sales site.

Requirement for Compliance with EMC directive

The following products have shown compliance through direct testing (of the identified standards below) and design analysis (through the creation of a technical construction file) to the European Directive for Electromagnetic Compatibility (2014/30/EU) when used as directed by the appropriate documentation.

Attention
This product is designed for use in industrial applications.
Type: Programmable Controller (Open Type Equipment)
Models: MELSEC FX3U series manufactured
from December 1st, 2005 FX3U-20SSC-H

Standard	Remark
EN61131-2:2007 Programmable controllers - Equipment requirements and tests	Compliance with all relevant aspects of the standard. **EMI** • Radiated Emission • Conducted Emission **EMS** • Radiated electromagnetic field • Fast transient burst • Electrostatic discharge • High-energy surge • Voltage drops and interruptions • Conducted RF • Power frequency magnetic field

Caution for EC Directive
Attach the ferrite core to the power supply and input cables (20SSC-H side). Attach the ferrite core in approximately 200 mm or less from connector on the 20SSC-H side.

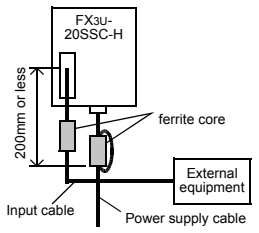

The ferrite core should use the following equivalent product.
•Power supply cable (1 turn necessary)
Model name: ZCAT2035-0930
(Manufactured by TDK co., Ltd.)
•Input cable
Model name: ZCAT3035-1330
(Manufactured by TDK co., Ltd.)

1. Introduction

FX3U-20SSC-H type positioning block (hereinafter referred to as 20SSC-H) is a special function block applicable to SSCNET III.
20SSC-H can perform positioning control by servo motor via SSCNET III applied servo amplifier.
For system configuration, refer to the following manual.
→ **FX3U-20SSC-H User's Manual**

1.1 Major Features of the FX3U-20SSC-H

1) 2-axis control is possible
One 20SSC-H controls 2 axes.
20SSC-H applies the 1-speed positioning and interrupt 1-speed constant quantity feed operations for constant quantity feed control, and also the linear interpolation and circular interpolation operations.
2) Connection to servo amplifier by SSCNET III is possible
- 20SSC-H connects directly to the MELSERVO (our company's servo amplifier: MR-J3-□B, MR-J3W-□B*1, MR-J3-□BS*2, MR-J4-□B*3) via SSCNET III.
- Connection using the SSCNET III cable between the 20SSC-H and the servo amplifier and between servo amplifiers reduces wiring. (Maximum length is 50m.)
- Using the SSCNET III cable (optical communication) makes connections less susceptible to electromagnetic noise, etc. from the servo amplifier.
- Setting the servo parameters on the 20SSC-H side and writing/reading the servo parameters to/from the servo amplifier using SSCNET III is possible.
- Actual current values and error descriptions the servo amplifier can be checked by the buffer memories of the 20SSC-H.

*1 The MR-J3W-□B can be connected within the functional range of the MR-J3-□B to the 20SSC-H.

*2 The MR-J3-□BS can be connected to a 20SSC-H later than Ver.1.40.
However, it does not support the fully closed loop system.

*3 The MR-J4-□B can be connected within the functional range of the "J3 compatibility mode" to the 20SSC-H.
However, it does not support the fully closed loop system.

3) Easy application of absolute position detection system
- The servo amplifier with absolute position detection enables the absolute positioning detection system.
- Once the zero position is established, the zero return operation at power startup is not necessary.
- The absolute position system allows the establishment of zero position by the data set type zero return. In this case, wiring for near-point DOG, etc. is not required.

4) Easy maintenance
- Various data such as positioning data, parameters, etc. can be saved to the flash memory (ROM) in the 20SSC-H.
- This allows the data to be saved without a battery.

5) Connectable PLC
- The connected FX3U or FX3UC PLC reads/writes the positioning data from/to the 20SSC-H.
- For connection to the FX3UC PLC, the FX2NC-CNV-IF or FX3UC-1PS-5V is needed.

1.2 Incorporated Items

Check that the following product and items are included in the package:

Product	FX3U-20SSC-H type positioning block
Accessories	• Special Unit/Block No. label × 1 sheet • FX2NC-100MPCB Power supply cable (1 m) × 1 cable • Dust proof protection sheet × 1 sheet • Installation manual (This manual)

1.3 External Dimensions and Part Names

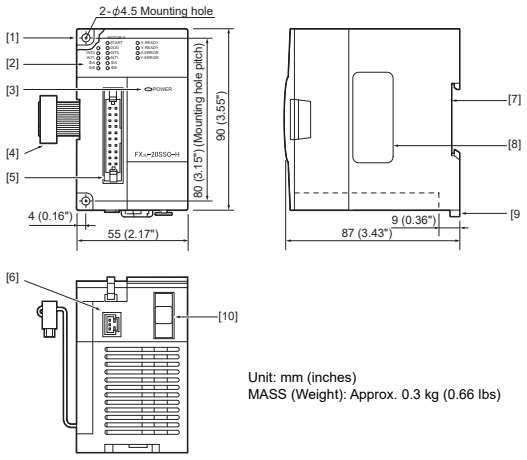

Unit: mm (inches)
MASS (Weight): Approx. 0.3 kg (0.66 lbs)

[1] Direct mounting hole:
2 holes of φ 4.5 (0.18")
(mounting screw: M4 screw)
[2] Status LEDs
[3] POWER LED (green)
[4] Extension cable
[5] Input connector
[6] Power supply connector
[7] DIN rail mounting groove
(DIN rail: DIN46277)
[8] Name plate
[9] DIN rail mounting hook
[10] SSCNET III connector

1.4 Power and Status LED

LED display	Color	Status	Description
POWER	Green	OFF	Power is not being supplied from the external power supply or the PLC
		ON	Power is being supplied from the external power supply or the PLC
X-READY Y-READY	Green	OFF	Error is occurring or positioning is being executed on the X/Y axis
		ON	Various operation commands are acceptable on the X/Y axis
X-ERROR Y-ERROR	Red	OFF	X/Y axis is operating normally
		Flicker	Error is occurring on the X/Y axis
		ON	CPU error is occurring on the X/Y axis
X-START Y-START	Red	OFF	START input OFF
		ON	START input ON
X-DOG Y-DOG	Red	OFF	DOG input OFF
		ON	DOG input ON
X-INT0 Y-INT0 X-INT1 Y-INT1	Red	OFF	Interrupt input OFF
		ON	Interrupt input ON
X-φA Y-φA	Red	OFF	Manual pulse generator A-phase input OFF
		ON	Manual pulse generator A-phase input ON
X-φB Y-φB	Red	OFF	Manual pulse generator B-phase input OFF
		ON	Manual pulse generator B-phase input ON

1.5 Pin Configuration

1.5.1 Input connector

For details on the input wiring and input cable, refer to the following manual.
→ **FX3U-20SSC-H User's Manual**

Connector pin array (aperture side)

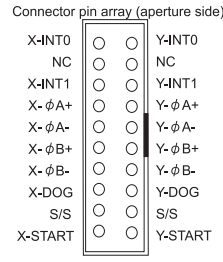

Terminal name	Description	Terminal name	Description
X-INT0	Interrupt input (for X axis)	Y-INT0	Interrupt input (for Y axis)
NC	Not used	NC	Not used
X-INT1	Interrupt input (for X axis)	Y-INT1	Interrupt input (for Y axis)
X-φA+	Input terminal for A-phase input of the manual pulse generator (2-phase pulse) (for X axis)	Y-φA+	Input terminal for A-phase input of the manual pulse generator (2-phase pulse) (for Y axis)
X-φA-	Common terminal for A-phase input of the manual pulse generator (2-phase pulse) (for X axis)	Y-φA-	Common terminal for A-phase input of the manual pulse generator (2-phase pulse) (for Y axis)
X-φB+	Input terminal for B-phase input of the manual pulse generator (2-phase pulse) (for X axis)	Y-φB+	Input terminal for B-phase input of the manual pulse generator (2-phase pulse) (for Y axis)
X-φB-	Common terminal for B-phase input of the manual pulse generator (2-phase pulse) (for X axis)	Y-φB-	Common terminal for B-phase input of the manual pulse generator (2-phase pulse) (for Y axis)
X-DOG	Near-point DOG input terminal (for X axis)	Y-DOG	Near-point DOG input terminal (for Y axis)
S/S	Power input terminal (START, DOG, INT0 and INT1) 24V DC *1	S/S	Power input terminal (START, DOG, INT0 and INT1) 24V DC *1
X-START	START input terminal (for X axis)	Y-START	START input terminal (for Y axis)

*1 Pins that have the same name (S/S) are shorted inside.

Caution
The pin array is seen from the connection side (aperture side) of the input connectors of the 20SSC-H. The pin numbers and the position of ▲ vary depending on the connectors for user cables. Perform wiring properly while paying attention to the position of notches and the direction of connectors.
Otherwise, the product may be damaged due to wiring mistakes.

1.5.2 Power supply connector

For the details on the power supply wiring and power cable, refer to the following manual.
→ **Refer to the FX3U-20SSC-H User's Manual**

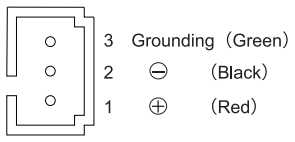

2. Specification

DESIGN PRECAUTIONS ⚠WARNING

- Make sure to have the following safety circuits outside of the PLC to ensure safe system operation even during external power supply problems or PLC failure.
Otherwise, malfunctions may cause serious accidents.
  - Most importantly, have the following: an emergency stop circuit, a protection circuit, an interlock circuit for opposite movements (such as normal vs. reverse rotation), and an interlock circuit (to prevent damage to the equipment at the upper and lower positioning limits).
  - Note that when the PLC CPU detects an error, such as a watchdog timer error, during self-diagnosis, all outputs are turned off. Also, when an error that cannot be detected by the PLC CPU occurs in an input/output control block, output control may be disabled.
External circuits and mechanisms should be designed to ensure safe machinery operation in such a case.
  - Note that when an error occurs in a relay, triac or transistor output device, the output could be held either on or off.
For output signals that may lead to serious accidents, external circuits and mechanisms should be designed to ensure safe machinery operation in such a case.

DESIGN PRECAUTIONS ⚠CAUTION

- Make sure to observe the following precautions in order to prevent any damage to the machinery or accidents due to abnormal data written to the PLC under the influence of noise:
  - Do not bundle the main circuit line together with or lay it close to the main circuit, high-voltage line or load line.
Otherwise, noise disturbance and/or surge induction are likely to take place. As a guideline, lay the control line at least 100 mm (3.94") or more away from the main circuit or high-voltage lines.
  - Ground the shield wire or shield of the shielded cable at one point on the PLC. However, do not ground them at the same point as the high-voltage lines.
  - Install module so that excessive force will not be applied to the input, power, and optical connectors.
Failure to do so may result in wire damage/breakage or PLC failure.

STARTUP AND MAINTENANCE PRECAUTIONS ⚠CAUTION

- Do not disassemble or modify the PLC.
Doing so may cause fire, equipment failures, or malfunctions.
* For repair, contact your local Mitsubishi Electric representative.
- Do not drop the product or exert strong impact to it.
Doing so may cause damage.

DISPOSAL PRECAUTIONS ⚠CAUTION

- Please contact a certified electronic waste disposal company for the environmentally safe recycling and disposal of your device.

TRANSPORTATION AND STORAGE PRECAUTIONS ⚠CAUTION

- The product is a precision instrument. During transportation, avoid impacts larger than those specified in the general specifications by using dedicated packaging boxes and shock-absorbing palettes.
Failure to do so may cause failures in the product.
After transportation, verify operation of the product and check for damage of the mounting part, etc.

2.1 Applicable PLC

Model name	Applicability	Maximum number of connectable units
FX3U Series PLC	Ver. 2.20 (from the first product) and later	8 units
FX3UC Series PLC*1	Ver. 2.20 (from products manufactured in May, 2005) and later	8 units*2

The version number can be checked by monitoring the last three digits of D8001/D8101.

*1 An FX2NC-CNV-IF or FX3UC-1PS-5V is necessary to connect the 20SSC-H with the FX3UC PLC.

*2 Up to 7 units can be connected to the FX3UC-32MT-LT(-2) PLC.

2.2 General Specifications

The items other than the following are equivalent to those of the PLC main unit.
For general specifications, refer to the manual of the PLC main unit.
→ **FX3U Series User's Manual - Hardware Edition**
→ **FX3UC Series User's Manual - Hardware Edition**

Item	Specification	
Dielectric withstand voltage	500 V AC for one minute	Between all terminals and ground terminal
Insulation resistance	5 MΩ or higher by 500 V DC insulation resistance tester	

2.3 Power Supply Specification

Item		Specification
External power supply	Power supply voltage	24 V DC +20% -15% Ripple (p-p) within 5%
	Permitted instantaneous power failure time	Operation continues when the instantaneous power failure is shorter than 5 ms.
	Power consumption	5 W (220 mA/24 V DC)
	Power fuse	1 A
Internal power supply	PLC power supply	100 mA / 5 V DC

2.4 Performance Specification

Item	Specification
Number of control axes	2 axes
Backup	Positioning parameters, servo parameters, and table information can be saved to flash memory Write count: Maximum 100,000 times
No. of occupied I/O points	8 points (input or output, whichever may be counted)
Connectable servo amplifier	MELSERVO-J3-□B*1, MELSERVO-J3W-□B*2*3, MELSERVO-J3-□BS*1*4, MELSERVO-J4-□B*1*5 Standard cord length :Station to station maximum 20 m Long distance cable length:Station to station maximum 50 m
Servo bus	SSCNET III
Scan cycle	1.77 ms
Control input	Interrupt input : 2 inputs (INT0 and INT1) per axis DOG : 1 input per input axis START input : 1 input per axis Manual pulse generator:1 input per axis (A/B-phase)
Parameter	Positioning parameter : 27 types Servo parameter : 61 types
Control data	20 types
Monitor data	35 types
Positioning program	Created by sequence programs (using FROM/TO instruction, etc.) Direct operation (1 for X and Y axes respectively) Table operation (300 tables for X, Y, and XY axes respectively)

Item		Specification
Positioning	Method	Increment/Absolute
	Unit	PLS, μm, 10^{-4} inch, mdeg
	Unit magnification	1, 10, 100, and 1000-fold
	Positioning range	-2,147,483,648 to 2,147,483,647 PLS
	Speed command	Hz, cm/min, 10 deg/min, inch/min
	Acceleration/ deceleration process	Trapezoidal acceleration/deceleration, S-pattern acceleration/deceleration: 1 to 5000 ms Only trapezoidal acceleration/deceleration is available for interpolation
	Starting time	1.6 ms or less
	Interpolation function	2-axes linear interpolation, 2-axes circular interpolation

*1 Up to two units can be connected.

*2 One unit can be connected.

*3 The MR-J3W-□B can be connected within the functional range of the MR-J3-□B to the 20SSC-H.

*4 The MR-J3-□BS can be connected to a 20SSC-H later than Ver.1.40.
However, it does not support the fully closed loop system.

*5 The MR-J4-□B can be connected within the functional range of the "J3 compatibility mode" to the 20SSC-H.
However, it does not support the fully closed loop system.

2.5 Input Specifications

2.5.1 Input specifications

Item		Specification
Input signal name	Group 1	X axis interrupt input: X-INT0, X-INT1 Used for interrupt operation
		Y axis interrupt input: Y-INT0, Y-INT1 Used for interrupt operation
		X axis near-point DOG input: X-DOG Used for zero return
		Y axis near-point DOG input: Y-DOG Used for zero return
		START command for X axis positioning operation: X-START
		START command for Y axis positioning operation: Y-START
	Group 2	Manual pulse generator input for X axis: X-φA+/X-φA-, X-φB+/X-φB- 1 edge count at 2-phase 2-count
		Manual pulse generator input for Y axis: Y-φA+/Y-φA-, Y-φB+/Y-φB- 1 edge count at 2-phase 2-count
	Group 3	External power supply for signals: S/S Connected to power supply for INT0, INT1, DOG and START
Group 1	Operation display	LED ON at input ON
	Signal voltage	24 V DC +20% -15% (Power is supplied from S/S terminal)
	Input current	7.0 mA± 1 mA /24 V DC
	ON current	4.5 mA or more
	OFF current	1.5 mA or less
	Signal form	No-voltage contact input Sink input : NPN open collector transistor Source input : PNP open collector transistor
	Response time	Hardware filter 1 ms or less
	Circuit insulation	Photo-coupler insulation
Group 2	Operation display	LED ON at input ON
	Signal voltage	3 to 5.25 V DC
	Input current	3.0 to 8.5 mA
	ON current	3.0 mA or more
	OFF current	0.5 mA or less
	Signal form	Differential line driver (corresponding to AM26LS31)
Group 2	Response frequency	2-phases pulse 100 kHz or less (Duty 50%)
	Circuit insulation	Photo-coupler insulation

Item		Specification
Group 3	Power supply voltage	24 V DC +20% -15%
	Consumption current	64 mA or less

2.5.2 Input Interface Internal Circuit

1) Group 1 and 3

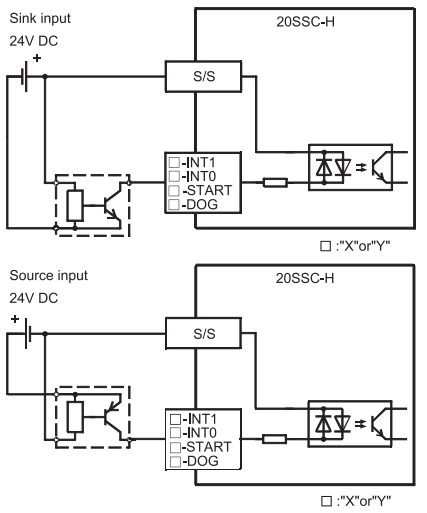

2) Group 2

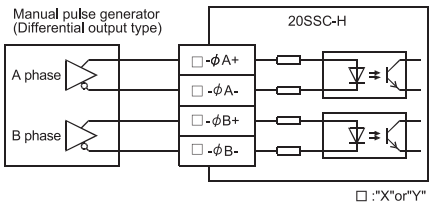

This manual confers no industrial property rights or any rights of any other kind, nor does it confer any patent licenses. Mitsubishi Electric Corporation cannot be held responsible for any problems involving industrial property rights which may occur as a result of using the contents noted in this manual.

Warranty
Exclusion of loss in opportunity and secondary loss from warranty liability
Regardless of the gratis warranty term, Mitsubishi shall not be liable for compensation to:
(1) Damages caused by any cause found not to be the responsibility of Mitsubishi.
(2) Loss in opportunity, lost profits incurred to the user by Failures of Mitsubishi products.
(3) Special damages and secondary damages whether foreseeable or not, compensation for accidents, and compensation for damages to products other than Mitsubishi products.
(4) Replacement by the user, maintenance of on-site equipment, start-up test run and other tasks.

⚠ For safe use

- This product has been manufactured as a general-purpose part for general industries, and has not been designed or manufactured to be incorporated in a device or system used in purposes related to human life.
- Before using the product for special purposes such as nuclear power, electric power, aerospace, medicine or passenger movement vehicles, consult with Mitsubishi Electric.
- This product has been manufactured under strict quality control. However when installing the product where major accidents or losses could occur if the product fails, install appropriate backup or failsafe functions in the system.

MITSUBISHI ELECTRIC CORPORATION
HEAD OFFICE : TOKYO BUILDING, 2-7-3 MARUNOUCHI, CHIYODA-KU, TOKYO 100-8310, JAPAN