JY997D47101G Side B

MITSUBISHI ELECTRIC

Side A JAPANESE
Side B ENGLISH

Programmable Controller
MELSEC-F

FX3U-1PG

INSTALLATION MANUAL

FX3U

Manual Number	JY997D47101
Revision	G
Date	October 2025

This manual describes the part names, dimensions, mounting, and specifications of the product. Before use, read this manual and the manuals of all relevant products fully to acquire proficiency in handling and operating the product. Make sure to learn all the product information, safety information, and precautions.
Store this manual in a safe place so that it can be taken out and read whenever necessary. Always forward it to the end user.
Registration:
The company and product names described in this manual are registered trademarks or the trademarks of their respective companies.

Effective October 2025
Specifications are subject to change without notice.
© 2012 Mitsubishi Electric Corporation

Safety Precautions (Read these precautions before use.)

This manual classifies the safety precautions into two categories:

⚠WARNING and ⚠CAUTION.

⚠WARNING	Indicates that incorrect handling may cause hazardous conditions, resulting in death or severe injury.
⚠CAUTION	Indicates that incorrect handling may cause hazardous conditions, resulting in medium or slight personal injury or physical damage.

Depending on the circumstances, procedures indicated by ⚠CAUTION may also cause severe injury.
It is important to follow all precautions for personal safety.

Associated Manuals

Manual name	Manual No.	Description
FX3U-1PG User's Manual	JY997D47301	Describes details of the FX3U-1PG pulse output block.
FX3U Series User's Manual - Hardware Edition	JY997D16501	Explains the FX3U Series PLC specifications for I/O, wiring, installation, and maintenance.
FX3UC Series User's Manual - Hardware Edition	JY997D28701	Explains the FX3UC Series PLC specifications for I/O, wiring, installation, and maintenance.
FX3S/FX3G/FX3GC/ FX3U/FX3UC Series Programming Manual - Basic & Applied Instruction Edition	JY997D16601	Describes PLC programming for basic/applied instructions and devices.
MELSEC iQ-F FX5S/ FX5UJ/FX5U/FX5UC User's Manual (Hardware)	SH-082452ENG	Describes the details of hardware of the FX5 CPU module, including performance specifications, wiring, installation, and maintenance.

How to obtain manuals
For product manuals or documents, consult with the Mitsubishi Electric dealer from who you purchased your product.

Certification of UL, cUL standards

FX3U-1PG units comply with the UL standards (UL, cUL).
UL, cUL File Number: E95239
Regarding the standards that comply with the main unit, please refer to either the FX series product catalog or consult with your nearest Mitsubishi product provider.

Compliance with EC directive (CE Marking)

This note does not guarantee that an entire mechanical module produced in accordance with the contents of this note will comply with the following standards.
Compliance to EMC directive and LVD directive for the entire mechanical module should be checked by the user/manufacturer. For more information please consult with your nearest Mitsubishi product provider.
Regarding the standards that comply with the main unit, please refer to either the FX series product catalog or consult with your nearest Mitsubishi product provider.

Requirement for Compliance with EMC directive

The following products have shown compliance through direct testing (of the identified standards below) and design analysis (through the creation of a technical construction file) to the European Directive for Electromagnetic Compatibility (2014/30/EU) when used as directed by the appropriate documentation.

Attention
This product is designed for use in industrial applications.

Type: Programmable Controller (Open Type Equipment)
Models: MELSEC FX3U series manufactured
from September 1st, 2012 FX3U-1PG

Standard	Remark
EN61131-2: 2007 Programmable controllers - Equipment requirements and tests	Compliance with all relevant aspects of the standard. EMI • Radiated Emission • Conducted Emission EMS • Radiated electromagnetic field • Fast transient burst • Electrostatic discharge • High-energy surge • Voltage drops and interruptions • Conducted RF • Power frequency magnetic field

Caution for EC Directive

- Installation in Enclosure
  Programmable logic controllers are open-type devices that must be installed and used within conductive control cabinets. Please use the programmable logic controller while installed within a conductive shielded control cabinet. Please secure the cabinet door to the control cabinet (for conduction). Installation within a control cabinet greatly affects the safety of the system and aids in shielding noise from the programmable logic controller.
- Control cabinet
  - The control cabinet must be conductive.
  - Ground the control cabinet with the thickest possible grounding cable.
  - To ensure that there is electric contact between the control cabinet and its door, connect the cabinet and its doors with thick wires.
  - In order to suppress the leakage of radio waves, the control cabinet structure must have minimal openings. Also, wrap the cable holes with a shielding cover or other shielding devices.
  - The gap between the control cabinet and its door must be as small as possible by attaching EMI gaskets between them.

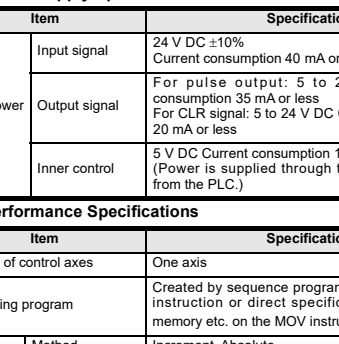

*1 These wires are used to improve the conductivity between the door and control cabinet.

- Note for compliance with EN61131-2: 2007
  General note on the use of the power supply cable.
  The FX3U-1PG unit requires that the cable used for power supply is 30 m or less.
- The shield of the twisted pair cable used for the FP, RP, PG0, and CLR signal wires should be grounded at both ends of the cable.
- Please attach a ferrite core less than 200 mm from the other end of the FP, RP, PG0, and CLR signal wires. The ferrite core should be a product equivalent to ZCAT3035-1330 by TDK Corp.

Compliance with UKCA marking

The requirements for compliance with UKCA marking are the same as that with EC directive (CE marking).

1. Introduction

FX3U-1PG Pulse Output Block (hereinafter referred to as FX3U-1PG) is a special function block that can output a maximum 200 kHz pulse train and drive one servo motor or stepping motor through the servo amplifier or stepping motor driver.
→ **For system configuration, refer to FX3U-1PG User's Manual.**

1.1 Major Features of the FX3U-1PG

1) FX3U-1PG controls the positioning operation of one servo motor or stepping motor per unit.
2) A pulse train of max. 200 kHz can be output. (transistor output)
3) The connected FX3U/FX3UC*1/FX5U*2/FX5UC*2PLC reads/writes the positioning data from/to the FX3U-1PG.

*1 An FX2NC-CNV-IF or FX3UC-1PS-5V is necessary to connect the FX3U-1PG with the FX3UC PLC.
*2 An FX5-CNV-BUS or FX5-CNV-BUSC is necessary to connect the FX3U-1PG with the FX5U/FX5UC PLC.

1.2 Incorporated Items

Check to ensure the following product and items are included in the package.

Included Item	
FX3U-1PG	1 unit
Special unit/block No. label	1 sheet
Dust proof protection sheet	1 sheet
Manuals (Japanese version, English version) (This manual)	1 manual each

1.3 External Dimensions and Part Names

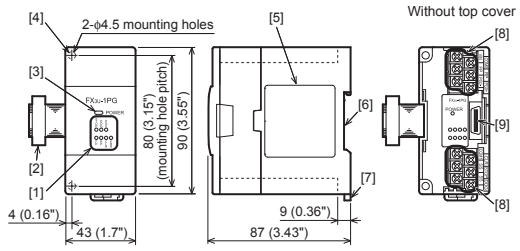

Unit: mm (inches)
MASS (Weight): Approx. 0.2 kg (0.44 lbs)

[1] Status LEDs (red)
[2] Extension cable
[3] Power LED (green)
[4] Direct mounting hole
2 holes of ϕ4.5 (0.18")
(mounting screw: M4 screw)
[5] Name plate
[6] DIN rail mounting groove
(DIN rail: DIN46277,
35 mm (1.38") width)
[7] DIN rail mounting hook
[8] Terminal block (M3 screw)
[9] Extension connector

1.4 Status LEDs

LED display	LED color	Status	Description
POWER	Green	OFF	5 V DC is not being supplied from the PLC
		ON	5 V DC is being supplied from the PLC
STOP	Red	OFF	STOP input OFF
		ON	STOP input ON
DOG	Red	OFF	DOG input OFF
		ON	DOG input ON
PG0	Red	OFF	Zero point signal OFF
		ON	Zero point signal ON
FP	Red	OFF	Forward pulse or pulse train interrupted
		Flicker	Forward pulses or pulse train is being output
RP	Red	OFF	Reverse pulse or directional output interrupted
		Flicker	Reverse pulses is being output
		ON	Directional output is being output
CLR	Red	OFF	CLR signal is not output
		ON	CLR signal is being output
ERR	Red	OFF	Operating normally
		Flicker	Error occurred
		ON	CPU error occurred

1.5 Terminal Layout

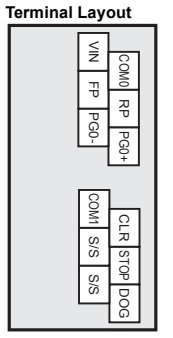

Terminal name	Description
VIN	Power terminal for pulse output
COM0	Common terminal for pulse output
FP	Terminal which outputs forward pulse or pulse train
RP	Terminal which outputs reverse pulse or direction signal
PG0-	Input terminal for zero point signal
PG0+	Power terminal for zero point signal
COM1	Common terminal for CLR signal output
CLR	Terminal for CLR signal output
S/S	24 V DC power terminal for STOP input and DOG input
STOP	Terminal for STOP input or interrupt input 1
DOG	Terminal for DOG input or interrupt input 0

- Terminal block screw size and tightening torque
  Terminal block screw: M3 screw
  Tightening torque: 0.5 to 0.8 N•m
  Do not tighten the terminal block mounting screws with a torque outside the above-mentioned range. Failure to do so may cause equipment failures or malfunctions.

For details on the wiring needed to connect to the terminal blocks shown in the figure above, refer to the following manual.
→ **Refer to FX3U-1PG User's Manual.**

2. Installation

For details on installation, refer to the following manual.
→ **Refer to FX3U-1PG User's Manual.**

INSTALLATION PRECAUTIONS ⚠WARNING

- Make sure to cut off all phases of the power supply externally before attempting installation work. Failure to do so may cause electric shock or damage to the product.

INSTALLATION PRECAUTIONS ⚠CAUTION

- Use the product within the generic environment specifications described in PLC main unit manual (Hardware Edition).
  Never use the product in areas with excessive dust, oily smoke, conductive dusts, corrosive gas (salt air, Cl2, H2S, SO2 or NO2), flammable gas, vibration or impacts, or expose it to high temperature, condensation, or rain and wind.
  If the product is used in such conditions, electric shock, fire, malfunctions, deterioration or damage may occur.
- Do not touch the conductive parts of the product directly. Doing so may cause device failures or malfunctions.
- Install the product securely using a DIN rail or mounting screws.
- Install the product on a flat surface. If the mounting surface is rough, undue force will be applied to the PC board, thereby causing nonconformities.
- When drilling screw holes or wiring, make sure that cutting and wiring debris do not enter the ventilation slits. Failure to do so may cause fire, equipment failures or malfunctions.
- Be sure to remove the dust proof sheet from the PLC's ventilation slits when installation work is completed. Failure to do so may cause fire, equipment failures or malfunctions.
- Make sure to attach the top cover, offered as an accessory, before turning on the power or initiating operation after installation or wiring work. Failure to do so may cause electric shock.
- Connect extension cables securely to their designated connectors. Loose connections may cause malfunctions.

2.1 Connection with PLC

The FX3U-1PG connects on the right side of an PLC main unit or extension units/blocks (including special function units/blocks). For connection to an FX3UC Series PLC or FX2NC Series extension block, an FX2NC-CNV-IF or FX3UC-1PS-5V is required. For connection to an FX5U/FX5UC PLC, an FX5-CNV-BUS or FX5-CNV-BUSC is required. For details, refer to the respective PLC manual.
→ **Refer to FX3U Series User's Manual - Hardware Edition.**
→ **Refer to FX3UC Series User's Manual - Hardware Edition.**
→ **Refer to the MELSEC iQ-F FX5S/FX5UJ/FX5U/FX5UC User's Manual (Hardware).**

2.2 Mounting

The product is mounted by the following method.

- DIN rail mounting
- Direct mounting (mounting screw: M4 screw)

For details, refer to the respective PLC manual.
→ **Refer to FX3U Series User's Manual - Hardware Edition.**
→ **Refer to FX3UC Series User's Manual - Hardware Edition.**
→ **Refer to the MELSEC iQ-F FX5S/FX5UJ/FX5U/FX5UC User's Manual (Hardware).**

3. Specification

For details on specifications, refer to the following manual.
→ **Refer to FX3U-1PG User's Manual.**

DESIGN PRECAUTIONS ⚠WARNING

- Make sure to have the following safety circuits outside of the PLC to ensure safe system operation even during external power supply problems or PLC failure.
  Otherwise, malfunctions may cause serious accidents.
  1) Most importantly, have the following: an emergency stop circuit, a protection circuit, an interlock circuit for opposite movements (such as normal vs. reverse rotation), and an interlock circuit (to prevent damage to the equipment at the upper and lower positioning limits).
  2) Note that when the PLC CPU detects an error, such as a watchdog timer error, during self-diagnosis, all outputs are turned off. Also, when an error that cannot be detected by the PLC CPU occurs in an input/output control block, output control may be disabled. External circuits and mechanisms should be designed to ensure safe machinery operation in such a case.
  3) Note that when an error occurs in a relay, triac or transistor output device, the output could be held either on or off. For output signals that may lead to serious accidents, external circuits and mechanisms should be designed to ensure safe machinery operation in such a case.

DESIGN PRECAUTIONS ⚠CAUTION

- Make sure to observe the following precautions in order to prevent any damage to the machinery or accidents due to abnormal data written to the PLC under the influence of noise:
  1) Do not bundle the main circuit line together with or lay it close to the main circuit, high-voltage line or load line.
     Otherwise, noise disturbance and/or surge induction are likely to take place. As a guideline, lay the control line at least 100mm (3.94") or more away from the main circuit or high-voltage lines.
  2) Ground the shield wire or shield of a shielded cable. Do not use common grounding with heavy electrical systems.
- Install module so that excessive force will not be applied to the terminal blocks. Failure to do so may result in wire damage/breakage or PLC failure.

WIRING PRECAUTIONS ⚠WARNING

- Make sure to cut off all phases of the power supply externally before attempting wiring work. Failure to do so may cause electric shock or damage to the product.

WIRING PRECAUTIONS ⚠CAUTION

- Connect the DC power supply wiring to the dedicated terminal described in this manual. If an AC power supply is connected to a DC input/output terminal or DC power supply terminal, the PLC will burn out.
- Make sure to attach the top cover, offered as an accessory, before turning on the power or initiating operation after installation or wiring work. Failure to do so may cause electric shock.
- When drilling screw holes or wiring, make sure that cutting and wiring debris do not enter the ventilation slits. Failure to do so may cause fire, equipment failures or malfunctions.
- Make sure to properly wire the extension equipment in accordance with the following precautions. Failure to do so may cause electric shock, equipment failures, a short-circuit, wire breakage, malfunctions, or damage to the product.
  - The disposal size of the cable end should follow the dimensions described in the manual.
  - Tightening torque should follow the specifications in the manual.

DISPOSAL PRECAUTIONS ⚠CAUTION

- Please contact a certified electronic waste disposal company for the environmentally safe recycling and disposal of your device.

TRANSPORTATION AND STORAGE PRECAUTIONS ⚠CAUTION

- The PLC is a precision instrument. During transportation, avoid impacts larger than those specified in the general specifications of the PLC main unit manual by using dedicated packaging boxes and shock-absorbing palettes. Failure to do so may cause failures in the PLC. After transportation, verify operation of the PLC and check for damage of the mounting part, etc.

3.1 Applicable PLC

Model name	Applicability	Maximum number of connectable units
FX3U Series PLC	Ver. 2.20 and later*3	8 units
FX3UC Series PLC*1	Ver. 2.20 and later*3	6 units
FX5U PLC*2	From first production	8 units
FX5UC PLC*2	From first production	6 units

*1 An FX2NC-CNV-IF or FX3UC-1PS-5V is necessary to connect the FX3U-1PG with the FX3UC PLC.
*2 An FX5-CNV-BUS or FX5-CNV-BUSC is necessary to connect the FX3U-1PG with the FX5U/FX5UC PLC.
*3 The version number can be checked by reading the last three digits of device D8001/D8101.

3.2 General Specifications

Items other than the following are equivalent to those of the PLC main unit.
For general specifications, refer to the manual of the PLC main unit.
→ **For details, refer to the FX3U Series User's Manual - Hardware Edition.**
→ **For details, refer to the FX3UC Series User's Manual - Hardware Edition.**
→ **For details, refer to the MELSEC iQ-F FX5S/FX5UJ/FX5U/FX5UC User's Manual (Hardware).**

Item	Specification	
Dielectric withstand voltage	500 V AC for one minute	Between all terminals and ground terminal
Insulation resistance	5 MΩ or higher by 500 V DC insulation resistance tester	

3.3 Power Supply Specifications

Item		Specification
Drive power supply	Input signal	24 V DC ±10% Current consumption 40 mA or less
	Output signal	For pulse output: 5 to 24 V DC Current consumption 35 mA or less For CLR signal: 5 to 24 V DC Current consumption 20 mA or less
	Inner control	5 V DC Current consumption 150 mA (Power is supplied through the extension cable from the PLC.)

3.4 Performance Specifications

Item		Specification
Number of control axes		One axis
Positioning program		Created by sequence programs (using FROM/TO instruction or direct specification of the buffer memory etc. on the MOV instruction etc.*1)
Positioning	Method	Increment, Absolute
	Unit	PLS, μm, 10^{-4} inch, mdeg
	Unit magnification	1, 10, 100, 1000-fold
	Range	-2,147,483,648 to 2,147,483,647 PLS
	Operation speed	Hz, cm/min, inch/min, 10deg/min
	Output frequency	1 Hz to 200 kHz
	Acceleration/ deceleration process	Trapezoidal acceleration/deceleration: 1 to 32,767 ms Approximate S-shaped acceleration/deceleration: 1 to 5,000 ms
Positioning	Starting time	Motor system: 1 ms or less Machine system: 2 ms or less
Number of I/O occupied points		8 points (taken from either the input or output points of the PLC)

*1 For details of other applied instructions and methods, refer to the FX3S/FX3G/FX3GC/FX3U/FX3UC Programming Manual.

3.5 Input specifications and wiring example

3.5.1 Input specifications

Item		Specification
Input signal name	Group 1	STOP: Deceleration stop input or used for interrupt input of External command positioning, Interrupt 2-speed positioning operation
		DOG: Used for DOG input of DOG type mechanical zero return operation or used for interrupt input of External command positioning, Interrupt 1-speed positioning, Interrupt stop, Interrupt 2-speed positioning operation
	Group 2	PG0: Zero point signal input Used for DOG type mechanical zero return operation
Group 1	Signal voltage	24 V DC (Power is supplied from S/S terminal.)
	Input current	7.0 mA
	ON current	4.5 mA or more
	OFF current	1.5 mA or less
	Signal form	No-voltage contact input Sink input: NPN open collector transistor Source input: PNP open collector transistor
	Response time	DOG input: 1 ms STOP input: 4 ms
	Circuit insulation	Photo-coupler insulation
	Operation display	LED ON at input ON
Group 2	Signal voltage	5 to 24 V DC
	Input current	20 mA or less
	ON current	4.0 mA or more
	OFF current	0.5 mA or less
	Signal form	NPN open collector transistor
	Response time	4 μs or more
	Circuit insulation	Photo-coupler insulation
	Operation display	LED ON at input ON

3.5.2 Input wiring example

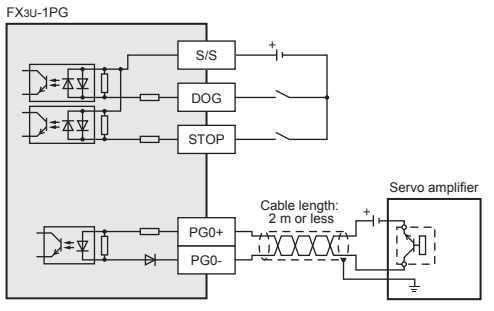

3.6 Output specifications and wiring example

3.6.1 Output specifications

Item		Specification
Output signal name	Group 1	FP: Forward pulse or pulse train
		RP: Reverse pulse or direction signal
	Group 2	CLR: CLR signal
Group 1	Output form	Transistor
	Output system	Forward (FP) and reverse (RP) pulse or pulse (PLS) with direction (DIR) can be selected.
	Output frequency	1 Hz to 200 kHz
	Rated load voltage	5 to 24 V DC
	Max. load current	20 mA or less
	VIN current consumption	5 to 24 V DC 35 mA or less
	Output ON voltage	1.0 V or less
	Operation display	LED ON at output ON
Group 2	Output form	Transistor
	Output system	Pulse (Output pulse width: 20 ms)
	Rated load voltage	5 to 24 V DC
	Max. load current	20 mA or less
	Output ON voltage	1.5 V or less
	Operation display	LED ON at output ON

3.6.2 Output wiring example

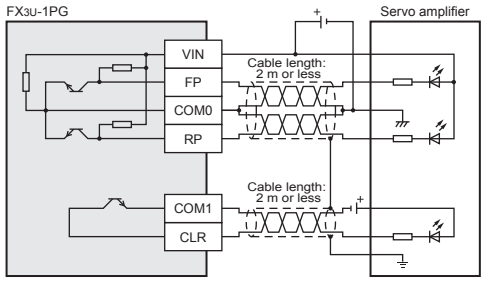

3.7 Wiring Precautions

1) The power supply used for FP, RP, PG0, and CLR should be separate from the power supply used for the other signals.
2) In an environment with a lot of noise, when malfunctions such as position gap occur, the influence of noise may be mitigated with the following measures.
   - Attach a noise filter (TDK-Lambda Corp. MXB-1210-33 or similar) on the FX3U-1PG power supply line, one on the end nearest the servo amplifier, and one on the end nearest the power supply unit.
   - Attach a ferrite core (TDK Corp. ZCAT3035-1330 or similar) to the VIN, FP, RP, PG0, and CLR signal wires, on the end nearest the servo amplifier.

「电器电子产品有害物质限制使用标识要求」的表示方式

产品正常使用终结废弃时，有关电子信息产品的回收，
再利用等要遵守各自治体的法律法规的要求。
Note: This symbol mark is for China only.

含有有害10物质的名称，含有量，含有部品
本产品中所含有的有害10物质的名称，含有量，含有部品如下表所示。

产品中有害物质的名称及含信息表

部件名称	有害物质					
	铅（Pb）	汞（Hg）	镉（Cd）	六价铬（Cr(VI)）	多溴联苯（PBBs）	多溴二苯醚（PBDEs）
外壳	○	○	○	○	○	○
印刷基板	×	○	○	○	○	○

部件名称	有害物质			
	邻苯二甲酸二正丁酯（DBP）	邻苯二甲酸二异丁酯（DIBP）	邻苯二甲酸丁苄酯（BBP）	邻苯二甲酸二（2-乙基）己酯（DEHP）
外壳	○	○	○	○
印刷基板	○	○	○	○

注1 ○：表示该有害物质在该部件所有均质材料中的含量均不超出电器电子产品有害物质限制使用国家标准要求。
×：表示该有害物质至少在该部件的某一均质材料中的含量超出电器电子产品有害物质限制使用国家标准要求。
注2 以上未列出的部件，表明其有害物质含量均不超出电器电子产品有害物质限制使用国家标准要求。
基于中国标准法的参考规格：GB/T15969.2

This manual confers no industrial property rights or any rights of any other kind, nor does it confer any patent licenses. Mitsubishi Electric Corporation cannot be held responsible for any problems involving industrial property rights which may occur as a result of using the contents noted in this manual.

Warranty
Exclusion of loss in opportunity and secondary loss from warranty liability
Regardless of the gratis warranty term, Mitsubishi shall not be liable for compensation to:
(1) Damages caused by any cause found not to be the responsibility of Mitsubishi.
(2) Loss in opportunity, lost profits incurred to the user by Failures of Mitsubishi products.
(3) Special damages and secondary damages whether foreseeable or not, compensation for accidents, and compensation for damages to products other than Mitsubishi products.
(4) Replacement by the user, maintenance of on-site equipment, start-up test run and other tasks.

⚠ For safe use

- This product has been manufactured as a general-purpose part for general industries, and has not been designed or manufactured to be incorporated in a device or system used in purposes related to human life.
- Before using the product for special purposes such as nuclear power, electric power, aerospace, medicine or passenger movement vehicles, consult with Mitsubishi Electric.
- This product has been manufactured under strict quality control. However when installing the product where major accidents or losses could occur if the product fails, install appropriate backup or failsafe functions in the system.

MITSUBISHI ELECTRIC CORPORATION
HEAD OFFICE : TOKYO BUILDING, 2-7-3 MARUNOUCHI, CHIYODA-KU, TOKYO 100-8310, JAPAN