JY997D40801E **Side B**

MITSUBISHI ELECTRIC

Side A JAPANESE

Side B ENGLISH

Programmable Controller
MELSEC-F

FX2N-8EYR-S-ES/UL HARDWARE MANUAL

FX2N

Manual Number	JY997D40801
Revision	E
Date	December 2025

This manual describes the part names, dimensions, mounting, and specifications of the product. Before use, read this manual and the manuals of all relevant products fully to acquire proficiency in handling and operating the product. Make sure to learn all the product information, safety information, and precautions.
Store this manual in a safe place so that it can be taken out and read whenever necessary. Always forward it to the end user.
Registration:
Phillips is a registered trademark of Phillips Screw Company.
The company and product names described in this manual are registered trademarks or the trademarks of their respective companies.

Effective December 2025
Specifications are subject to change without notice.

Safety Precaution (Read these precautions before use.)

If the equipment is used in a manner not specified by the manufacturer, the protection provided by the equipment may be impaired.
This manual classify the safety precautions into two categories:

⚠WARNING and ⚠CAUTION .

⚠WARNING	Indicates that incorrect handling may cause hazardous conditions, resulting in death or severe injury.
⚠CAUTION	Indicates that incorrect handling may cause hazardous conditions, resulting in medium or slight personal injury or physical damage.

Depending on circumstances, procedures indicated by ⚠CAUTION may also be linked to serious results.
In any case, it is important to follow the directions for usage.

Associated Manuals

Manual name	Manual No.	Description
FX3G Series User's Manual - Hardware Edition	JY997D31301	Explains FX3G Series PLC specification details for I/O, wiring, installation, and maintenance.
FX3U Series User's Manual - Hardware Edition	JY997D16501	Explains FX3U Series PLC specification details for I/O, wiring, installation, and maintenance.
FX3UC Series User's Manual - Hardware Edition	JY997D28701	Explains FX3UC Series PLC specification details for I/O, wiring, installation, and maintenance.
FX2N HARDWARE MANUAL	JY992D66301	Explains FX2N Series PLC specification details for I/O, wiring, installation, and maintenance.
FX2NC (D/UL) HARDWARE MANUAL	JY992D87201	Explains FX2NC (D/UL) Series PLC specification details for I/O, wiring, installation, and maintenance.
FX2NC (DSS/DS) HARDWARE MANUAL	JY992D76401	Explains FX2NC (DSS/DS) Series PLC specification details for I/O, wiring, installation, and maintenance.
FX1N HARDWARE MANUAL	JY992D89301	Explains FX1N Series PLC specification details for I/O, wiring, installation, and maintenance.

How to obtain manuals
For the necessary product manuals or documents, consult with the Mitsubishi Electric dealer from where you purchase your product.

Certification of UL, cUL standards

FX2N-8EYR-S-ES/UL units comply with the UL standards (UL, cUL).
UL, cUL File Number: E95239
Regarding the standards that comply with the main unit, please refer to either the FX series product catalog or consult with your nearest Mitsubishi product provider.

Compliance with EC directive (CE Marking)

This product complies with EC directive, however, this document does not guarantee that a mechanical system including this product will comply with EC directive.
Compliance to EMC directive and LVD directive for the entire mechanical module should be checked by the user/manufacturer. For more information please consult with your nearest Mitsubishi product provider.

Caution for EC Directive

- Please use the programmable controllers while installed in conductive shielded control panels under a general industrial environment.
- Programmable controllers are open-type devices that must be installed and used within conductive control panels. Please secure the control box lid to the control box (for conduction). Installation within a control box greatly affects the safety of the system and aids in shielding noise from the programmable controller.
- For the control panel, use the product having sufficient strength, fire protectiveness and shielding property to an installation environment.
- 24 V DC of the power supply must be supplied from the circuit double/reinforced insulated from the main power supply (MAINS).

Caution for compliance with the LVD directive (EN61010-2-201:2013)*1

- To an external connection port other than AC power supply terminal and AC input/output terminal, connect the circuit separated from a dangerous voltage by a double/reinforced insulation.
- Between the commons having the adjacent relay output terminals, if an external power supply is higher than 120 V AC, the insulation is basic. Therefore, when using 120 V AC or higher external power supply and 30 V DC/AC or lower external power supply between the adjacent commons, do not handle 30 V DC/AC or lower external power supply as a touchable part, (When handling 30 V DC/AC or lower external power supply as a touchable part, add a basic insulation.)
- Do not wire two or more crimp terminals to one terminal. (If the wiring with two or more wires is needed, take an appropriate action such as adding an external terminal.)
- For crimp terminals to be used for the wiring applied with 30 V AC or higher, use the products with insulating sleeves.
- Cutoff device such as a breaker or a circuit protector should be installed in accordance with the following precautions.
  - Use EN60947-1 or EN60947-3 standards.
  - Place the cutoff device so that it can be operated easily.
  - Specify that the cutoff device is for this equipment.

*1 For the time of compliance with the LVD directive (EN61010-2-201:2013), refer to the manual of the PLC to be connected.

1. Outline

1.1 Outline

The FX2N-8EYR-S-ES/UL output extension block (hereinafter called FX2N-8EYR-S-ES/UL) is a extension block to connect the FX3G/FX3U/FX3UC/FX2N/FX2NC/FX1N/FX1NC Series main units.
FX2N-8EYR-S-ES/UL has 8 points relay outputs, and all output terminals have separate reference terminals (Commons).

1.2 Communication Function

Check if the following product and items are included in the package:

Included Items	
FX2N-8EYR-S-ES/UL	1 unit
Input/output number label	1 sheet
Dust proof protection sheet	1 sheet
Manuals (Japanese version, English version)	1 manual each

1.3 External Dimensions, Part Names

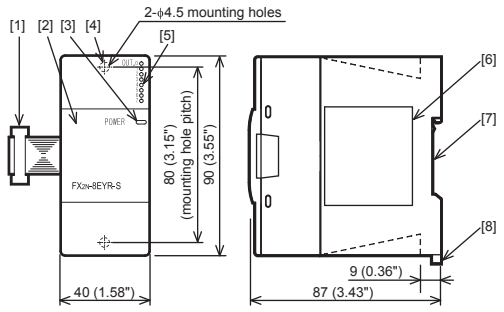

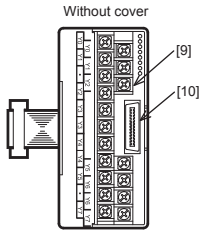

Unit: mm (inches)
MASS (weight): Approx. 0.3 kg (0.66 lbs)

No.	Name
[1]	Extension cable
[2]	Top cover
[3]	Power LED
[4]	Direct mounting hole (mounting screw: M4 screw)
[5]	Output LED
[6]	Nameplate
[7]	DIN rail mounting groove (DIN rail: DIN46277, 35mm (1.38") width)
[8]	DIN rail mounting hook
[9]	Output terminal block (M3 terminal screw)
[10]	Extension connector

2. General specifications and Installation

DESIGN PRECAUTIONS ⚠WARNING

- Make sure to have the following safety circuits outside the PLC to ensure safe system operation even during external power supply problems or PLC failure.
  Otherwise, malfunctions may cause serious accidents.
  1) Most importantly, have the following: an emergency stop circuit, a protection circuit, an interlock circuit for opposite movements (such as normal vs. reverse rotation), and an interlock circuit (to prevent damage to the equipment at the upper and lower positioning limits).
  2) Note that when the PLC CPU detects an error, such as a watchdog timer error, during self-diagnosis, all outputs are turned off. Also, when an error that cannot be detected by the PLC CPU occurs in an input/output control block, output control may be disabled.
  External circuits and mechanisms should be designed to ensure safe machinery operation in such a case.
  3) Note that when an error occurs in a relay output device, the output could be held either on or off.
  For output signals that may lead to serious accidents, external circuits and mechanisms should be designed to ensure safe machinery operation in such a case.

DESIGN PRECAUTIONS ⚠CAUTION

- Do not bundle the control line together with or lay it close to the main circuit or power line. As a guideline, lay the control line at least 100mm (3.94") or more away from the main circuit or power line.
  Noise may cause malfunctions.
- Install module so that excessive force will not be applied to the terminal blocks.
  Failure to do so may result in wire damage/breakage or PLC failure.

INSTALLATION PRECAUTIONS ⚠WARNING

- Make sure to cut off all phases of the power supply externally before attempting installation or wiring work.
  Failure to do so may cause electric shock or damage to the product.

INSTALLATION PRECAUTIONS ⚠CAUTION

- Use the product within the generic environment specifications described in PLC main unit manual (Hardware Edition).
  Never use the product in areas with excessive dust, oily smoke, conductive dusts, corrosive gas (salt air, Cl_2, H_2S, SO_2, or NO_2), flammable gas, vibration or impacts, or expose it to high temperature, condensation, or rain and wind.
  If the product is used in such conditions, electric shock, fire, malfunctions, deterioration or damage may occur.
- Do not touch the conductive parts of the product directly.
  Doing so may cause device failures or malfunctions.
- Install the product securely using a DIN rail or mounting screws.
- Install the product on a flat surface.
  If the mounting surface is rough, undue force will be applied to the PC board, thereby causing nonconformities.
- When drilling screw holes or wiring, make sure that cutting and wiring debris do not enter the ventilation slits of the PLC.
  Failure to do so may cause fire, equipment failures or malfunctions.
- Be sure to remove the dust proof sheet from the PLC's ventilation slits port when installation work is completed.
  Failure to do so may cause fire, equipment failures or malfunctions.
- Connect the extension cables securely to their designated connectors.
  Loose connections may cause malfunctions.

Notes

- When a dust proof sheet is supplied with module, keep the sheet applied to the ventilation slits during installation and wiring work.
- To prevent temperature rise, do not install the PLC on a floor, a ceiling or a vertical surface. Install it horizontally on a wall.
- Keep a space of 50 mm or more between the module main body and another device or structure. Install the module as far away as possible from high-voltage lines, high-voltage devices and power equipment.
  Failure to do so may cause fire, equipment failures or malfunctions.

2.1 General specifications

The general specifications are equivalent to the PLC main unit.
→ **For general specifications, refer to the manual of the PLC main unit.**

2.2 Installation

The product is mounted by the following method.

- DIN rail mounting
- Direct mounting (mounting screw: M4 screw)

For details, refer to the respective PLC manual.

3. Power supply/output specifications and examples of external wiring

WIRING PRECAUTIONS ⚠WARNING

- Make sure to cut off all phases of the power supply externally before attempting installation or wiring work.
  Failure to do so may cause electric shock or damage to the product.

WIRING PRECAUTIONS ⚠CAUTION

- When drilling screw holes or wiring, make sure cutting or wire debris does not enter the ventilation slits.
  Failure to do so may cause fire, equipment failures or malfunctions.
- Do not wire vacant terminals externally.
  Doing so may damage the product.
- Make sure to properly wire to the terminal blocks in accordance with the following precautions.
  Failure to do so may cause electric shock, equipment failures, a short-circuit, wire breakage, malfunctions, or damage to the product.
  - The disposal size of the cable end should follow the dimensions described in the manual
  - Tightening torque should follow the specifications in the manual
  - Tighten the screws using a Phillips-head screwdriver No.2 (shaft diameter 6 mm (0.24") or less). Make sure that the screwdriver does not touch the partition part of the terminal block.

STARTUP AND MAINTENANCE PRECAUTIONS ⚠CAUTION

- Do not disassemble or modify the PLC.
  Doing so may cause fire, equipment failures, or malfunctions.
  * For repair, contact your local Mitsubishi Electric representative.
- Do not drop the product or exert strong impact to it.
  Doing so may cause damage.
- Do not use the chemicals for cleaning.
- If there is the possibility of touching the PLC inside a control panel in maintenance, make sure to discharge to avoid the influence of static electricity.

DISPOSAL PRECAUTIONS ⚠CAUTION

- Please contact a certified electronic waste disposal company for the environmentally safe recycling and disposal of your device.

TRANSPORTATION AND STORAGE PRECAUTIONS ⚠CAUTION

- The product is a precision instrument. During transportation, avoid impacts larger than those specified in the general specifications by using dedicated packaging boxes and shock-absorbing palettes.
  Failure to do so may cause failures in the product.
  After transportation, verify operation of the product and check for damage of the mounting part, etc.

3.1 Wiring

3.1.1 Cable end treatment and tightening torque

For the terminals of FX2N-8EYR-S-ES/UL, M3 screws are used.
The electric wire ends should be treated as shown below.
Tighten the screws to a torque of 0.5 to 0.8 N•m
Do not tighten terminal screws with a torque outside the above-mentioned range.
Failure to do so may cause equipment failures or malfunctions.

- When one wire is connected to one terminal

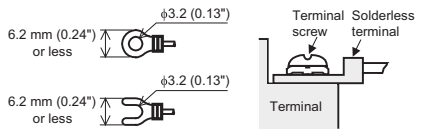

<Reference>

Terminal manufacturer	Type No.	Applicable cable	Certification	Pressure bonding tool
J.S.T. Mfg. Co., Ltd.	FV1.25-B3A	AWG22 to 16	UL Listed	YA-1 (J.S.T. Mfg. Co., Ltd.)
	FV2-MS3	AWG16 to 14		

- When two wires are connected to one terminal*1

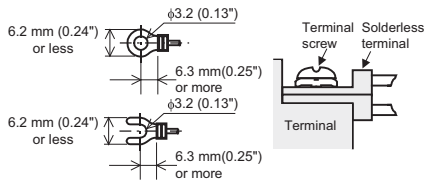

<Reference>

Terminal manufacturer	Type No.	Applicable cable	Certification	Pressure bonding tool
J.S.T. Mfg. Co., Ltd.	FV1.25-B3A	AWG22 to 16	UL Listed	YA-1 (J.S.T. Mfg. Co., Ltd.)

*1 To adapt the LVD directive (EN61010-2-201:2013) of the EC directive, avoid the wiring with two wires to the built-in terminal, and take an appropriate action such as adding an external terminal.
For the time of compliance with the LVD directive (EN61010-2-201:2013), refer to the manual of the PLC to be connected.

3.2 Power supply specifications

Item	Specifications
Internal 24V DC*1	24V DC 75mA 24V DC power is either supplied internally from the main unit or input/output extension unit, or from an extension power supply unit.
5V DC*1	5V DC 30mA 5V DC power is either supplied internally from the main unit or input/output extension unit, or from an extension power supply unit.

*1 For details on power supply connections, refer to the respective PLC manual. Power supply specification is the same as the FX2N-8EYR(-ES/UL). When there is not a description in the PLC manual, please select in the same way as the FX2N-8EYR(-ES/UL).

3.3 Output specifications and example of external wiring

3.3.1 Relay output specifications

Item		Output specifications
Number of output points		8 points (All points have separate reference terminals (Commons))
Output connecting type		Terminal block
Output form		Relay
External power supply		30V DC or less, 240V AC or less (Between 250V and 240V CE, UL, and cUL are not compliant.)
Max. load	Resistance load	2A/1point
	Inductive load	80VA/1point
Min. load		5V DC, 2mA (reference value)
Open circuit leakage current		-
Response time	OFF→ON	Approx. 10ms
	ON→OFF	
Circuit insulation		Mechanical insulation
Display of output operation		LED lights when power is applied to relay coil.

3.3.2 Example of relay output wiring

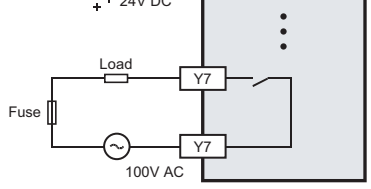

4. Terminal layouts

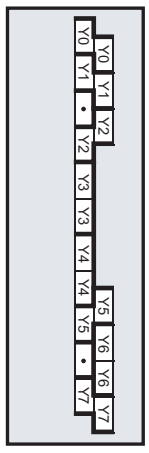

「电器电子产品有害物质限制使用标识要求」的表示方式

15 产品正常使用终结废弃时，有关电子信息产品的回收，再利用等要遵守各自治体的法律法规的要求。
Note: This symbol mark is for China only.

含有有害10物质的名称，含有量，含有部品
本产品中所含有的有害10物质的名称，含有量，含有部品如下表所示。

产品中有害物质的名称及含信息表

部件名称	有害物质					
	铅（Pb）	汞（Hg）	镉（Cd）	六价铬（Cr(VI)）	多溴联苯（PBBs）	多溴二苯醚（PBDEs）
外壳	○	○	○	○	○	○
印刷基板	×	○	○	○	○	○

部件名称	有害物质			
	邻苯二甲酸二正丁酯（DBP）	邻苯二甲酸二异丁酯（DIBP）	邻苯二甲酸丁苄酯（BBP）	邻苯二甲酸二(2-乙基)己酯（DEHP）
外壳	○	○	○	○
印刷基板	○	○	○	○

注1 ○:表示该有害物质在该部件所有均质材料中的含量均不超出电器电子产品有害物质限制使用国家标准要求。
×:表示该有害物质至少在该部件的某一均质材料中的含量超出电器电子产品有害物质限制使用国家标准要求。
注2 以上未列出的部件，表明其有害物质含量均不超出电器电子产品有害物质限制使用国家标准要求。
基于中国标准法的参考规格:GB/T15969.2

This manual confers no industrial property rights or any rights of any other kind, nor does it confer any patent licenses. Mitsubishi Electric Corporation cannot be held responsible for any problems involving industrial property rights which may occur as a result of using the contents noted in this manual.

Warranty
Exclusion of loss in opportunity and secondary loss from warranty liability
Regardless of the gratis warranty term, Mitsubishi shall not be liable for compensation to:
(1) Damages caused by any cause found not to be the responsibility of Mitsubishi.
(2) Loss in opportunity, lost profits incurred to the user by Failures of Mitsubishi products.
(3) Special damages and secondary damages whether foreseeable or not, compensation for accidents, and compensation for damages to products other than Mitsubishi products.
(4) Replacement by the user, maintenance of on-site equipment, start-up test run and other tasks.

⚠ For safe use

- This product has been manufactured as a general-purpose part for general industries, and has not been designed or manufactured to be incorporated in a device or system used in purposes related to human life.
- Before using the product for special purposes such as nuclear power, electric power, aerospace, medicine or passenger movement vehicles, consult with Mitsubishi Electric.
- This product has been manufactured under strict quality control. However when installing the product where major accidents or losses could occur if the product fails, install appropriate backup or failsafe functions in the system.

MITSUBISHI ELECTRIC CORPORATION
HEAD OFFICE : TOKYO BUILDING, 2-7-3 MARUNOUCHI, CHIYODA-KU, TOKYO 100-8310, JAPAN